Data sheet acquired from Harris Semiconductor
SCHS199C

February 1998 - Revised August 2004

High-Speed CMOS Logic Quad Bilateral Switch

Features

- **Wide Analog-Input-Voltage Range . . . . . 0V to 10V**
- **Low "ON" Resistance**
  - **45Ω (Typ) . . . . . V_{CC} = 4.5V**
  - **35Ω (Typ) . . . . . V_{CC} = 6V**
  - **30Ω (Typ) . . . . . 1fcV_{CC} = 9V**
- **Fast Switching and Propagation Delay Times**
- **Low "OFF" Leakage Current**
- **Built-In "Break-Before-Make" Switching**
- **Suitable for Sample and Hold Applications**
- **Wide Operating Temperature Range . . . -55°C to 125°C**
- **HC Types**
  - **2V to 10V Operation**
  - **High Noise Immunity: N_{IL} = 30%, N_{IH} = 30% of V_{CC} at V_{CC} = 5V**

Description

The CD74HC4016 contains four independent digitally controlled analog switches that use silicon-gate CMOS technology to achieve operating speeds similar to LSTTL with the low power consumption of standard CMOS integrated circuits.

Each switch has two input/output terminals (nY, nZ) and an active high enable input (nE). Current through the switch will not cause additional V_{CC} current provided the analog voltage is maintained between V_{CC} and GND.

Ordering Information

PART NUMBER	TEMP. RANGE (°C)	PACKAGE
CD74HC4016E	-55 to 125	14 Ld PDIP
CD74HC4016M	-55 to 125	14 Ld SOIC
CD74HC4016MT	-55 to 125	14 Ld SOIC
CD74HC4016M96	-55 to 125	14 Ld SOIC
CD74HC4016PW	-55 to 125	14 Ld TSSOP
CD74HC4016PWR	-55 to 125	14 Ld TSSOP

NOTE: When ordering, use the entire part number. The suffix 96 denotes tape and reel. The suffix T denotes a small-quantity reel of 250.

Pinout

CD74HC4016
(PDIP, SOIC, TSSOP)
TOP VIEW

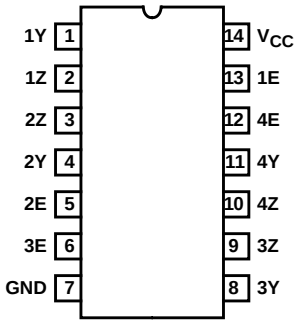

CAUTION: These devices are sensitive to electrostatic discharge. Users should follow proper IC Handling Procedures.

Copyright © 2004, Texas Instruments Incorporated

Functional Diagram

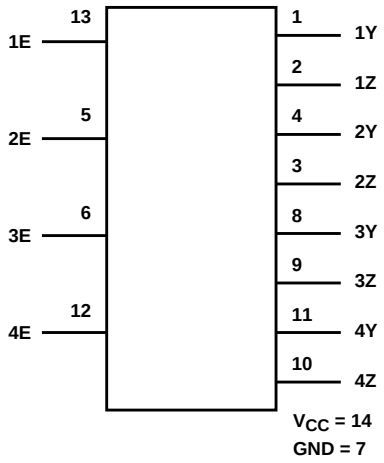

TRUTH TABLE

INPUT nE	SWITCH
L	OFF
H	ON

H = High Level Voltage
L = Low Level Voltage

Logic Diagram

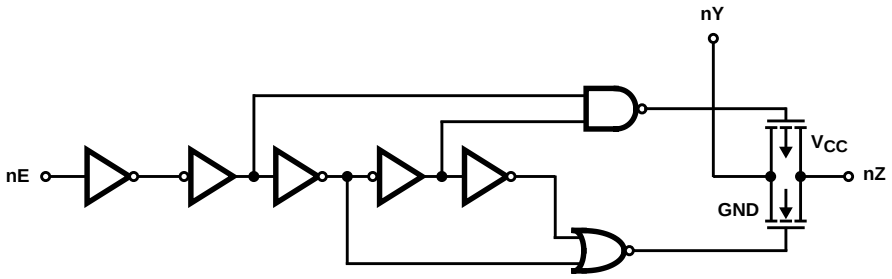

Absolute Maximum Ratings

DC Supply Voltage, V_{CC} . . . . . -0.5V to 7V
DC Input Diode Current, I_{IK}
For V_I < -0.5V or V_I > V_{CC} + 0.5V . . . . . ±20mA
DC Drain Current, per Output, I_O
For -0.5V < V_O < V_{CC} + 0.5V . . . . . ±25mA
DC Output Diode Current, I_{OK}
For V_O < -0.5V or V_O > V_{CC} + 0.5V . . . . . ±20mA
DC Output Source or Sink Current per Output Pin, I_O
For V_O > -0.5V or V_O < V_{CC} + 0.5V . . . . . ±25mA
DC V_{CC} or Ground Current, I_{CC} . . . . . ±50mA

Operating Conditions

Temperature Range, T_A . . . . . -55°C to 125°C
Supply Voltage Range, V_{CC}
HC Types . . . . . 2V to 10V
DC Input or Output Voltage, V_I, V_O . . . . . 0V to V_{CC}
Input Rise and Fall Time
2V . . . . . 1000ns (Max)
4.5V. . . . . 500ns (Max)
6V . . . . . 400ns (Max)
9V . . . . . 250ns (Max)

Thermal Information

Thermal Resistance (Typical, Note 1) θ_{JA} (^{o}C/W)
E (PDIP) Package 80
M (SOIC) Package. 86
PW (TSSOP) Package 96
Maximum Junction Temperature (Plastic Package) . . . . . 150°C
Maximum Storage Temperature Range . . . . . -65°C to 150°C
Maximum Lead Temperature (Soldering 10s) . . . . . 300°C

CAUTION: Stresses above those listed in "Absolute Maximum Ratings" may cause permanent damage to the device. This is a stress only rating and operation of the device at these or any other conditions above those indicated in the operational sections of this specification is not implie

NOTE:

1. The package thermal impedance is calculated in accordance with JESD 51-7.

DC Electrical Specifications

PARAMETER	SYMBOL	TEST CONDITIONS			25°C			-40°C TO 85°C		-55°C TO 125°C		UNITS
		V_I (V)	V_{IS} (V)	V_{CC} (V)	MIN	TYP	MAX	MIN	MAX	MIN	MAX	
HC TYPES												
High Level Input Voltage	V_{IH}	-	-	2	1.5	-	-	1.5	-	1.5	-	V
				4.5	3.15	-	-	3.15	-	3.15	-	V
				6	4.2	-	-	4.2	-	4.2	-	V
Low Level Input Voltage	V_{IL}	-	-	2	-	-	0.5	-	0.5	-	0.5	V
				4.5	-	-	1.35	-	1.35	-	1.35	V
				6	-	-	1.8	-	1.8	-	1.8	V
"ON" Resistance I_O = 1mA	R_{ON}	V_{IH} or V_{IL}	V_{CC} or GND	4.5	-	45	180	-	225	-	270	Ω
				6	-	35	160	-	200	-	240	Ω
				9	-	30	135	-	170	-	205	Ω
				4.5	-	85	320	-	400	-	480	Ω
				6	-	55	240	-	300	-	360	Ω
				9	-	35	170	-	215	-	255	Ω
Maximum "ON" Resistance Between Any Two Switches	ΔR_{ON}	V_{IL} or V_{IH}	V_{CC} or GND	4.5	-	10	-	-	-	-	-	Ω
				6	-	8.5	-	-	-	-	-	Ω
Switch Off Leakage Current	I_{IZ}	En = GND	V_{CC} or GND	6	-	-	±0.1	-	±1	-	±1	µA
				10	-	-	±0.1	-	±1	-	±1	µA
Logic Input Leakage Current	I_I	V_{CC} or GND	-	6	-	-	±0.1	-	±1	-	±1	µA

DC Electrical Specifications (Continued)

PARAMETER	SYMBOL	TEST CONDITIONS			25°C			-40°C TO 85°C		-55°C TO 125°C		UNITS
		V_I (V)	V_{IS} (V)	V_{CC} (V)	MIN	TYP	MAX	MIN	MAX	MIN	MAX	
Quiescent Device Current I_O = 0mA	I_{CC}	V_{CC} or GND	V_{CC} or GND	6	-	-	2	-	20	-	40	µA
				10	-	-	16	-	160	-	320	µA

Switching Specifications Input t_r, t_f = 6ns

PARAMETER	SYMBOL	TEST CONDITIONS	V_{CC} (V)	25°C			-40°C TO 85°C		-55°C TO 125°C		UNITS
				MIN	TYP	MAX	MIN	MAX	MIN	MAX	
HC TYPES											
Propagation Delay, Switch In to Switch Out	t_{PLH}, t_{PHL}	C_L = 50pF	2	-	-	60	-	75	-	90	ns
			4.5	-	-	12	-	15	-	18	ns
		C_L = 15pF	5	-	4	-	-	-	-	-	ns
		C_L = 50pF	6	-	-	10	-	13	-	15	ns
			9	-	-	8	-	10	-	12	ns
Propagation Delay, Switch Turn-On En to Out	t_{PZH}, t_{PZL}	C_L = 50pF	2	-	-	190	-	240	-	285	ns
			4.5	-	-	38	-	48	-	57	ns
		C_L = 15pF	5	-	16	-	-	-	-	-	ns
		C_L = 50pF	6	-	-	32	-	41	-	48	ns
			9	-	-	28	-	35	-	42	ns
Propagation Delay, Switch Turn-Off En to Out	t_{PHZ}, t_{PLZ}	C_L = 50pF	2	-	-	145	-	180	-	220	ns
			4.5	-	-	29	-	36	-	44	ns
		C_L = 15pF	5	-	12	-	-	-	-	-	ns
		C_L = 50pF	6	-	-	25	-	31	-	38	ns
			9	-	-	22	-	28	-	33	ns
Input Capacitance	C_I	-	-	-	-	10	-	10	-	10	pF
Power Dissipation Capacitance (Notes 2, 3)	C_{PD}	-	5	-	12	-	-	-	-	-	pF

NOTES:

2. C_{PD} is used to determine the dynamic power consumption, per package.
3. $P_D = C_{PD} V_{CC}^2 f_i + \Sigma (C_L + C_S) V_{CC}^2 f_o$ where f_i = input frequency, f_o = output frequency, C_L = output load capacitance, C_S = switch capacitance, V_{CC} = supply voltage.

Analog Channel Specifications T_A = 25°C

PARAMETER	TEST CONDITIONS	V_{CC} (V)	CD74HC4016	UNITS
Switch Frequency Response Bandwidth at -3dB Figure 3	Figure 6, Notes 4, 5	4.5	>200	MHz
Crosstalk Between Any Two Switches, Figure 4	Figure 5, Notes 5, 6	4.5	TBE	dB
Total Harmonic Distortion	1kHz, V_{IS} = 4V_{P-P} Figure 7	4, 5	0.078	%
	1kHz, V_{IS} = 8V_{P-P} Figure 7	9	0.018	%

Analog Channel Specifications $T_A = 25^oC$ (Continued)

PARAMETER	TEST CONDITIONS	V_{CC} (V)	CD74HC4016	UNITS
Control to Switch Feedthrough Noise	Figure 8	4.5	TBE	mV
		9	TBE	mV
Switch “OFF” Signal Feedthrough, Figure 4	Figure 9, Notes 5, 6	4.5	-62	dB
Switch Input Capacitance, C_S		-	5	pF

NOTES:

4. Adjust input level for 0dBm at output, f = 1MHz.
5. V_{IS} is centered at $V_{CC}/2$.
6. Adjust input for 0dBm at V_{IS}.

Typical Performance Curves

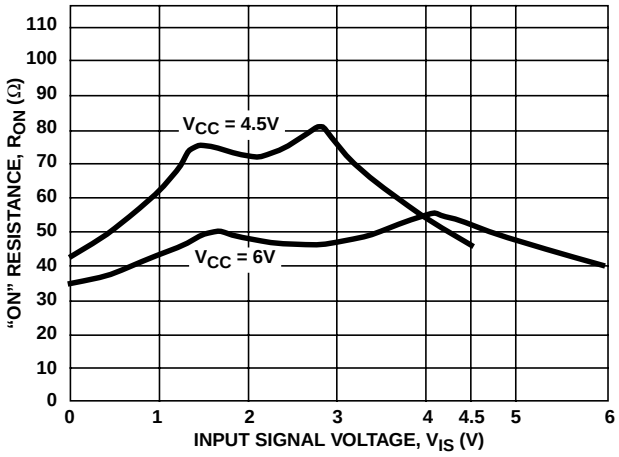

FIGURE 1. TYPICAL “ON” RESISTANCE vs INPUT SIGNAL VOLTAGE

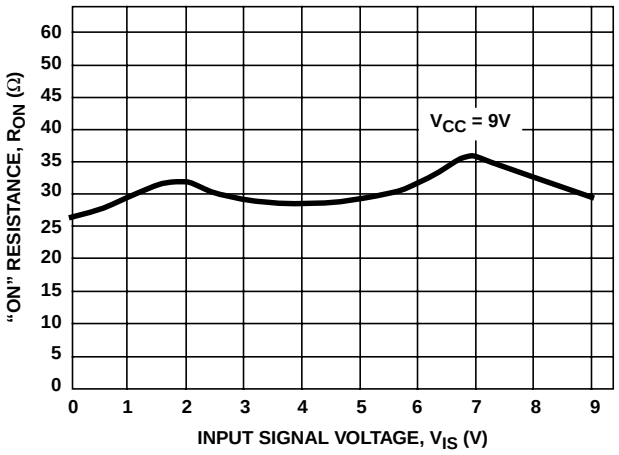

FIGURE 2. TYPICAL “ON” RESISTANCE vs INPUT SIGNAL VOLTAGE

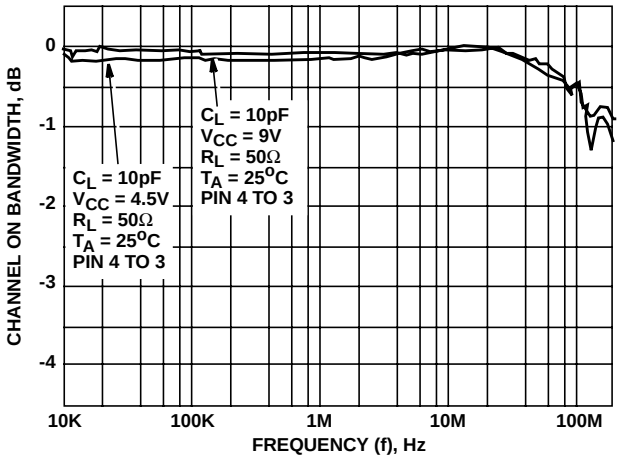

FIGURE 3. SWITCH FREQUENCY RESPONSE

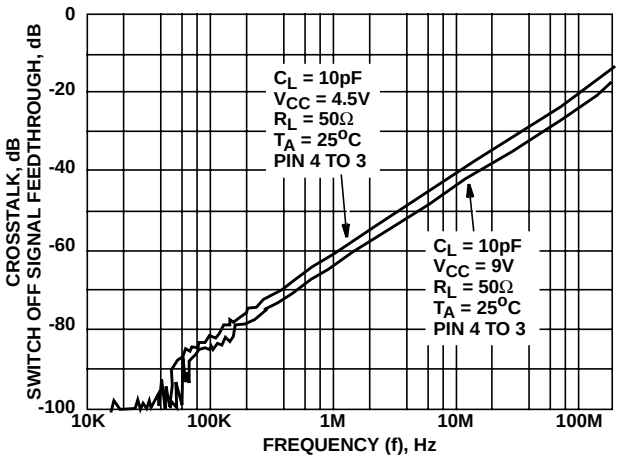

FIGURE 4. SWITCH-OFF SIGNAL FEEDTHROUGH AND CROSSTALK vs FREQUENCY

Analog Test Circuits

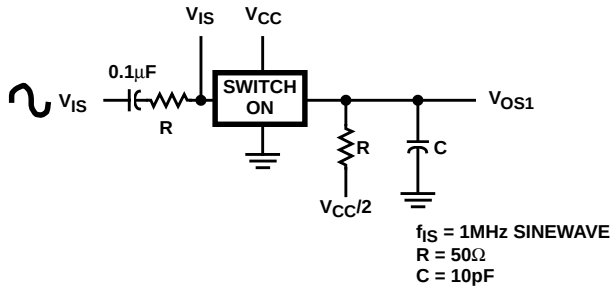

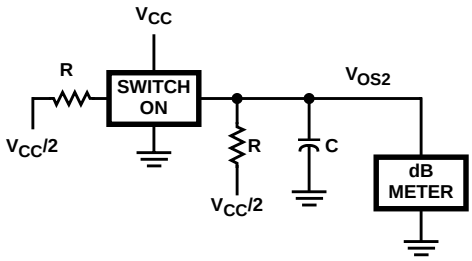

FIGURE 5. CROSSTALK BETWEEN TWO SWITCHES TEST CIRCUIT

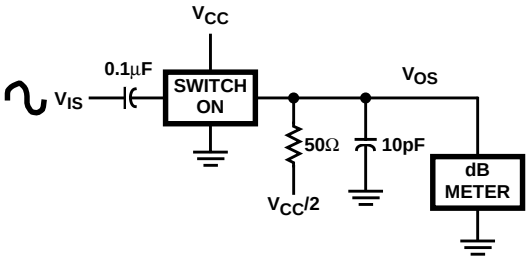

FIGURE 6. FREQUENCY RESPONSE TEST CIRCUIT

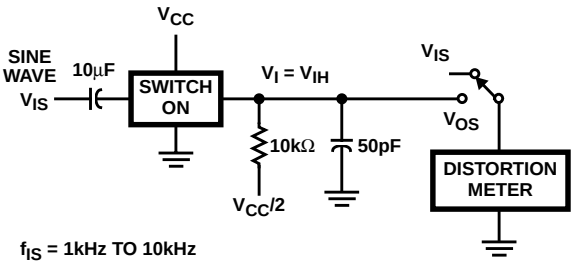

FIGURE 7. TOTAL HARMONIC DISTORTION TEST CIRCUIT

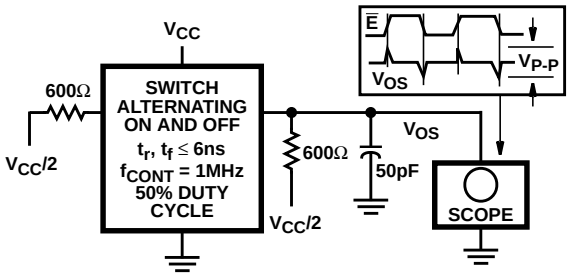

FIGURE 8. CONTROL-TO-SWITCH FEEDTHROUGH NOISE TEST CIRCUIT

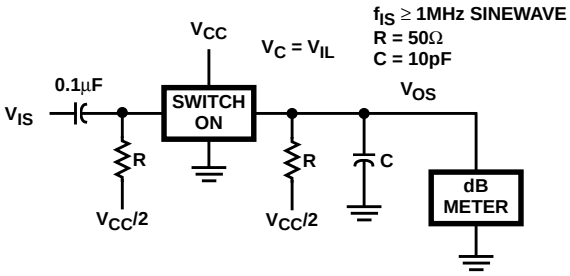

FIGURE 9. SWITCH OFF SIGNAL FEEDTHROUGH

Test Circuits and Waveforms

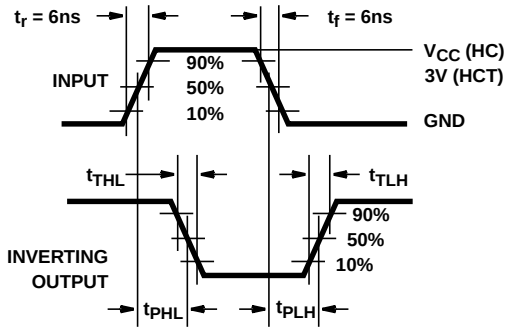

FIGURE 10. HC/HCT TRANSITION TIMES AND PROPAGATION DELAY TIMES, COMBINATION LOGIC

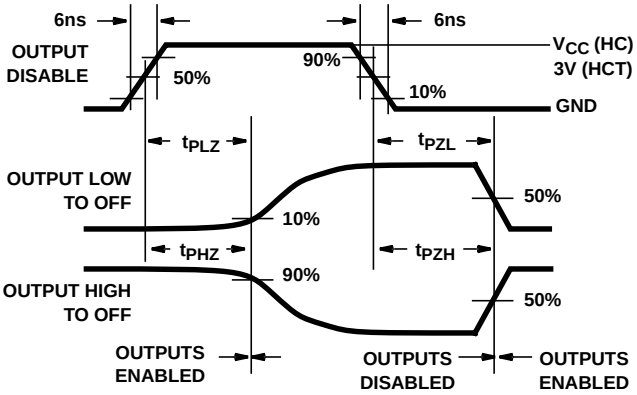

FIGURE 11. SWITCH TURN-ON AND TURN-OFF PROPAGATION DELAY TIMES

PACKAGING INFORMATION

Orderable Device	Status (1)	Package Type	Package Drawing	Pins	Package Qty	Eco Plan (2)	Lead finish/ Ball material (6)	MSL Peak Temp (3)	Op Temp (°C)	Device Marking (4/5)	Samples
CD74HC4016E	NRND	PDIP	N	14	25	RoHS & Green	NIPDAU	N / A for Pkg Type	-55 to 125	CD74HC4016E	
CD74HC4016M96	NRND	SOIC	D	14	2500	RoHS & Green	NIPDAU	Level-1-260C-UNLIM	-55 to 125	HC4016M	
CD74HC4016MT	NRND	SOIC	D	14	250	RoHS & Green	NIPDAU	Level-1-260C-UNLIM	-55 to 125	HC4016M	
CD74HC4016PW	NRND	TSSOP	PW	14	90	RoHS & Green	NIPDAU	Level-1-260C-UNLIM	-55 to 125	HP14	

(1) The marketing status values are defined as follows:
ACTIVE: Product device recommended for new designs.
LIFEBUY: TI has announced that the device will be discontinued, and a lifetime-buy period is in effect.
NRND: Not recommended for new designs. Device is in production to support existing customers, but TI does not recommend using this part in a new design.
PREVIEW: Device has been announced but is not in production. Samples may or may not be available.
OBSOLETE: TI has discontinued the production of the device.

(2) **RoHS:** TI defines "RoHS" to mean semiconductor products that are compliant with the current EU RoHS requirements for all 10 RoHS substances, including the requirement that RoHS substance do not exceed 0.1% by weight in homogeneous materials. Where designed to be soldered at high temperatures, "RoHS" products are suitable for use in specified lead-free processes. TI may reference these types of products as "Pb-Free".
RoHS Exempt: TI defines "RoHS Exempt" to mean products that contain lead but are compliant with EU RoHS pursuant to a specific EU RoHS exemption.
Green: TI defines "Green" to mean the content of Chlorine (Cl) and Bromine (Br) based flame retardants meet JS709B low halogen requirements of <=1000ppm threshold. Antimony trioxide based flame retardants must also meet the <=1000ppm threshold requirement.

(3) MSL, Peak Temp. - The Moisture Sensitivity Level rating according to the JEDEC industry standard classifications, and peak solder temperature.

(4) There may be additional marking, which relates to the logo, the lot trace code information, or the environmental category on the device.

(5) Multiple Device Markings will be inside parentheses. Only one Device Marking contained in parentheses and separated by a "~" will appear on a device. If a line is indented then it is a continuation of the previous line and the two combined represent the entire Device Marking for that device.

(6) Lead finish/Ball material - Orderable Devices may have multiple material finish options. Finish options are separated by a vertical ruled line. Lead finish/Ball material values may wrap to two lines if the finish value exceeds the maximum column width.

Important Information and Disclaimer: The information provided on this page represents TI's knowledge and belief as of the date that it is provided. TI bases its knowledge and belief on information provided by third parties, and makes no representation or warranty as to the accuracy of such information. Efforts are underway to better integrate information from third parties. TI has taken and continues to take reasonable steps to provide representative and accurate information but may not have conducted destructive testing or chemical analysis on incoming materials and chemicals. TI and TI suppliers consider certain information to be proprietary, and thus CAS numbers and other limited information may not be available for release.

In no event shall TI's liability arising out of such information exceed the total purchase price of the TI part(s) at issue in this document sold by TI to Customer on an annual basis.

TAPE AND REEL INFORMATION

REEL DIMENSIONS

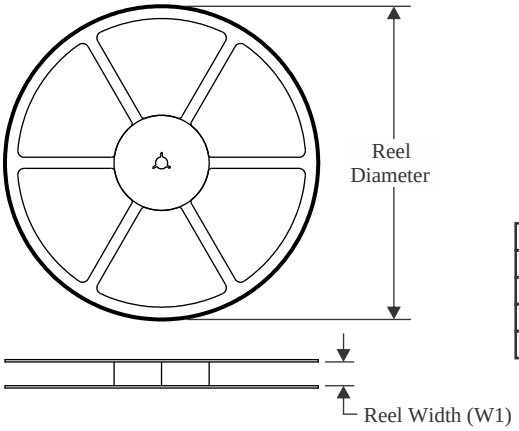

TAPE DIMENSIONS

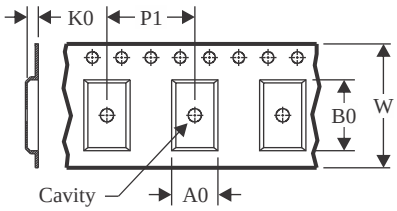

A0	Dimension designed to accommodate the component width
B0	Dimension designed to accommodate the component length
K0	Dimension designed to accommodate the component thickness
W	Overall width of the carrier tape
P1	Pitch between successive cavity centers

QUADRANT ASSIGNMENTS FOR PIN 1 ORIENTATION IN TAPE

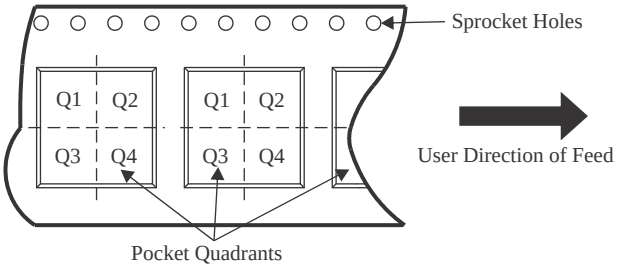

*All dimensions are nominal

Device	Package Type	Package Drawing	Pins	SPQ	Reel Diameter (mm)	Reel Width W1 (mm)	A0 (mm)	B0 (mm)	K0 (mm)	P1 (mm)	W (mm)	Pin1 Quadrant
CD74HC4016M96	SOIC	D	14	2500	330.0	16.4	6.5	9.0	2.1	8.0	16.0	Q1
CD74HC4016MT	SOIC	D	14	250	330.0	16.4	6.5	9.0	2.1	8.0	16.0	Q1

TAPE AND REEL BOX DIMENSIONS

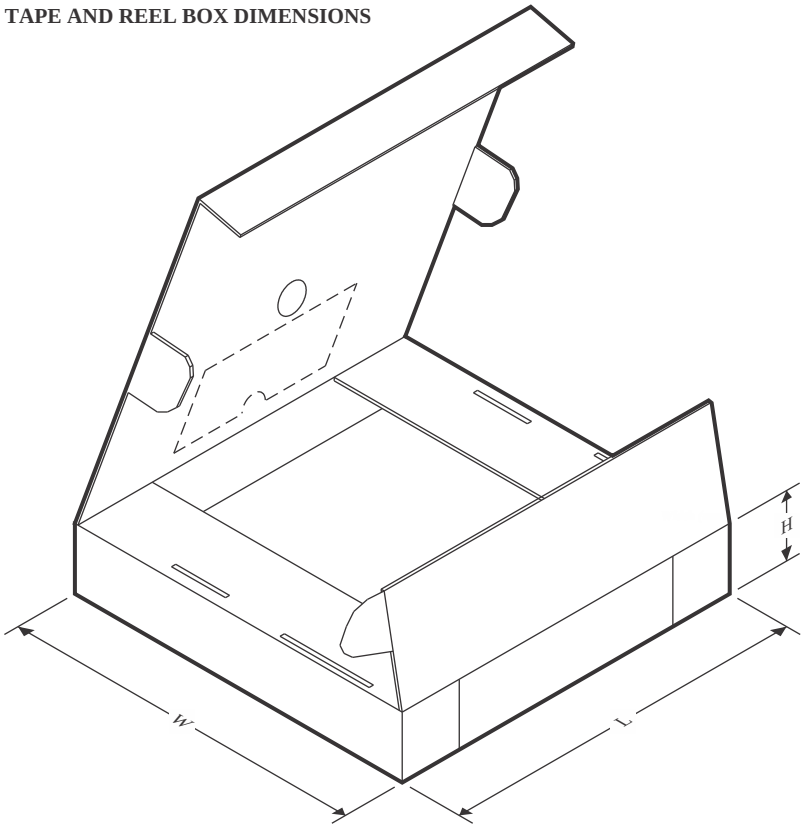

*All dimensions are nominal

Device	Package Type	Package Drawing	Pins	SPQ	Length (mm)	Width (mm)	Height (mm)
CD74HC4016M96	SOIC	D	14	2500	356.0	356.0	35.0
CD74HC4016MT	SOIC	D	14	250	210.0	185.0	35.0

TUBE

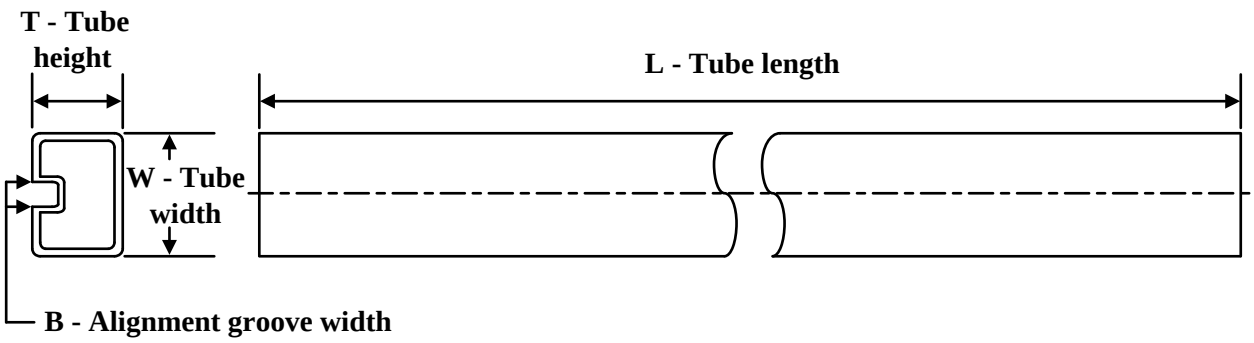

*All dimensions are nominal

Device	Package Name	Package Type	Pins	SPQ	L (mm)	W (mm)	T (µm)	B (mm)
CD74HC4016E	N	PDIP	14	25	506	13.97	11230	4.32
CD74HC4016E	N	PDIP	14	25	506	13.97	11230	4.32
CD74HC4016PW	PW	TSSOP	14	90	530	10.2	3600	3.5

N (R–PDIP–T**) PLASTIC DUAL–IN–LINE PACKAGE

16 PINS SHOWN

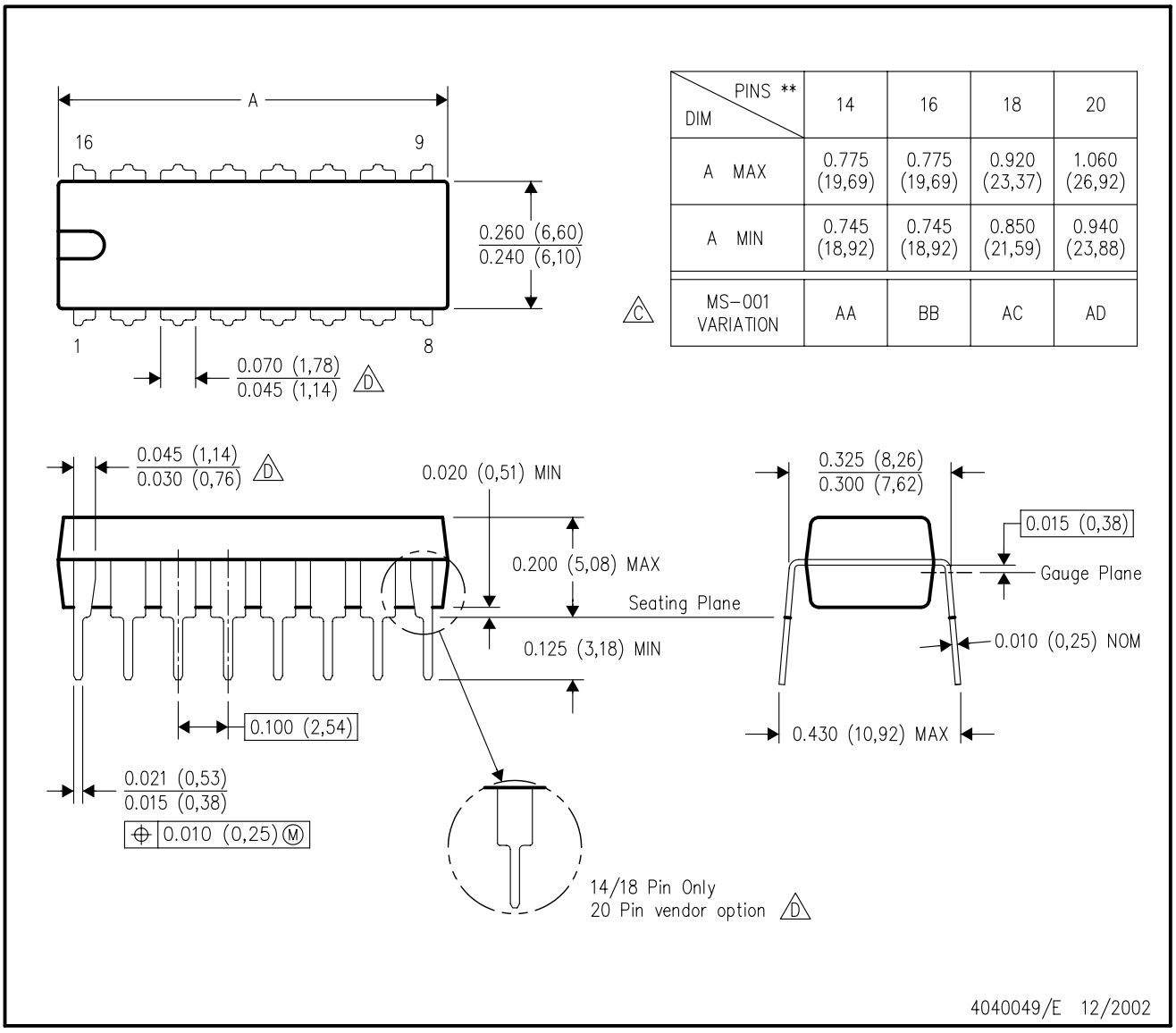

DIM \ PINS **	14	16	18	20
A MAX	0.775 (19,69)	0.775 (19,69)	0.920 (23,37)	1.060 (26,92)
A MIN	0.745 (18,92)	0.745 (18,92)	0.850 (21,59)	0.940 (23,88)
MS–001 VARIATION (C)	AA	BB	AC	AD

NOTES:
A. All linear dimensions are in inches (millimeters).
B. This drawing is subject to change without notice.
C. Falls within JEDEC MS–001, except 18 and 20 pin minimum body length (Dim A).
D. The 20 pin end lead shoulder width is a vendor option, either half or full width.

PW0014A

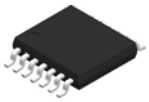

PACKAGE OUTLINE

TSSOP - 1.2 mm max height

SMALL OUTLINE PACKAGE

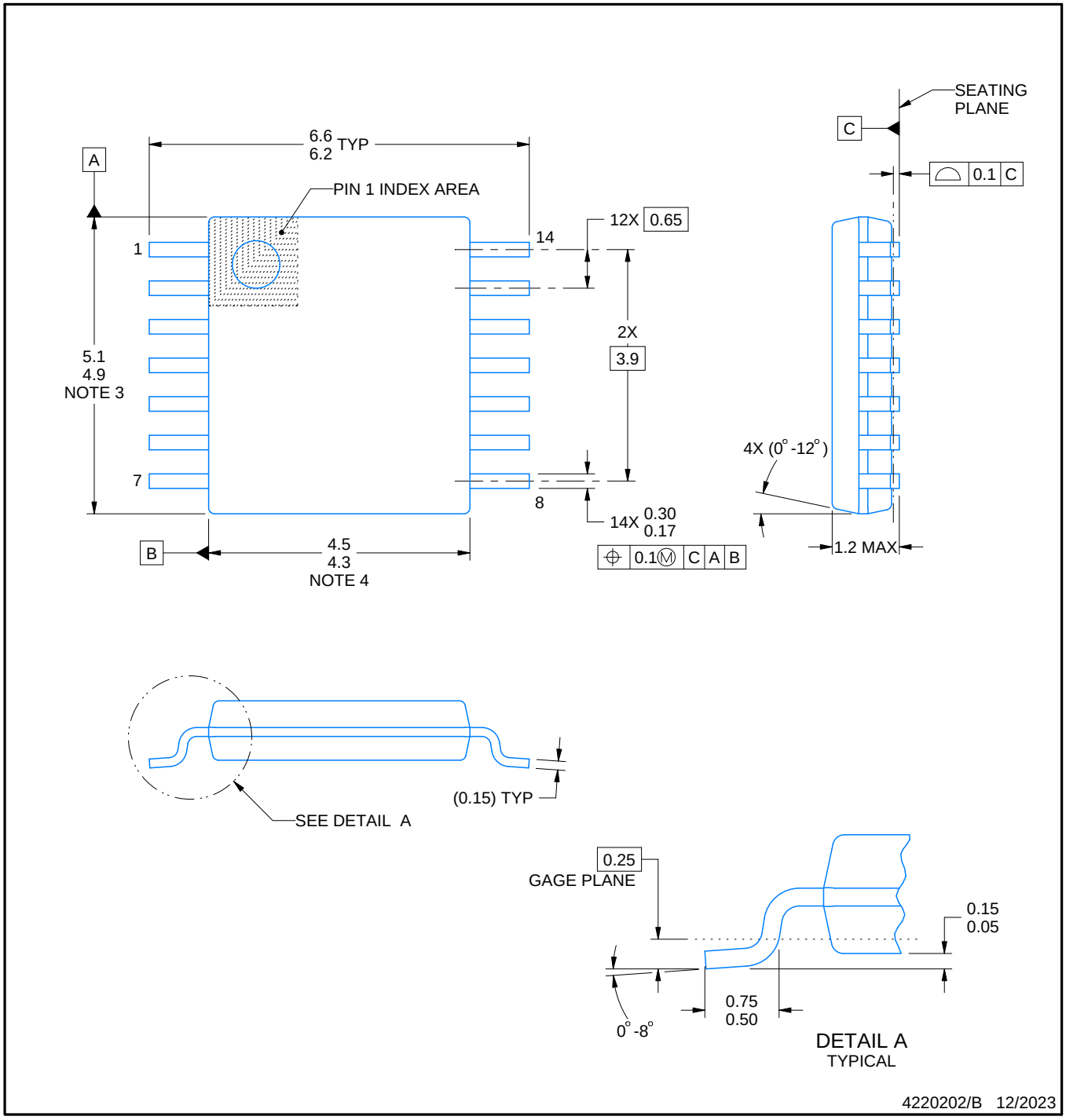

NOTES:

1. All linear dimensions are in millimeters. Any dimensions in parenthesis are for reference only. Dimensioning and tolerancing per ASME Y14.5M.
2. This drawing is subject to change without notice.
3. This dimension does not include mold flash, protrusions, or gate burrs. Mold flash, protrusions, or gate burrs shall not exceed 0.15 mm per side.
4. This dimension does not include interlead flash. Interlead flash shall not exceed 0.25 mm per side.
5. Reference JEDEC registration MO-153.

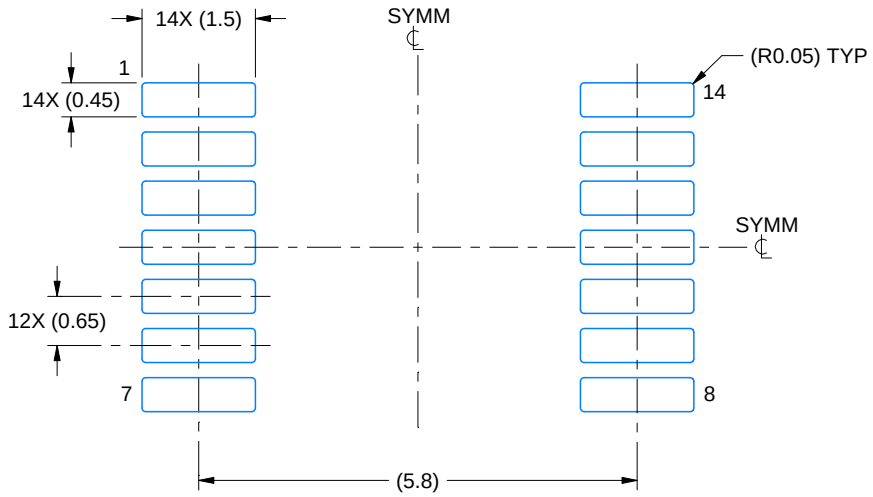

LAND PATTERN EXAMPLE
EXPOSED METAL SHOWN
SCALE: 10X

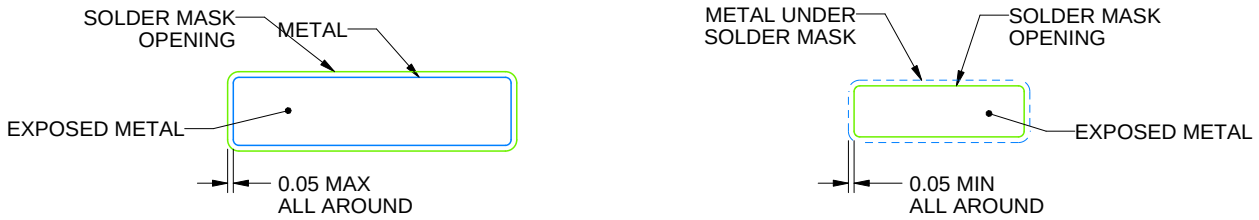

NON-SOLDER MASK DEFINED (PREFERRED)

SOLDER MASK DEFINED

SOLDER MASK DETAILS

4220202/B 12/2023

NOTES: (continued)

6. Publication IPC-7351 may have alternate designs.
7. Solder mask tolerances between and around signal pads can vary based on board fabrication site.

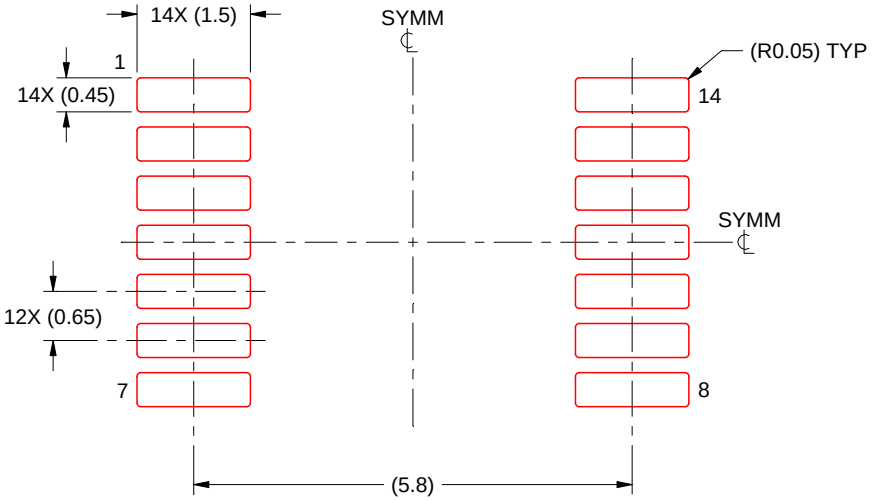

SOLDER PASTE EXAMPLE
BASED ON 0.125 mm THICK STENCIL
SCALE: 10X

4220202/B 12/2023

NOTES: (continued)

8. Laser cutting apertures with trapezoidal walls and rounded corners may offer better paste release. IPC-7525 may have alternate design recommendations.
9. Board assembly site may have different recommendations for stencil design.

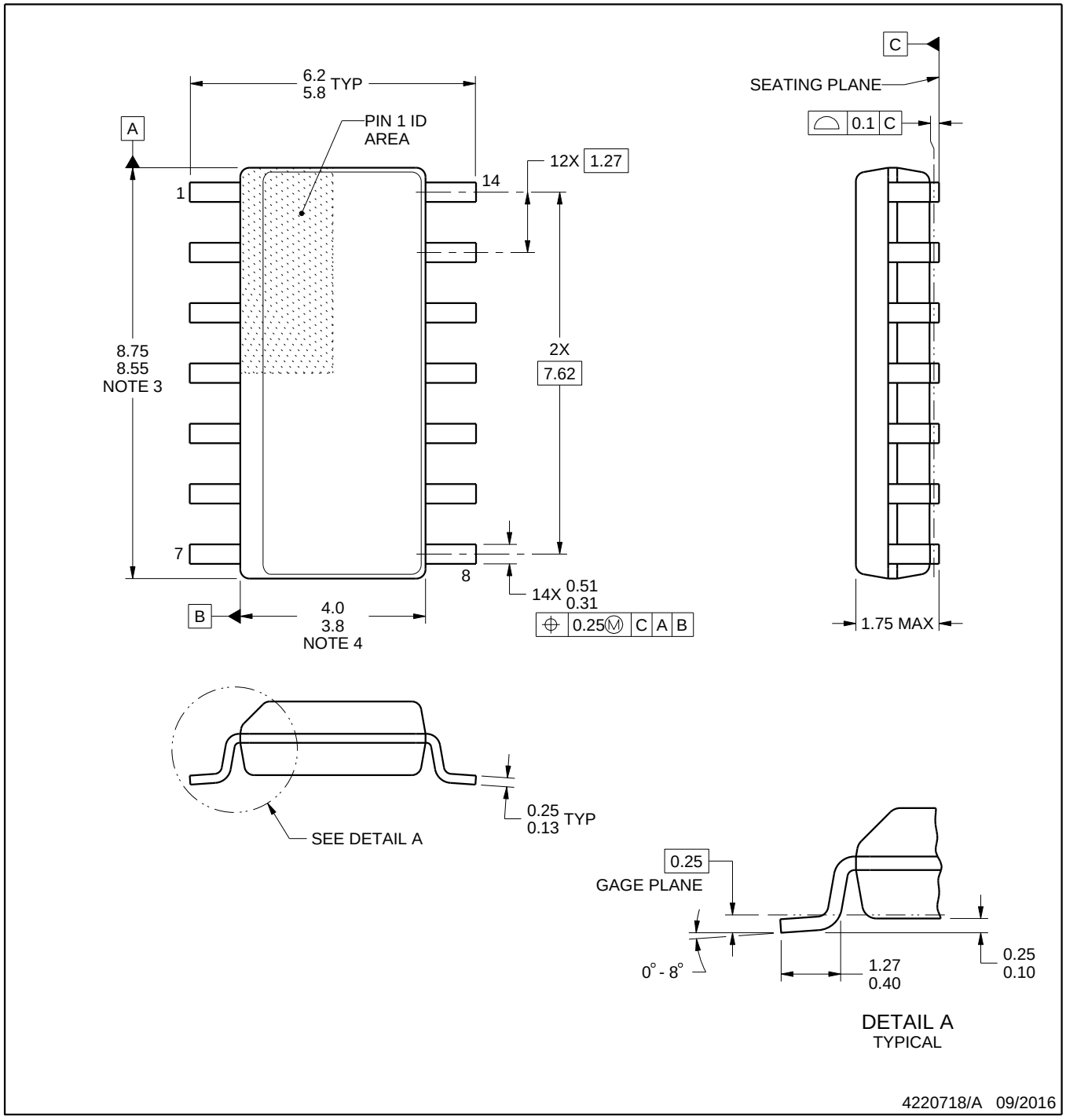

NOTES:

1. All linear dimensions are in millimeters. Dimensions in parenthesis are for reference only. Dimensioning and tolerancing per ASME Y14.5M.
2. This drawing is subject to change without notice.
3. This dimension does not include mold flash, protrusions, or gate burrs. Mold flash, protrusions, or gate burrs shall not exceed 0.15 mm, per side.
4. This dimension does not include interlead flash. Interlead flash shall not exceed 0.43 mm, per side.
5. Reference JEDEC registration MS-012, variation AB.

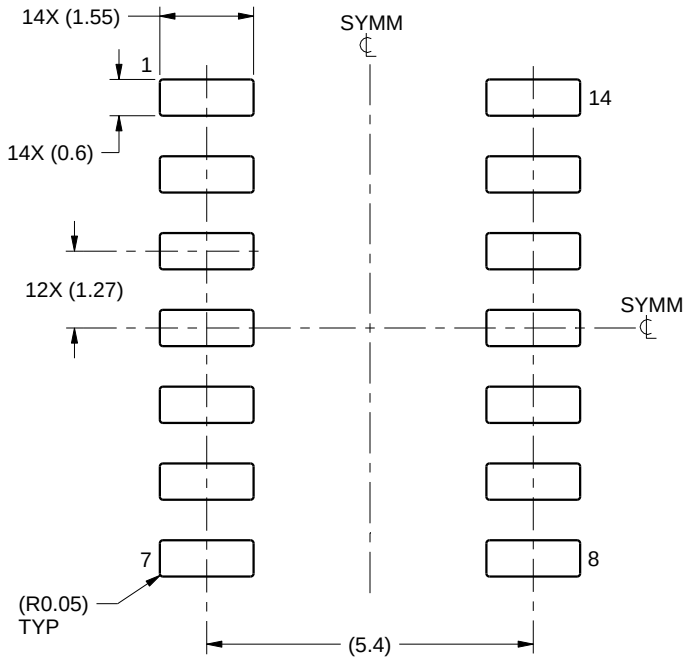

LAND PATTERN EXAMPLE
SCALE:8X

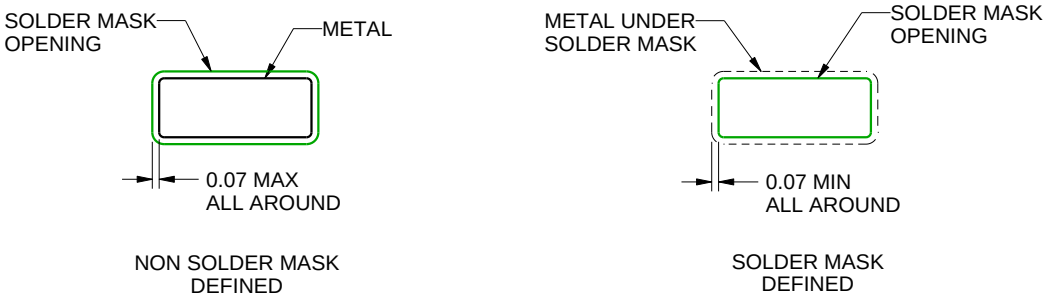

SOLDER MASK DETAILS

4220718/A 09/2016

NOTES: (continued)

6. Publication IPC-7351 may have alternate designs.
7. Solder mask tolerances between and around signal pads can vary based on board fabrication site.

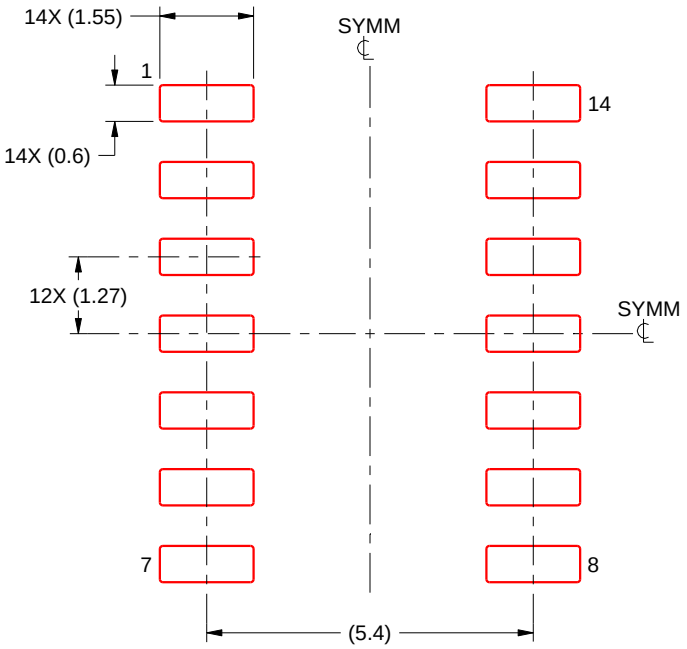

SOLDER PASTE EXAMPLE
BASED ON 0.125 mm THICK STENCIL
SCALE:8X

4220718/A 09/2016

NOTES: (continued)

8. Laser cutting apertures with trapezoidal walls and rounded corners may offer better paste release. IPC-7525 may have alternate design recommendations.
9. Board assembly site may have different recommendations for stencil design.

IMPORTANT NOTICE AND DISCLAIMER

TI PROVIDES TECHNICAL AND RELIABILITY DATA (INCLUDING DATA SHEETS), DESIGN RESOURCES (INCLUDING REFERENCE DESIGNS), APPLICATION OR OTHER DESIGN ADVICE, WEB TOOLS, SAFETY INFORMATION, AND OTHER RESOURCES “AS IS” AND WITH ALL FAULTS, AND DISCLAIMS ALL WARRANTIES, EXPRESS AND IMPLIED, INCLUDING WITHOUT LIMITATION ANY IMPLIED WARRANTIES OF MERCHANTABILITY, FITNESS FOR A PARTICULAR PURPOSE OR NON-INFRINGEMENT OF THIRD PARTY INTELLECTUAL PROPERTY RIGHTS.

These resources are intended for skilled developers designing with TI products. You are solely responsible for (1) selecting the appropriate TI products for your application, (2) designing, validating and testing your application, and (3) ensuring your application meets applicable standards, and any other safety, security, regulatory or other requirements.

These resources are subject to change without notice. TI grants you permission to use these resources only for development of an application that uses the TI products described in the resource. Other reproduction and display of these resources is prohibited. No license is granted to any other TI intellectual property right or to any third party intellectual property right. TI disclaims responsibility for, and you will fully indemnify TI and its representatives against, any claims, damages, costs, losses, and liabilities arising out of your use of these resources.

TI’s products are provided subject to TI’s Terms of Sale or other applicable terms available either on ti.com or provided in conjunction with such TI products. TI’s provision of these resources does not expand or otherwise alter TI’s applicable warranties or warranty disclaimers for TI products.

TI objects to and rejects any additional or different terms you may have proposed.

Mailing Address: Texas Instruments, Post Office Box 655303, Dallas, Texas 75265
Copyright © 2024, Texas Instruments Incorporated