SN54LS138, SN54S138, SN74LS138, SN74S138A
3-LINE TO 8-LINE DECODERS/DEMULTIPLEXERS

SDLS014

DECEMBER 1972 – REVISED MARCH 1988

- **Designed Specifically for High-Speed:**
  Memory Decoders
  Data Transmission Systems
- **3 Enable Inputs to Simplify Cascading and/or Data Reception**
- **Schottky-Clamped for High Performance**

description

These Schottky-clamped TTL MSI circuits are designed to be used in high-performance memory decoding or data-routing applications requiring very short propagation delay times. In high-performance memory systems, these docoders can be used to minimize the effects of system decoding. When employed with high-speed memories utilizing a fast enable circuit, the delay times of these decoders and the enable time of the memory are usually less than the typical access time of the memory. This means that the effective system delay introduced by the Schottky-clamped system decoder is negligible.

The 'LS138, SN54S138, and SN74S138A decode one of eight lines dependent on the conditions at the three binary select inputs and the three enable inputs. Two active-low and one active-high enable inputs reduce the need for external gates or inverters when expanding. A 24-line decoder can be implemented without external inverters and a 32-line decoder requires only one inverter. An enable input can be used as a data input for demultiplexing applications.

All of these decoder/demultiplexers feature fully buffered inputs, each of which represents only one normalized load to its driving circuit. All inputs are clamped with high-performance Schottky diodes to suppress line-ringing and to simplify system design.

The SN54LS138 and SN54S138 are characterized for operation over the full military temperature range of −55°C to 125°C. The SN74LS138 and SN74S138A are characterized for operation from 0°C to 70°C.

SN54LS138, SN54S138 . . . J OR W PACKAGE
SN74LS138, SN74S138A . . . D OR N PACKAGE
(TOP VIEW)

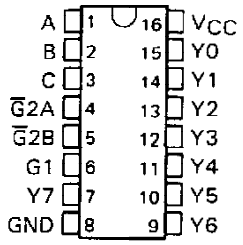

SN54LS138, SN54S138 . . . FK PACKAGE
(TOP VIEW)

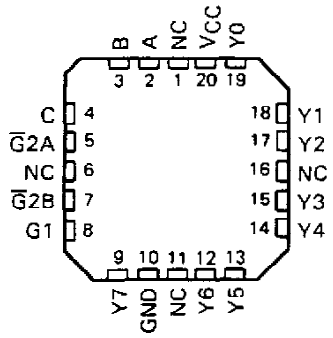

NC – No internal connection

logic symbols†

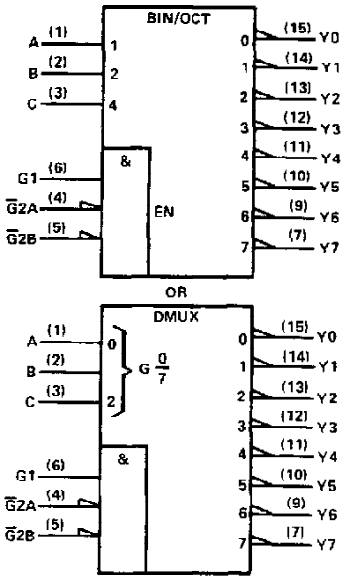

†These symbols are in accordance with ANSI/IEEE Std 91-1984 and IEC Publication 617-12.
Pin numbers shown are for D, J, N, and W packages.

PRODUCTION DATA documents contain information current as of publication date. Products conform to specifications per the terms of Texas Instruments standard warranty. Production processing does not necessarily include testing of all parameters.

Copyright © 1972, Texas Instruments Incorporated

TEXAS INSTRUMENTS
POST OFFICE BOX 655012 • DALLAS, TEXAS 75265

logic diagram and function table

'LS138, SN54S138, SN74S138A

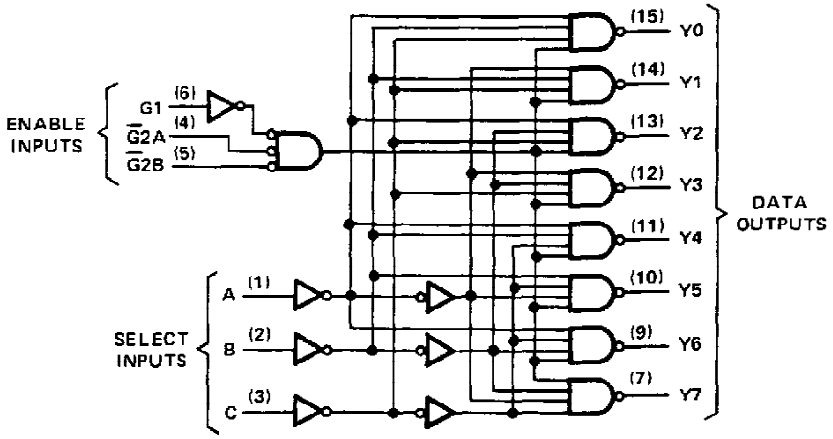

Pin numbers shown are for D, J, N, and W packages.

'LS138, SN54138, SN74S138A
FUNCTION TABLE

INPUTS					OUTPUTS							
ENABLE		SELECT										
G1	$\overline{G2}$*	C	B	A	Y0	Y1	Y2	Y3	Y4	Y5	Y6	Y7
X	H	X	X	X	H	H	H	H	H	H	H	H
L	X	X	X	X	H	H	H	H	H	H	H	H
H	L	L	L	L	L	H	H	H	H	H	H	H
H	L	L	L	H	H	L	H	H	H	H	H	H
H	L	L	H	L	H	H	L	H	H	H	H	H
H	L	L	H	H	H	H	H	L	H	H	H	H
H	L	H	L	L	H	H	H	H	L	H	H	H
H	L	H	L	H	H	H	H	H	H	L	H	H
H	L	H	H	L	H	H	H	H	H	H	L	H
H	L	H	H	H	H	H	H	H	H	H	H	L

* $\overline{G2} = \overline{G2A} + \overline{G2B}$
H = high level, L = low level, X = irrelevant

schematics of inputs and outputs

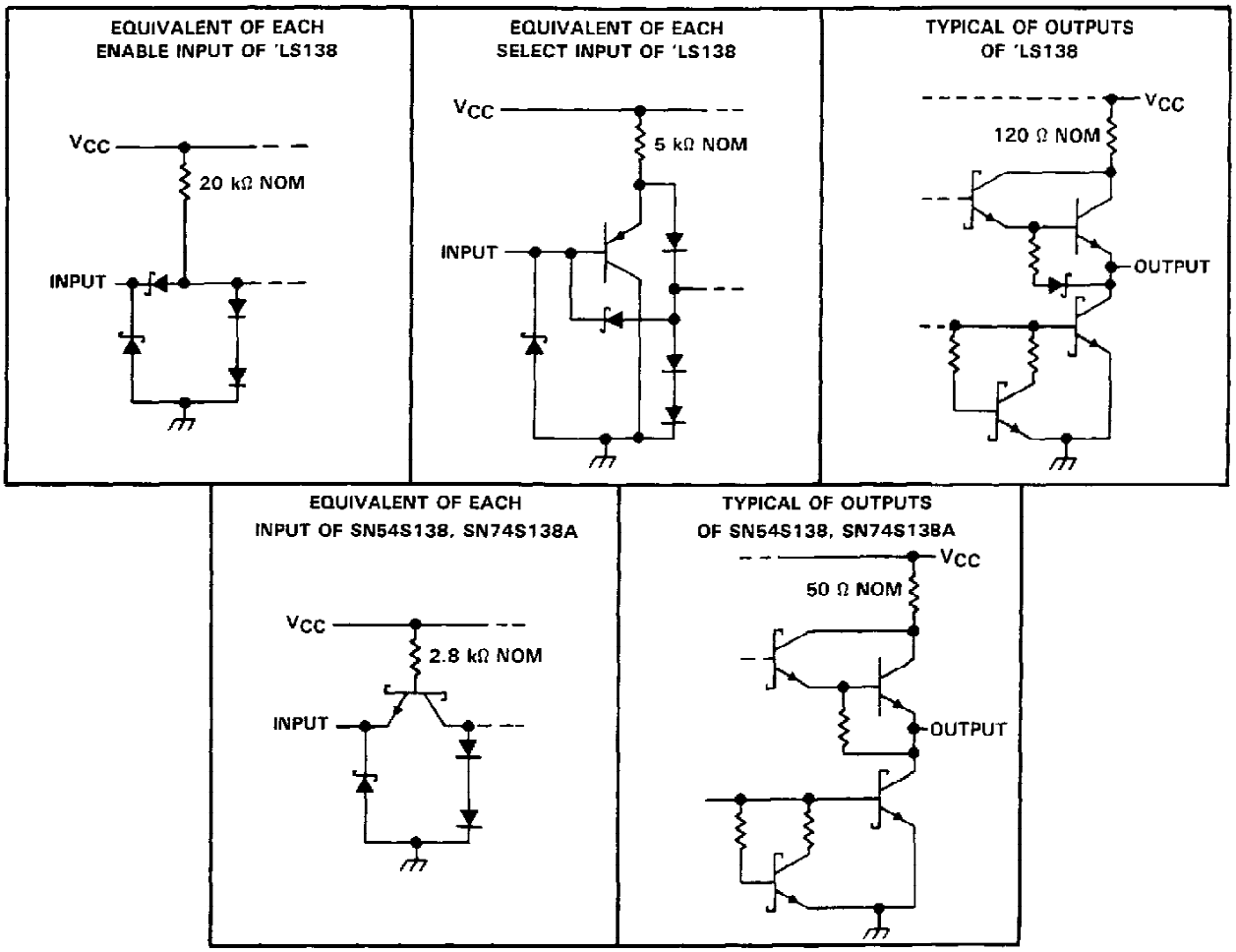

absolute maximum ratings over operating free-air temperature range (unless otherwise noted)

Supply voltage, V_{CC} (see Note 1)		7 V
Input voltage		7 V
Operating free-air temperature range:	SN54LS138, SN54S138	−55°C to 125°C
	SN74LS138, SN74S138A	0°C to 70°C
Storage temperature range		−65°C to 150°C

NOTE 1: Voltage values are with respect to network ground terminal.

recommended operating conditions

		SN54LS138			SN74LS138			UNIT
		MIN	NOM	MAX	MIN	NOM	MAX	
V_{CC}	Supply voltage	4.5	5	5.5	4.75	5	5.25	V
V_{IH}	High-level input voltage	2			2			V
V_{IL}	Low-level input voltage			0.7			0.8	V
I_{OH}	High-level output current			−0.4			−0.4	mA
I_{OL}	Low-level output current			4			8	mA
T_A	Operating free-air temperature	−55		125	0		70	°C

electrical characteristics over recommended operating free-air temperature range (unless otherwise noted)

PARAMETER	TEST CONDITIONS†		SN54LS138			SN74LS138			UNIT
			MIN	TYP‡	MAX	MIN	TYP‡	MAX	
V_{IK}	V_{CC} = MIN, I_I = −18 mA				−1.5			−1.5	V
V_{OH}	V_{CC} = MIN, V_{IH} = 2 V, V_{IL} = MAX, I_{OH} = −0.4 mA		2.5	3.4		2.7	3.4		V
V_{OL}	V_{CC} = MIN, V_{IH} = 2 V, V_{IL} = MAX	I_{OL} = 4 mA		0.25	0.4		0.25	0.4	V
		I_{OL} = 8 mA					0.35	0.5	
I_I	V_{CC} = MAX, V_I = 7 V				0.1			0.1	mA
I_{IH}	V_{CC} = MAX, V_I = 2.7 V				20			20	μA
I_{IL}	V_{CC} = MAX, V_I = 0.4 V	Enable			−0.4			−0.4	mA
		A, B, C			−0.2			−0.2	
I_{OS}§	V_{CC} = MAX		−20		100	−20		−100	mA
I_{CC}	V_{CC} = MAX, Outputs enabled and open			6.3	10		6.3	10	mA

† For conditions shown as MIN or MAX, use the appropriate value specified under recommended operating conditions.
‡ All typical values are at V_{CC} = 5 V, T_A = 25°C.
§ Not more than one output should be shorted at a time, and duration of the short-circuit test should not exceed one second.

switching characteristics, V_{CC} = 5 V, T_A = 25°C

PARAMETER¶	FROM (INPUT)	TO (OUTPUT)	LEVELS OF DELAY	TEST CONDITIONS	SN54LS138 SN74LS138			UNIT
					MIN	TYP	MAX	
t_{PLH}	Binary Select	Any	2	R_L = 2 kΩ, C_L = 15 pF, See Note 2		11	20	ns
t_{PHL}						18	41	ns
t_{PLH}			3			21	27	ns
t_{PHL}						20	39	ns
t_{PLH}	Enable	Any	2			12	18	ns
t_{PHL}						20	32	ns
t_{PLH}			3			14	26	ns
t_{PHL}						13	38	ns

¶ t_{PLH} = propagation delay time, low-to-high-level ouput
t_{PHL} = propagation delay time, high-to-low-level output
NOTE 2: Load circuits and voltage waveforms are shown in Section 1.

absolute maximum ratings over operating free-air temperature range (unless otherwise noted)

Supply voltage, V_{CC} (see Note 1) . . . . . 7 V
Input voltage . . . . . 5.5 V
Operating free-air temperature range: SN54S138 . . . . . −55°C to 125°C
SN74S138A . . . . . 0°C to 70°C
Storage temperature range . . . . . −65°C to 150°C

NOTE 1: Voltage values are with respect to network ground terminal.

recommended operating conditions

		SN54S138			SN74S138A			UNIT
		MIN	NOM	MAX	MIN	NOM	MAX	
V_{CC}	Supply voltage	4.5	5	5.5	4.75	5	5.25	V
V_{IH}	High-level input voltage	2			2			V
V_{IL}	Low-level input voltage			0.8			0.8	V
I_{OH}	High-level output current			−1			−1	mA
I_{OL}	Low-level output current			20			20	mA
T_A	Operating free-air temperature	−55		125	0		70	°C

electrical characteristics over recommended operating free-air temperature range (unless otherwise noted)

PARAMETER	TEST CONDITIONS†		SN54S138 SN74S138A MIN	TYP‡	MAX	UNIT
V_{IK}	V_{CC} = MIN, I_I = −18 mA				−1.2	V
V_{OH}	V_{CC} = MIN, V_{IH} = 2 V, V_{IL} = 0.8 V, I_{OH} = −1 mA	SN54S'	2.5	3.4		V
		SN74S'	2.7	3.4		
V_{OL}	V_{CC} = MIN, V_{IH} = 2 V, V_{IL} = 0.8 V, I_{OL} = 20 mA				0.5	V
I_I	V_{CC} = MAX, V_I = 5.5 V				1	mA
I_{IH}	V_{CC} = MAX, V_I = 2.7 V				50	μA
I_{IL}	V_{CC} = MAX, V_I = 0.5 V				−2	mA
I_{OS}§	V_{CC} = MAX		−40		−100	mA
I_{CC}	V_{CC} = MAX, Outputs enabled and open			49	74	mA

† For conditions shown as MIN or MAX, use the appropriate value specified under recommended operating conditions.
‡ All typical values are at V_{CC} = 5 V, T_A = 25°C.
§ Not more than one output should be shorted at a time, and duration of the short circuit test should not exceed one second.

switching characteristics, V_{CC} = 5 V, T_A = 25°C

PARAMETER†	FROM (INPUT)	TO (OUTPUT)	LEVELS OF DELAY	TEST CONDITIONS	SN54S138 SN74S138A			UNIT
					MIN	TYP	MAX	
t_{PLH}	Binary Select	Any	2	R_L = 280 Ω, C_L = 15 pF, See Note 2		4.5	7	ns
t_{PHL}						7	10.5	ns
t_{PLH}			3			7.5	12	ns
t_{PHL}						8	12	ns
t_{PLH}	Enable	Any	2			5	8	ns
t_{PHL}						7	11	ns
t_{PLH}			3			7	11	ns
t_{PHL}						7	11	ns

†t_{PLH} = propagation delay time, low-to-high-level output
t_{PHL} = propagation delay time, high-to-low-level output
NOTE 2: Load circuits and voltage waveforms are shown in Section 1.

PACKAGING INFORMATION

Orderable Device	Status (1)	Package Type	Package Drawing	Pins	Package Qty	Eco Plan (2)	Lead finish/ Ball material (6)	MSL Peak Temp (3)	Op Temp (°C)	Device Marking (4/5)	Samples
76005012A	ACTIVE	LCCC	FK	20	55	Non-RoHS & Green	SNPB	N / A for Pkg Type	-55 to 125	76005012A SNJ54LS 138FK	Samples
7600501EA	ACTIVE	CDIP	J	16	25	Non-RoHS & Green	SNPB	N / A for Pkg Type	-55 to 125	7600501EA SNJ54LS138J	Samples
7600501EA	ACTIVE	CDIP	J	16	25	Non-RoHS & Green	SNPB	N / A for Pkg Type	-55 to 125	7600501EA SNJ54LS138J	Samples
7600501FA	ACTIVE	CFP	W	16	25	Non-RoHS & Green	SNPB	N / A for Pkg Type	-55 to 125	7600501FA SNJ54LS138W	Samples
7600501FA	ACTIVE	CFP	W	16	25	Non-RoHS & Green	SNPB	N / A for Pkg Type	-55 to 125	7600501FA SNJ54LS138W	Samples
7604101EA	ACTIVE	CDIP	J	16	25	Non-RoHS & Green	SNPB	N / A for Pkg Type	-55 to 125	7604101EA SNJ54S138J	Samples
7604101EA	ACTIVE	CDIP	J	16	25	Non-RoHS & Green	SNPB	N / A for Pkg Type	-55 to 125	7604101EA SNJ54S138J	Samples
7604101FA	ACTIVE	CFP	W	16	25	Non-RoHS & Green	SNPB	N / A for Pkg Type	-55 to 125	7604101FA SNJ54S138W	Samples
7604101FA	ACTIVE	CFP	W	16	25	Non-RoHS & Green	SNPB	N / A for Pkg Type	-55 to 125	7604101FA SNJ54S138W	Samples
JM38510/07701BEA	ACTIVE	CDIP	J	16	25	Non-RoHS & Green	SNPB	N / A for Pkg Type	-55 to 125	JM38510/ 07701BEA	Samples
JM38510/07701BEA	ACTIVE	CDIP	J	16	25	Non-RoHS & Green	SNPB	N / A for Pkg Type	-55 to 125	JM38510/ 07701BEA	Samples
JM38510/07701BFA	ACTIVE	CFP	W	16	25	Non-RoHS & Non-Green	SNPB	N / A for Pkg Type	-55 to 125	JM38510/ 07701BFA	Samples
JM38510/07701BFA	ACTIVE	CFP	W	16	25	Non-RoHS & Non-Green	SNPB	N / A for Pkg Type	-55 to 125	JM38510/ 07701BFA	Samples
JM38510/30701B2A	ACTIVE	LCCC	FK	20	55	Non-RoHS & Green	SNPB	N / A for Pkg Type	-55 to 125	JM38510/ 30701B2A	Samples
JM38510/30701B2A	ACTIVE	LCCC	FK	20	55	Non-RoHS & Green	SNPB	N / A for Pkg Type	-55 to 125	JM38510/ 30701B2A	Samples
JM38510/30701BEA	ACTIVE	CDIP	J	16	25	Non-RoHS & Green	SNPB	N / A for Pkg Type	-55 to 125	JM38510/ 30701BEA	Samples

Orderable Device	Status (1)	Package Type	Package Drawing	Pins	Package Qty	Eco Plan (2)	Lead finish/ Ball material (6)	MSL Peak Temp (3)	Op Temp (°C)	Device Marking (4/5)	Samples
JM38510/30701BEA	ACTIVE	CDIP	J	16	25	Non-RoHS & Green	SNPB	N / A for Pkg Type	-55 to 125	JM38510/ 30701BEA	Samples
JM38510/30701BFA	ACTIVE	CFP	W	16	25	Non-RoHS & Green	SNPB	N / A for Pkg Type	-55 to 125	JM38510/ 30701BFA	Samples
JM38510/30701BFA	ACTIVE	CFP	W	16	25	Non-RoHS & Green	SNPB	N / A for Pkg Type	-55 to 125	JM38510/ 30701BFA	Samples
JM38510/30701SEA	ACTIVE	CDIP	J	16	25	Non-RoHS & Green	SNPB	N / A for Pkg Type	-55 to 125	JM38510/ 30701SEA	Samples
JM38510/30701SEA	ACTIVE	CDIP	J	16	25	Non-RoHS & Green	SNPB	N / A for Pkg Type	-55 to 125	JM38510/ 30701SEA	Samples
JM38510/30701SFA	ACTIVE	CFP	W	16	25	Non-RoHS & Green	SNPB	N / A for Pkg Type	-55 to 125	JM38510/ 30701SFA	Samples
JM38510/30701SFA	ACTIVE	CFP	W	16	25	Non-RoHS & Green	SNPB	N / A for Pkg Type	-55 to 125	JM38510/ 30701SFA	Samples
M38510/07701BEA	ACTIVE	CDIP	J	16	25	Non-RoHS & Green	SNPB	N / A for Pkg Type	-55 to 125	JM38510/ 07701BEA	Samples
M38510/07701BEA	ACTIVE	CDIP	J	16	25	Non-RoHS & Green	SNPB	N / A for Pkg Type	-55 to 125	JM38510/ 07701BEA	Samples
M38510/07701BFA	ACTIVE	CFP	W	16	25	Non-RoHS & Green	SNPB	N / A for Pkg Type	-55 to 125	JM38510/ 07701BFA	Samples
M38510/07701BFA	ACTIVE	CFP	W	16	25	Non-RoHS & Green	SNPB	N / A for Pkg Type	-55 to 125	JM38510/ 07701BFA	Samples
M38510/30701B2A	ACTIVE	LCCC	FK	20	55	Non-RoHS & Green	SNPB	N / A for Pkg Type	-55 to 125	JM38510/ 30701B2A	Samples
M38510/30701B2A	ACTIVE	LCCC	FK	20	55	Non-RoHS & Green	SNPB	N / A for Pkg Type	-55 to 125	JM38510/ 30701B2A	Samples
M38510/30701BEA	ACTIVE	CDIP	J	16	25	Non-RoHS & Green	SNPB	N / A for Pkg Type	-55 to 125	JM38510/ 30701BEA	Samples
M38510/30701BEA	ACTIVE	CDIP	J	16	25	Non-RoHS & Green	SNPB	N / A for Pkg Type	-55 to 125	JM38510/ 30701BEA	Samples
M38510/30701BFA	ACTIVE	CFP	W	16	25	Non-RoHS & Green	SNPB	N / A for Pkg Type	-55 to 125	JM38510/ 30701BFA	Samples
M38510/30701BFA	ACTIVE	CFP	W	16	25	Non-RoHS & Green	SNPB	N / A for Pkg Type	-55 to 125	JM38510/ 30701BFA	Samples

Orderable Device	Status (1)	Package Type	Package Drawing	Pins	Package Qty	Eco Plan (2)	Lead finish/ Ball material (6)	MSL Peak Temp (3)	Op Temp (°C)	Device Marking (4/5)	Samples
M38510/30701SEA	ACTIVE	CDIP	J	16	25	Non-RoHS & Green	SNPB	N / A for Pkg Type	-55 to 125	JM38510/ 30701SEA	Samples
M38510/30701SEA	ACTIVE	CDIP	J	16	25	Non-RoHS & Green	SNPB	N / A for Pkg Type	-55 to 125	JM38510/ 30701SEA	Samples
M38510/30701SFA	ACTIVE	CFP	W	16	25	Non-RoHS & Green	SNPB	N / A for Pkg Type	-55 to 125	JM38510/ 30701SFA	Samples
M38510/30701SFA	ACTIVE	CFP	W	16	25	Non-RoHS & Green	SNPB	N / A for Pkg Type	-55 to 125	JM38510/ 30701SFA	Samples
SN54LS138J	ACTIVE	CDIP	J	16	25	Non-RoHS & Green	SNPB	N / A for Pkg Type	-55 to 125	SN54LS138J	Samples
SN54LS138J	ACTIVE	CDIP	J	16	25	Non-RoHS & Green	SNPB	N / A for Pkg Type	-55 to 125	SN54LS138J	Samples
SN54S138J	ACTIVE	CDIP	J	16	25	Non-RoHS & Green	SNPB	N / A for Pkg Type	-55 to 125	SN54S138J	Samples
SN54S138J	ACTIVE	CDIP	J	16	25	Non-RoHS & Green	SNPB	N / A for Pkg Type	-55 to 125	SN54S138J	Samples
SN74LS138D	ACTIVE	SOIC	D	16	40	RoHS & Green	NIPDAU	Level-1-260C-UNLIM	0 to 70	LS138	Samples
SN74LS138D	ACTIVE	SOIC	D	16	40	RoHS & Green	NIPDAU	Level-1-260C-UNLIM	0 to 70	LS138	Samples
SN74LS138DG4	ACTIVE	SOIC	D	16	40	RoHS & Green	NIPDAU	Level-1-260C-UNLIM	0 to 70	LS138	Samples
SN74LS138DG4	ACTIVE	SOIC	D	16	40	RoHS & Green	NIPDAU	Level-1-260C-UNLIM	0 to 70	LS138	Samples
SN74LS138DR	ACTIVE	SOIC	D	16	2500	RoHS & Green	NIPDAU	Level-1-260C-UNLIM	0 to 70	LS138	Samples
SN74LS138DR	ACTIVE	SOIC	D	16	2500	RoHS & Green	NIPDAU	Level-1-260C-UNLIM	0 to 70	LS138	Samples
SN74LS138N	ACTIVE	PDIP	N	16	25	RoHS & Green	NIPDAU	N / A for Pkg Type	0 to 70	SN74LS138N	Samples
SN74LS138N	ACTIVE	PDIP	N	16	25	RoHS & Green	NIPDAU	N / A for Pkg Type	0 to 70	SN74LS138N	Samples
SN74LS138NE4	ACTIVE	PDIP	N	16	25	RoHS & Green	NIPDAU	N / A for Pkg Type	0 to 70	SN74LS138N	Samples
SN74LS138NE4	ACTIVE	PDIP	N	16	25	RoHS & Green	NIPDAU	N / A for Pkg Type	0 to 70	SN74LS138N	Samples
SN74LS138NSR	ACTIVE	SO	NS	16	2000	RoHS & Green	NIPDAU	Level-1-260C-UNLIM	0 to 70	74LS138	Samples

Orderable Device	Status (1)	Package Type	Package Drawing	Pins	Package Qty	Eco Plan (2)	Lead finish/ Ball material (6)	MSL Peak Temp (3)	Op Temp (°C)	Device Marking (4/5)	Samples
SN74LS138NSR	ACTIVE	SO	NS	16	2000	RoHS & Green	NIPDAU	Level-1-260C-UNLIM	0 to 70	74LS138	Samples
SN74S138AD	ACTIVE	SOIC	D	16	40	RoHS & Green	NIPDAU	Level-1-260C-UNLIM	0 to 70	S138A	Samples
SN74S138AN	ACTIVE	PDIP	N	16	25	RoHS & Green	NIPDAU	N / A for Pkg Type	0 to 70	SN74S138AN	Samples
SN74S138ANE4	ACTIVE	PDIP	N	16	25	RoHS & Green	NIPDAU	N / A for Pkg Type	0 to 70	SN74S138AN	Samples
SNJ54LS138FK	ACTIVE	LCCC	FK	20	55	Non-RoHS & Green	SNPB	N / A for Pkg Type	-55 to 125	76005012A SNJ54LS 138FK	Samples
SNJ54LS138FK	ACTIVE	LCCC	FK	20	55	Non-RoHS & Green	SNPB	N / A for Pkg Type	-55 to 125	76005012A SNJ54LS 138FK	Samples
SNJ54LS138J	ACTIVE	CDIP	J	16	25	Non-RoHS & Green	SNPB	N / A for Pkg Type	-55 to 125	7600501EA SNJ54LS138J	Samples
SNJ54LS138J	ACTIVE	CDIP	J	16	25	Non-RoHS & Green	SNPB	N / A for Pkg Type	-55 to 125	7600501EA SNJ54LS138J	Samples
SNJ54LS138W	ACTIVE	CFP	W	16	25	Non-RoHS & Non-Green	SNPB	N / A for Pkg Type	-55 to 125	7600501FA SNJ54LS138W	Samples
SNJ54LS138W	ACTIVE	CFP	W	16	25	Non-RoHS & Non-Green	SNPB	N / A for Pkg Type	-55 to 125	7600501FA SNJ54LS138W	Samples
SNJ54S138J	ACTIVE	CDIP	J	16	25	Non-RoHS & Green	SNPB	N / A for Pkg Type	-55 to 125	7604101EA SNJ54S138J	Samples
SNJ54S138J	ACTIVE	CDIP	J	16	25	Non-RoHS & Green	SNPB	N / A for Pkg Type	-55 to 125	7604101EA SNJ54S138J	Samples
SNJ54S138W	ACTIVE	CFP	W	16	25	Non-RoHS & Green	SNPB	N / A for Pkg Type	-55 to 125	7604101FA SNJ54S138W	Samples
SNJ54S138W	ACTIVE	CFP	W	16	25	Non-RoHS & Green	SNPB	N / A for Pkg Type	-55 to 125	7604101FA SNJ54S138W	Samples

(1) The marketing status values are defined as follows:
ACTIVE: Product device recommended for new designs.
LIFEBUY: TI has announced that the device will be discontinued, and a lifetime-buy period is in effect.
NRND: Not recommended for new designs. Device is in production to support existing customers, but TI does not recommend using this part in a new design.
PREVIEW: Device has been announced but is not in production. Samples may or may not be available.
OBSOLETE: TI has discontinued the production of the device.

(2) **RoHS:** TI defines "RoHS" to mean semiconductor products that are compliant with the current EU RoHS requirements for all 10 RoHS substances, including the requirement that RoHS substance do not exceed 0.1% by weight in homogeneous materials. Where designed to be soldered at high temperatures, "RoHS" products are suitable for use in specified lead-free processes. TI may reference these types of products as "Pb-Free".
RoHS Exempt: TI defines "RoHS Exempt" to mean products that contain lead but are compliant with EU RoHS pursuant to a specific EU RoHS exemption.
Green: TI defines "Green" to mean the content of Chlorine (Cl) and Bromine (Br) based flame retardants meet JS709B low halogen requirements of <=1000ppm threshold. Antimony trioxide based flame retardants must also meet the <=1000ppm threshold requirement.

(3) MSL, Peak Temp. - The Moisture Sensitivity Level rating according to the JEDEC industry standard classifications, and peak solder temperature.

(4) There may be additional marking, which relates to the logo, the lot trace code information, or the environmental category on the device.

(5) Multiple Device Markings will be inside parentheses. Only one Device Marking contained in parentheses and separated by a "~" will appear on a device. If a line is indented then it is a continuation of the previous line and the two combined represent the entire Device Marking for that device.

(6) Lead finish/Ball material - Orderable Devices may have multiple material finish options. Finish options are separated by a vertical ruled line. Lead finish/Ball material values may wrap to two lines if the finish value exceeds the maximum column width.

Important Information and Disclaimer: The information provided on this page represents TI's knowledge and belief as of the date that it is provided. TI bases its knowledge and belief on information provided by third parties, and makes no representation or warranty as to the accuracy of such information. Efforts are underway to better integrate information from third parties. TI has taken and continues to take reasonable steps to provide representative and accurate information but may not have conducted destructive testing or chemical analysis on incoming materials and chemicals. TI and TI suppliers consider certain information to be proprietary, and thus CAS numbers and other limited information may not be available for release.

In no event shall TI's liability arising out of such information exceed the total purchase price of the TI part(s) at issue in this document sold by TI to Customer on an annual basis.

OTHER QUALIFIED VERSIONS OF SN54LS138, SN54LS138-SP, SN74LS138 :

- Catalog : SN74LS138, SN54LS138
- Military : SN54LS138
- Space : SN54LS138-SP

NOTE: Qualified Version Definitions:

- Catalog - TI's standard catalog product
- Military - QML certified for Military and Defense Applications

- Space - Radiation tolerant, ceramic packaging and qualified for use in Space-based application

TAPE AND REEL INFORMATION

REEL DIMENSIONS

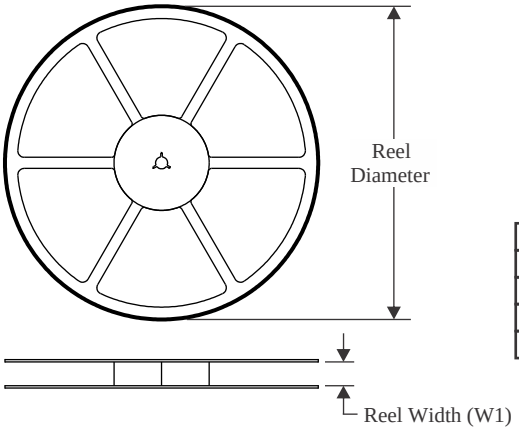

TAPE DIMENSIONS

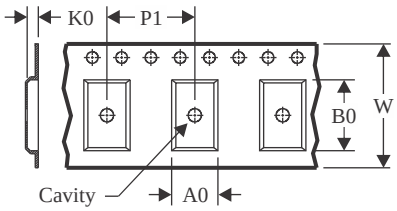

A0	Dimension designed to accommodate the component width
B0	Dimension designed to accommodate the component length
K0	Dimension designed to accommodate the component thickness
W	Overall width of the carrier tape
P1	Pitch between successive cavity centers

QUADRANT ASSIGNMENTS FOR PIN 1 ORIENTATION IN TAPE

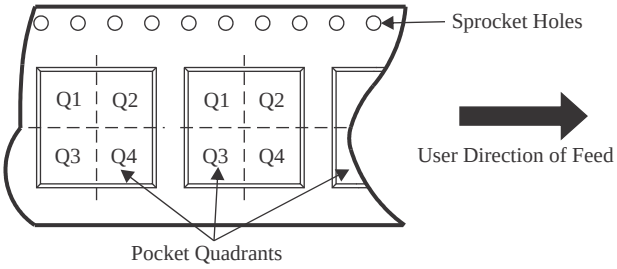

*All dimensions are nominal

Device	Package Type	Package Drawing	Pins	SPQ	Reel Diameter (mm)	Reel Width W1 (mm)	A0 (mm)	B0 (mm)	K0 (mm)	P1 (mm)	W (mm)	Pin1 Quadrant
SN74LS138DR	SOIC	D	16	2500	330.0	16.4	6.5	10.3	2.1	8.0	16.0	Q1
SN74LS138NSR	SO	NS	16	2000	330.0	16.4	8.2	10.5	2.5	12.0	16.0	Q1

TAPE AND REEL BOX DIMENSIONS

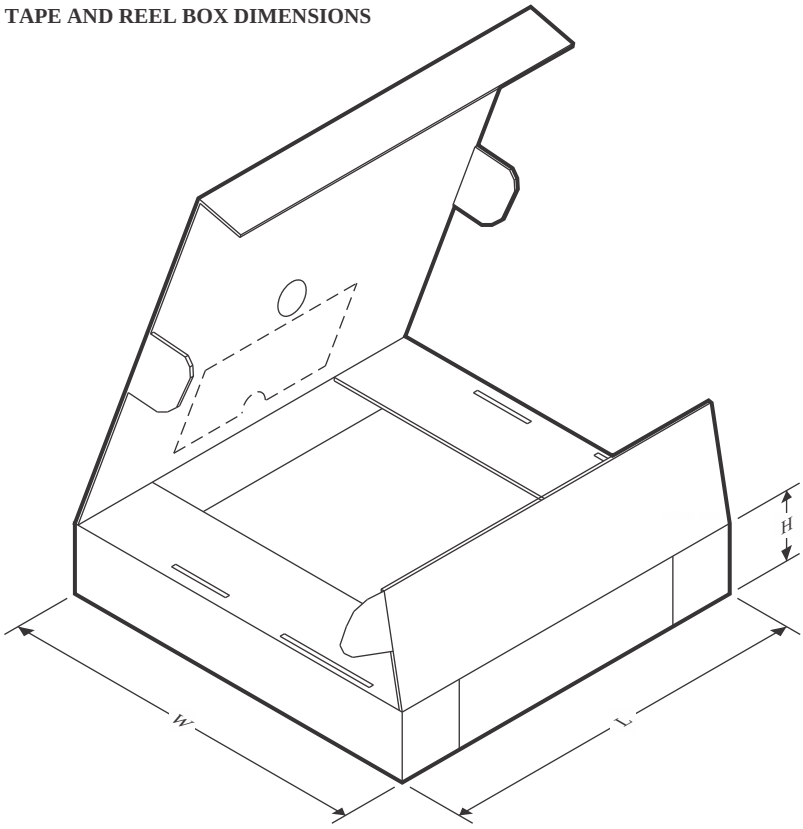

*All dimensions are nominal

Device	Package Type	Package Drawing	Pins	SPQ	Length (mm)	Width (mm)	Height (mm)
SN74LS138DR	SOIC	D	16	2500	353.0	353.0	32.0
SN74LS138NSR	SO	NS	16	2000	356.0	356.0	35.0

TUBE

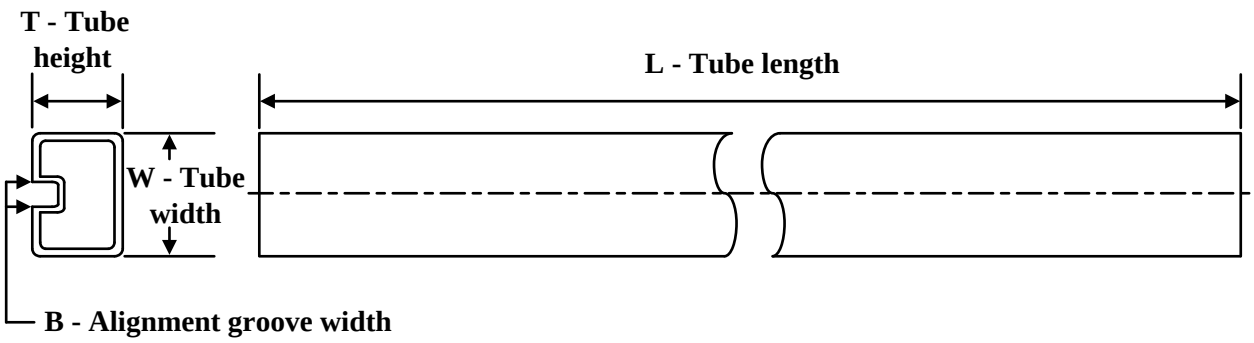

*All dimensions are nominal

Device	Package Name	Package Type	Pins	SPQ	L (mm)	W (mm)	T (µm)	B (mm)
76005012A	FK	LCCC	20	55	506.98	12.06	2030	NA
7600501FA	W	CFP	16	25	506.98	26.16	6220	NA
JM38510/07701BFA	W	CFP	16	25	506.98	26.16	6220	NA
JM38510/30701B2A	FK	LCCC	20	55	506.98	12.06	2030	NA
JM38510/30701BFA	W	CFP	16	25	506.98	26.16	6220	NA
JM38510/30701SFA	W	CFP	16	25	506.98	26.16	6220	NA
M38510/07701BFA	W	CFP	16	25	506.98	26.16	6220	NA
M38510/30701B2A	FK	LCCC	20	55	506.98	12.06	2030	NA
M38510/30701BFA	W	CFP	16	25	506.98	26.16	6220	NA
M38510/30701SFA	W	CFP	16	25	506.98	26.16	6220	NA
SN74LS138D	D	SOIC	16	40	507	8	3940	4.32
SN74LS138DG4	D	SOIC	16	40	507	8	3940	4.32
SN74LS138N	N	PDIP	16	25	506	13.97	11230	4.32
SN74LS138N	N	PDIP	16	25	506	13.97	11230	4.32
SN74LS138NE4	N	PDIP	16	25	506	13.97	11230	4.32
SN74LS138NE4	N	PDIP	16	25	506	13.97	11230	4.32
SN74S138AD	D	SOIC	16	40	507	8	3940	4.32
SN74S138AN	N	PDIP	16	25	506	13.97	11230	4.32
SN74S138AN	N	PDIP	16	25	506	13.97	11230	4.32
SN74S138ANE4	N	PDIP	16	25	506	13.97	11230	4.32
SN74S138ANE4	N	PDIP	16	25	506	13.97	11230	4.32
SNJ54LS138FK	FK	LCCC	20	55	506.98	12.06	2030	NA
SNJ54LS138W	W	CFP	16	25	506.98	26.16	6220	NA

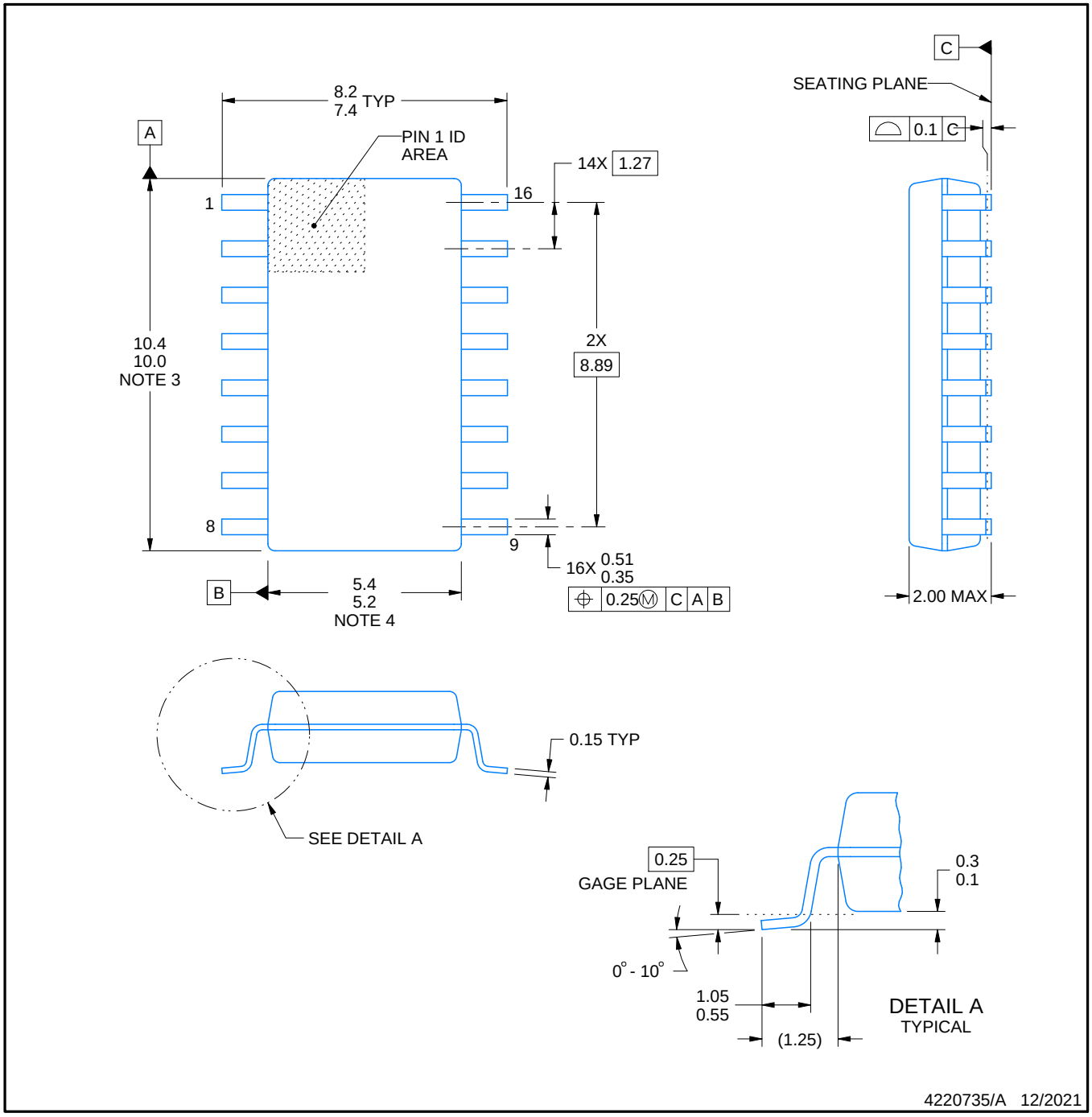

NOTES:

1. All linear dimensions are in millimeters. Dimensions in parenthesis are for reference only. Dimensioning and tolerancing per ASME Y14.5M.
2. This drawing is subject to change without notice.
3. This dimension does not include mold flash, protrusions, or gate burrs. Mold flash, protrusions, or gate burrs shall not exceed 0.15 mm, per side.
4. This dimension does not include interlead flash. Interlead flash shall not exceed 0.25 mm, per side.

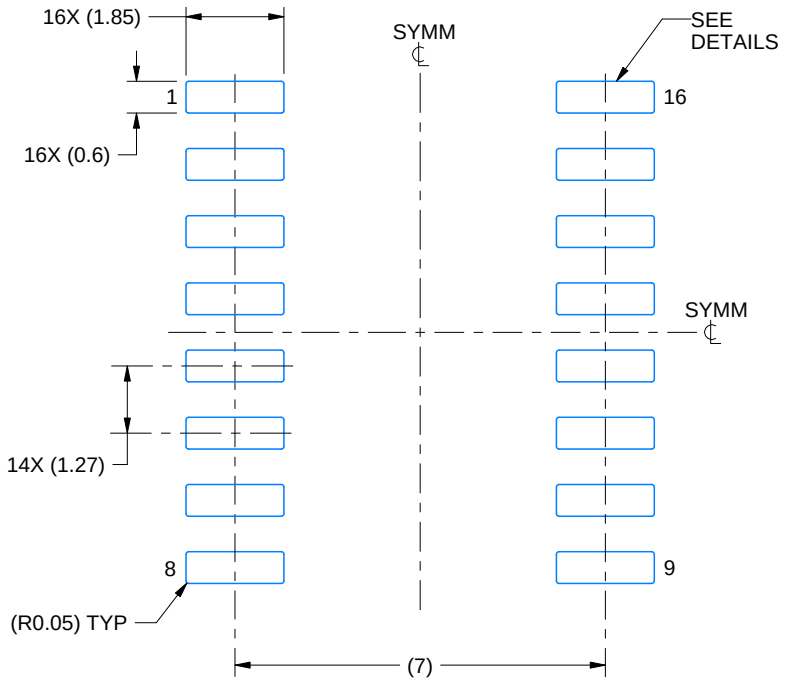

LAND PATTERN EXAMPLE
SCALE:7X

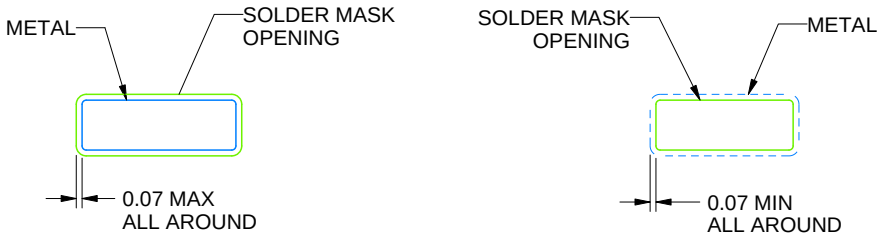

NON SOLDER MASK DEFINED

SOLDER MASK DEFINED

SOLDER MASK DETAILS

4220735/A 12/2021

NOTES: (continued)

5. Publication IPC-7351 may have alternate designs.
6. Solder mask tolerances between and around signal pads can vary based on board fabrication site.

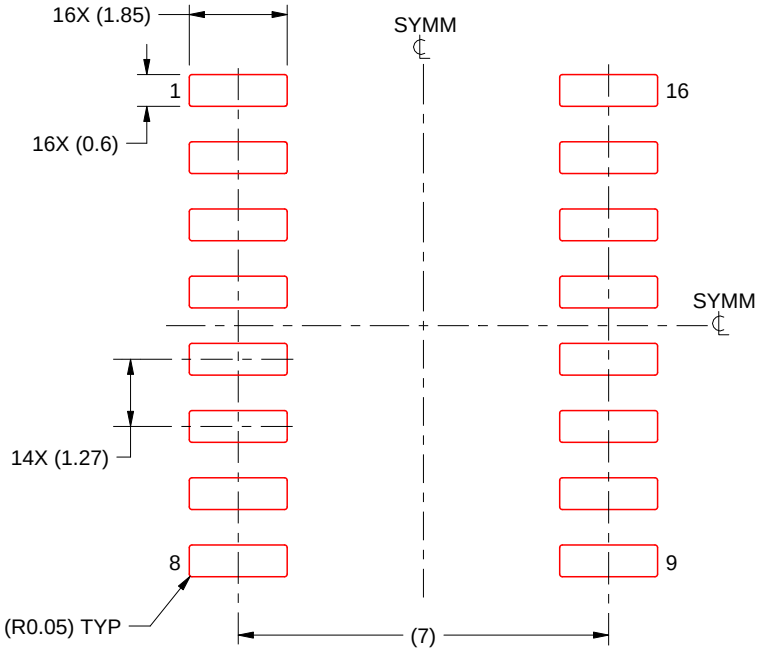

SOLDER PASTE EXAMPLE
BASED ON 0.125 mm THICK STENCIL
SCALE:7X

4220735/A 12/2021

NOTES: (continued)

7. Laser cutting apertures with trapezoidal walls and rounded corners may offer better paste release. IPC-7525 may have alternate design recommendations.
8. Board assembly site may have different recommendations for stencil design.

D (R–PDSO–G16) PLASTIC SMALL OUTLINE

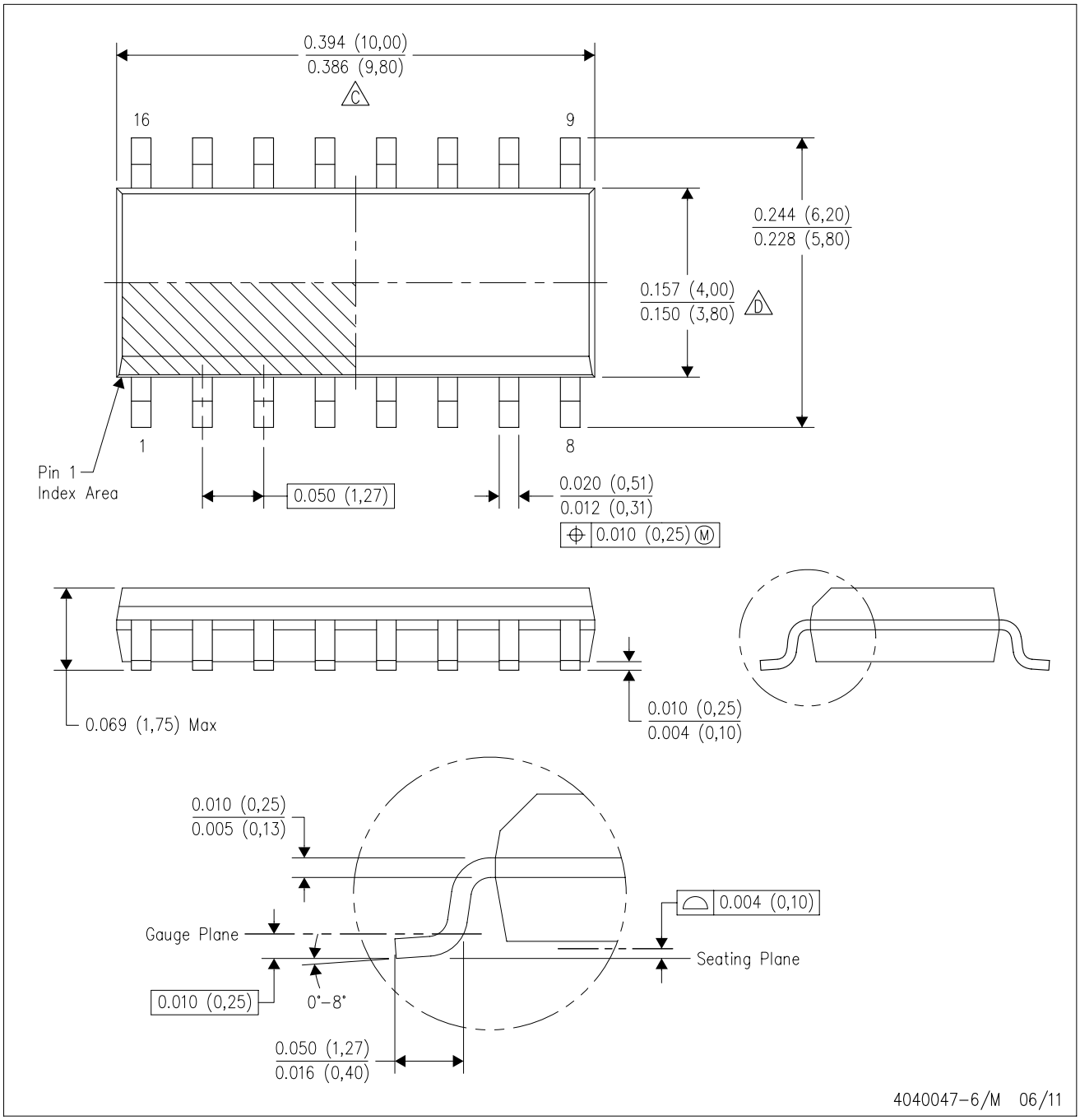

NOTES:
A. All linear dimensions are in inches (millimeters).
B. This drawing is subject to change without notice.
C. Body length does not include mold flash, protrusions, or gate burrs. Mold flash, protrusions, or gate burrs shall not exceed 0.006 (0,15) each side.
D. Body width does not include interlead flash. Interlead flash shall not exceed 0.017 (0,43) each side.
E. Reference JEDEC MS–012 variation AC.

D (R–PDSO–G16) PLASTIC SMALL OUTLINE

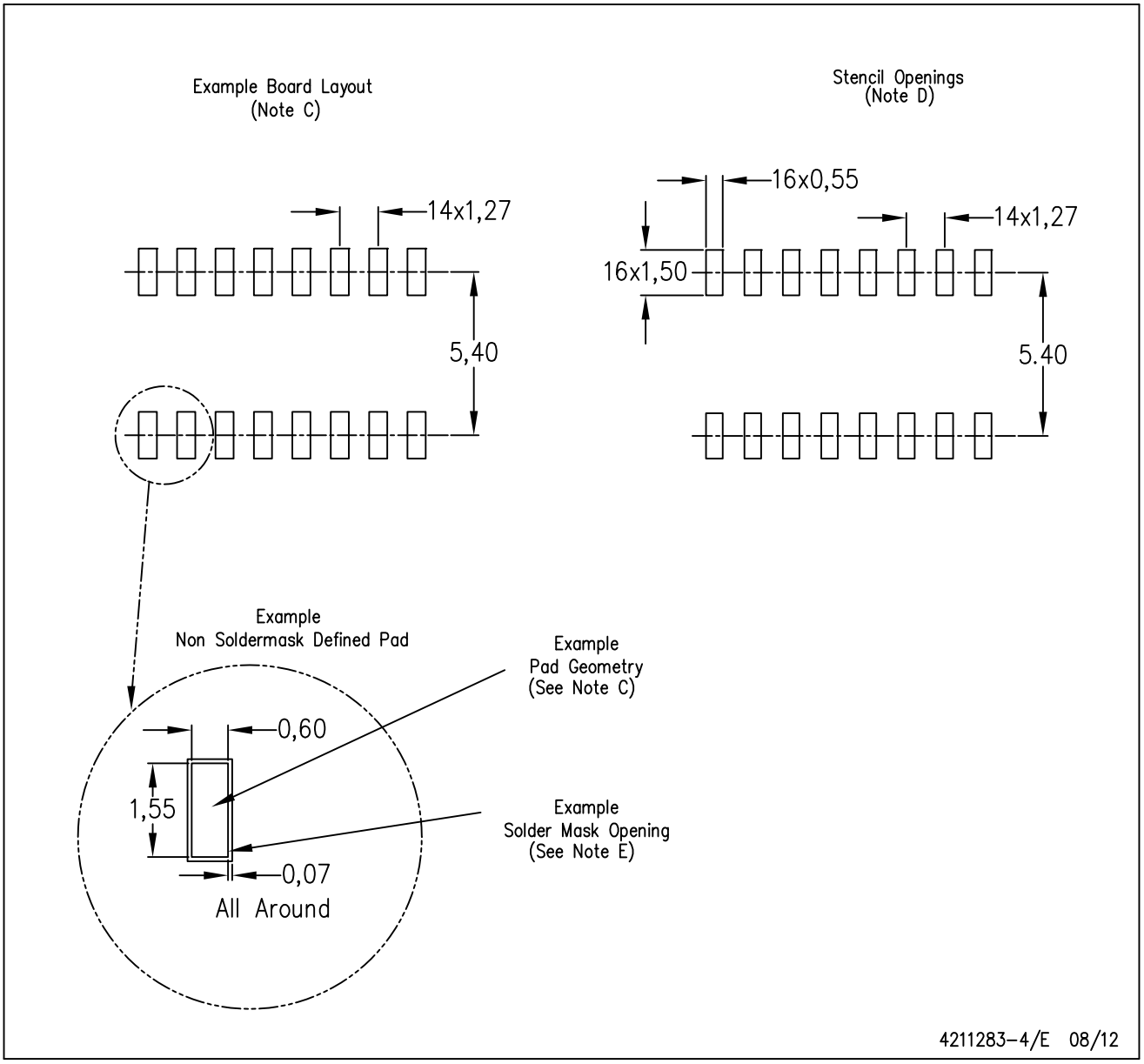

NOTES:
A. All linear dimensions are in millimeters.
B. This drawing is subject to change without notice.
C. Publication IPC–7351 is recommended for alternate designs.
D. Laser cutting apertures with trapezoidal walls and also rounding corners will offer better paste release. Customers should contact their board assembly site for stencil design recommendations. Refer to IPC–7525 for other stencil recommendations.
E. Customers should contact their board fabrication site for solder mask tolerances between and around signal pads.

MECHANICAL DATA

NS (R-PDSO-G)** **PLASTIC SMALL-OUTLINE PACKAGE**

14-PINS SHOWN

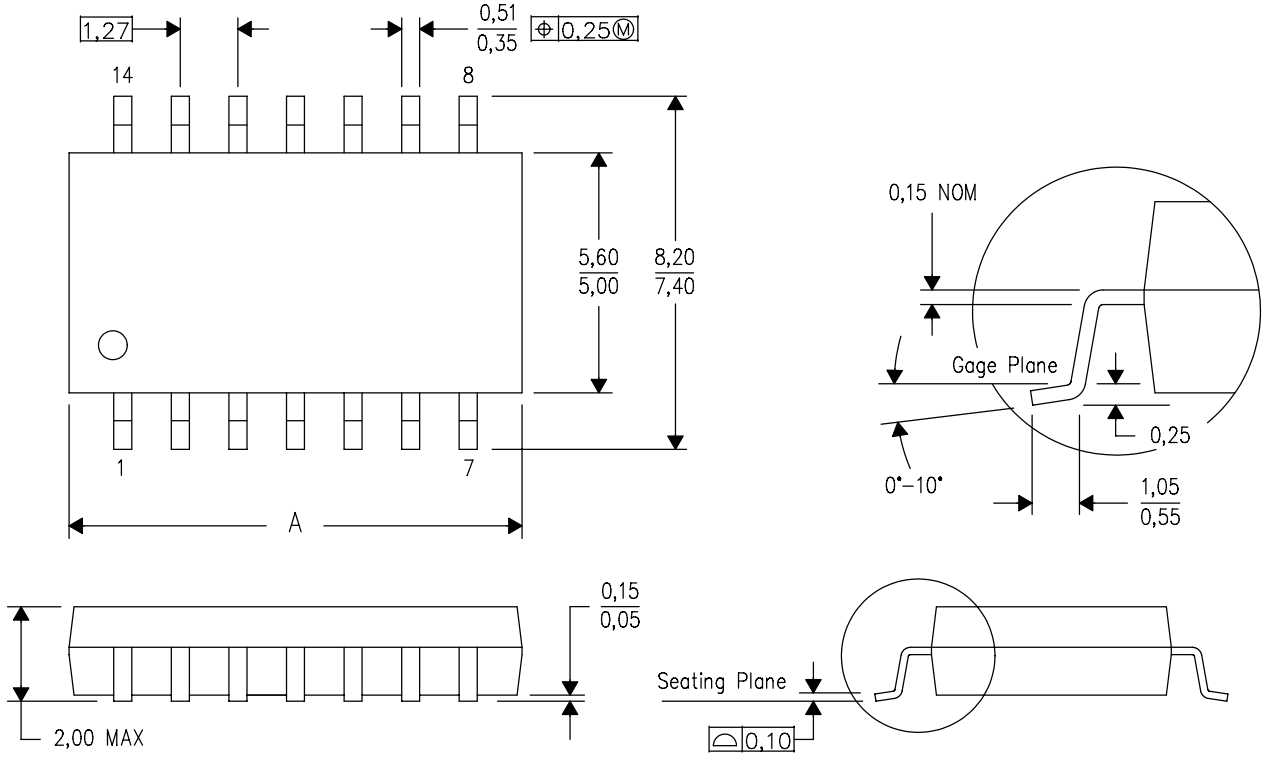

DIM \ PINS **	14	16	20	24
A MAX	10,50	10,50	12,90	15,30
A MIN	9,90	9,90	12,30	14,70

4040062/C 03/03

NOTES:
A. All linear dimensions are in millimeters.
B. This drawing is subject to change without notice.
C. Body dimensions do not include mold flash or protrusion, not to exceed 0,15.

W (R–GDFP–F16) CERAMIC DUAL FLATPACK

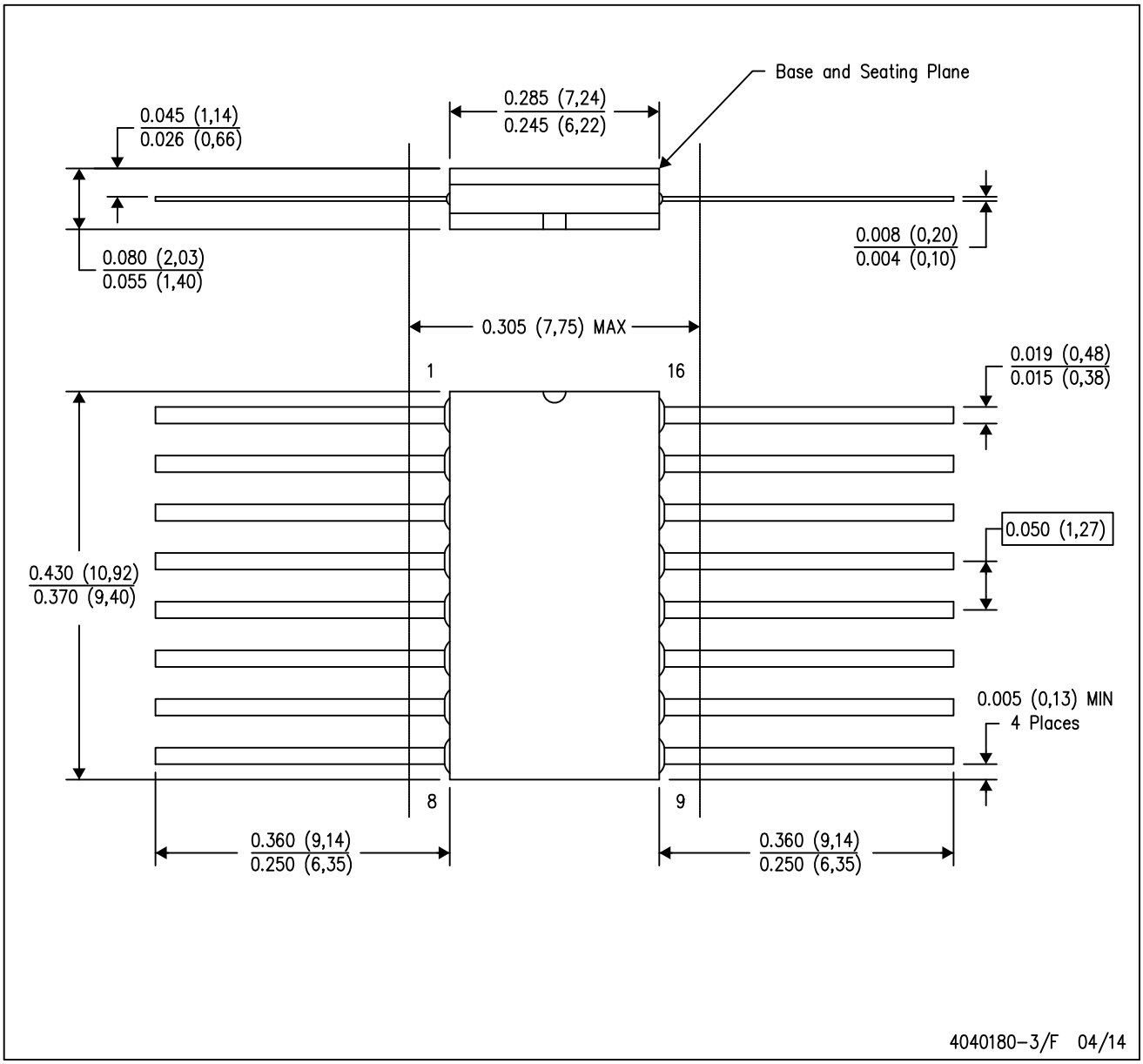

NOTES:
A. All linear dimensions are in inches (millimeters).
B. This drawing is subject to change without notice.
C. This package can be hermetically sealed with a ceramic lid using glass frit.
D. Index point is provided on cap for terminal identification only.
E. Falls within MIL STD 1835 GDFP2–F16

GENERIC PACKAGE VIEW

FK 20

LCCC - 2.03 mm max height

8.89 x 8.89, 1.27 mm pitch

LEADLESS CERAMIC CHIP CARRIER

This image is a representation of the package family, actual package may vary.
Refer to the product data sheet for package details.

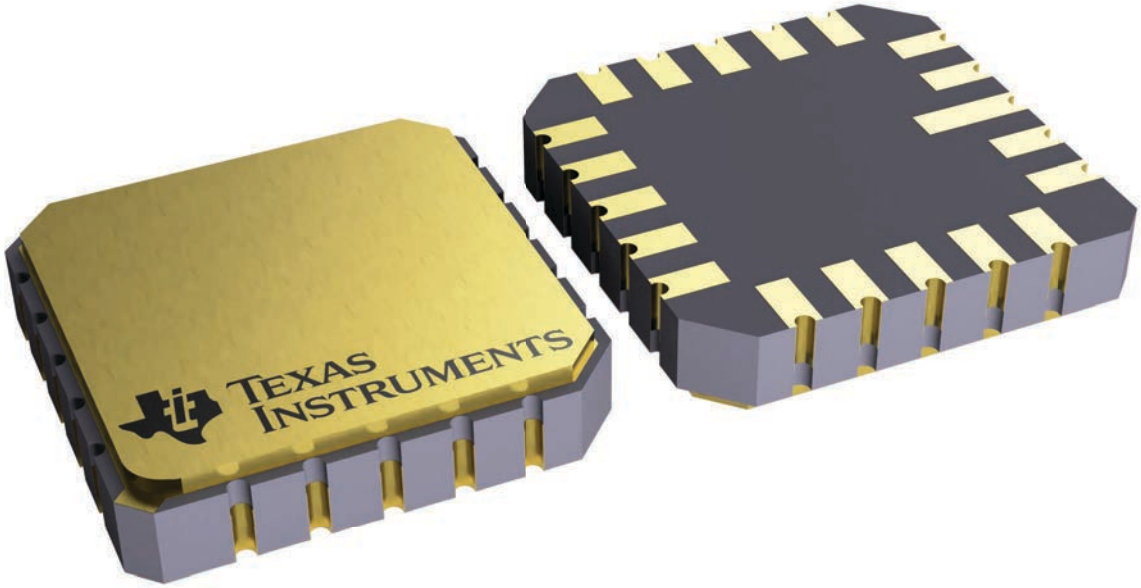

4229370VA\

J (R–GDIP–T**) CERAMIC DUAL IN–LINE PACKAGE

14 LEADS SHOWN

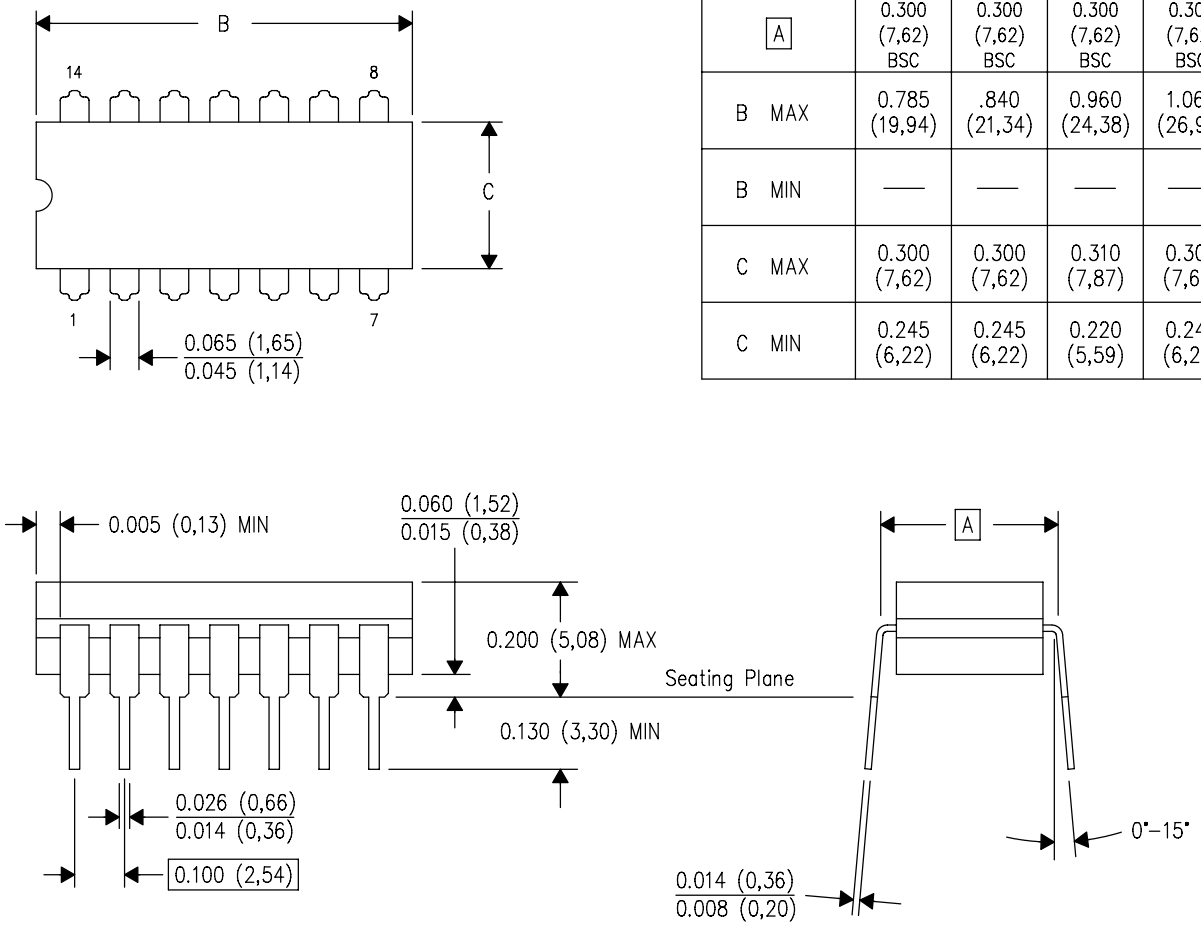

DIM \ PINS **	14	16	18	20
A	0.300 (7,62) BSC	0.300 (7,62) BSC	0.300 (7,62) BSC	0.300 (7,62) BSC
B MAX	0.785 (19,94)	.840 (21,34)	0.960 (24,38)	1.060 (26,92)
B MIN	—	—	—	—
C MAX	0.300 (7,62)	0.300 (7,62)	0.310 (7,87)	0.300 (7,62)
C MIN	0.245 (6,22)	0.245 (6,22)	0.220 (5,59)	0.245 (6,22)

4040083/F 03/03

NOTES:
- A. All linear dimensions are in inches (millimeters).
- B. This drawing is subject to change without notice.
- C. This package is hermetically sealed with a ceramic lid using glass frit.
- D. Index point is provided on cap for terminal identification only on press ceramic glass frit seal only.
- E. Falls within MIL STD 1835 GDIP1–T14, GDIP1–T16, GDIP1–T18 and GDIP1–T20.

N (R–PDIP–T**) PLASTIC DUAL–IN–LINE PACKAGE

16 PINS SHOWN

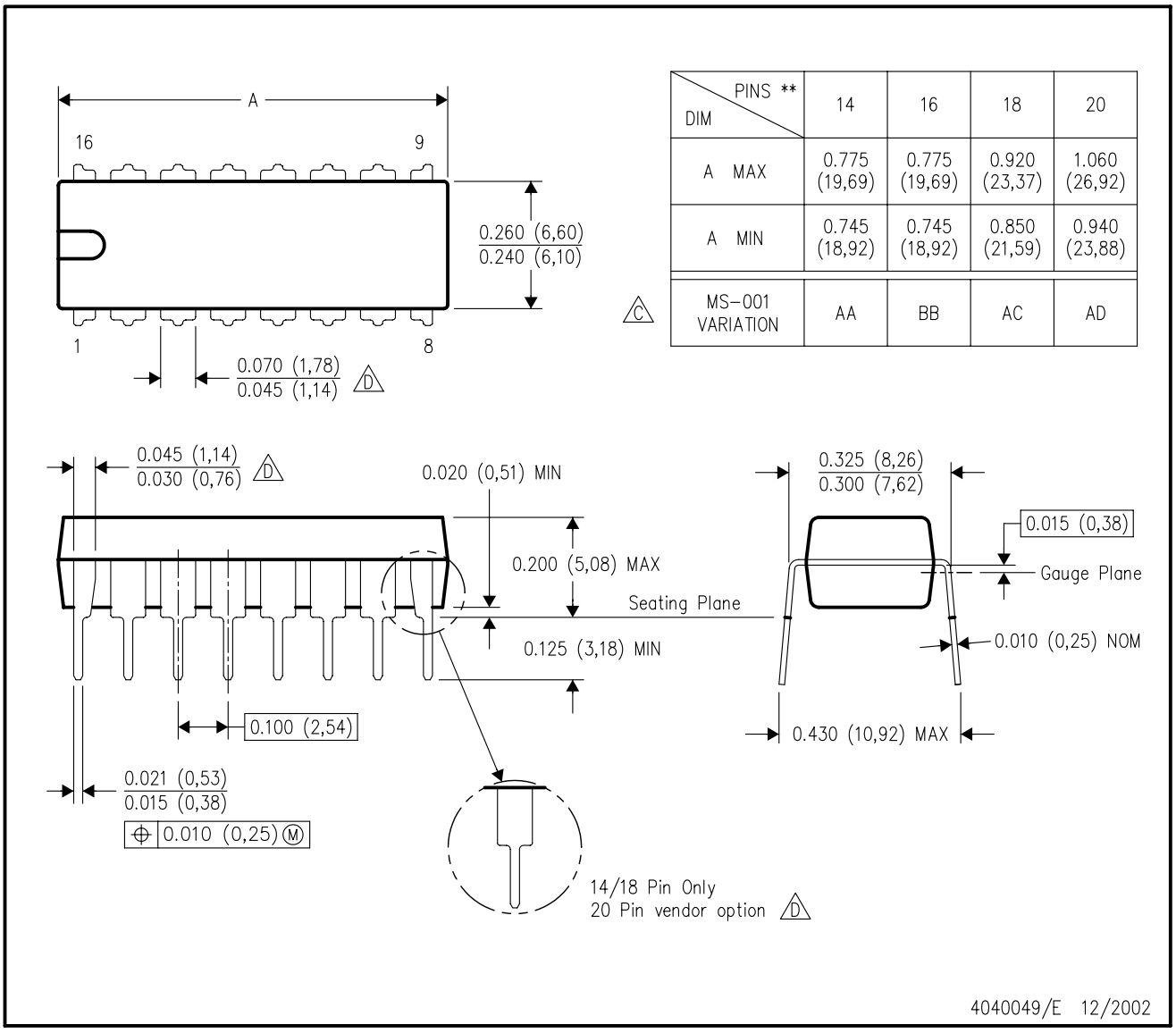

DIM \ PINS **	14	16	18	20
A MAX	0.775 (19,69)	0.775 (19,69)	0.920 (23,37)	1.060 (26,92)
A MIN	0.745 (18,92)	0.745 (18,92)	0.850 (21,59)	0.940 (23,88)
MS–001 VARIATION (C)	AA	BB	AC	AD

NOTES:
A. All linear dimensions are in inches (millimeters).
B. This drawing is subject to change without notice.
C. Falls within JEDEC MS–001, except 18 and 20 pin minimum body length (Dim A).
D. The 20 pin end lead shoulder width is a vendor option, either half or full width.

IMPORTANT NOTICE AND DISCLAIMER

TI PROVIDES TECHNICAL AND RELIABILITY DATA (INCLUDING DATA SHEETS), DESIGN RESOURCES (INCLUDING REFERENCE DESIGNS), APPLICATION OR OTHER DESIGN ADVICE, WEB TOOLS, SAFETY INFORMATION, AND OTHER RESOURCES “AS IS” AND WITH ALL FAULTS, AND DISCLAIMS ALL WARRANTIES, EXPRESS AND IMPLIED, INCLUDING WITHOUT LIMITATION ANY IMPLIED WARRANTIES OF MERCHANTABILITY, FITNESS FOR A PARTICULAR PURPOSE OR NON-INFRINGEMENT OF THIRD PARTY INTELLECTUAL PROPERTY RIGHTS.

These resources are intended for skilled developers designing with TI products. You are solely responsible for (1) selecting the appropriate TI products for your application, (2) designing, validating and testing your application, and (3) ensuring your application meets applicable standards, and any other safety, security, regulatory or other requirements.

These resources are subject to change without notice. TI grants you permission to use these resources only for development of an application that uses the TI products described in the resource. Other reproduction and display of these resources is prohibited. No license is granted to any other TI intellectual property right or to any third party intellectual property right. TI disclaims responsibility for, and you will fully indemnify TI and its representatives against, any claims, damages, costs, losses, and liabilities arising out of your use of these resources.

TI’s products are provided subject to TI’s Terms of Sale or other applicable terms available either on ti.com or provided in conjunction with such TI products. TI’s provision of these resources does not expand or otherwise alter TI’s applicable warranties or warranty disclaimers for TI products.

TI objects to and rejects any additional or different terms you may have proposed.

Mailing Address: Texas Instruments, Post Office Box 655303, Dallas, Texas 75265
Copyright © 2024, Texas Instruments Incorporated