CC2640R2F
SimpleLink™ *Bluetooth®* 5.1 Low Energy Wireless MCU

1 Features

- Microcontroller
  - Powerful Arm® Cortex®-M3
  - EEMBC CoreMark® score: 142
  - Up to 48-MHz clock speed
  - 275KB of nonvolatile memory including 128KB of in-system Programmable Flash
  - Up to 28KB of system SRAM, of which 20KB is ultra-low leakage SRAM
  - 8KB of SRAM for cache or system RAM use
  - 2-Pin cJTAG and JTAG debugging
  - Supports over-the-air upgrade (OTA)
- Ultra-low power sensor controller
  - Can run autonomous from the rest of the system
  - 16-bit architecture
  - 2KB of ultra-low leakage SRAM for code and data
- Efficient code size architecture, placing drivers, TI-RTOS, and Bluetooth® software in ROM to make more Flash available for the application
- RoHS-compliant packages
  - 2.7-mm × 2.7-mm YFV DSBGA34 (14 GPIOs)
  - 4-mm × 4-mm RSM VQFN32 (10 GPIOs)
  - 5-mm × 5-mm RHB VQFN32 (15 GPIOs)
  - 7-mm × 7-mm RGZ VQFN48 (31 GPIOs)
- Peripherals
  - All digital peripheral pins can be routed to any GPIO
  - Four general-purpose timer modules (eight 16-bit or four 32-bit timers, PWM each)
  - 12-bit ADC, 200-ksamples/s, 8-channel analog MUX
  - Continuous time comparator
  - Ultra-low power analog comparator
  - Programmable current source
  - UART, I2C, and I2S
  - 2× SSI (SPI, MICROWIRE, TI)
  - Real-Time Clock (RTC)
  - AES-128 security module
  - True Random Number Generator (TRNG)
  - Support for eight capacitive-sensing buttons
  - Integrated temperature sensor
- External system
  - On-chip internal DC/DC converter
  - Seamless integration with CC2590 and CC2592 range extenders
  - Very few external components
  - Pin compatible with the SimpleLink™ CC2640 and CC2650 devices in all VQFN packages
  - Pin compatible with the SimpleLink™ CC2642R and CC2652R devices in 7-mm x 7-mm VQFN packages
  - Pin compatible with the SimpleLink™ CC1350 device in 4-mm × 4-mm and 5-mm × 5-mm VQFN packages
- Low power
  - Wide supply voltage range
    - Normal operation: 1.8 to 3.8 V
    - External regulator mode: 1.7 to 1.95 V
  - Active-Mode RX: 5.9 mA
  - Active-Mode TX at 0 dBm: 6.1 mA
  - Active-Mode TX at +5 dBm: 9.1 mA
  - Active-Mode MCU: 61 µA/MHz
  - Active-Mode MCU: 48.5 CoreMark/mA
  - Active-Mode sensor controller: 0.4mA + 8.2 µA/MHz
  - Standby: 1.1 µA (RTC running and RAM/CPU retention)
  - Shutdown: 100 nA (wake up on external events)
- RF section
  - 2.4-GHz RF transceiver compatible with Bluetooth® Low Energy 5.1 and earlier LE specifications
  - Excellent receiver sensitivity (–97 dBm for BLE), selectivity, and blocking performance
  - Link budget of 102 dB for BLE
  - Programmable output power up to +5 dBm
  - Single-ended or differential RF interface
  - Suitable for systems targeting compliance with worldwide radio frequency regulations
    - ETSI EN 300 328 (Europe)
    - EN 300 440 Class 2 (Europe)
    - FCC CFR47 Part 15 (US)
    - ARIB STD-T66 (Japan)

An IMPORTANT NOTICE at the end of this data sheet addresses availability, warranty, changes, use in safety-critical applications, intellectual property matters and other important disclaimers. PRODUCTION DATA.

- Development *Tools and Software*
  - Full-feature development kits
  - Multiple reference designs
  - SmartRF™ Studio
  - Sensor Controller Studio
  - IAR Embedded Workbench® for Arm®
  - Code Composer Studio™ Integrated Development Environment (IDE)
  - Code Composer Studio™ Cloud IDE

2 Applications

- Home and Building Automation
  - Connected appliances
  - Lighting
  - Smart locks
  - Gateways
  - Security Systems
- Industrial
  - Factory automation
  - Asset tracking and management
  - HMI
  - Access control
- Electronic Point Of Sale (EPOS)
  - Electronic Shelf Label (ESL)
- Health and Medical
  - Electronic thermometers
  - SpO2
  - Blood glucose monitors and blood pressure monitors
  - Weigh scales
  - Hearing aids
- Sports and Fitness
  - Wearable fitness and activity monitors
  - Smart trackers
  - Patient monitors
  - Fitness machines
- HID
  - Gaming
  - Pointing devices (wireless keyboard and mouse)

3 Description

The CC2640R2F device is a 2.4 GHz wireless microcontroller (MCU) supporting *Bluetooth*® 5.1 Low Energy and Proprietary 2.4 GHz applications. The device is optimized for low-power wireless communication and advanced sensing in building security systems, HVAC, asset tracking, and medical markets, and applications where industrial performance is required. The highlighted features of this device include:

- Support for *Bluetooth* ® 5.1 features: LE Coded PHYs (Long Range), LE 2-Mbit PHY (High Speed), Advertising Extensions, Multiple Advertisement Sets, as well as backwards compatibility and support for key features from the *Bluetooth* ® 5.0 and earlier Low Energy specifications.
- Fully-qualified *Bluetooth* ® 5.1 software protocol stack included with the SimpleLink™ CC2640R2F Software Development Kit (SDK) for developing applications on the powerful Arm® Cortex®-M3 processor.
- Longer battery life wireless applications with low standby current of 1.1 µA with full RAM retention.
- Advanced sensing with a programmable, autonomous ultra-low power Sensor Controller CPU with fast wake-up capability. As an example, the sensor controller is capable of 1-Hz ADC sampling at 1 µA system current.
- Dedicated software controlled radio controller (Arm® Cortex®-M0) providing flexible low-power RF transceiver capability to support multiple physical layers and RF standards, such as real-time localization (RTLS) technologies.
- Excellent radio sensitivity and robustness (selectivity and blocking) performance for *Bluetooth* ® Low Energy (-103 dBm for 125-kbps LE Coded PHY).

The CC2640R2F device is part of the SimpleLink™ microcontroller (MCU) platform, which consists of Wi-Fi®, *Bluetooth* ® Low Energy, Thread, ZigBee®, Sub-1 GHz MCUs, and host MCUs that all share a common, easy-to-use development environment with a single core software development kit (SDK) and rich tool set. A one-time integration of the SimpleLink™ platform enables you to add any combination of the portfolio's devices into your design, allowing 100 percent code reuse when your design requirements change. For more information, visit SimpleLink™ MCU platform.

Device Information (1)

PART NUMBER	PACKAGE	BODY SIZE (NOM)
CC2640R2FRGZ	VQFN (48)	7.00 mm × 7.00 mm
CC2640R2FRHB	VQFN (32)	5.00 mm × 5.00 mm
CC2640R2FRSM	VQFN (32)	4.00 mm × 4.00 mm

Copyright © 2020 Texas Instruments Incorporated

Device Information (1) (continued)

PART NUMBER	PACKAGE	BODY SIZE (NOM)
CC2640R2FYFV	DSBGA (34)	2.70 mm × 2.70 mm

(1) For more information, see Section 12.

4 Functional Block Diagram

Figure 4-1 shows a block diagram for the CC2640R2F device.

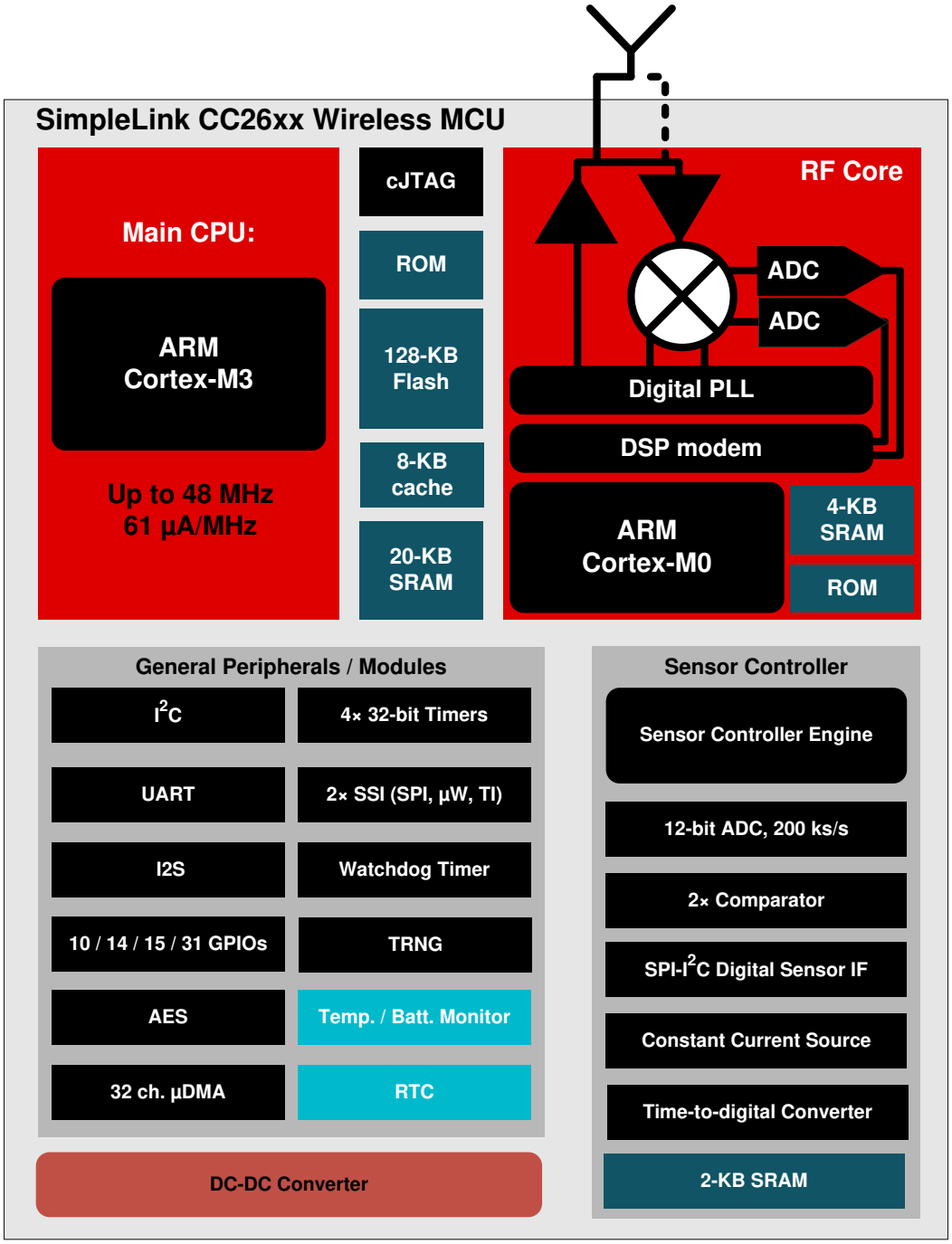

Copyright © 2016, Texas Instruments Incorporated

Figure 4-1. Block Diagram

Copyright © 2020 Texas Instruments Incorporated

Table of Contents

1 Features....1
2 Applications....2
3 Description....2
4 Functional Block Diagram....4
5 Revision History....6
6 Device Comparison....7
6.1 Related Products....7
7 Terminal Configuration and Functions....8
7.1 Pin Diagram – RGZ Package....8
7.2 Signal Descriptions – RGZ Package....9
7.3 Pin Diagram – RHB Package....11
7.4 Signal Descriptions – RHB Package....12
7.5 Pin Diagram – YFV (Chip Scale, DSBGA) Package....13
7.6 Signal Descriptions – YFV (Chip Scale, DSBGA) Package....13
7.7 Pin Diagram – RSM Package....15
7.8 Signal Descriptions – RSM Package....16
8 Specifications....17
8.1 Absolute Maximum Ratings....17
8.2 ESD Ratings....17
8.3 Recommended Operating Conditions....18
8.4 Power Consumption Summary....18
8.5 General Characteristics....19
8.6 125-kbps Coded (Bluetooth 5) – RX....19
8.7 125-kbps Coded (Bluetooth 5) – TX....20
8.8 500-kbps Coded (Bluetooth 5) – RX....20
8.9 500-kbps Coded (Bluetooth 5) – TX....21
8.10 1-Mbps GFSK (Bluetooth low energy) – RX....22
8.11 1-Mbps GFSK (Bluetooth low energy) – TX....23
8.12 2-Mbps GFSK (Bluetooth 5) – RX....23
8.13 2-Mbps GFSK (Bluetooth 5) – TX....24
8.14 24-MHz Crystal Oscillator (XOSC_HF)....24
8.15 32.768-kHz Crystal Oscillator (XOSC_LF)....24
8.16 48-MHz RC Oscillator (RCOSC_HF)....25
8.17 32-kHz RC Oscillator (RCOSC_LF)....25
8.18 ADC Characteristics....25
8.19 Temperature Sensor....26
8.20 Battery Monitor....26
8.21 Continuous Time Comparator....27
8.22 Low-Power Clocked Comparator....27
8.23 Programmable Current Source....27
8.24 Synchronous Serial Interface (SSI)....28
8.25 DC Characteristics....29
8.26 Thermal Resistance Characteristics....30
8.27 Timing Requirements....30
8.28 Switching Characteristics....31
8.29 Typical Characteristics....32
9 Detailed Description....36
9.1 Overview....36
9.2 Functional Block Diagram....36
9.3 Main CPU....37
9.4 RF Core....37
9.5 Sensor Controller....38
9.6 Memory....39
9.7 Debug....39
9.8 Power Management....39
9.9 Clock Systems....40
9.10 General Peripherals and Modules....40
9.11 Voltage Supply Domains....42
9.12 System Architecture....42
10 Application, Implementation, and Layout....43
10.1 Application Information....43
10.2 5 × 5 External Differential (5XD) Application Circuit....45
10.3 4 × 4 External Single-ended (4XS) Application Circuit....47
11 Device and Documentation Support....49
11.1 Device Nomenclature....49
11.2 Tools and Software....50
11.3 Documentation Support....51
11.4 Texas Instruments Low-Power RF Website....51
11.5 Low-Power RF eNewsletter....51
11.6 Support Resources....51
11.7 Trademarks....51
11.8 Electrostatic Discharge Caution....51
11.9 Export Control Notice....51
11.10 Glossary....52
12 Mechanical, Packaging, and Orderable Information....53
12.1 Packaging Information....53

5 Revision History

NOTE: Page numbers for previous revisions may differ from page numbers in the current version.

Changes from Revision B (January 2018) to Revision C (September 2020)	Page
• Updated the numbering format for tables, figures, and cross-references throughout the document	1
• Changed intermodulation interferer frequencies in Section 8.12	23
• Changed Figure 8-20 in Section 8.29	32
• Changed IDLE value for Current in Section 9.8	39

Copyright © 2020 Texas Instruments Incorporated

6 Device Comparison

Table 6-1. Device Family Overview

Device	PHY Support	Flash (KB)	RAM (KB)	GPIO	Package[1]
CC2640R2Fxxx[2]	Bluetooth low energy (Normal, High Speed, Long Range)	128	20	31, 15, 14, 10	RGZ, RHB, YFV, RSM
CC2640F128xxx	Bluetooth low energy (Normal)	128	20	31, 15, 10	RGZ, RHB, RSM
CC2650F128xxx	Multi-Protocol[3]	128	20	31, 15, 10	RGZ, RHB, RSM
CC2630F128xxx	IEEE 802.15.4 (/6LoWPAN)	128	20	31, 15, 10	RGZ, RHB, RSM
CC2620F128xxx	IEEE 802.15.4 (RF4CE)	128	20	31, 10	RGZ, RSM

(1) Package designator replaces the xxx in device name to form a complete device name, RGZ is 7-mm × 7-mm VQFN48, RHB is 5-mm × 5-mm VQFN32, RSM is 4-mm × 4-mm VQFN32, and YFV is 2.7-mm × 2.7-mm DSBGA.
(2) CC2640R2Fxxx devices contain Bluetooth Low Energy Host & Controller libraries in ROM, leaving more of the 128KB Flash memory available for the customer application when used with supported BLE-Stack software protocol stack releases. Actual use of ROM and Flash memory by the protocol stack may vary depending on device software configuration. See www.ti.com for more details.
(3) The CC2650 device supports all PHYs and can be reflashed to run all the supported standards.

6.1 Related Products

TI's Wireless Connectivity
The wireless connectivity portfolio offers a wide selection of low-power RF solutions suitable for a broad range of applications. The offerings range from fully customized solutions to turn key offerings with pre-certified hardware and software (protocol).

TI's SimpleLink™ Sub-1 GHz Wireless MCUs
Long-range, low-power wireless connectivity solutions are offered in a wide range of
Sub-1 GHz ISM bands.

Companion Products Companion Products
Review products that are frequently purchased or used in conjunction with this product.

SimpleLink™ CC2640R2 Wireless MCU LaunchPad™ Development Kit
The CC2640R2 LaunchPad™ development kit brings easy Bluetooth® low energy (BLE) connection to the LaunchPad ecosystem with the SimpleLink ultra-low power CC26xx family of devices. Compared to the CC2650 LaunchPad, the CC2640R2 LaunchPad provides the following:

- More free flash memory for the user application in the CC2640R2 wireless MCU
- Out-of-the-box support for Bluetooth 4.2 specification
- 4× faster Over-the-Air download speed compared to Bluetooth 4.1

SimpleLink™ Bluetooth low energy/Multi-standard SensorTag
The new SensorTag IoT kit invites you to realize your cloud-connected product idea. The new SensorTag now includes 10 low-power MEMS sensors in a tiny red package. And it is expandable with DevPacks to make it easy to add your own sensors or actuators.

Reference Designs for CC2640
TI Designs Reference Design Library is a robust reference design library spanning analog, embedded processor and connectivity. Created by TI experts to help you jump-start your system design, all TI Designs include schematic or block diagrams, BOMs, and design files to speed your time to market. Search and download designs at ti.com/tidesigns.

7 Terminal Configuration and Functions

7.1 Pin Diagram – RGZ Package

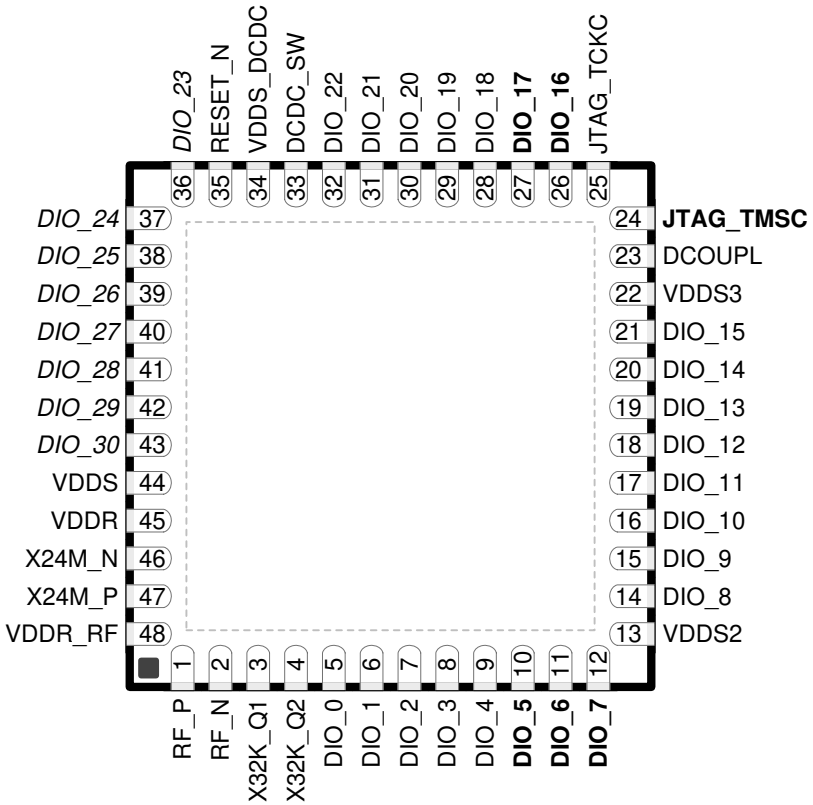

Figure 7-1. RGZ Package 48-Pin VQFN (7-mm × 7-mm) Pinout, 0.5-mm Pitch

I/O pins marked in Figure 7-1 in **bold** have high-drive capabilities; they are the following:

- Pin 10, DIO_5
- Pin 11, DIO_6
- Pin 12, DIO_7
- Pin 24, JTAG_TMSC
- Pin 26, DIO_16
- Pin 27, DIO_17

I/O pins marked in Figure 7-1 in *italics* have analog capabilities; they are the following:

- Pin 36, DIO_23
- Pin 37, DIO_24
- Pin 38, DIO_25
- Pin 39, DIO_26
- Pin 40, DIO_27
- Pin 41, DIO_28
- Pin 42, DIO_29
- Pin 43, DIO_30

Copyright © 2020 Texas Instruments Incorporated

7.2 Signal Descriptions – RGZ Package

Table 7-1. Signal Descriptions – RGZ Package

NAME	NO.	TYPE	DESCRIPTION
DCDC_SW	33	Power	Output from internal DC/DC[(1)]
DCOUPL	23	Power	1.27-V regulated digital-supply decoupling capacitor[(2)]
DIO_0	5	Digital I/O	GPIO, Sensor Controller
DIO_1	6	Digital I/O	GPIO, Sensor Controller
DIO_2	7	Digital I/O	GPIO, Sensor Controller
DIO_3	8	Digital I/O	GPIO, Sensor Controller
DIO_4	9	Digital I/O	GPIO, Sensor Controller
DIO_5	10	Digital I/O	GPIO, Sensor Controller, high-drive capability
DIO_6	11	Digital I/O	GPIO, Sensor Controller, high-drive capability
DIO_7	12	Digital I/O	GPIO, Sensor Controller, high-drive capability
DIO_8	14	Digital I/O	GPIO
DIO_9	15	Digital I/O	GPIO
DIO_10	16	Digital I/O	GPIO
DIO_11	17	Digital I/O	GPIO
DIO_12	18	Digital I/O	GPIO
DIO_13	19	Digital I/O	GPIO
DIO_14	20	Digital I/O	GPIO
DIO_15	21	Digital I/O	GPIO
DIO_16	26	Digital I/O	GPIO, JTAG_TDO, high-drive capability
DIO_17	27	Digital I/O	GPIO, JTAG_TDI, high-drive capability
DIO_18	28	Digital I/O	GPIO
DIO_19	29	Digital I/O	GPIO
DIO_20	30	Digital I/O	GPIO
DIO_21	31	Digital I/O	GPIO
DIO_22	32	Digital I/O	GPIO
DIO_23	36	Digital/Analog I/O	GPIO, Sensor Controller, Analog
DIO_24	37	Digital/Analog I/O	GPIO, Sensor Controller, Analog
DIO_25	38	Digital/Analog I/O	GPIO, Sensor Controller, Analog
DIO_26	39	Digital/Analog I/O	GPIO, Sensor Controller, Analog
DIO_27	40	Digital/Analog I/O	GPIO, Sensor Controller, Analog
DIO_28	41	Digital/Analog I/O	GPIO, Sensor Controller, Analog
DIO_29	42	Digital/Analog I/O	GPIO, Sensor Controller, Analog
DIO_30	43	Digital/Analog I/O	GPIO, Sensor Controller, Analog
JTAG_TMSC	24	Digital I/O	JTAG TMSC, high-drive capability
JTAG_TCKC	25	Digital I/O	JTAG TCKC[(3)]
RESET_N	35	Digital input	Reset, active-low. No internal pullup.
RF_P	1	RF I/O	Positive RF input signal to LNA during RX Positive RF output signal to PA during TX
RF_N	2	RF I/O	Negative RF input signal to LNA during RX Negative RF output signal to PA during TX
VDDR	45	Power	1.7-V to 1.95-V supply, typically connect to output of internal DC/DC[(2) (4)]
VDDR_RF	48	Power	1.7-V to 1.95-V supply, typically connect to output of internal DC/DC[(2) (5)]

Copyright © 2020 Texas Instruments Incorporated

Table 7-1. Signal Descriptions – RGZ Package (continued)

NAME	NO.	TYPE	DESCRIPTION
VDDS	44	Power	1.8-V to 3.8-V main chip supply(1)
VDDS2	13	Power	1.8-V to 3.8-V DIO supply(1)
VDDS3	22	Power	1.8-V to 3.8-V DIO supply(1)
VDDS_DCDC	34	Power	1.8-V to 3.8-V DC/DC supply
X32K_Q1	3	Analog I/O	32-kHz crystal oscillator pin 1
X32K_Q2	4	Analog I/O	32-kHz crystal oscillator pin 2
X24M_N	46	Analog I/O	24-MHz crystal oscillator pin 1
X24M_P	47	Analog I/O	24-MHz crystal oscillator pin 2
EGP		Power	Ground – Exposed Ground Pad

(1) For more details, see the technical reference manual (listed in Section 11.3).
(2) Do not supply external circuitry from this pin.
(3) For design consideration regarding noise immunity for this pin, see the JTAG Interface chapter in the *CC13x0, CC26x0 SimpleLink™ Wireless MCU Technical Reference Manual*
(4) If internal DC/DC is not used, this pin is supplied internally from the main LDO.
(5) If internal DC/DC is not used, this pin must be connected to VDDR for supply from the main LDO.

Copyright © 2020 Texas Instruments Incorporated

7.3 Pin Diagram – RHB Package

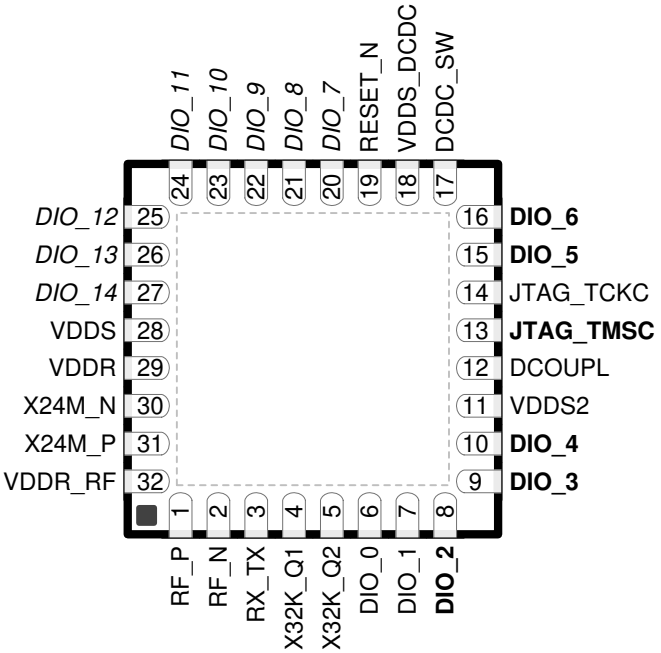

Figure 7-2. RHB Package 32-Pin VQFN (5-mm × 5-mm) Pinout, 0.5-mm Pitch

I/O pins marked in Figure 7-2 in **bold** have high-drive capabilities; they are the following:

- Pin 8, DIO_2
- Pin 9, DIO_3
- Pin 10, DIO_4
- Pin 13, JTAG_TMSC
- Pin 15, DIO_5
- Pin 16, DIO_6

I/O pins marked in Figure 7-2 in *italics* have analog capabilities; they are the following:

- Pin 20, DIO_7
- Pin 21, DIO_8
- Pin 22, DIO_9
- Pin 23, DIO_10
- Pin 24, DIO_11
- Pin 25, DIO_12
- Pin 26, DIO_13
- Pin 27, DIO_14

7.4 Signal Descriptions – RHB Package

Table 7-2. Signal Descriptions – RHB Package

NAME	NO.	TYPE	DESCRIPTION
DCDC_SW	17	Power	Output from internal DC/DC[(1)]
DCOUPL	12	Power	1.27-V regulated digital-supply decoupling[(2)]
DIO_0	6	Digital I/O	GPIO, Sensor Controller
DIO_1	7	Digital I/O	GPIO, Sensor Controller
DIO_2	8	Digital I/O	GPIO, Sensor Controller, high-drive capability
DIO_3	9	Digital I/O	GPIO, Sensor Controller, high-drive capability
DIO_4	10	Digital I/O	GPIO, Sensor Controller, high-drive capability
DIO_5	15	Digital I/O	GPIO, High drive capability, JTAG_TDO
DIO_6	16	Digital I/O	GPIO, High drive capability, JTAG_TDI
DIO_7	20	Digital/Analog I/O	GPIO, Sensor Controller, Analog
DIO_8	21	Digital/Analog I/O	GPIO, Sensor Controller, Analog
DIO_9	22	Digital/Analog I/O	GPIO, Sensor Controller, Analog
DIO_10	23	Digital/Analog I/O	GPIO, Sensor Controller, Analog
DIO_11	24	Digital/Analog I/O	GPIO, Sensor Controller, Analog
DIO_12	25	Digital/Analog I/O	GPIO, Sensor Controller, Analog
DIO_13	26	Digital/Analog I/O	GPIO, Sensor Controller, Analog
DIO_14	27	Digital/Analog I/O	GPIO, Sensor Controller, Analog
JTAG_TMSC	13	Digital I/O	JTAG TMSC, high-drive capability
JTAG_TCKC	14	Digital I/O	JTAG TCKC[(3)]
RESET_N	19	Digital input	Reset, active-low. No internal pullup.
RF_N	2	RF I/O	Negative RF input signal to LNA during RX Negative RF output signal to PA during TX
RF_P	1	RF I/O	Positive RF input signal to LNA during RX Positive RF output signal to PA during TX
RX_TX	3	RF I/O	Optional bias pin for the RF LNA
VDDR	29	Power	1.7-V to 1.95-V supply, typically connect to output of internal DC/DC[(4) (2)]
VDDR_RF	32	Power	1.7-V to 1.95-V supply, typically connect to output of internal DC/DC[(2) (5)]
VDDS	28	Power	1.8-V to 3.8-V main chip supply[(1)]
VDDS2	11	Power	1.8-V to 3.8-V GPIO supply[(1)]
VDDS_DCDC	18	Power	1.8-V to 3.8-V DC/DC supply
X32K_Q1	4	Analog I/O	32-kHz crystal oscillator pin 1
X32K_Q2	5	Analog I/O	32-kHz crystal oscillator pin 2
X24M_N	30	Analog I/O	24-MHz crystal oscillator pin 1
X24M_P	31	Analog I/O	24-MHz crystal oscillator pin 2
EGP		Power	Ground – Exposed Ground Pad

(1) See technical reference manual (listed in Section 11.3) for more details.
(2) Do not supply external circuitry from this pin.
(3) For design consideration regarding noise immunity for this pin, see the JTAG Interface chapter in the *CC13x0, CC26x0 SimpleLink™ Wireless MCU Technical Reference Manual*
(4) If internal DC/DC is not used, this pin is supplied internally from the main LDO.
(5) If internal DC/DC is not used, this pin must be connected to VDDR for supply from the main LDO.

Copyright © 2020 Texas Instruments Incorporated

7.5 Pin Diagram – YFV (Chip Scale, DSBGA) Package

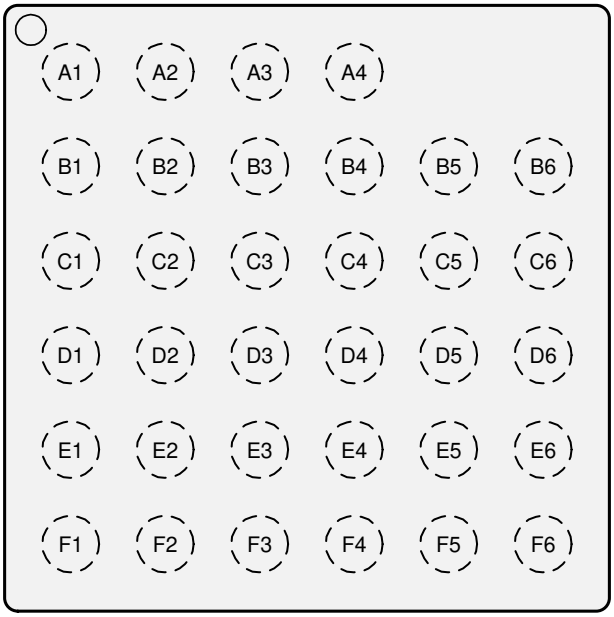

Figure 7-3. YFV (2.7-mm × 2.7-mm) Pinout, Top View

7.6 Signal Descriptions – YFV (Chip Scale, DSBGA) Package

Table 7-3. Signal Descriptions – YFV Package

NAME	NO.	TYPE	DESCRIPTION
DCDC_SW	D1	Power	Output from internal DC/DC[(1)]
DCOUPL	F3	Power	1.27-V regulated digital-supply decoupling[(2)]
DIO_0	C5	Digital I/O	GPIO, Sensor Controller
DIO_1	F6	Digital I/O	GPIO, Sensor Controller
DIO_2	D5	Digital I/O	GPIO, Sensor Controller, high-drive capability
DIO_3	E5	Digital I/O	GPIO, Sensor Controller, high-drive capability
DIO_4	F5	Digital I/O	GPIO, Sensor Controller, high-drive capability
DIO_5	E3	Digital I/O	GPIO, High-drive capability, JTAG_TDO
DIO_6	F1	Digital I/O	GPIO, High-drive capability, JTAG_TDI
DIO_7	D2	Digital/Analog I/O	GPIO, Sensor Controller, Analog
DIO_8	D3	Digital/Analog I/O	GPIO, Sensor Controller, Analog
DIO_9	A1	Digital/Analog I/O	GPIO, Sensor Controller, Analog
DIO_10	C2	Digital/Analog I/O	GPIO, Sensor Controller, Analog
DIO_11	B2	Digital/Analog I/O	GPIO, Sensor Controller, Analog
DIO_12	D4	Digital/Analog I/O	GPIO, Sensor Controller, Analog
DIO_13	B3	Digital/Analog I/O	GPIO, Sensor Controller, Analog
JTAG_TMSC	E4	Digital I/O	JTAG TMSC, high-drive capability
JTAG_TCKC	F2	Digital I/O	JTAG TCKC[(3)]
RESET_N	E2	Digital input	Reset, active-low. No internal pullup.

Copyright © 2020 Texas Instruments Incorporated

Table 7-3. Signal Descriptions – YFV Package (continued)

NAME	NO.	TYPE	DESCRIPTION
RF_N	B6	RF I/O	Negative RF input signal to LNA during RX Negative RF output signal to PA during TX
RF_P	B5	RF I/O	Positive RF input signal to LNA during RX Positive RF output signal to PA during TX
VDDR	A3	Power	1.7-V to 1.95-V supply, typically connect to output of internal DC/DC(4) (2)
VDDR_RF	B4	Power	1.7-V to 1.95-V supply, typically connect to output of internal DC/DC(5) (2)
VDDS	A2	Power	1.8-V to 3.8-V main chip supply(1)
VDDS2	F4	Power	1.8-V to 3.8-V GPIO supply(1)
VDDS_DCDC	C1	Power	1.8-V to 3.8-V DC/DC supply
X32K_Q1	D6	Analog I/O	32-kHz crystal oscillator pin 1
X32K_Q2	E6	Analog I/O	32-kHz crystal oscillator pin 2
X24M_N	C3	Analog I/O	24-MHz crystal oscillator pin 1
X24M_P	C4	Analog I/O	24-MHz crystal oscillator pin 2
GND	A4, B1, C6, E1	Power	Ground

(1) For more details, see the technical reference manual (listed in Section 11.3).
(2) Do not supply external circuitry from this pin.
(3) For design consideration regarding noise immunity for this pin, see the JTAG Interface chapter in the *CC13x0, CC26x0 SimpleLink™ Wireless MCU Technical Reference Manual*
(4) If internal DC/DC is not used, this pin is supplied internally from the main LDO.
(5) If internal DC/DC is not used, this pin must be connected to VDDR for supply from the main LDO.

Copyright © 2020 Texas Instruments Incorporated

7.7 Pin Diagram – RSM Package

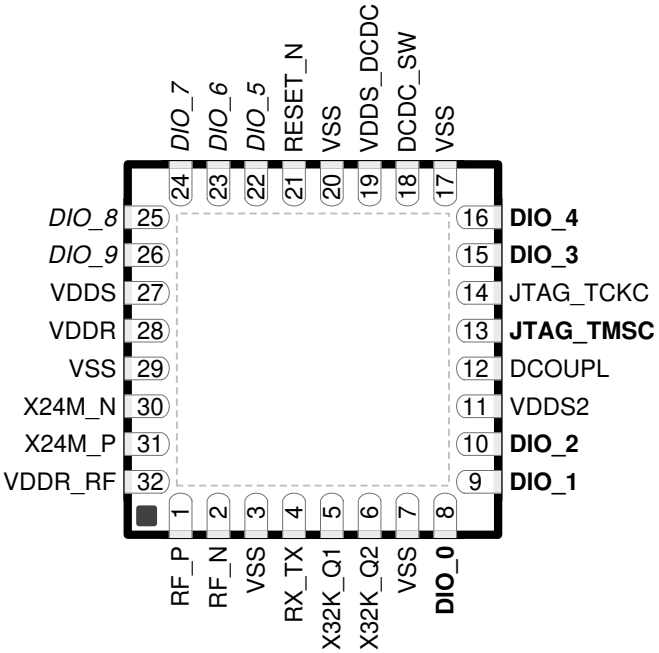

Figure 7-4. RSM Package 32-Pin VQFN (4-mm × 4-mm) Pinout, 0.4-mm Pitch

I/O pins marked in Figure 7-4 in **bold** have high-drive capabilities; they are as follows:

- Pin 8, DIO_0
- Pin 9, DIO_1
- Pin 10, DIO_2
- Pin 13, JTAG_TMSC
- Pin 15, DIO_3
- Pin 16, DIO_4

I/O pins marked in Figure 7-4 in *italics* have analog capabilities; they are as follows:

- Pin 22, DIO_5
- Pin 23, DIO_6
- Pin 24, DIO_7
- Pin 25, DIO_8
- Pin 26, DIO_9

7.8 Signal Descriptions – RSM Package

Table 7-4. Signal Descriptions – RSM Package

NAME	NO.	TYPE	DESCRIPTION
DCDC_SW	18	Power	Output from internal DC/DC.[1]. Tie to ground for external regulator mode (1.7-V to 1.95-V operation)
DCOUPL	12	Power	1.27-V regulated digital-supply decoupling capacitor[2]
DIO_0	8	Digital I/O	GPIO, Sensor Controller, high-drive capability
DIO_1	9	Digital I/O	GPIO, Sensor Controller, high-drive capability
DIO_2	10	Digital I/O	GPIO, Sensor Controller, high-drive capability
DIO_3	15	Digital I/O	GPIO, High-drive capability, JTAG_TDO
DIO_4	16	Digital I/O	GPIO, High-drive capability, JTAG_TDI
DIO_5	22	Digital/Analog I/O	GPIO, Sensor Controller, Analog
DIO_6	23	Digital/Analog I/O	GPIO, Sensor Controller, Analog
DIO_7	24	Digital/Analog I/O	GPIO, Sensor Controller, Analog
DIO_8	25	Digital/Analog I/O	GPIO, Sensor Controller, Analog
DIO_9	26	Digital/Analog I/O	GPIO, Sensor Controller, Analog
JTAG_TMSC	13	Digital I/O	JTAG TMSC
JTAG_TCKC	14	Digital I/O	JTAG TCKC[3]
RESET_N	21	Digital Input	Reset, active-low. No internal pullup.
RF_N	2	RF I/O	Negative RF input signal to LNA during RX Negative RF output signal to PA during TX
RF_P	1	RF I/O	Positive RF input signal to LNA during RX Positive RF output signal to PA during TX
RX_TX	4	RF I/O	Optional bias pin for the RF LNA
VDDR	28	Power	1.7-V to 1.95-V supply, typically connect to output of internal DC/DC.[2] [4]
VDDR_RF	32	Power	1.7-V to 1.95-V supply, typically connect to output of internal DC/DC[2] [5]
VDDS	27	Power	1.8-V to 3.8-V main chip supply[1]
VDDS2	11	Power	1.8-V to 3.8-V GPIO supply[1]
VDDS_DCDC	19	Power	1.8-V to 3.8-V DC/DC supply. Tie to ground for external regulator mode (1.7-V to 1.95-V operation).
VSS	3, 7, 17, 20, 29	Power	Ground
X32K_Q1	5	Analog I/O	32-kHz crystal oscillator pin 1
X32K_Q2	6	Analog I/O	32-kHz crystal oscillator pin 2
X24M_N	30	Analog I/O	24-MHz crystal oscillator pin 1
X24M_P	31	Analog I/O	24-MHz crystal oscillator pin 2
EGP		Power	Ground – Exposed Ground Pad

(1) See technical reference manual (listed in Section 11.3) for more details.
(2) Do not supply external circuitry from this pin.
(3) For design consideration regarding noise immunity for this pin, see the JTAG Interface chapter in the *CC13x0, CC26x0 SimpleLink™ Wireless MCU Technical Reference Manual*
(4) If internal DC/DC is not used, this pin is supplied internally from the main LDO.
(5) If internal DC/DC is not used, this pin must be connected to VDDR for supply from the main LDO.

Copyright © 2020 Texas Instruments Incorporated

8 Specifications

8.1 Absolute Maximum Ratings

over operating free-air temperature range (unless otherwise noted)[1] [2]

		MIN	MAX	UNIT
Supply voltage (VDDS, VDDS2, and VDDS3)	VDDR supplied by internal DC/DC regulator or internal GLDO. VDDS_DCDC connected to VDDS on PCB	–0.3	4.1	V
Supply voltage (VDDS[3] and VDDR)	External regulator mode (VDDS and VDDR pins connected on PCB)	–0.3	2.25	V
Voltage on any digital pin[4] [5]		–0.3	VDDSx + 0.3, max 4.1	V
Voltage on crystal oscillator pins, X32K_Q1, X32K_Q2, X24M_N and X24M_P		–0.3	VDDR + 0.3, max 2.25	V
Voltage on ADC input (V_{in})	Voltage scaling enabled	–0.3	VDDS	V
	Voltage scaling disabled, internal reference	–0.3	1.49	
	Voltage scaling disabled, VDDS as reference	–0.3	VDDS / 2.9	
Input RF level			5	dBm
T_{stg}	Storage temperature	–40	150	°C

(1) All voltage values are with respect to ground, unless otherwise noted.
(2) Stresses beyond those listed under *Absolute Maximum Ratings* may cause permanent damage to the device. These are stress ratings only, and functional operation of the device at these or any other conditions beyond those indicated under *Recommended Operating Conditions* is not implied. Exposure to absolute-maximum-rated conditions for extended periods may affect device reliability.
(3) In external regulator mode, VDDS2 and VDDS3 must be at the same potential as VDDS.
(4) Including analog-capable DIO.
(5) Each pin is referenced to a specific VDDSx (VDDS, VDDS2 or VDDS3). For a pin-to-VDDS mapping table, see Table 9-3 .

8.2 ESD Ratings

				VALUE	UNIT
V_{ESD}	Electrostatic discharge RSM, RHB, and RGZ packages	Human body model (HBM), per ANSI/ESDA/JEDEC JS001[1]	All pins	±2500	V
		Charged device model (CDM), per JESD22-C101[2]	RF pins	±500	
			Non-RF pins	±500	
V_{ESD}	Electrostatic discharge YFV package	Human body model (HBM), per ANSI/ESDA/JEDEC JS001[1]	All pins	±1500	V
		Charged device model (CDM), per JESD22-C101[2]	RF pins	±500	
			Non-RF pins	±500	

(1) JEDEC document JEP155 states that 500-V HBM allows safe manufacturing with a standard ESD control process.
(2) JEDEC document JEP157 states that 250-V CDM allows safe manufacturing with a standard ESD control process.

8.3 Recommended Operating Conditions

over operating free-air temperature range (unless otherwise noted)

			MIN	MAX	UNIT
Ambient temperature			–40	85	°C
Operating supply voltage (VDDS and VDDR), external regulator mode	For operation in 1.8-V systems (VDDS and VDDR pins connected on PCB, internal DC/DC cannot be used)		1.7	1.95	V
Operating supply voltage VDDS	For operation in battery-powered and 3.3-V systems (internal DC/DC can be used to minimize power consumption)		1.8	3.8	V
Operating supply voltages VDDS2 and VDDS3		VDDS < 2.7 V	1.8	3.8	V
Operating supply voltages VDDS2 and VDDS3		VDDS ≥ 2.7 V	1.9	3.8	V

8.4 Power Consumption Summary

Measured on the TI CC2650EM-5XD reference design with T_c = 25°C, V_{DDS} = 3.0 V with internal DC/DC converter, unless otherwise noted.

PARAMETER		TEST CONDITIONS	MIN	TYP	MAX	UNIT
I_{core}	Core current consumption	Reset. RESET_N pin asserted or VDDS below Power-on-Reset threshold		100		nA
		Shutdown. No clocks running, no retention		150		nA
		Standby. With RTC, CPU, RAM and (partial) register retention. RCOSC_LF		1.1		µA
		Standby. With RTC, CPU, RAM and (partial) register retention. XOSC_LF		1.3		µA
		Standby. With Cache, RTC, CPU, RAM and (partial) register retention. RCOSC_LF		2.8		µA
		Standby. With Cache, RTC, CPU, RAM and (partial) register retention. XOSC_LF		3.0		µA
		Idle. Supply Systems and RAM powered.		650		µA
		Active. Core running CoreMark		1.45 mA + 31 µA/MHz		
		Radio RX (1)		5.9		mA
		Radio RX(2)		6.1		mA
		Radio TX, 0-dBm output power(1)		6.1		mA
		Radio TX, 5-dBm output power(2)		9.1		mA
Peripheral Current Consumption (Adds to core current I_{core} for each peripheral unit activated) (3)						
I_{peri}	Peripheral power domain	Delta current with domain enabled		50		µA
	Serial power domain	Delta current with domain enabled		13		µA
	RF Core	Delta current with power domain enabled, clock enabled, RF core idle		237		µA
	µDMA	Delta current with clock enabled, module idle		130		µA
	Timers	Delta current with clock enabled, module idle		113		µA
	I^2C	Delta current with clock enabled, module idle		12		µA
	I2S	Delta current with clock enabled, module idle		36		µA
	SSI	Delta current with clock enabled, module idle		93		µA
	UART	Delta current with clock enabled, module idle		164		µA

(1) Single-ended RF mode is optimized for size and power consumption. Measured on CC2650EM-4XS.
(2) Differential RF mode is optimized for RF performance. Measured on CC2650EM-5XD.

Copyright © 2020 Texas Instruments Incorporated

(3) I_{peri} is not supported in Standby or Shutdown.

8.5 General Characteristics

T_c = 25°C, V_{DDS} = 3.0 V, unless otherwise noted.

PARAMETER	TEST CONDITIONS	MIN	TYP	MAX	UNIT
FLASH MEMORY					
Supported flash erase cycles before failure(1)		100			k Cycles
Maximum number of write operations per row before erase(2)				83	write operations
Flash retention	105°C	11.4			Years at 105°C
Flash page/sector erase current	Average delta current		12.6		mA
Flash page/sector size			4		KB
Flash write current	Average delta current, 4 bytes at a time		8.15		mA
Flash page/sector erase time(3)			8		ms
Flash write time(3)	4 bytes at a time		8		µs

(1) Aborting flash during erase or program modes is not a safe operation.
(2) Each row is 2048 bits (or 256 Bytes) wide.
(3) This number is dependent on Flash aging and will increase over time and erase cycles.

8.6 125-kbps Coded (Bluetooth 5) – RX

Measured on the TI CC2650EM-5XD reference design with T_c = 25°C, V_{DDS} = 3.0 V, f_{RF} = 2440 MHz, unless otherwise noted.

PARAMETER	TEST CONDITIONS	MIN	TYP	MAX	UNIT
Receiver sensitivity	Differential mode. Measured at the CC2650EM-5XD SMA connector, BER = 10^{-3}		–103		dBm
Receiver saturation	Differential mode. Measured at the CC2650EM-5XD SMA connector, BER = 10^{-3}		>5		dBm
Frequency error tolerance	Difference between the incoming carrier frequency and the internally generated carrier frequency	–260		310	kHz
Data rate error tolerance	Difference between incoming data rate and the internally generated data rate (37-byte packets)	–260		260	ppm
Data rate error tolerance	Difference between incoming data rate and the internally generated data rate (255-byte packets)	–140		140	ppm
Co-channel rejection (1)	Wanted signal at –79 dBm, modulated interferer in channel, BER = 10^{-3}		–3		dB
Selectivity, ±1 MHz (1)	Wanted signal at –79 dBm, modulated interferer at ±1 MHz, BER = 10^{-3}		9 / 5(2)		dB
Selectivity, ±2 MHz (1)	Wanted signal at –79 dBm, modulated interferer at ±2 MHz, Image frequency is at –2 MHz, BER = 10^{-3}		43 / 32(2)		dB
Selectivity, ±3 MHz (1)	Wanted signal at –79 dBm, modulated interferer at ±3 MHz, BER = 10^{-3}		47 / 42(2)		dB
Selectivity, ±4 MHz (1)	Wanted signal at –79 dBm, modulated interferer at ±4 MHz, BER = 10^{-3}		46 / 47(2)		dB
Selectivity, ±6 MHz (1)	Wanted signal at –79 dBm, modulated interferer at ±6 MHz, BER = 10^{-3}		49 / 46(2)		dB
Alternate channel rejection, ±7 MHz(1)	Wanted signal at –79 dBm, modulated interferer at ≥ ±7 MHz, BER = 10^{-3}		50 / 47(2)		dB
Selectivity, image frequency(1)	Wanted signal at –79 dBm, modulated interferer at image frequency, BER = 10^{-3}		32		dB

Measured on the TI CC2650EM-5XD reference design with T_c = 25°C, V_{DDS} = 3.0 V, f_{RF} = 2440 MHz, unless otherwise noted.

PARAMETER	TEST CONDITIONS	MIN	TYP	MAX	UNIT
Selectivity, image frequency ±1 MHz[(1)]	Note that Image frequency + 1 MHz is the Co-channel –1 MHz. Wanted signal at –79 dBm, modulated interferer at ±1 MHz from image frequency, BER = 10^{-3}		5 / 32[(2)]		dB
Blocker rejection, ±8 MHz and above[(1)]	Wanted signal at –79 dBm, modulated interferer at ±8 MHz and above, BER = 10^{-3}		>46		dB
Out-of-band blocking [(3)]	30 MHz to 2000 MHz		–40		dBm
Out-of-band blocking	2003 MHz to 2399 MHz		–19		dBm
Out-of-band blocking	2484 MHz to 2997 MHz		–22		dBm
Intermodulation	Wanted signal at 2402 MHz, –76 dBm. Two interferers at 2405 and 2408 MHz respectively, at the given power level		–42		dBm

(1) Numbers given as I/C dB.
(2) X / Y, where X is +N MHz and Y is –N MHz.
(3) Excluding one exception at F_{wanted} / 2, per Bluetooth Specification.

8.7 125-kbps Coded (Bluetooth 5) – TX

Measured on the TI CC2650EM-5XD reference design with T_c = 25°C, V_{DDS} = 3.0 V, f_{RF} = 2440 MHz, unless otherwise noted.

PARAMETER	TEST CONDITIONS	MIN	TYP	MAX	UNIT
Output power, highest setting	Differential mode, delivered to a single-ended 50-Ω load through a balun		5		dBm
Output power, highest setting	Measured on CC2650EM-4XS, delivered to a single-ended 50-Ω load		2		dBm
Output power, lowest setting	Delivered to a single-ended 50-Ω load through a balun		–21		dBm
Spurious emission conducted measurement[(1)]	f < 1 GHz, outside restricted bands		–43		dBm
	f < 1 GHz, restricted bands ETSI		–65		dBm
	f < 1 GHz, restricted bands FCC		–71		dBm
	f > 1 GHz, including harmonics		–46		dBm

(1) Suitable for systems targeting compliance with worldwide radio-frequency regulations ETSI EN 300 328 and EN 300 440 Class 2 (Europe), FCC CFR47 Part 15 (US), and ARIB STD-T66 (Japan).

8.8 500-kbps Coded (Bluetooth 5) – RX

Measured on the TI CC2650EM-5XD reference design with T_c = 25°C, V_{DDS} = 3.0 V, f_{RF} = 2440 MHz, unless otherwise noted.

PARAMETER	TEST CONDITIONS	MIN	TYP	MAX	UNIT
Receiver sensitivity	Differential mode. Measured at the CC2650EM-5XD SMA connector, BER = 10^{-3}		–101		dBm
Receiver saturation	Differential mode. Measured at the CC2650EM-5XD SMA connector, BER = 10^{-3}		>5		dBm
Frequency error tolerance	Difference between the incoming carrier frequency and the internally generated carrier frequency	–240		240	kHz
Data rate error tolerance	Difference between incoming data rate and the internally generated data rate (37-byte packets)	–500		500	ppm
Data rate error tolerance	Difference between incoming data rate and the internally generated data rate (255-byte packets)	–310		330	ppm
Co-channel rejection [(1)]	Wanted signal at –72 dBm, modulated interferer in channel, BER = 10^{-3}		–5		dB
Selectivity, ±1 MHz [(1)]	Wanted signal at –72 dBm, modulated interferer at ±1 MHz, BER = 10^{-3}		9 / 5[(2)]		dB

Copyright © 2020 Texas Instruments Incorporated

Measured on the TI CC2650EM-5XD reference design with T_c = 25°C, V_{DDS} = 3.0 V, f_{RF} = 2440 MHz, unless otherwise noted.

PARAMETER	TEST CONDITIONS	MIN	TYP	MAX	UNIT
Selectivity, ±2 MHz (1)	Wanted signal at –72 dBm, modulated interferer at ±2 MHz, Image frequency is at –2 MHz, BER = 10^{-3}		41 / 31(2)		dB
Selectivity, ±3 MHz (1)	Wanted signal at –72 dBm, modulated interferer at ±3 MHz, BER = 10^{-3}		44 / 41(2)		dB
Selectivity, ±4 MHz (1)	Wanted signal at –72 dBm, modulated interferer at ±4 MHz, BER = 10^{-3}		44 / 44(2)		dB
Selectivity, ±6 MHz (1)	Wanted signal at –72 dBm, modulated interferer at ±6 MHz, BER = 10^{-3}		44 / 44(2)		dB
Alternate channel rejection, ±7 MHz(1)	Wanted signal at –72 dBm, modulated interferer at ≥ ±7 MHz, BER = 10^{-3}		44 / 44(2)		dB
Selectivity, image frequency(1)	Wanted signal at –72 dBm, modulated interferer at image frequency, BER = 10^{-3}		31		dB
Selectivity, image frequency ±1 MHz(1)	Note that Image frequency + 1 MHz is the Co-channel –1 MHz. Wanted signal at –72 dBm, modulated interferer at ±1 MHz from image frequency, BER = 10^{-3}		5 / 41(2)		dB
Blocker rejection, ±8 MHz and above(1)	Wanted signal at –72 dBm, modulated interferer at ±8 MHz and above, BER = 10^{-3}		44		dB
Out-of-band blocking (3)	30 MHz to 2000 MHz		–35		dBm
Out-of-band blocking	2003 MHz to 2399 MHz		–19		dBm
Out-of-band blocking	2484 MHz to 2997 MHz		–19		dBm
Intermodulation	Wanted signal at 2402 MHz, –69 dBm. Two interferers at 2405 and 2408 MHz respectively, at the given power level		–37		dBm

(1) Numbers given as I/C dB.
(2) X / Y, where X is +N MHz and Y is –N MHz.
(3) Excluding one exception at F_{wanted} / 2, per Bluetooth Specification.

8.9 500-kbps Coded (Bluetooth 5) – TX

Measured on the TI CC2650EM-5XD reference design with T_c = 25°C, V_{DDS} = 3.0 V, f_{RF} = 2440 MHz, unless otherwise noted.

PARAMETER	TEST CONDITIONS	MIN	TYP	MAX	UNIT
Output power, highest setting	Differential mode, delivered to a single-ended 50-Ω load through a balun		5		dBm
Output power, highest setting	Measured on CC2650EM-4XS, delivered to a single-ended 50-Ω load		2		dBm
Output power, lowest setting	Delivered to a single-ended 50-Ω load through a balun		–21		dBm
Spurious emission conducted measurement(1)	f < 1 GHz, outside restricted bands		–43		dBm
	f < 1 GHz, restricted bands ETSI		–65		dBm
	f < 1 GHz, restricted bands FCC		–71		dBm
	f > 1 GHz, including harmonics		–46		dBm

(1) Suitable for systems targeting compliance with worldwide radio-frequency regulations ETSI EN 300 328 and EN 300 440 Class 2 (Europe), FCC CFR47 Part 15 (US), and ARIB STD-T66 (Japan).

Copyright © 2020 Texas Instruments Incorporated

8.10 1-Mbps GFSK (Bluetooth low energy) – RX

Measured on the TI CC2650EM-5XD reference design with T_c = 25°C, V_{DDS} = 3.0 V, f_{RF} = 2440 MHz, unless otherwise noted.

PARAMETER	TEST CONDITIONS	MIN	TYP	MAX	UNIT
Receiver sensitivity	Differential mode. Measured at the CC2650EM-5XD SMA connector, BER = 10^{-3}		–97		dBm
Receiver sensitivity	Single-ended mode. Measured on CC2650EM-4XS, at the SMA connector, BER = 10^{-3}		–96		dBm
Receiver saturation	Differential mode. Measured at the CC2650EM-5XD SMA connector, BER = 10^{-3}		4		dBm
Receiver saturation	Single-ended mode. Measured on CC2650EM-4XS, at the SMA connector, BER = 10^{-3}		0		dBm
Frequency error tolerance	Difference between the incoming carrier frequency and the internally generated carrier frequency	–350		350	kHz
Data rate error tolerance	Difference between incoming data rate and the internally generated data rate	–750		750	ppm
Co-channel rejection[(1)]	Wanted signal at –67 dBm, modulated interferer in channel, BER = 10^{-3}		–6		dB
Selectivity, ±1 MHz[(1)]	Wanted signal at –67 dBm, modulated interferer at ±1 MHz, BER = 10^{-3}		7 / 3[(2)]		dB
Selectivity, ±2 MHz[(1)]	Wanted signal at –67 dBm, modulated interferer at ±2 MHz, BER = 10^{-3}		34 / 25[(2)]		dB
Selectivity, ±3 MHz[(1)]	Wanted signal at –67 dBm, modulated interferer at ±3 MHz, BER = 10^{-3}		38 / 26[(2)]		dB
Selectivity, ±4 MHz[(1)]	Wanted signal at –67 dBm, modulated interferer at ±4 MHz, BER = 10^{-3}		42 / 29[(2)]		dB
Selectivity, ±5 MHz or more[(1)]	Wanted signal at –67 dBm, modulated interferer at ≥ ±5 MHz, BER = 10^{-3}		32		dB
Selectivity, image frequency[(1)]	Wanted signal at –67 dBm, modulated interferer at image frequency, BER = 10^{-3}		25		dB
Selectivity, image frequency ±1 MHz[(1)]	Wanted signal at –67 dBm, modulated interferer at ±1 MHz from image frequency, BER = 10^{-3}		3 / 26[(2)]		dB
Out-of-band blocking [(3)]	30 MHz to 2000 MHz		–20		dBm
Out-of-band blocking	2003 MHz to 2399 MHz		–5		dBm
Out-of-band blocking	2484 MHz to 2997 MHz		–8		dBm
Out-of-band blocking	3000 MHz to 12.75 GHz		–10		dBm
Intermodulation	Wanted signal at 2402 MHz, –64 dBm. Two interferers at 2405 and 2408 MHz respectively, at the given power level		–34		dBm
Spurious emissions, 30 to 1000 MHz	Conducted measurement in a 50-Ω single-ended load. Suitable for systems targeting compliance with EN 300 328, EN 300 440 class 2, FCC CFR47, Part 15 and ARIB STD-T-66		–71		dBm
Spurious emissions, 1 to 12.75 GHz	Conducted measurement in a 50-Ω single-ended load. Suitable for systems targeting compliance with EN 300 328, EN 300 440 class 2, FCC CFR47, Part 15 and ARIB STD-T-66		–62		dBm
RSSI dynamic range			70		dB
RSSI accuracy			±4		dB

(1) Numbers given as I/C dB.
(2) X / Y, where X is +N MHz and Y is –N MHz.
(3) Excluding one exception at F_{wanted} / 2, per Bluetooth Specification.

Copyright © 2020 Texas Instruments Incorporated

8.11 1-Mbps GFSK (Bluetooth low energy) – TX

Measured on the TI CC2650EM-5XD reference design with T_c = 25°C, V_{DDS} = 3.0 V, f_{RF} = 2440 MHz, unless otherwise noted.

PARAMETER	TEST CONDITIONS	MIN	TYP	MAX	UNIT
Output power, highest setting	Differential mode, delivered to a single-ended 50-Ω load through a balun		5		dBm
Output power, highest setting	Measured on CC2650EM-4XS, delivered to a single-ended 50-Ω load		2		dBm
Output power, lowest setting	Delivered to a single-ended 50-Ω load through a balun		–21		dBm
Spurious emission conducted measurement(1)	f < 1 GHz, outside restricted bands		–43		dBm
	f < 1 GHz, restricted bands ETSI		–65		dBm
	f < 1 GHz, restricted bands FCC		–71		dBm
	f > 1 GHz, including harmonics		–46		dBm

(1) Suitable for systems targeting compliance with worldwide radio-frequency regulations ETSI EN 300 328 and EN 300 440 Class 2 (Europe), FCC CFR47 Part 15 (US), and ARIB STD-T66 (Japan).

8.12 2-Mbps GFSK (Bluetooth 5) – RX

Measured on the TI CC2650EM-5XD reference design with T_c = 25°C, V_{DDS} = 3.0 V, f_{RF} = 2440 MHz, unless otherwise noted.

PARAMETER	TEST CONDITIONS	MIN	TYP	MAX	UNIT
Receiver sensitivity	Differential mode. Measured at the CC2650EM-5XD SMA connector, BER = 10^{-3}		–91		dBm
Receiver saturation	Differential mode. Measured at the CC2650EM-5XD SMA connector, BER = 10^{-3}		3		dBm
Frequency error tolerance	Difference between the incoming carrier frequency and the internally generated carrier frequency	–300		500	kHz
Data rate error tolerance	Difference between incoming data rate and the internally generated data rate	–1000		1000	ppm
Co-channel rejection(1)	Wanted signal at –67 dBm, modulated interferer in channel, BER = 10^{-3}		–7		dB
Selectivity, ±2 MHz(1)	Wanted signal at –67 dBm, modulated interferer at ±2 MHz, Image frequency is at –2 MHz BER = 10^{-3}		8 / 4(2)		dB
Selectivity, ±4 MHz(1)	Wanted signal at –67 dBm, modulated interferer at ±4 MHz, BER = 10^{-3}		31 / 26(2)		dB
Selectivity, ±6 MHz(1)	Wanted signal at –67 dBm, modulated interferer at ±6 MHz, BER = 10^{-3}		37 / 38(2)		dB
Alternate channel rejection, ±7 MHz(1)	Wanted signal at –67 dBm, modulated interferer at ≥ ±7 MHz, BER = 10^{-3}		37 / 36(2)		dB
Selectivity, image frequency(1)	Wanted signal at –67 dBm, modulated interferer at image frequency, BER = 10^{-3}		4		dB
Selectivity, image frequency ±2 MHz(1)	Note that Image frequency + 2 MHz is the Co-channel. Wanted signal at –67 dBm, modulated interferer at ±2 MHz from image frequency, BER = 10^{-3}		–7 / 26(2)		dB
Out-of-band blocking(3)	30 MHz to 2000 MHz		–33		dBm
Out-of-band blocking	2003 MHz to 2399 MHz		–15		dBm
Out-of-band blocking	2484 MHz to 2997 MHz		–12		dBm
Out-of-band blocking	3000 MHz to 12.75 GHz		–10		dBm
Intermodulation	Wanted signal at 2402 MHz, –64 dBm. Two interferers at 2408 and 2414 MHz respectively, at the given power level		–45		dBm

(1) Numbers given as I/C dB.
(2) X / Y, where X is +N MHz and Y is –N MHz.

Copyright © 2020 Texas Instruments Incorporated

(3) Excluding one exception at F_{wanted} / 2, per Bluetooth Specification.

8.13 2-Mbps GFSK (Bluetooth 5) – TX

Measured on the TI CC2650EM-5XD reference design with T_c = 25°C, V_{DDS} = 3.0 V, f_{RF} = 2440 MHz, unless otherwise noted.

PARAMETER	TEST CONDITIONS	MIN	TYP	MAX	UNIT
Output power, highest setting	Differential mode, delivered to a single-ended 50-Ω load through a balun		5		dBm
Output power, highest setting	Measured on CC2650EM-4XS, delivered to a single-ended 50-Ω load		2		dBm
Output power, lowest setting	Delivered to a single-ended 50-Ω load through a balun		–21		dBm
Spurious emission conducted measurement(1)	f < 1 GHz, outside restricted bands		–43		dBm
	f < 1 GHz, restricted bands ETSI		–65		dBm
	f < 1 GHz, restricted bands FCC		–71		dBm
	f > 1 GHz, including harmonics		–46		dBm

(1) Suitable for systems targeting compliance with worldwide radio-frequency regulations ETSI EN 300 328 and EN 300 440 Class 2 (Europe), FCC CFR47 Part 15 (US), and ARIB STD-T66 (Japan).

8.14 24-MHz Crystal Oscillator (XOSC_HF)

T_c = 25°C, V_{DDS} = 3.0 V, unless otherwise noted.(1)

PARAMETER	TEST CONDITIONS	MIN	TYP	MAX	UNIT
ESR Equivalent series resistance(2)	6 pF < C_L ≤ 9 pF		20	60	Ω
ESR Equivalent series resistance(2)	5 pF < C_L ≤ 6 pF			80	Ω
L_M Motional inductance(2)	Relates to load capacitance (C_L in Farads)		< 1.6 × 10^{-24} / $C_L{}^2$		H
C_L Crystal load capacitance(2) (3)		5		9	pF
Crystal frequency(2) (4)			24		MHz
Crystal frequency tolerance(2) (5)		–40		40	ppm
Start-up time(4) (6)			150		µs

(1) Probing or otherwise stopping the crystal while the DC/DC converter is enabled may cause permanent damage to the device.
(2) The crystal manufacturer's specification must satisfy this requirement
(3) Adjustable load capacitance is integrated into the device. External load capacitors are not required
(4) Measured on the TI CC2650EM-5XD reference design with T_c = 25°C, V_{DDS} = 3.0 V
(5) Includes initial tolerance of the crystal, drift over temperature, ageing and frequency pulling due to incorrect load capacitance. As per specification.
(6) Kick-started based on a temperature and aging compensated RCOSC_HF using precharge injection.

8.15 32.768-kHz Crystal Oscillator (XOSC_LF)

T_c = 25°C, V_{DDS} = 3.0 V, unless otherwise noted.

PARAMETER	TEST CONDITIONS	MIN	TYP	MAX	UNIT
Crystal frequency(1)			32.768		kHz
Crystal frequency tolerance, Bluetooth low-energy applications(1) (2)		–500		500	ppm
ESR Equivalent series resistance(1)			30	100	kΩ
C_L Crystal load capacitance(1)		6		12	pF

(1) The crystal manufacturer's specification must satisfy this requirement
(2) Includes initial tolerance of the crystal, drift over temperature, ageing and frequency pulling due to incorrect load capacitance. As per Bluetooth specification.

Copyright © 2020 Texas Instruments Incorporated

8.16 48-MHz RC Oscillator (RCOSC_HF)

Measured on the TI CC2650EM-5XD reference design with T_c = 25°C, V_{DDS} = 3.0 V, unless otherwise noted.

PARAMETER	TEST CONDITIONS	MIN	TYP	MAX	UNIT
Frequency			48		MHz
Uncalibrated frequency accuracy			±1%		
Calibrated frequency accuracy[1]			±0.25%		
Start-up time			5		µs

(1) Accuracy relative to the calibration source (XOSC_HF).

8.17 32-kHz RC Oscillator (RCOSC_LF)

Measured on the TI CC2650EM-5XD reference design with T_c = 25°C, V_{DDS} = 3.0 V, unless otherwise noted.

PARAMETER	TEST CONDITIONS	MIN	TYP	MAX	UNIT
Calibrated frequency[1]			32.8		kHz
Temperature coefficient			80		ppm/°C

(1) The frequency accuracy of the Real Time Clock (RTC) is not directly dependent on the frequency accuracy of the 32-kHz RC Oscillator. The RTC can be calibrated to an accuracy within ±500 ppm of 32.768 kHz by measuring the frequency error of RCOSC_LF relative to XOSC_HF and compensating the RTC tick speed. The procedure is explained in *Running Bluetooth® Low Energy on CC2640 Without 32 kHz Crystal*.

8.18 ADC Characteristics

T_c = 25°C, V_{DDS} = 3.0 V and voltage scaling enabled, unless otherwise noted.[1]

PARAMETER		TEST CONDITIONS	MIN	TYP	MAX	UNIT
	Input voltage range		0		VDDS	V
	Resolution			12		Bits
	Sample rate				200	ksps
	Offset	Internal 4.3-V equivalent reference[2]		2		LSB
	Gain error	Internal 4.3-V equivalent reference[2]		2.4		LSB
DNL[3]	Differential nonlinearity			>–1		LSB
INL[4]	Integral nonlinearity			±3		LSB
ENOB	Effective number of bits	Internal 4.3-V equivalent reference[2], 200 ksps, 9.6-kHz input tone		9.8		Bits
		VDDS as reference, 200 ksps, 9.6-kHz input tone		10		
		Internal 1.44-V reference, voltage scaling disabled, 32 samples average, 200 ksps, 300-Hz input tone		11.1		
THD	Total harmonic distortion	Internal 4.3-V equivalent reference[2], 200 ksps, 9.6-kHz input tone		–65		dB
		VDDS as reference, 200 ksps, 9.6-kHz input tone		–69		
		Internal 1.44-V reference, voltage scaling disabled, 32 samples average, 200 ksps, 300-Hz input tone		–71		
SINAD, SNDR	Signal-to-noise and Distortion ratio	Internal 4.3-V equivalent reference[2], 200 ksps, 9.6-kHz input tone		60		dB
		VDDS as reference, 200 ksps, 9.6-kHz input tone		63		
		Internal 1.44-V reference, voltage scaling disabled, 32 samples average, 200 ksps, 300-Hz input tone		69		
SFDR	Spurious-free dynamic range	Internal 4.3-V equivalent reference[2], 200 ksps, 9.6-kHz input tone		67		dB
		VDDS as reference, 200 ksps, 9.6-kHz input tone		68		
		Internal 1.44-V reference, voltage scaling disabled, 32 samples average, 200 ksps, 300-Hz input tone		73		

T_c = 25°C, V_{DDS} = 3.0 V and voltage scaling enabled, unless otherwise noted.[1]

PARAMETER	TEST CONDITIONS	MIN	TYP	MAX	UNIT
Conversion time	Serial conversion, time-to-output, 24-MHz clock		50		clock-cycles
Current consumption	Internal 4.3-V equivalent reference[2]		0.66		mA
Current consumption	VDDS as reference		0.75		mA
Reference voltage	Equivalent fixed internal reference (input voltage scaling enabled). For best accuracy, the ADC conversion should be initiated through the TIRTOS API in order to include the gain/offset compensation factors stored in FCFG1.		4.3[2] [5]		V
Reference voltage	Fixed internal reference (input voltage scaling disabled). For best accuracy, the ADC conversion should be initiated through the TIRTOS API in order to include the gain/offset compensation factors stored in FCFG1. This value is derived from the scaled value (4.3 V) as follows: Vref = 4.3 V × 1408 / 4095		1.48		V
Reference voltage	VDDS as reference (Also known as *RELATIVE*) (input voltage scaling enabled)		VDDS		V
Reference voltage	VDDS as reference (Also known as *RELATIVE*) (input voltage scaling disabled)		VDDS / 2.82[5]		V
Input impedance	200 ksps, voltage scaling enabled. Capacitive input, Input impedance depends on sampling frequency and sampling time		>1		MΩ

(1) Using IEEE Std 1241™-2010 for terminology and test methods.
(2) Input signal scaled down internally before conversion, as if voltage range was 0 to 4.3 V.
(3) No missing codes. Positive DNL typically varies from +0.3 to +3.5, depending on device (see Figure 8-21).
(4) For a typical example, see Figure 8-22.
(5) Applied voltage must be within absolute maximum ratings (Section 8.1) at all times.

8.19 Temperature Sensor

Measured on the TI CC2650EM-5XD reference design with T_c = 25°C, V_{DDS} = 3.0 V, unless otherwise noted.

PARAMETER	TEST CONDITIONS	MIN	TYP	MAX	UNIT
Resolution			4		°C
Range		–40		85	°C
Accuracy			±5		°C
Supply voltage coefficient[1]			3.2		°C/V

(1) Automatically compensated when using supplied driver libraries.

8.20 Battery Monitor

Measured on the TI CC2650EM-5XD reference design with T_c = 25°C, V_{DDS} = 3.0 V, unless otherwise noted.

PARAMETER	TEST CONDITIONS	MIN	TYP	MAX	UNIT
Resolution			50		mV
Range		1.8		3.8	V
Accuracy			13		mV

Copyright © 2020 Texas Instruments Incorporated

8.21 Continuous Time Comparator

T_c = 25°C, V_{DDS} = 3.0 V, unless otherwise noted.

PARAMETER	TEST CONDITIONS	MIN	TYP	MAX	UNIT
Input voltage range		0		VDDS	V
External reference voltage		0		VDDS	V
Internal reference voltage	DCOUPL as reference		1.27		V
Offset			3		mV
Hysteresis			<2		mV
Decision time	Step from –10 mV to 10 mV		0.72		µs
Current consumption when enabled(1)			8.6		µA

(1) Additionally, the bias module must be enabled when running in standby mode.

8.22 Low-Power Clocked Comparator

T_c = 25°C, V_{DDS} = 3.0 V, unless otherwise noted.

PARAMETER	TEST CONDITIONS	MIN	TYP	MAX	UNIT
Input voltage range		0		VDDS	V
Clock frequency			32		kHz
Internal reference voltage, VDDS / 2			1.49–1.51		V
Internal reference voltage, VDDS / 3			1.01–1.03		V
Internal reference voltage, VDDS / 4			0.78–0.79		V
Internal reference voltage, DCOUPL / 1			1.25–1.28		V
Internal reference voltage, DCOUPL / 2			0.63–0.65		V
Internal reference voltage, DCOUPL / 3			0.42–0.44		V
Internal reference voltage, DCOUPL / 4			0.33–0.34		V
Offset			<5		mV
Hysteresis			<5		mV
Decision time	Step from –50 mV to 50 mV		<1		clock-cycle
Current consumption when enabled			362		nA

8.23 Programmable Current Source

T_c = 25°C, V_{DDS} = 3.0 V, unless otherwise noted.

PARAMETER	TEST CONDITIONS	MIN	TYP	MAX	UNIT
Current source programmable output range			0.25–20		µA
Resolution			0.25		µA
Current consumption(1)	Including current source at maximum programmable output		23		µA

(1) Additionally, the bias module must be enabled when running in standby mode.

Copyright © 2020 Texas Instruments Incorporated

8.24 Synchronous Serial Interface (SSI)

T_c = 25°C, V_{DDS} = 3.0 V, unless otherwise noted.

PARAMETER	TEST CONDITIONS	MIN	TYP	MAX	UNIT
S1[(1)] t_{clk_per} (SSIClk period)	Device operating as SLAVE	12		65024	system clocks
S2[(1)] t_{clk_high} (SSIClk high time)	Device operating as SLAVE		0.5		t_{clk_per}
S3[(1)] t_{clk_low} (SSIClk low time)	Device operating as SLAVE		0.5		t_{clk_per}
S1 (TX only)[(1)] t_{clk_per} (SSIClk period)	One-way communication to SLAVE - Device operating as MASTER	4		65024	system clocks
S1 (TX and RX)[(1)] t_{clk_per} (SSIClk period)	Normal duplex operation - Device operating as MASTER	8		65024	system clocks
S2[(1)] t_{clk_high} (SSIClk high time)	Device operating as MASTER		0.5		t_{clk_per}
S3[(1)] t_{clk_low} (SSIClk low time)	Device operating as MASTER		0.5		t_{clk_per}

(1) Refer to SSI timing diagrams Figure 8-1, Figure 8-2, and Figure 8-3.

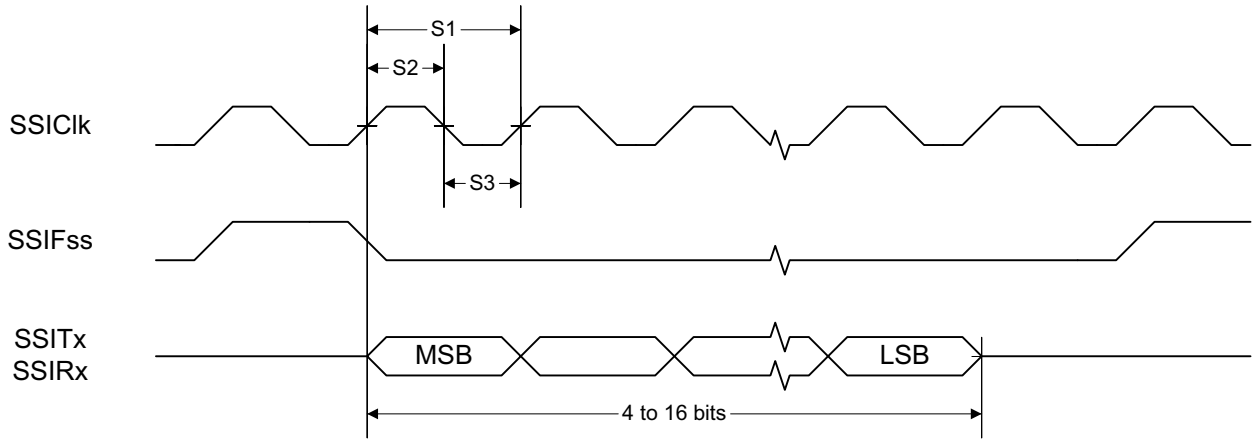

Figure 8-1. SSI Timing for TI Frame Format (FRF = 01), Single Transfer Timing Measurement

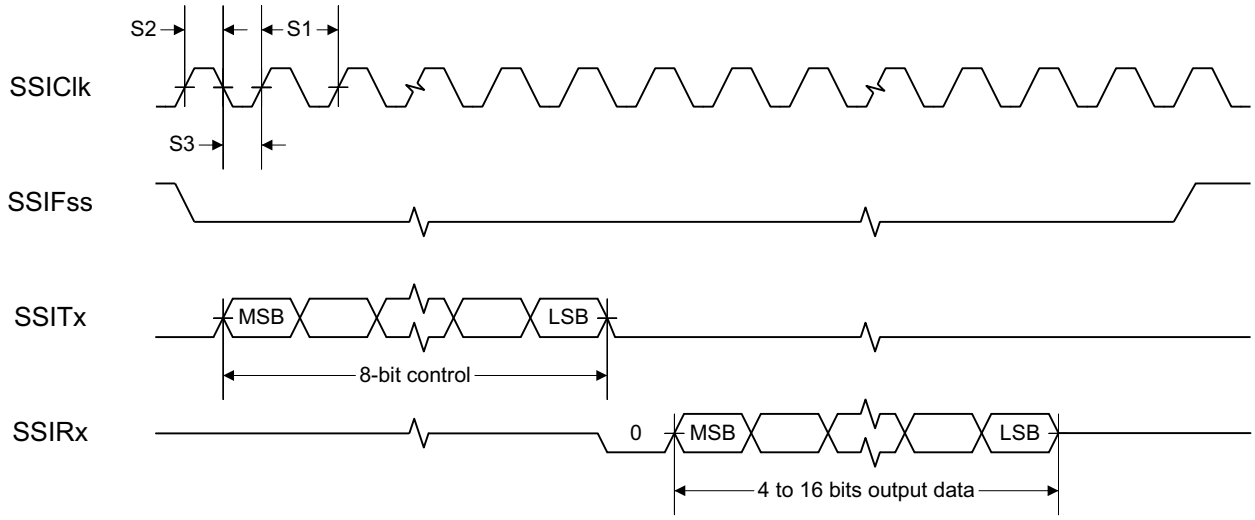

Figure 8-2. SSI Timing for MICROWIRE Frame Format (FRF = 10), Single Transfer

Copyright © 2020 Texas Instruments Incorporated

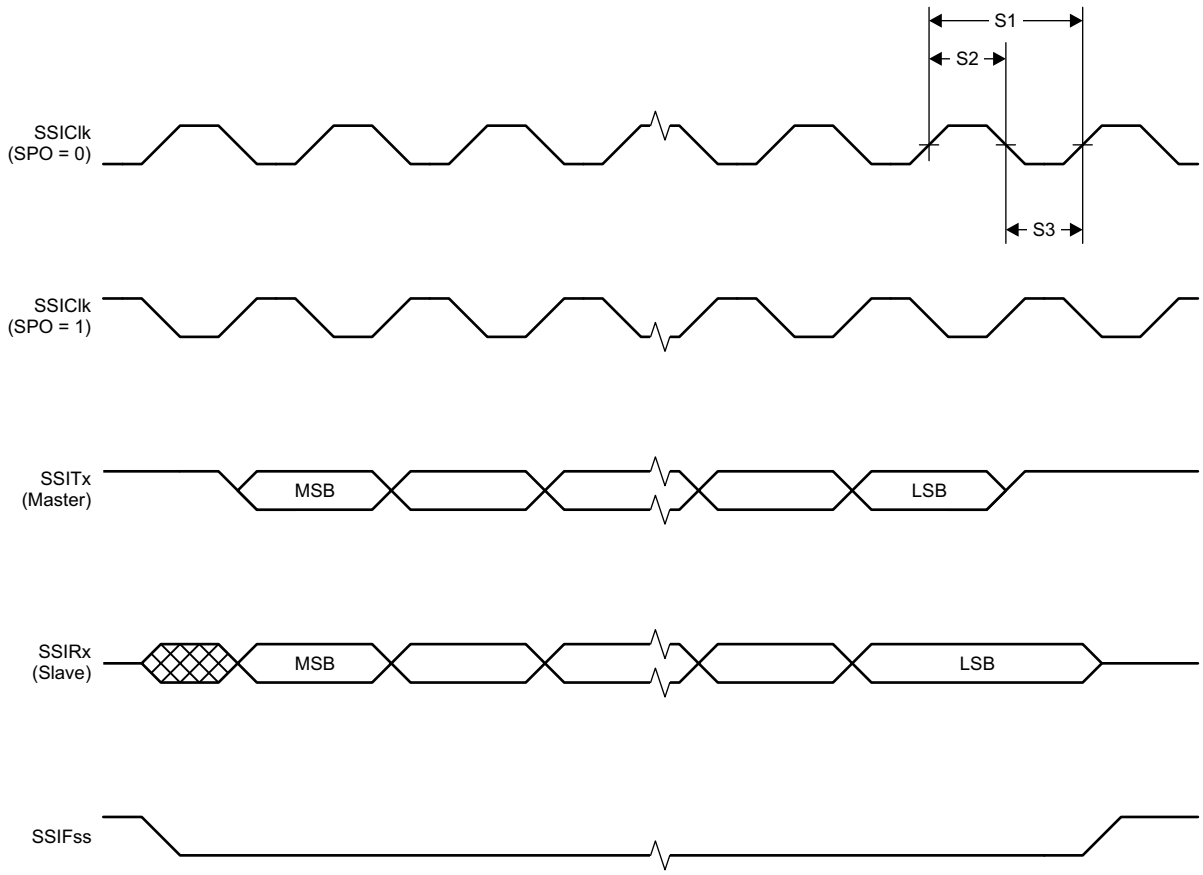

Figure 8-3. SSI Timing for SPI Frame Format (FRF = 00), With SPH = 1

8.25 DC Characteristics

PARAMETER	TEST CONDITIONS	MIN	TYP	MAX	UNIT
	T_A = 25°C, V_{DDS} = 1.8 V				
GPIO VOH at 8-mA load	IOCURR = 2, high-drive GPIOs only	1.32	1.54		V
GPIO VOL at 8-mA load	IOCURR = 2, high-drive GPIOs only		0.26	0.32	V
GPIO VOH at 4-mA load	IOCURR = 1	1.32	1.58		V
GPIO VOL at 4-mA load	IOCURR = 1		0.21	0.32	V
GPIO pullup current	Input mode, pullup enabled, Vpad = 0 V		71.7		µA
GPIO pulldown current	Input mode, pulldown enabled, Vpad = VDDS		21.1		µA
GPIO high/low input transition, no hysteresis	IH = 0, transition between reading 0 and reading 1		0.88		V
GPIO low-to-high input transition, with hysteresis	IH = 1, transition voltage for input read as 0 → 1		1.07		V
GPIO high-to-low input transition, with hysteresis	IH = 1, transition voltage for input read as 1 → 0		0.74		V
GPIO input hysteresis	IH = 1, difference between 0 → 1 and 1 → 0 points		0.33		V
	T_A = 25°C, V_{DDS} = 3.0 V				
GPIO VOH at 8-mA load	IOCURR = 2, high-drive GPIOs only		2.68		V
GPIO VOL at 8-mA load	IOCURR = 2, high-drive GPIOs only		0.33		V
GPIO VOH at 4-mA load	IOCURR = 1		2.72		V
GPIO VOL at 4-mA load	IOCURR = 1		0.28		V

Copyright © 2020 Texas Instruments Incorporated

PARAMETER	TEST CONDITIONS	MIN	TYP	MAX	UNIT
T_A = 25°C, V_{DDS} = 3.8 V					
GPIO pullup current	Input mode, pullup enabled, Vpad = 0 V		277		µA
GPIO pulldown current	Input mode, pulldown enabled, Vpad = VDDS		113		µA
GPIO high/low input transition, no hysteresis	IH = 0, transition between reading 0 and reading 1		1.67		V
GPIO low-to-high input transition, with hysteresis	IH = 1, transition voltage for input read as 0 → 1		1.94		V
GPIO high-to-low input transition, with hysteresis	IH = 1, transition voltage for input read as 1 → 0		1.54		V
GPIO input hysteresis	IH = 1, difference between 0 → 1 and 1 → 0 points		0.4		V
T_A = 25°C					
VIH	Lowest GPIO input voltage reliably interpreted as a «High»			0.8	VDDS(1)
VIL	Highest GPIO input voltage reliably interpreted as a «Low»	0.2			VDDS(1)

(1) Each GPIO is referenced to a specific VDDS pin. See the technical reference manual listed in Section 11.3 for more details.

8.26 Thermal Resistance Characteristics

NAME	DESCRIPTION	RSM (°C/W)(1) (2)	RHB (°C/W)(1) (2)	RGZ (°C/W)(1) (2)	YFV (°C/W)(1) (2)
$R\theta_{JA}$	Junction-to-ambient thermal resistance	36.9	32.8	29.6	76.2
$R\theta_{JC(top)}$	Junction-to-case (top) thermal resistance	30.3	24.0	15.7	0.3
$R\theta_{JB}$	Junction-to-board thermal resistance	7.6	6.8	6.2	16.3
Psi_{JT}	Junction-to-top characterization parameter	0.4	0.3	0.3	1.8
Psi_{JB}	Junction-to-board characterization parameter	7.4	6.8	6.2	16.3
$R\theta_{JC(bot)}$	Junction-to-case (bottom) thermal resistance	2.1	1.9	1.9	N/A

(1) °C/W = degrees Celsius per watt.
(2) These values are based on a JEDEC-defined 2S2P system (with the exception of the Theta JC [$R\theta_{JC}$] value, which is based on a JEDEC-defined 1S0P system) and will change based on environment as well as application. For more information, see these EIA/JEDEC standards:
- JESD51-2, *Integrated Circuits Thermal Test Method Environmental Conditions - Natural Convection (Still Air)*.
- JESD51-3, *Low Effective Thermal Conductivity Test Board for Leaded Surface Mount Packages*.
- JESD51-7, *High Effective Thermal Conductivity Test Board for Leaded Surface Mount Packages*.
- JESD51-9, *Test Boards for Area Array Surface Mount Package Thermal Measurements*.

For RSM, RHB, and RGZ, power dissipation of 2 W and an ambient temperature of 70°C is assumed. For YFV, power dissipation of 1.3 W and ambient temperature of 25°C is assumed.

8.27 Timing Requirements

		MIN	NOM	MAX	UNIT
Rising supply-voltage slew rate		0		100	mV/µs
Falling supply-voltage slew rate		0		20	mV/µs
Falling supply-voltage slew rate, with low-power flash settings(1)				3	mV/µs
Positive temperature gradient in standby(2)	No limitation for negative temperature gradient, or outside standby mode			5	°C/s
CONTROL INPUT AC CHARACTERISTICS(3)					
RESET_N low duration		1			µs

(1) For smaller coin cell batteries, with high worst-case end-of-life equivalent source resistance, a 22-µF VDDS input capacitor (see Figure 10-1) must be used to ensure compliance with this slew rate.
(2) Applications using RCOSC_LF as sleep timer must also consider the drift in frequency caused by a change in temperature (see Section 8.17).
(3) T_A = –40°C to +85°C, V_{DDS} = 1.7 V to 3.8 V, unless otherwise noted.

Copyright © 2020 Texas Instruments Incorporated

8.28 Switching Characteristics

Measured on the TI CC2650EM-5XD reference design with T_c = 25°C, V_{DDS} = 3.0 V, unless otherwise noted.

PARAMETER	TEST CONDITIONS	MIN	TYP	MAX	UNIT
WAKEUP AND TIMING					
Idle → Active			14		µs
Standby → Active			151		µs
Shutdown → Active			1015		µs

8.29 Typical Characteristics

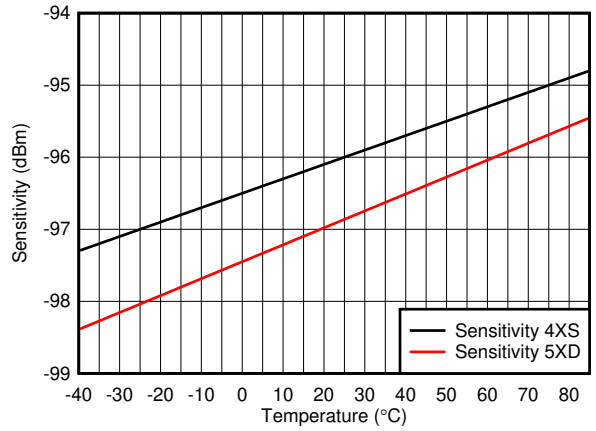

Figure 8-4. BLE Sensitivity vs Temperature

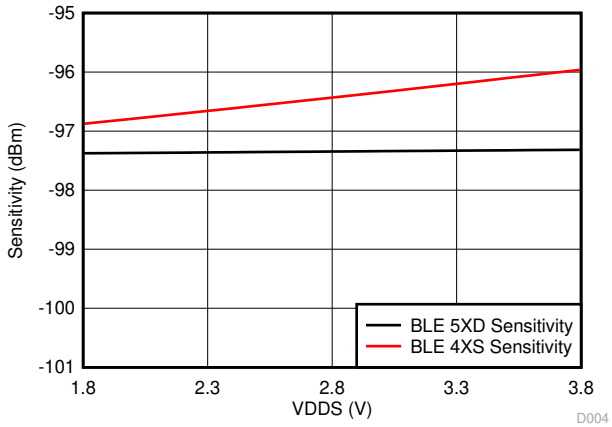

Figure 8-5. BLE Sensitivity vs Supply Voltage (VDDS)

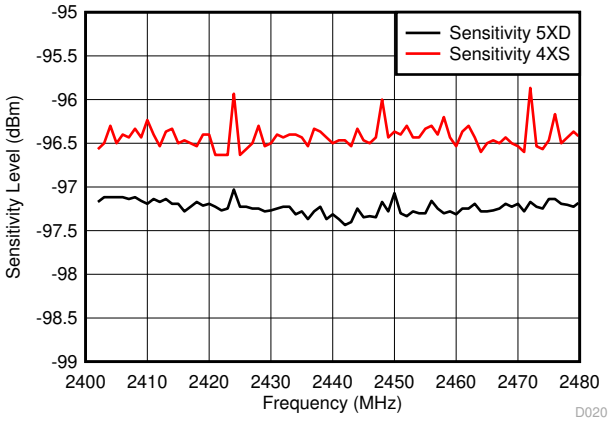

Figure 8-6. BLE Sensitivity vs Channel Frequency

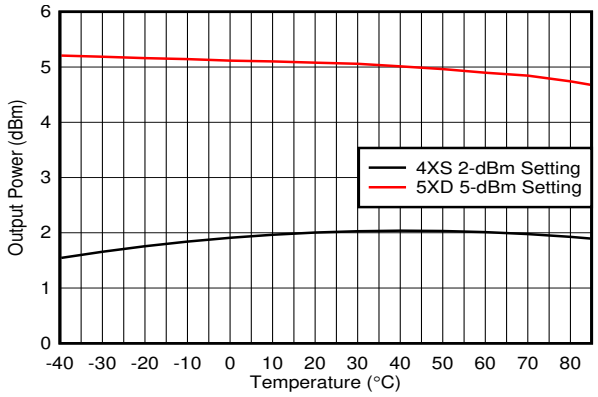

Figure 8-7. TX Output Power vs Temperature

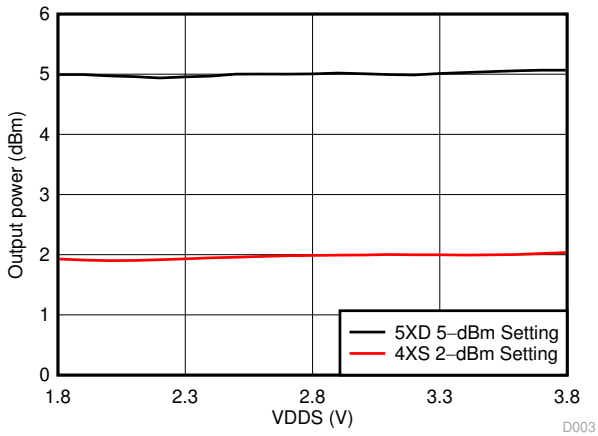

Figure 8-8. TX Output Power vs Supply Voltage (VDDS)

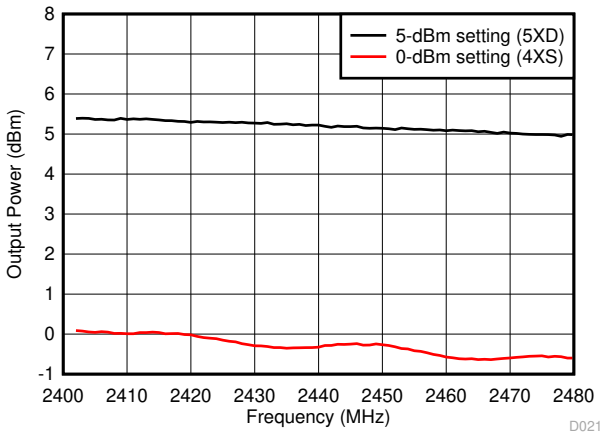

Figure 8-9. TX Output Power vs Channel Frequency

Copyright © 2020 Texas Instruments Incorporated

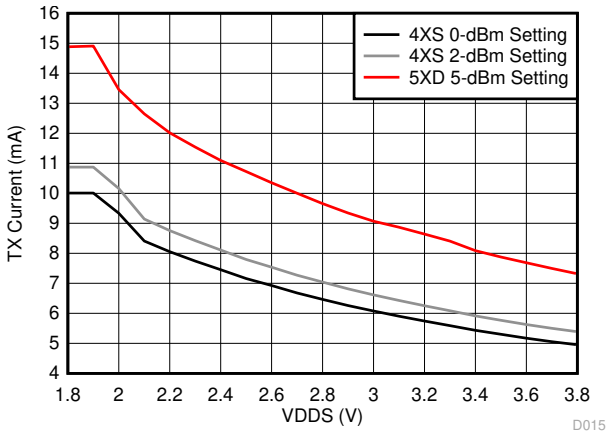

Figure 8-10. TX Current Consumption vs Supply Voltage (VDDS)

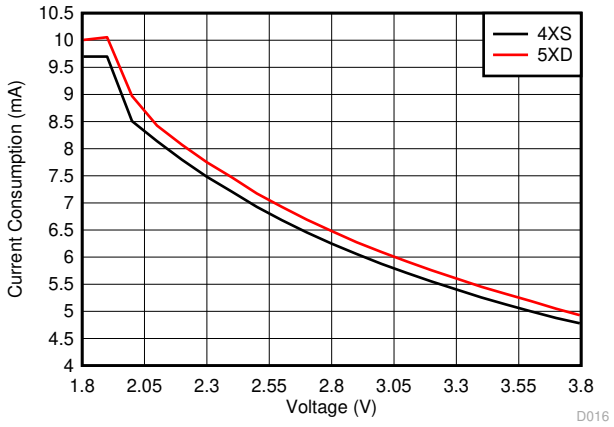

Figure 8-11. RX Mode Current vs Supply Voltage (VDDS)

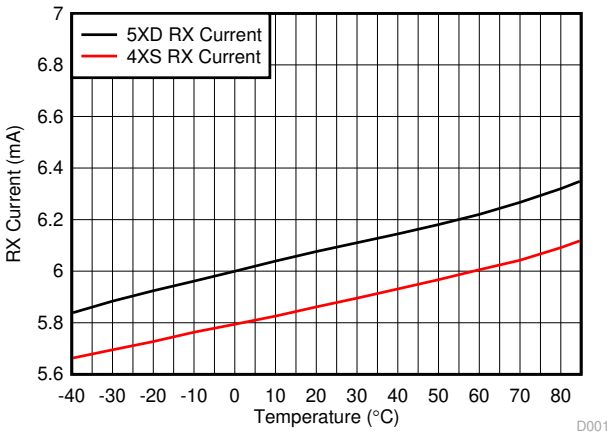

Figure 8-12. RX Mode Current Consumption vs Temperature

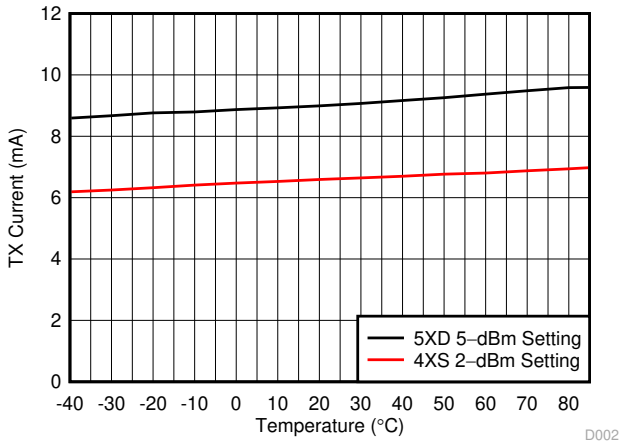

Figure 8-13. TX Mode Current Consumption vs Temperature

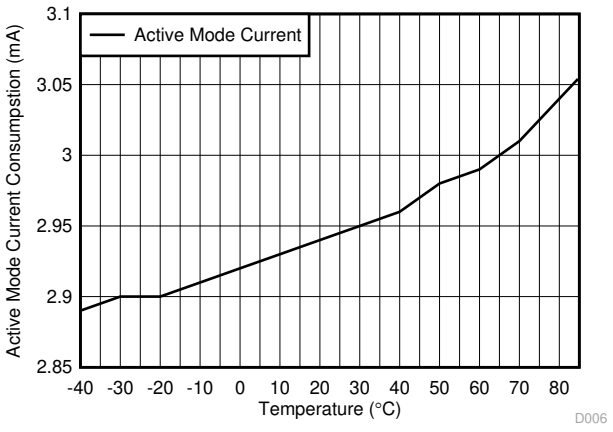

Figure 8-14. Active Mode (MCU Running, No Peripherals) Current Consumption vs Temperature

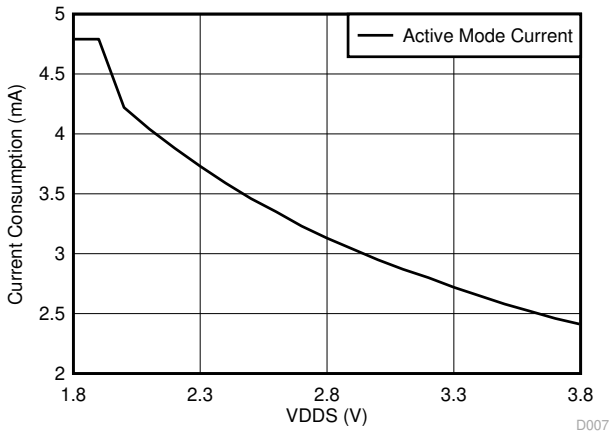

Figure 8-15. Active Mode (MCU Running, No Peripherals) Current Consumption vs Supply Voltage (VDDS)

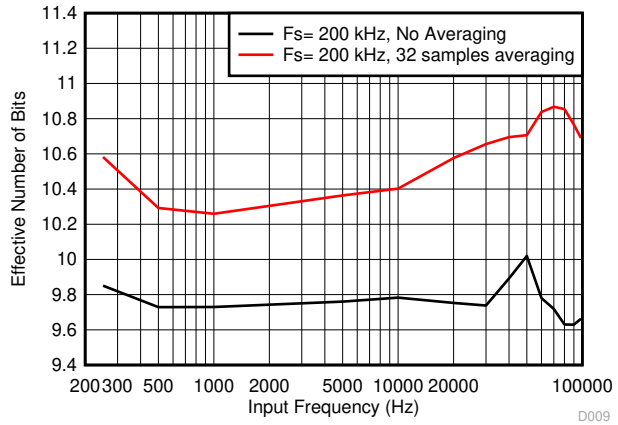

Figure 8-16. SoC ADC Effective Number of Bits vs Input Frequency (Internal Reference, Scaling enabled)

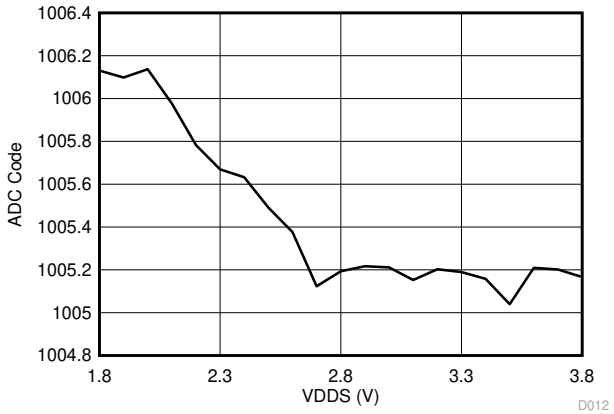

Figure 8-17. SoC ADC Output vs Supply Voltage (Fixed Input, Internal Reference)

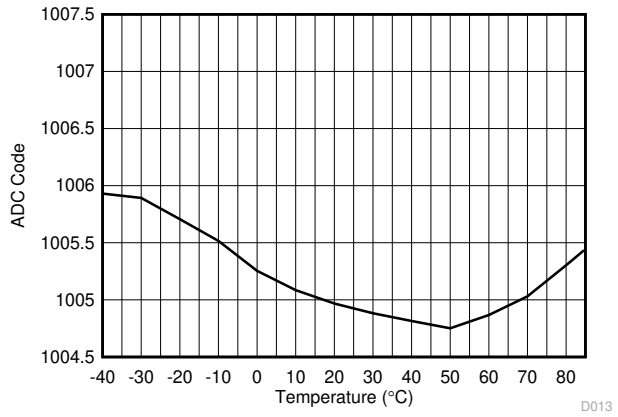

Figure 8-18. SoC ADC Output vs Temperature (Fixed Input, Internal Reference)

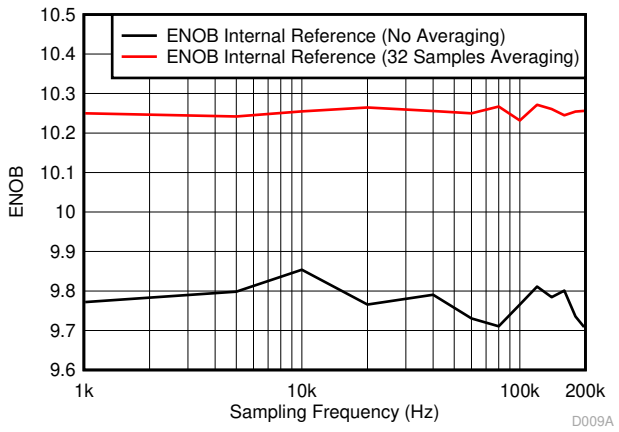

Figure 8-19. SoC ADC ENOB vs Sampling Frequency (Scaling enabled, input frequency = FS / 10)

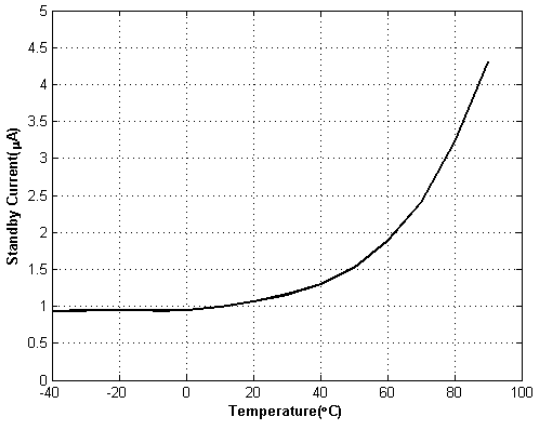

Figure 8-20. Standby Mode Supply Current vs Temperature

Copyright © 2020 Texas Instruments Incorporated

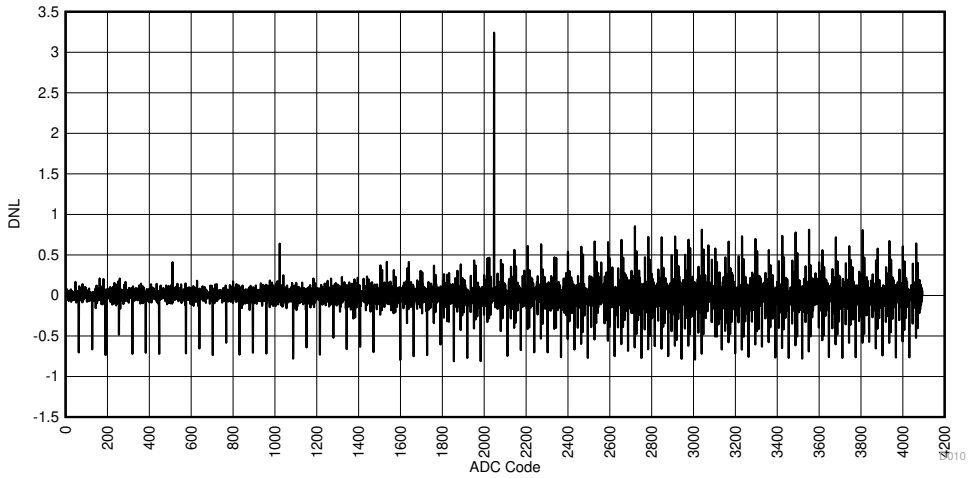

Figure 8-21. SoC ADC DNL vs ADC Code (Internal Reference)

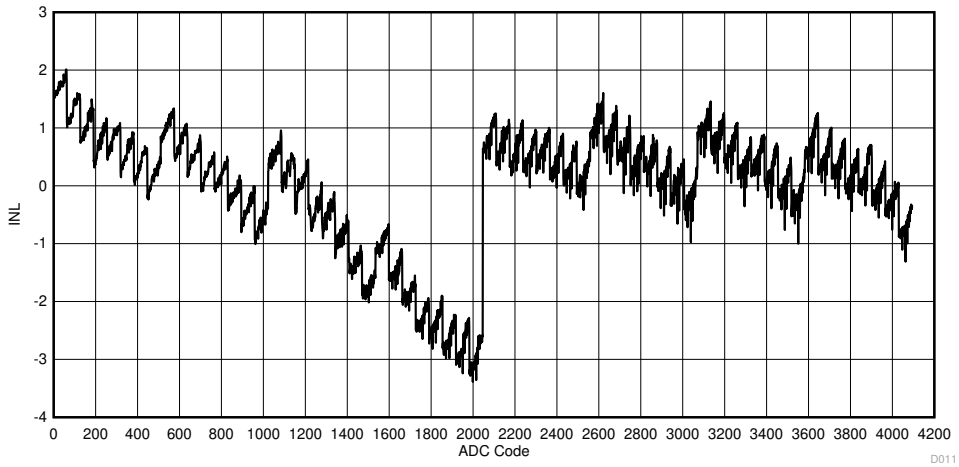

Figure 8-22. SoC ADC INL vs ADC Code (Internal Reference)

9 Detailed Description

9.1 Overview

The core modules of the CC26xx product family are shown in Section 9.2.

9.2 Functional Block Diagram

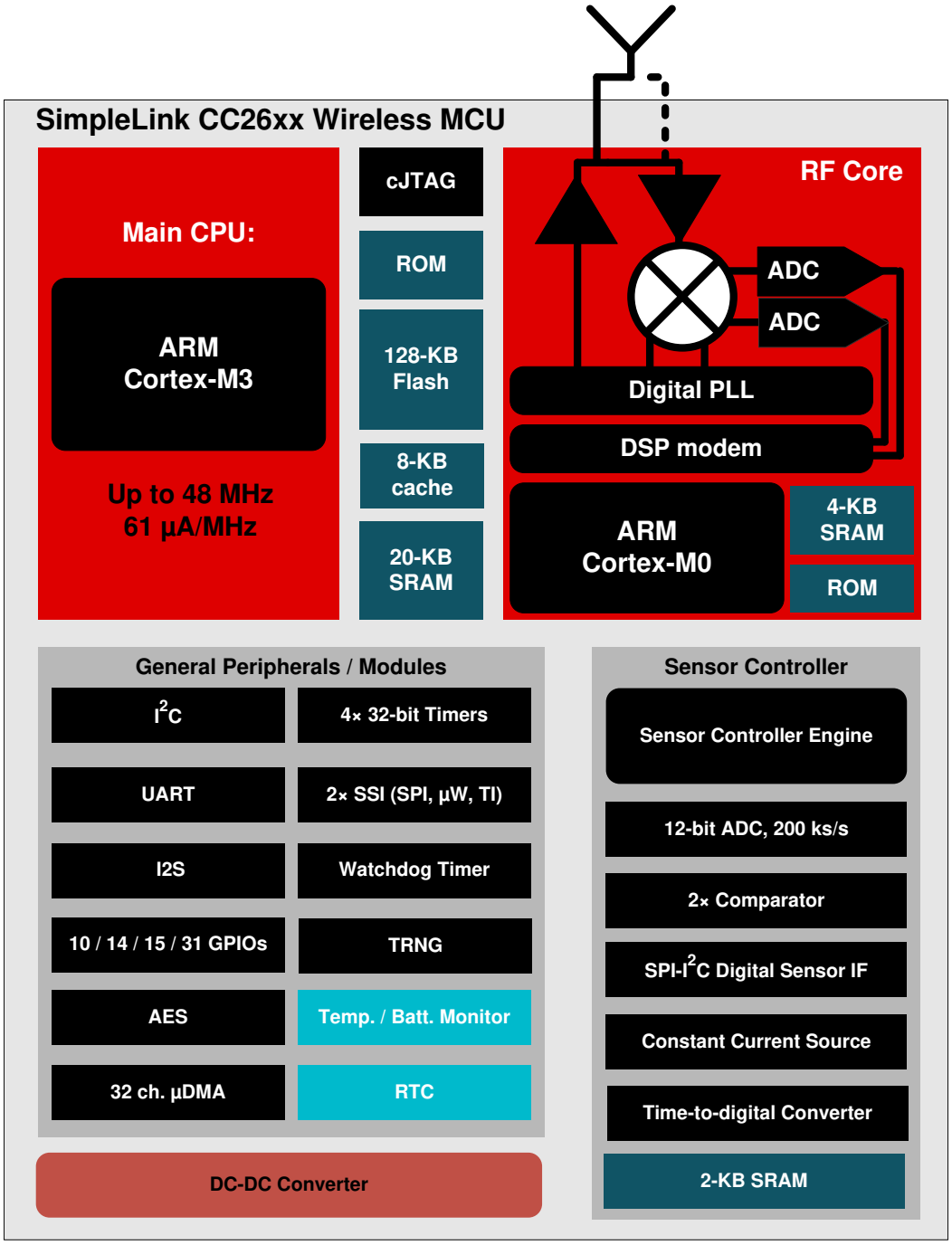

Copyright © 2016, Texas Instruments Incorporated

Copyright © 2020 Texas Instruments Incorporated

9.3 Main CPU

The SimpleLink™ CC2640R2F Wireless MCU contains an Arm® Cortex®-M3 (CM3) 32-bit CPU, which runs the application and the higher layers of the protocol stack.

The CM3 processor provides a high-performance, low-cost platform that meets the system requirements of minimal memory implementation, and low-power consumption, while delivering outstanding computational performance and exceptional system response to interrupts.

Arm® Cortex®-M3 features include:

- 32-bit Arm® Cortex®-M3 architecture optimized for small-footprint embedded applications
- Outstanding processing performance combined with fast interrupt handling
- Arm® Thumb®-2 mixed 16- and 32-bit instruction set delivers the high performance expected of a 32-bit Arm® core in a compact memory size usually associated with 8- and 16-bit devices, typically in the range of a few kilobytes of memory for microcontroller-class applications:
  - Single-cycle multiply instruction and hardware divide
  - Atomic bit manipulation (bit-banding), delivering maximum memory use and streamlined peripheral control
  - Unaligned data access, enabling data to be efficiently packed into memory
- Fast code execution permits slower processor clock or increases sleep mode time
- Harvard architecture characterized by separate buses for instruction and data
- Efficient processor core, system, and memories
- Hardware division and fast digital-signal-processing oriented multiply accumulate
- Saturating arithmetic for signal processing
- Deterministic, high-performance interrupt handling for time-critical applications
- Enhanced system debug with extensive breakpoint and trace capabilities
- Serial wire trace reduces the number of pins required for debugging and tracing
- Migration from the ARM7™ processor family for better performance and power efficiency
- Optimized for single-cycle flash memory use
- Ultra-low-power consumption with integrated sleep modes
- 1.25 DMIPS per MHz

9.4 RF Core

The RF Core contains an Arm® Cortex®-M0 processor that interfaces the analog RF and base-band circuits, handles data to and from the system side, and assembles the information bits in a given packet structure. The RF core offers a high level, command-based API to the main CPU.

The RF core is capable of autonomously handling the time-critical aspects of the radio protocols (Bluetooth® low energy) thus offloading the main CPU and leaving more resources for the user application.

The RF core has a dedicated 4-KB SRAM block and runs initially from separate ROM memory. The Arm® Cortex®-M0 processor is not programmable by customers.

Copyright © 2020 Texas Instruments Incorporated

9.5 Sensor Controller

The Sensor Controller contains circuitry that can be selectively enabled in standby mode. The peripherals in this domain may be controlled by the Sensor Controller Engine, which is a proprietary power-optimized CPU. This CPU can read and monitor sensors or perform other tasks autonomously, thereby significantly reducing power consumption and offloading the main CM3 CPU. The GPIOs that can be connected to the Sensor Controller are listed in Table 9-1.

The Sensor Controller is set up using a PC-based configuration tool, called Sensor Controller Studio, and potential use cases may be (but are not limited to):

- Analog sensors using integrated ADC
- Digital sensors using GPIOs, bit-banged I^2C, and SPI
- UART communication for sensor reading or debugging
- Capacitive sensing
- Waveform generation
- Pulse counting
- Keyboard scan
- Quadrature decoder for polling rotation sensors
- Oscillator calibration

Note

Texas Instruments provides application examples for some of these use cases, but not for all of them.

The peripherals in the Sensor Controller include the following:

- The low-power clocked comparator can be used to wake the device from any state in which the comparator is active. A configurable internal reference can be used in conjunction with the comparator. The output of the comparator can also be used to trigger an interrupt or the ADC.
- Capacitive sensing functionality is implemented through the use of a constant current source, a time-to-digital converter, and a comparator. The continuous time comparator in this block can also be used as a higher-accuracy alternative to the low-power clocked comparator. The Sensor Controller will take care of baseline tracking, hysteresis, filtering and other related functions.
- The ADC is a 12-bit, 200-ksamples/s ADC with eight inputs and a built-in voltage reference. The ADC can be triggered by many different sources, including timers, I/O pins, software, the analog comparator, and the RTC.
- The Sensor Controller also includes a SPI–I^2C digital interface.
- The analog modules can be connected to up to eight different GPIOs.

The peripherals in the Sensor Controller can also be controlled from the main application processor.

Table 9-1. GPIOs Connected to the Sensor Controller (1)

ANALOG CAPABLE	7 × 7 RGZ DIO NUMBER	5 × 5 RHB DIO NUMBER	2.7 × 2.7 YFV DIO NUMBER	4 × 4 RSM DIO NUMBER
Y	30	14		
Y	29	13	13	
Y	28	12	12	
Y	27	11	11	9
Y	26	9	9	8
Y	25	10	10	7
Y	24	8	8	6
Y	23	7	7	5
N	7	4	4	2
N	6	3	3	1
N	5	2	2	0

Copyright © 2020 Texas Instruments Incorporated

Table 9-1. GPIOs Connected to the Sensor Controller [(1)] (continued)

ANALOG CAPABLE	7 × 7 RGZ DIO NUMBER	5 × 5 RHB DIO NUMBER	2.7 × 2.7 YFV DIO NUMBER	4 × 4 RSM DIO NUMBER
N	4	1	1	
N	3	0	0	
N	2			
N	1			
N	0			

(1) Depending on the package size, up to 16 pins can be connected to the Sensor Controller. Up to 8 of these pins can be connected to analog modules.

9.6 Memory

The Flash memory provides nonvolatile storage for code and data. The Flash memory is in-system programmable.

The SRAM (static RAM) can be used for both storage of data and execution of code and is split into two 4-KB blocks and two 6-KB blocks. Retention of the RAM contents in standby mode can be enabled or disabled individually for each block to minimize power consumption. In addition, if flash cache is disabled, the 8-KB cache can be used as a general-purpose RAM.

The ROM provides preprogrammed embedded TI-RTOS kernel, Driverlib, and lower layer protocol stack software (Bluetooth low energy Controller). It also contains a bootloader that can be used to reprogram the device using SPI or UART. For CC2640R2Fxxx devices, the ROM contains Bluetooth 4.2 low energy host- and controller software libraries, leaving more of the flash memory available for the customer application.

9.7 Debug

The on-chip debug support is done through a dedicated cJTAG (IEEE 1149.7) or JTAG (IEEE 1149.1) interface.

9.8 Power Management

To minimize power consumption, the CC2640R2F device supports a number of power modes and power management features (see Table 9-2).

Table 9-2. Power Modes

MODE	SOFTWARE CONFIGURABLE POWER MODES				RESET PIN HELD
	ACTIVE	IDLE	STANDBY	SHUTDOWN	
CPU	Active	Off	Off	Off	Off
Flash	On	Available	Off	Off	Off
SRAM	On	On	On	Off	Off
Radio	Available	Available	Off	Off	Off
Supply System	On	On	Duty Cycled	Off	Off
Current	1.45 mA + 31 µA/MHz	650 µA	1 µA	0.15 µA	0.1 µA
Wake-up Time to CPU Active[(1)]	–	14 µs	151 µs	1015 µs	1015 µs
Register Retention	Full	Full	Partial	No	No
SRAM Retention	Full	Full	Full	No	No
High-Speed Clock	XOSC_HF or RCOSC_HF	XOSC_HF or RCOSC_HF	Off	Off	Off
Low-Speed Clock	XOSC_LF or RCOSC_LF	XOSC_LF or RCOSC_LF	XOSC_LF or RCOSC_LF	Off	Off
Peripherals	Available	Available	Off	Off	Off
Sensor Controller	Available	Available	Available	Off	Off
Wake up on RTC	Available	Available	Available	Off	Off
Wake up on Pin Edge	Available	Available	Available	Available	Off

Copyright © 2020 Texas Instruments Incorporated

Table 9-2. Power Modes (continued)

MODE	SOFTWARE CONFIGURABLE POWER MODES				RESET PIN HELD
	ACTIVE	IDLE	STANDBY	SHUTDOWN	
Wake up on Reset Pin	Available	Available	Available	Available	Available
Brown Out Detector (BOD)	Active	Active	Duty Cycled	Off	N/A
Power On Reset (POR)	Active	Active	Active	Active	N/A

(1) Not including RTOS overhead

In active mode, the application CM3 CPU is actively executing code. Active mode provides normal operation of the processor and all of the peripherals that are currently enabled. The system clock can be any available clock source (see Table 9-2).

In idle mode, all active peripherals can be clocked, but the Application CPU core and memory are not clocked and no code is executed. Any interrupt event will bring the processor back into active mode.

In standby mode, only the always-on domain (AON) is active. An external wake-up event, RTC event, or sensor-controller event is required to bring the device back to active mode. MCU peripherals with retention do not need to be reconfigured when waking up again, and the CPU continues execution from where it went into standby mode. All GPIOs are latched in standby mode.

In shutdown mode, the device is turned off entirely, including the AON domain and the Sensor Controller. The I/Os are latched with the value they had before entering shutdown mode. A change of state on any I/O pin defined as a *wake-up from Shutdown pin* wakes up the device and functions as a reset trigger. The CPU can differentiate between a reset in this way, a reset-by-reset pin, or a power-on-reset by reading the reset status register. The only state retained in this mode is the latched I/O state and the Flash memory contents.

The Sensor Controller is an autonomous processor that can control the peripherals in the Sensor Controller independently of the main CPU, which means that the main CPU does not have to wake up, for example, to execute an ADC sample or poll a digital sensor over SPI. The main CPU saves both current and wake-up time that would otherwise be wasted. The Sensor Controller Studio enables the user to configure the sensor controller and choose which peripherals are controlled and which conditions wake up the main CPU.

9.9 Clock Systems

The CC2640R2F supports two external and two internal clock sources.

A 24-MHz crystal is required as the frequency reference for the radio. This signal is doubled internally to create a 48-MHz clock.

The 32-kHz crystal is optional. *Bluetooth* low energy requires a slow-speed clock with better than ±500 ppm accuracy if the device is to enter any sleep mode while maintaining a connection. The internal 32-kHz RC oscillator can in some use cases be compensated to meet the requirements. The low-speed crystal oscillator is designed for use with a 32-kHz watch-type crystal.

The internal high-speed oscillator (48-MHz) can be used as a clock source for the CPU subsystem.

The internal low-speed oscillator (32.768-kHz) can be used as a reference if the low-power crystal oscillator is not used.

The 32-kHz clock source can be used as external clocking reference through GPIO.

9.10 General Peripherals and Modules

The I/O controller controls the digital I/O pins and contains multiplexer circuitry to allow a set of peripherals to be assigned to I/O pins in a flexible manner. All digital I/Os are interrupt and wake-up capable, have a programmable pullup and pulldown function and can generate an interrupt on a negative or positive edge (configurable). When configured as an output, pins can function as either push-pull or open-drain. Five GPIOs have high drive capabilities (marked in **bold** in Section 7).

The SSIs are synchronous serial interfaces that are compatible with SPI, MICROWIRE, and Texas Instruments synchronous serial interfaces. The SSIs support both SPI master and slave up to 4 MHz.

Copyright © 2020 Texas Instruments Incorporated

The UART implements a universal asynchronous receiver/transmitter function. It supports flexible baud-rate generation up to a maximum of 3 Mbps .

Timer 0 is a general-purpose timer module (GPTM), which provides two 16-bit timers. The GPTM can be configured to operate as a single 32-bit timer, dual 16-bit timers or as a PWM module.

Timer 1, Timer 2, and Timer 3 are also GPTMs. Each of these timers is functionally equivalent to Timer 0.

In addition to these four timers, the RF core has its own timer to handle timing for RF protocols; the RF timer can be synchronized to the RTC.

The I^2C interface is used to communicate with devices compatible with the I^2C standard. The I^2C interface is capable of 100-kHz and 400-kHz operation, and can serve as both I^2C master and I^2C slave.

The TRNG module provides a true, nondeterministic noise source for the purpose of generating keys, initialization vectors (IVs), and other random number requirements. The TRNG is built on 24 ring oscillators that create unpredictable output to feed a complex nonlinear combinatorial circuit.

The watchdog timer is used to regain control if the system fails due to a software error after an external device fails to respond as expected. The watchdog timer can generate an interrupt or a reset when a predefined time-out value is reached.

The device includes a direct memory access (µDMA) controller. The µDMA controller provides a way to offload data transfer tasks from the CM3 CPU, allowing for more efficient use of the processor and the available bus bandwidth. The µDMA controller can perform transfer between memory and peripherals. The µDMA controller has dedicated channels for each supported on-chip module and can be programmed to automatically perform transfers between peripherals and memory as the peripheral is ready to transfer more data. Some features of the µDMA controller include the following (this is not an exhaustive list):

- Highly flexible and configurable channel operation of up to 32 channels
- Transfer modes:
  - Memory-to-memory
  - Memory-to-peripheral
  - Peripheral-to-memory
  - Peripheral-to-peripheral
- Data sizes of 8, 16, and 32 bits

The AON domain contains circuitry that is always enabled, except for in Shutdown (where the digital supply is off). This circuitry includes the following:

- The RTC can be used to wake the device from any state where it is active. The RTC contains three compare and one capture registers. With software support, the RTC can be used for clock and calendar operation. The RTC is clocked from the 32-kHz RC oscillator or crystal. The RTC can also be compensated to tick at the correct frequency even when the internal 32-kHz RC oscillator is used instead of a crystal.
- The battery monitor and temperature sensor are accessible by software and give a battery status indication as well as a coarse temperature measure.

Copyright © 2020 Texas Instruments Incorporated

9.11 Voltage Supply Domains

The CC2640R2F device can interface to two or three different voltage domains depending on the package type. On-chip level converters ensure correct operation as long as the signal voltage on each input/output pin is set with respect to the corresponding supply pin (VDDS, VDDS2 or VDDS3). Table 9-3 lists the pin-to-VDDS mapping.

Table 9-3. Pin Function to VDDS Mapping Table

	Package			
	VQFN 7 × 7 (RGZ)	**VQFN 5 × 5 (RHB)**	**VQFN 4 × 4 (RSM)**	**DSBGA (YFV)**
VDDS[(1)]	DIO 23–30 Reset_N	DIO 7–14 Reset_N	DIO 5–9 Reset_N	DIO 7–13 Reset_N
VDDS2	DIO 0–11	DIO 0–6 JTAG	DIO 0–4 JTAG	DIO 0–6 JTAG
VDDS3	DIO 12–22 JTAG	N/A	N/A	N/A

(1) VDDS_DCDC must be connected to VDDS on the PCB.

9.12 System Architecture

Depending on the product configuration, CC26xx can function either as a Wireless Network Processor (WNP—an IC running the wireless protocol stack, with the application running on a separate MCU), or as a System-on-Chip (SoC), with the application and protocol stack running on the Arm® Cortex®-M3 core inside the device.

In the first case, the external host MCU communicates with the device using SPI or UART. In the second case, the application must be written according to the application framework supplied with the wireless protocol stack.

Copyright © 2020 Texas Instruments Incorporated

10 Application, Implementation, and Layout

Note

Information in the following applications sections is not part of the TI component specification, and TI does not warrant its accuracy or completeness. TI's customers are responsible for determining suitability of components for their purposes. Customers should validate and test their design implementation to confirm system functionality.

10.1 Application Information

Very few external components are required for the operation of the CC2640R2F device. This section provides some general information about the various configuration options when using the CC2640R2F in an application, and then shows two examples of application circuits with schematics and layout. This is only a small selection of the many application circuit examples available as complete reference designs from the product folder on www.ti.com.

Figure 10-1 shows the various RF front-end configuration options. The RF front end can be used in differential- or single-ended configurations with the options of having internal or external biasing. These options allow for various trade-offs between cost, board space, and RF performance. Differential operation with external bias gives the best performance while single-ended operation with internal bias gives the least amount of external components and the lowest power consumption. Reference designs exist for each of these options.

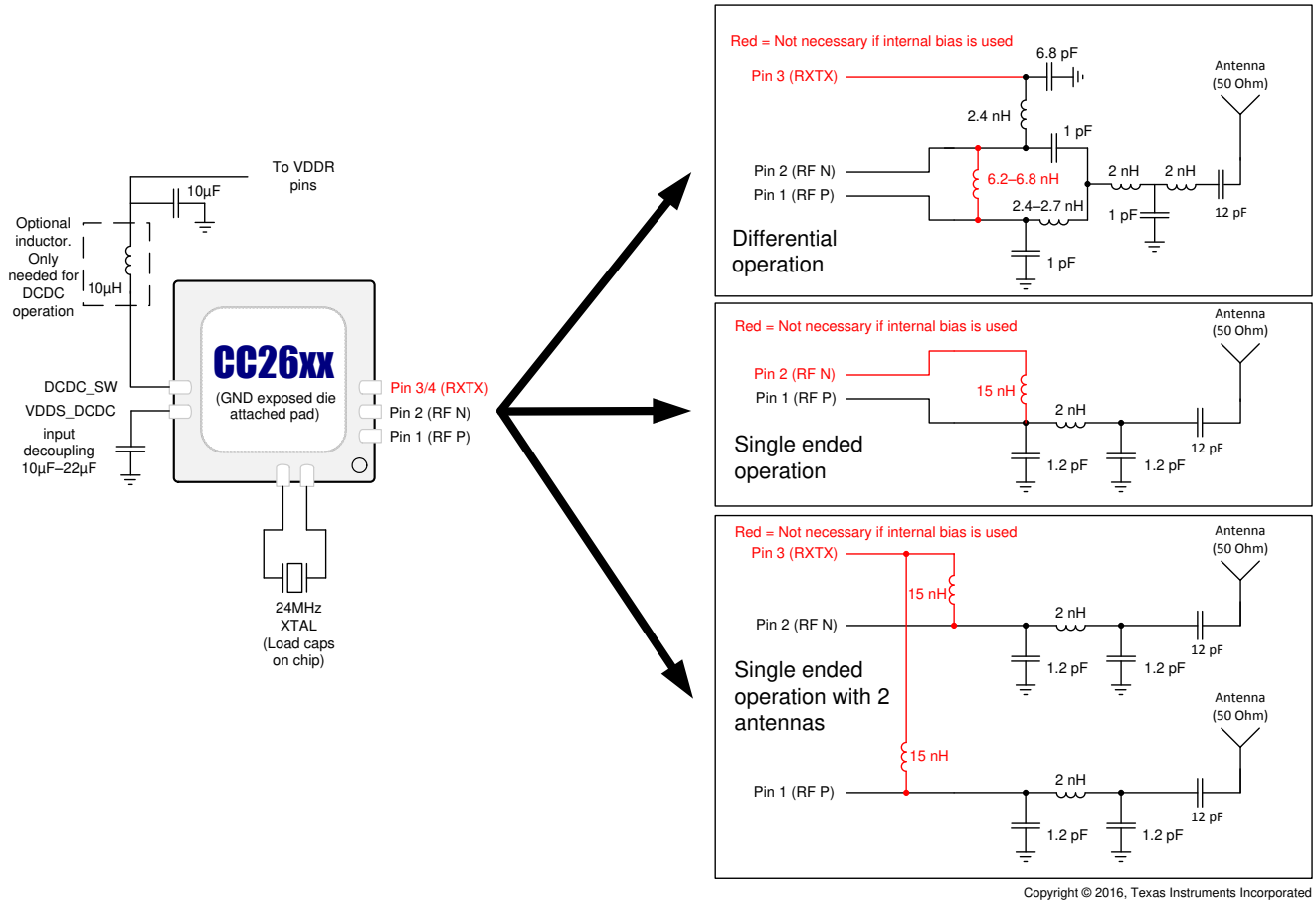

Copyright © 2016, Texas Instruments Incorporated

Figure 10-1. CC2640R2F Application Circuit

Figure 10-2 shows the various supply voltage configuration options. Not all power supply decoupling capacitors or digital I/Os are shown. Exact pin positions will vary between the different package options. For a detailed overview of power supply decoupling and wiring, see the TI reference designs and the CC26xx technical reference manual (Section 11.3).

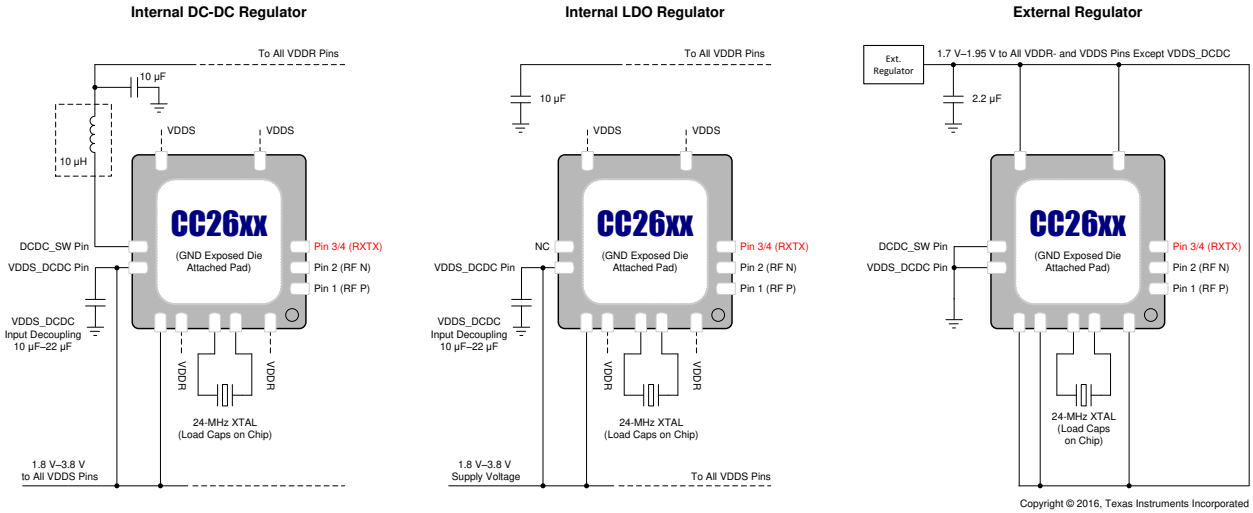

Figure 10-2. Supply Voltage Configurations

Copyright © 2020 Texas Instruments Incorporated

10.2 5 × 5 External Differential (5XD) Application Circuit

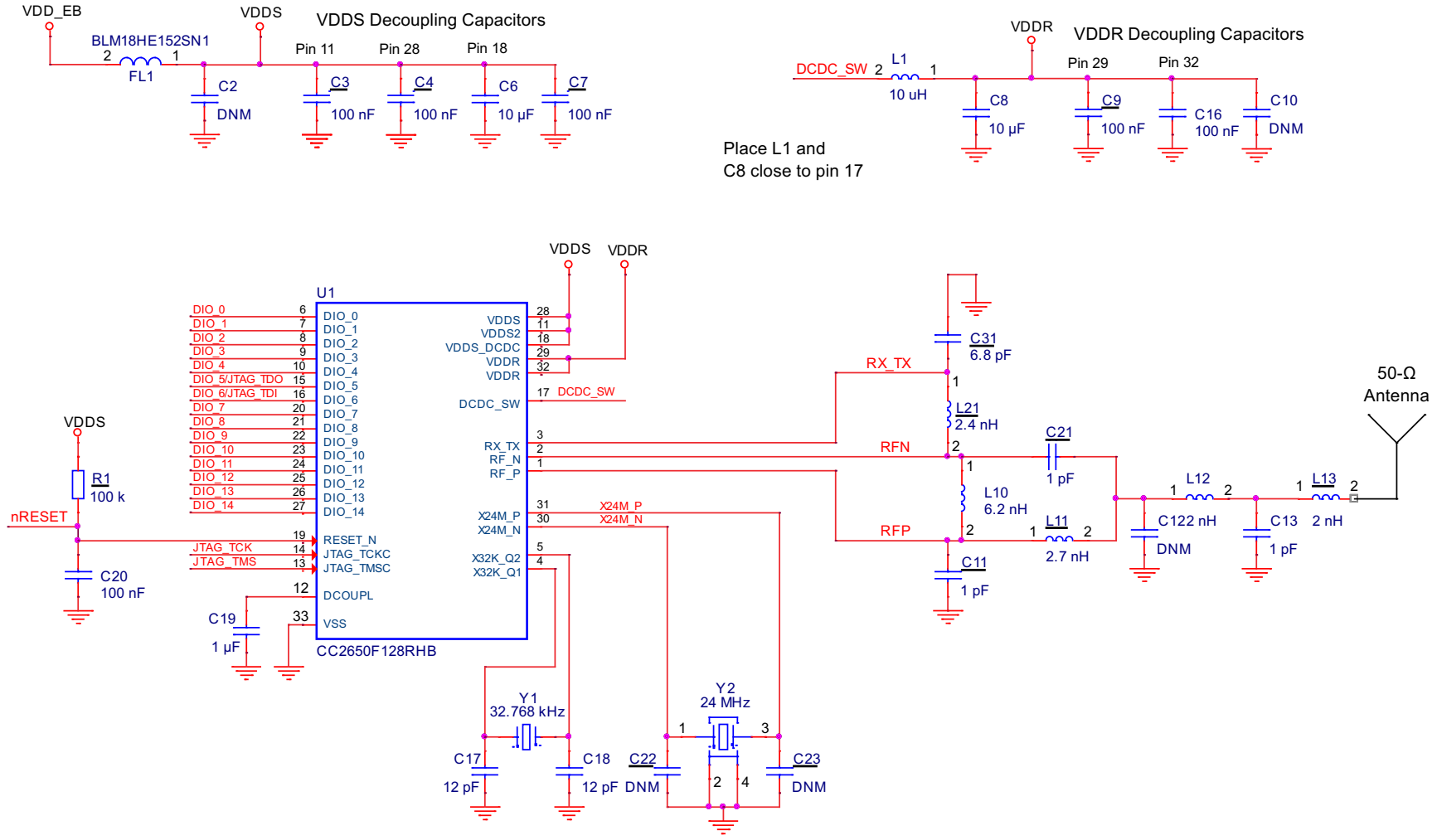

Copyright © 2016, Texas Instruments Incorporated

Figure 10-3. 5 × 5 External Differential (5XD) Application Circuit

10.2.1 Layout

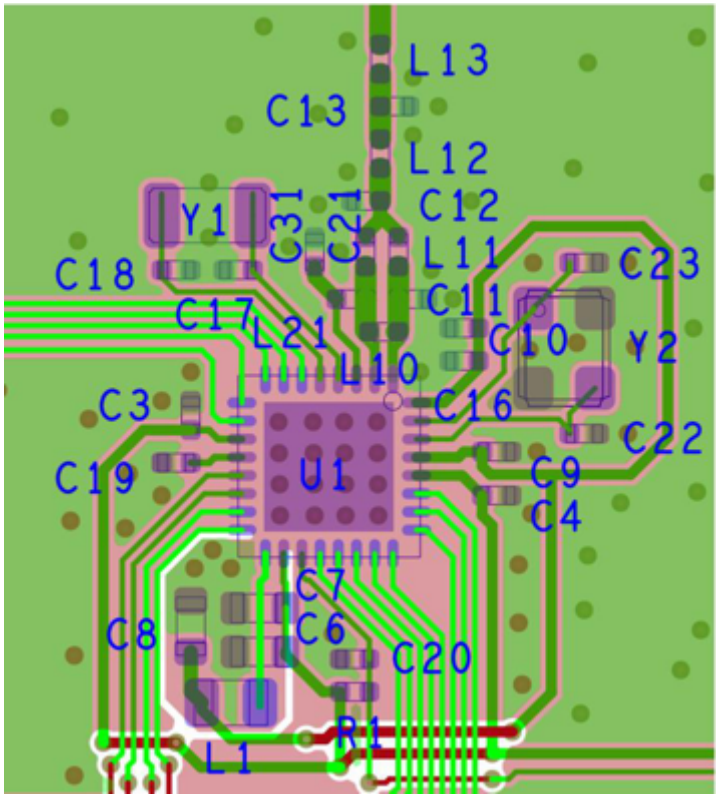

Figure 10-4. 5 × 5 External Differential (5XD) Layout

Copyright © 2020 Texas Instruments Incorporated

10.3 4 × 4 External Single-ended (4XS) Application Circuit

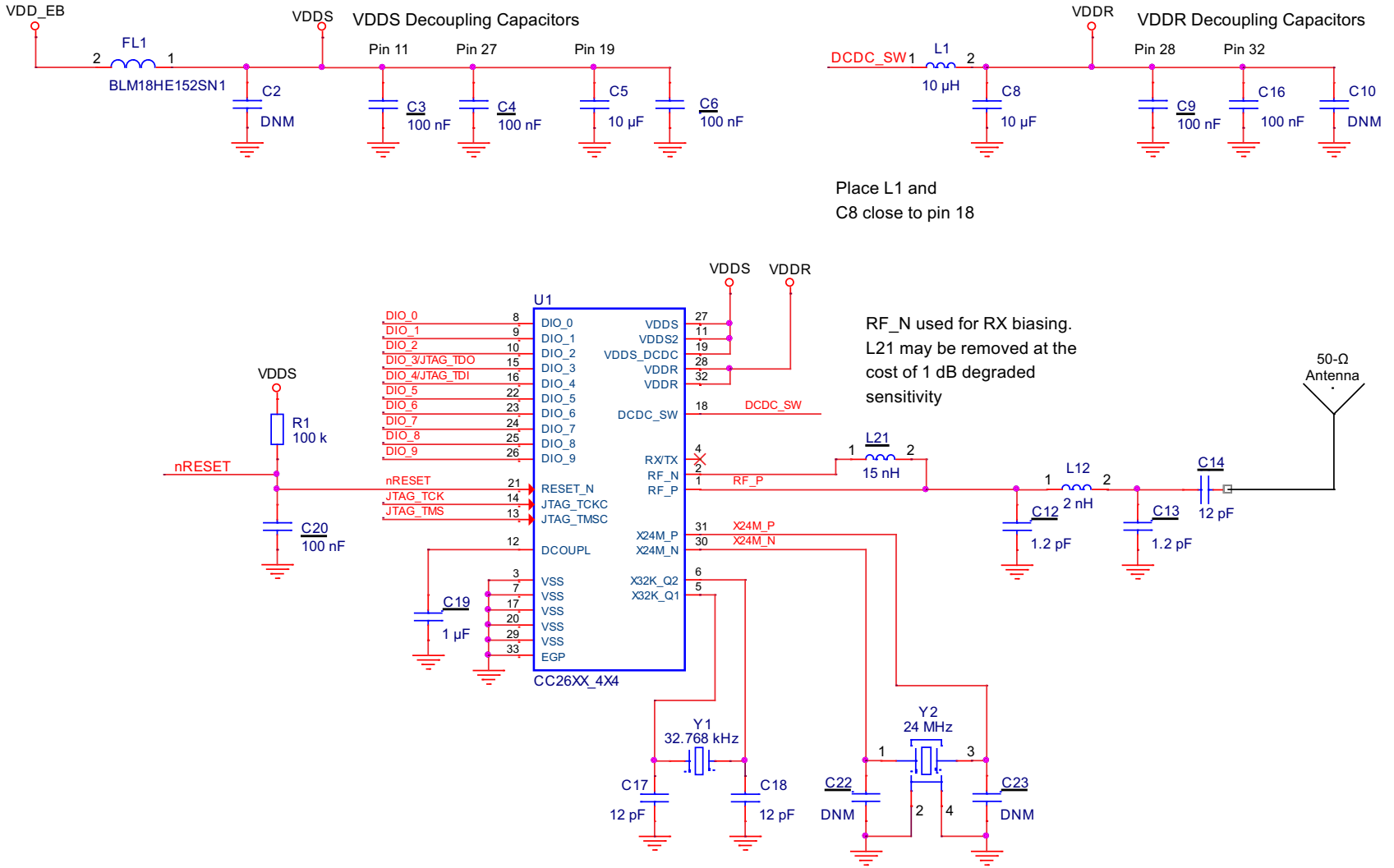

Copyright © 2016, Texas Instruments Incorporated

Figure 10-5. 4 × 4 External Single-ended (4XS) Application Circuit

10.3.1 Layout

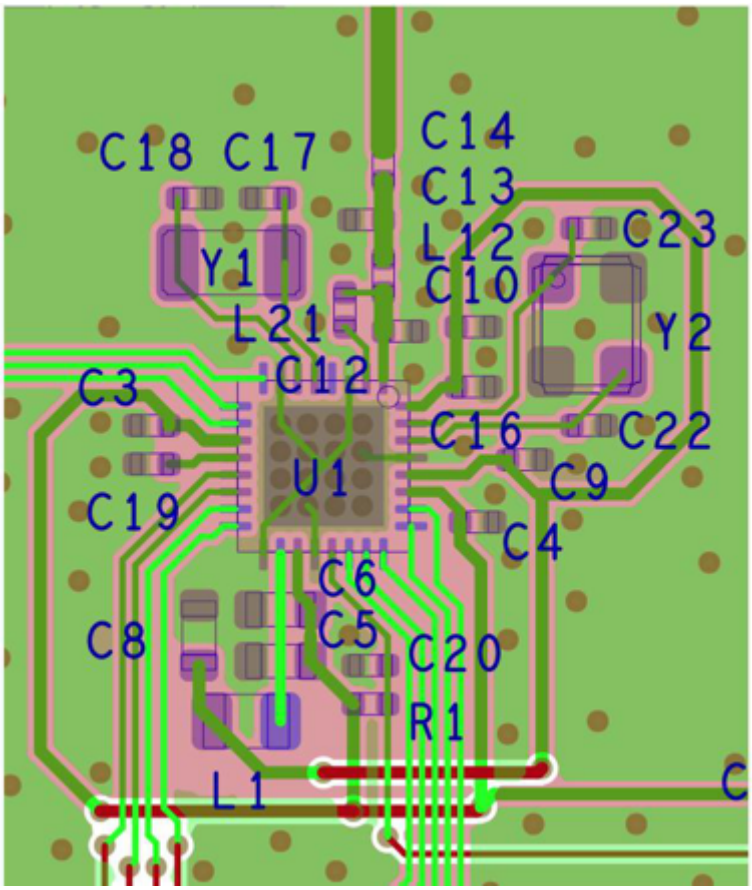

Figure 10-6. 4 × 4 External Single-ended (4XS) Layout

Copyright © 2020 Texas Instruments Incorporated

11 Device and Documentation Support

11.1 Device Nomenclature

To designate the stages in the product development cycle, TI assigns prefixes to all pre-production part numbers or date-code markings. Each device has one of three prefixes/identifications: X, P, or null (no prefix) (for example, CC2640R2F is in production; therefore, no prefix/identification is assigned).

Device development evolutionary flow:

X Experimental device that is not necessarily representative of the final device's electrical specifications and may not use production assembly flow.

P Prototype device that is not necessarily the final silicon die and may not necessarily meet final electrical specifications.

null Production version of the silicon die that is fully qualified.

Production devices have been characterized fully, and the quality and reliability of the device have been demonstrated fully. TI's standard warranty applies.

Predictions show that prototype devices (X or P) have a greater failure rate than the standard production devices. Texas Instruments recommends that these devices not be used in any production system because their expected end-use failure rate still is undefined. Only qualified production devices are to be used.

TI device nomenclature also includes a suffix with the device family name. This suffix indicates the package type (for example,).

For orderable part numbers of the *CC2640R2F* device *RSM, RHB, RGZ, or YFV* package types, see the Package Option Addendum of this document, the TI website (www.ti.com), or contact your TI sales representative.

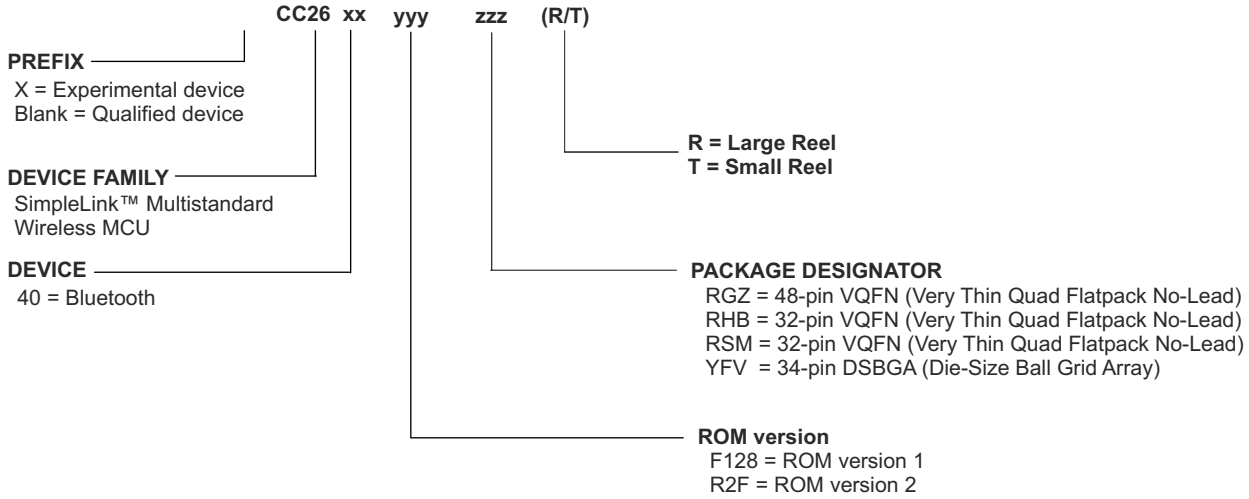

Figure 11-1. Device Nomenclature

11.2 Tools and Software

TI offers an extensive line of development tools, including tools to evaluate the performance of the processors, generate code, develop algorithm implementations, and fully integrate and debug software and hardware modules.

The following products support development of the CC2640R2F device applications:

Software Tools:

SmartRF Studio 7 is a PC application that helps designers of radio systems to easily evaluate the RF-IC at an early stage in the design process.

- Test functions for sending and receiving radio packets, continuous wave transmit and receive
- Evaluate RF performance on custom boards by wiring it to a supported evaluation board or debugger
- Can also be used without any hardware, but then only to generate, edit and export radio configuration settings
- Can be used in combination with several development kits for Texas Instruments' CCxxxx RF-ICs

Sensor Controller Studio provides a development environment for the CC26xx Sensor Controller. The Sensor Controller is a proprietary, power-optimized CPU in the CC26xx, which can perform simple background tasks autonomously and independent of the System CPU state.

- Allows for Sensor Controller task algorithms to be implemented using a C-like programming language
- Outputs a Sensor Controller Interface driver, which incorporates the generated Sensor Controller machine code and associated definitions
- Allows for rapid development by using the integrated Sensor Controller task testing and debugging functionality. This allows for live visualization of sensor data and algorithm verification.

IDEs and Compilers:

Code Composer Studio™ Integrated Development Environment (IDE):

- Integrated development environment with project management tools and editor
- Code Composer Studio (CCS) 7.0 and later has built-in support for the CC26xx device family
- Best support for XDS debuggers; XDS100v3, XDS110 and XDS200
- High integration with TI-RTOS with support for TI-RTOS Object View

IAR Embedded Workbench® for Arm®:

- Integrated development environment with project management tools and editor
- IAR EWARM 7.80.1 and later has built-in support for the CC26xx device family
- Broad debugger support, supporting XDS100v3, XDS200, IAR I-Jet and Segger J-Link
- Integrated development environment with project management tools and editor
- RTOS plugin available for TI-RTOS

For a complete listing of development-support tools for the CC2640R2F platform, visit the Texas Instruments website at www.ti.com . For information on pricing and availability, contact the nearest TI field sales office or authorized distributor.

Copyright © 2020 Texas Instruments Incorporated

11.3 Documentation Support

To receive notification of documentation updates, navigate to the device product folder on ti.com (**CC2640R2F**). In the upper right corner, click on Alert me to register and receive a weekly digest of any product information that has changed. For change details, review the revision history included in any revised document.

The current documentation that describes the CC2640R2F devices, related peripherals, and other technical collateral is listed in the following.

Technical Reference Manual

CC13xx, CC26xx SimpleLink™ Wireless MCU Technical Reference Manual

11.4 Texas Instruments Low-Power RF Website

Texas Instruments' Low-Power RF website has all the latest products, application and design notes, FAQ section, news and events updates. Go to www.ti.com/lprf.

11.5 Low-Power RF eNewsletter

The Low-Power RF eNewsletter is up-to-date on new products, news releases, developers' news, and other news and events associated with low-power RF products from TI. The Low-Power RF eNewsletter articles include links to get more online information.

Sign up at: www.ti.com/lprfnewsletter

11.6 Support Resources

TI E2E™ support forums are an engineer's go-to source for fast, verified answers and design help — straight from the experts. Search existing answers or ask your own question to get the quick design help you need.

Linked content is provided "AS IS" by the respective contributors. They do not constitute TI specifications and do not necessarily reflect TI's views; see TI's Terms of Use.

11.7 Trademarks

SmartRF™, Code Composer Studio™, LaunchPad™, TI E2E™ are trademarks of Texas Instruments.
IEEE Std 1241™ is a trademark of Institute of Electrical and Electronics Engineers, Incorporated.
ARM7™ is a trademark of Arm Limited (or its subsidiaries).
Arm®, Cortex®, and Thumb® are registered trademarks of Arm Limited (or its subsidiaries).
CoreMark® is a registered trademark of Embedded Microprocessor Benchmark Consortium.
Bluetooth® is a registered trademark of Bluetooth SIG Inc.
IAR Embedded Workbench® are registered trademarks of IAR Systems AB.
Wi-Fi® is a registered trademark of Wi-Fi Alliance.
ZigBee® is a registered trademark of ZigBee Alliance.
All other trademarks are the property of their respective owners.

11.8 Electrostatic Discharge Caution

This integrated circuit can be damaged by ESD. Texas Instruments recommends that all integrated circuits be handled with appropriate precautions. Failure to observe proper handling and installation procedures can cause damage.

ESD damage can range from subtle performance degradation to complete device failure. Precision integrated circuits may be more susceptible to damage because very small parametric changes could cause the device not to meet its published specifications.

11.9 Export Control Notice

Recipient agrees to not knowingly export or re-export, directly or indirectly, any product or technical data (as defined by the U.S., EU, and other Export Administration Regulations) including software, or any controlled product restricted by other applicable national regulations, received from disclosing party under nondisclosure obligations (if any), or any direct product of such technology, to any destination to which such export or re-export

is restricted or prohibited by U.S. or other applicable laws, without obtaining prior authorization from U.S. Department of Commerce and other competent Government authorities to the extent required by those laws.

11.10 Glossary

TI Glossary This glossary lists and explains terms, acronyms, and definitions.

Copyright © 2020 Texas Instruments Incorporated

12 Mechanical, Packaging, and Orderable Information

12.1 Packaging Information

The following pages include mechanical packaging and orderable information. This information is the most current data available for the designated devices. This data is subject to change without notice and revision of this document. For browser-based versions of this data sheet, refer to the left-hand navigation.

PACKAGING INFORMATION

Orderable part number	Status (1)	Material type (2)	Package | Pins	Package qty | Carrier	RoHS (3)	Lead finish/ Ball material (4)	MSL rating/ Peak reflow (5)	Op temp (°C)	Part marking (6)
CC2640R2FRGZR	Active	Production	VQFN (RGZ) | 48	2500 | LARGE T&R	Yes	NIPDAU | NIPDAUAG	Level-3-260C-168 HR	-40 to 85	CC2640 R2F
CC2640R2FRGZR.A	Active	Production	VQFN (RGZ) | 48	2500 | LARGE T&R	Yes	NIPDAU	Level-3-260C-168 HR	-40 to 85	CC2640 R2F
CC2640R2FRGZR.B	Active	Production	VQFN (RGZ) | 48	2500 | LARGE T&R	Yes	NIPDAU	Level-3-260C-168 HR	-40 to 85	CC2640 R2F
CC2640R2FRGZRG4	Active	Production	VQFN (RGZ) | 48	2500 | LARGE T&R	Yes	NIPDAU	Level-3-260C-168 HR	-40 to 85	CC2640 R2F
CC2640R2FRGZRG4.A	Active	Production	VQFN (RGZ) | 48	2500 | LARGE T&R	Yes	NIPDAU	Level-3-260C-168 HR	-40 to 85	CC2640 R2F
CC2640R2FRGZRG4.B	Active	Production	VQFN (RGZ) | 48	2500 | LARGE T&R	Yes	NIPDAU	Level-3-260C-168 HR	-40 to 85	CC2640 R2F
CC2640R2FRGZT	Active	Production	VQFN (RGZ) | 48	250 | SMALL T&R	Yes	NIPDAU | NIPDAUAG	Level-3-260C-168 HR	-40 to 85	CC2640 R2F
CC2640R2FRGZT.A	Active	Production	VQFN (RGZ) | 48	250 | SMALL T&R	Yes	NIPDAU	Level-3-260C-168 HR	-40 to 85	CC2640 R2F
CC2640R2FRGZT.B	Active	Production	VQFN (RGZ) | 48	250 | SMALL T&R	Yes	NIPDAU	Level-3-260C-168 HR	-40 to 85	CC2640 R2F
CC2640R2FRHBR	Active	Production	VQFN (RHB) | 32	2500 | LARGE T&R	Yes	NIPDAU | NIPDAUAG	Level-3-260C-168 HR	-40 to 85	CC2640 R2F
CC2640R2FRHBR.A	Active	Production	VQFN (RHB) | 32	2500 | LARGE T&R	Yes	NIPDAU	Level-3-260C-168 HR	-40 to 85	CC2640 R2F
CC2640R2FRHBR.B	Active	Production	VQFN (RHB) | 32	2500 | LARGE T&R	Yes	NIPDAU	Level-3-260C-168 HR	-40 to 85	CC2640 R2F
CC2640R2FRHBT	Active	Production	VQFN (RHB) | 32	250 | SMALL T&R	Yes	NIPDAU | SN | NIPDAUAG	Level-3-260C-168 HR	-40 to 85	CC2640 R2F
CC2640R2FRHBT.A	Active	Production	VQFN (RHB) | 32	250 | SMALL T&R	Yes	NIPDAU	Level-3-260C-168 HR	-40 to 85	CC2640 R2F
CC2640R2FRHBT.B	Active	Production	VQFN (RHB) | 32	250 | SMALL T&R	Yes	NIPDAU	Level-3-260C-168 HR	-40 to 85	CC2640 R2F
CC2640R2FRSMR	Active	Production	VQFN (RSM) | 32	3000 | LARGE T&R	Yes	NIPDAU | SN | NIPDAUAG	Level-3-260C-168 HR	-40 to 85	CC2640 R2F

Orderable part number	Status (1)	Material type (2)	Package | Pins	Package qty | Carrier	RoHS (3)	Lead finish/ Ball material (4)	MSL rating/ Peak reflow (5)	Op temp (°C)	Part marking (6)
CC2640R2FRSMR.A	Active	Production	VQFN (RSM) | 32	3000 | LARGE T&R	Yes	NIPDAU	Level-3-260C-168 HR	-40 to 85	CC2640 R2F
CC2640R2FRSMR.B	Active	Production	VQFN (RSM) | 32	3000 | LARGE T&R	Yes	NIPDAU	Level-3-260C-168 HR	-40 to 85	CC2640 R2F
CC2640R2FRSMT	Active	Production	VQFN (RSM) | 32	250 | SMALL T&R	Yes	NIPDAU | SN | NIPDAUAG	Level-3-260C-168 HR	-40 to 85	CC2640 R2F
CC2640R2FRSMT.A	Active	Production	VQFN (RSM) | 32	250 | SMALL T&R	Yes	NIPDAU	Level-3-260C-168 HR	-40 to 85	CC2640 R2F
CC2640R2FRSMT.B	Active	Production	VQFN (RSM) | 32	250 | SMALL T&R	Yes	NIPDAU	Level-3-260C-168 HR	-40 to 85	CC2640 R2F
CC2640R2FYFVR	Active	Production	DSBGA (YFV) | 34	2500 | LARGE T&R	Yes	SNAGCU	Level-1-260C-UNLIM	-40 to 85	CC2640
CC2640R2FYFVR.B	Active	Production	DSBGA (YFV) | 34	2500 | LARGE T&R	Yes	SNAGCU	Level-1-260C-UNLIM	-40 to 85	CC2640
CC2640R2FYFVT	Active	Production	DSBGA (YFV) | 34	250 | LARGE T&R	Yes	SNAGCU	Level-1-260C-UNLIM	-40 to 85	CC2640
CC2640R2FYFVT.B	Active	Production	DSBGA (YFV) | 34	250 | LARGE T&R	Yes	SNAGCU	Level-1-260C-UNLIM	-40 to 85	CC2640

(1) **Status:** For more details on status, see our product life cycle.

(2) **Material type:** When designated, preproduction parts are prototypes/experimental devices, and are not yet approved or released for full production. Testing and final process, including without limitation quality assurance, reliability performance testing, and/or process qualification, may not yet be complete, and this item is subject to further changes or possible discontinuation. If available for ordering, purchases will be subject to an additional waiver at checkout, and are intended for early internal evaluation purposes only. These items are sold without warranties of any kind.

(3) **RoHS values:** Yes, No, RoHS Exempt. See the TI RoHS Statement for additional information and value definition.

(4) **Lead finish/Ball material:** Parts may have multiple material finish options. Finish options are separated by a vertical ruled line. Lead finish/Ball material values may wrap to two lines if the finish value exceeds the maximum column width.

(5) **MSL rating/Peak reflow:** The moisture sensitivity level ratings and peak solder (reflow) temperatures. In the event that a part has multiple moisture sensitivity ratings, only the lowest level per JEDEC standards is shown. Refer to the shipping label for the actual reflow temperature that will be used to mount the part to the printed circuit board.

(6) **Part marking:** There may be an additional marking, which relates to the logo, the lot trace code information, or the environmental category of the part.

Multiple part markings will be inside parentheses. Only one part marking contained in parentheses and separated by a "~" will appear on a part. If a line is indented then it is a continuation of the previous line and the two combined represent the entire part marking for that device.

Important Information and Disclaimer: The information provided on this page represents TI's knowledge and belief as of the date that it is provided. TI bases its knowledge and belief on information provided by third parties, and makes no representation or warranty as to the accuracy of such information. Efforts are underway to better integrate information from third parties. TI has taken and continues to take reasonable steps to provide representative and accurate information but may not have conducted destructive testing or chemical analysis on incoming materials and chemicals. TI and TI suppliers consider certain information to be proprietary, and thus CAS numbers and other limited information may not be available for release.

In no event shall TI's liability arising out of such information exceed the total purchase price of the TI part(s) at issue in this document sold by TI to Customer on an annual basis.

OTHER QUALIFIED VERSIONS OF CC2640R2F :

- Automotive : CC2640R2F-Q1

NOTE: Qualified Version Definitions:

- Automotive - Q100 devices qualified for high-reliability automotive applications targeting zero defects

TAPE AND REEL INFORMATION

REEL DIMENSIONS

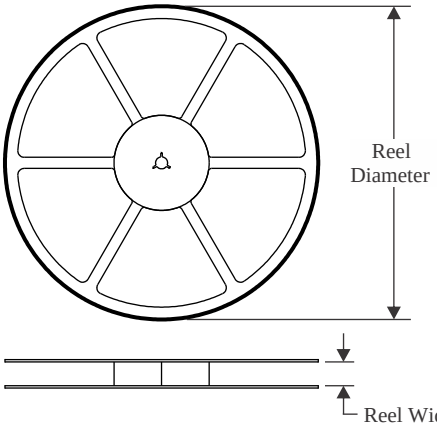

TAPE DIMENSIONS

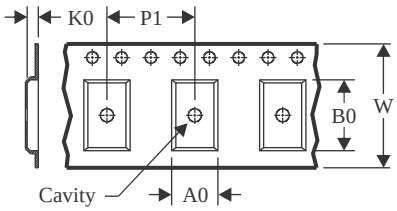

A0	Dimension designed to accommodate the component width
B0	Dimension designed to accommodate the component length
K0	Dimension designed to accommodate the component thickness
W	Overall width of the carrier tape
P1	Pitch between successive cavity centers

QUADRANT ASSIGNMENTS FOR PIN 1 ORIENTATION IN TAPE

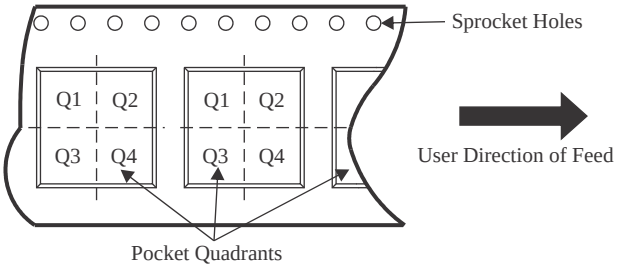

*All dimensions are nominal

Device	Package Type	Package Drawing	Pins	SPQ	Reel Diameter (mm)	Reel Width W1 (mm)	A0 (mm)	B0 (mm)	K0 (mm)	P1 (mm)	W (mm)	Pin1 Quadrant
CC2640R2FRGZR	VQFN	RGZ	48	2500	330.0	16.4	7.3	7.3	1.1	12.0	16.0	Q2
CC2640R2FRGZR	VQFN	RGZ	48	2500	330.0	16.4	7.3	7.3	1.1	12.0	16.0	Q2
CC2640R2FRGZR	VQFN	RGZ	48	2500	330.0	16.4	7.3	7.3	1.1	12.0	16.0	Q2
CC2640R2FRGZRG4	VQFN	RGZ	48	2500	330.0	16.4	7.3	7.3	1.1	12.0	16.0	Q2
CC2640R2FRGZT	VQFN	RGZ	48	250	180.0	16.4	7.3	7.3	1.1	12.0	16.0	Q2
CC2640R2FRHBR	VQFN	RHB	32	2500	330.0	12.4	5.3	5.3	1.1	8.0	12.0	Q2
CC2640R2FRHBR	VQFN	RHB	32	2500	330.0	12.4	5.3	5.3	1.1	8.0	12.0	Q2
CC2640R2FRHBT	VQFN	RHB	32	250	180.0	12.4	5.3	5.3	1.1	8.0	12.0	Q2
CC2640R2FRSMR	VQFN	RSM	32	3000	330.0	12.4	4.25	4.25	1.15	8.0	12.0	Q2
CC2640R2FRSMR	VQFN	RSM	32	3000	330.0	12.4	4.25	4.25	1.15	8.0	12.0	Q2
CC2640R2FRSMR	VQFN	RSM	32	3000	330.0	12.4	4.3	4.3	1.3	8.0	12.0	Q2
CC2640R2FRSMT	VQFN	RSM	32	250	180.0	12.4	4.25	4.25	1.15	8.0	12.0	Q2
CC2640R2FYFVR	DSBGA	YFV	34	2500	180.0	8.4	2.75	2.75	0.81	4.0	8.0	Q1
CC2640R2FYFVT	DSBGA	YFV	34	250	180.0	8.4	2.75	2.75	0.81	4.0	8.0	Q1

TAPE AND REEL BOX DIMENSIONS

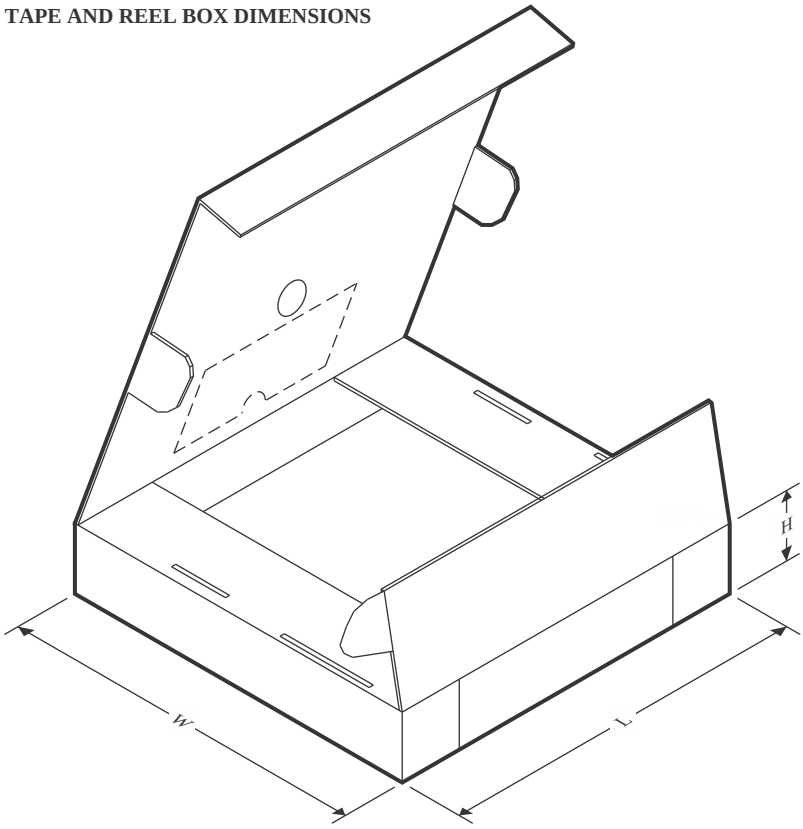

*All dimensions are nominal

Device	Package Type	Package Drawing	Pins	SPQ	Length (mm)	Width (mm)	Height (mm)
CC2640R2FRGZR	VQFN	RGZ	48	2500	367.0	367.0	35.0
CC2640R2FRGZR	VQFN	RGZ	48	2500	360.0	360.0	36.0
CC2640R2FRGZR	VQFN	RGZ	48	2500	353.0	353.0	32.0
CC2640R2FRGZRG4	VQFN	RGZ	48	2500	336.6	336.6	31.8
CC2640R2FRGZT	VQFN	RGZ	48	250	210.0	185.0	35.0
CC2640R2FRHBR	VQFN	RHB	32	2500	367.0	367.0	35.0
CC2640R2FRHBR	VQFN	RHB	32	2500	360.0	360.0	36.0
CC2640R2FRHBT	VQFN	RHB	32	250	210.0	185.0	35.0
CC2640R2FRSMR	VQFN	RSM	32	3000	367.0	367.0	35.0
CC2640R2FRSMR	VQFN	RSM	32	3000	360.0	360.0	36.0
CC2640R2FRSMR	VQFN	RSM	32	3000	353.0	353.0	32.0
CC2640R2FRSMT	VQFN	RSM	32	250	210.0	185.0	35.0
CC2640R2FYFVR	DSBGA	YFV	34	2500	182.0	182.0	20.0
CC2640R2FYFVT	DSBGA	YFV	34	250	182.0	182.0	20.0

TRAY

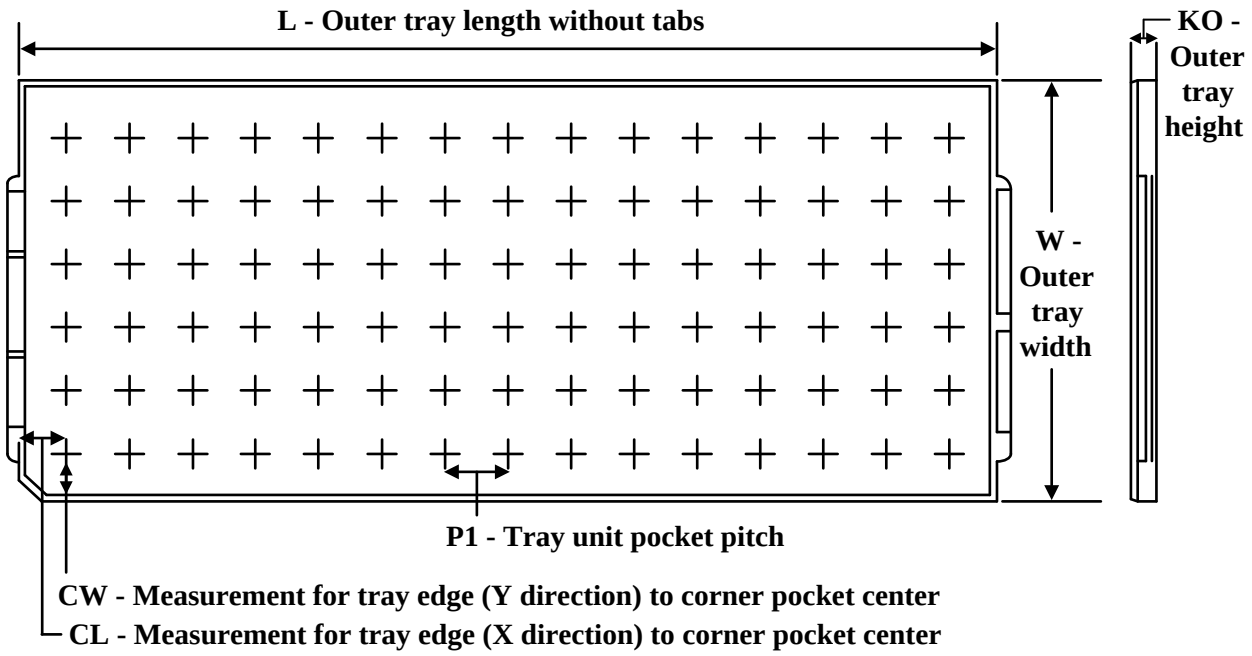

Chamfer on Tray corner indicates Pin 1 orientation of packed units.

*All dimensions are nominal

Device	Package Name	Package Type	Pins	SPQ	Unit array matrix	Max temperature (°C)	L (mm)	W (mm)	K0 (µm)	P1 (mm)	CL (mm)	CW (mm)
CC2640R2FRHBR	RHB	VQFN	32	2500	14 x 35	150	315	135.9	7620	8.8	7.9	8.15
CC2640R2FRHBR	RHB	VQFN	32	2500	14 x 35	150	315	135.9	7620	8.8	7.9	8.15
CC2640R2FRHBR.A	RHB	VQFN	32	2500	14 x 35	150	315	135.9	7620	8.8	7.9	8.15
CC2640R2FRHBR.A	RHB	VQFN	32	2500	14 x 35	150	315	135.9	7620	8.8	7.9	8.15
CC2640R2FRHBR.B	RHB	VQFN	32	2500	14 x 35	150	315	135.9	7620	8.8	7.9	8.15
CC2640R2FRHBR.B	RHB	VQFN	32	2500	14 x 35	150	315	135.9	7620	8.8	7.9	8.15
CC2640R2FRHBT	RHB	VQFN	32	250	14 x 35	150	315	135.9	7620	8.8	7.9	8.15
CC2640R2FRHBT	RHB	VQFN	32	250	14 x 35	150	315	135.9	7620	8.8	7.9	8.15
CC2640R2FRHBT.A	RHB	VQFN	32	250	14 x 35	150	315	135.9	7620	8.8	7.9	8.15
CC2640R2FRHBT.A	RHB	VQFN	32	250	14 x 35	150	315	135.9	7620	8.8	7.9	8.15
CC2640R2FRHBT.B	RHB	VQFN	32	250	14 x 35	150	315	135.9	7620	8.8	7.9	8.15
CC2640R2FRHBT.B	RHB	VQFN	32	250	14 x 35	150	315	135.9	7620	8.8	7.9	8.15
CC2640R2FRSMR	RSM	VQFN	32	3000	14 x 35	150	315	135.9	7620	8.8	7.9	8.15
CC2640R2FRSMR.A	RSM	VQFN	32	3000	14 x 35	150	315	135.9	7620	8.8	7.9	8.15
CC2640R2FRSMR.B	RSM	VQFN	32	3000	14 x 35	150	315	135.9	7620	8.8	7.9	8.15
CC2640R2FRSMT	RSM	VQFN	32	250	14 x 35	150	315	135.9	7620	8.8	7.9	8.15
CC2640R2FRSMT	RSM	VQFN	32	250	14 x 35	150	315	135.9	7620	8.8	7.9	8.15

Device	Package Name	Package Type	Pins	SPQ	Unit array matrix	Max temperature (°C)	L (mm)	W (mm)	K0 (µm)	P1 (mm)	CL (mm)	CW (mm)
CC2640R2FRSMT.A	RSM	VQFN	32	250	14 x 35	150	315	135.9	7620	8.8	7.9	8.15
CC2640R2FRSMT.A	RSM	VQFN	32	250	14 x 35	150	315	135.9	7620	8.8	7.9	8.15
CC2640R2FRSMT.B	RSM	VQFN	32	250	14 x 35	150	315	135.9	7620	8.8	7.9	8.15
CC2640R2FRSMT.B	RSM	VQFN	32	250	14 x 35	150	315	135.9	7620	8.8	7.9	8.15

GENERIC PACKAGE VIEW

RGZ 48

VQFN - 1 mm max height

7 x 7, 0.5 mm pitch

PLASTIC QUADFLAT PACK- NO LEAD

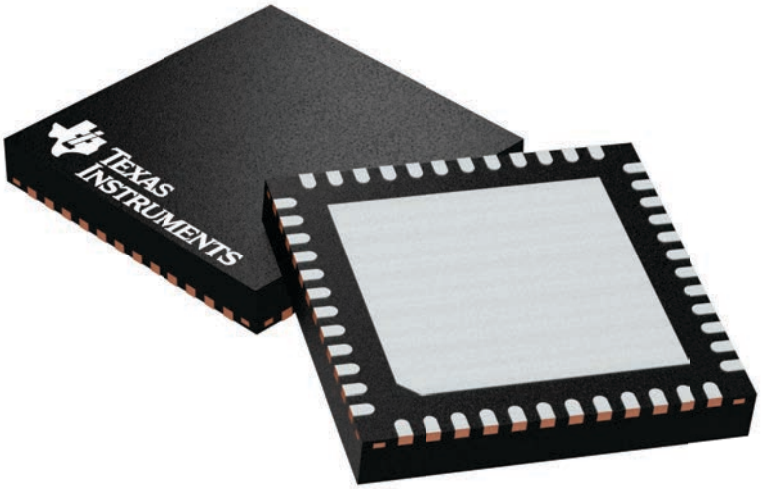

Images above are just a representation of the package family, actual package may vary.
Refer to the product data sheet for package details.

4224671/A

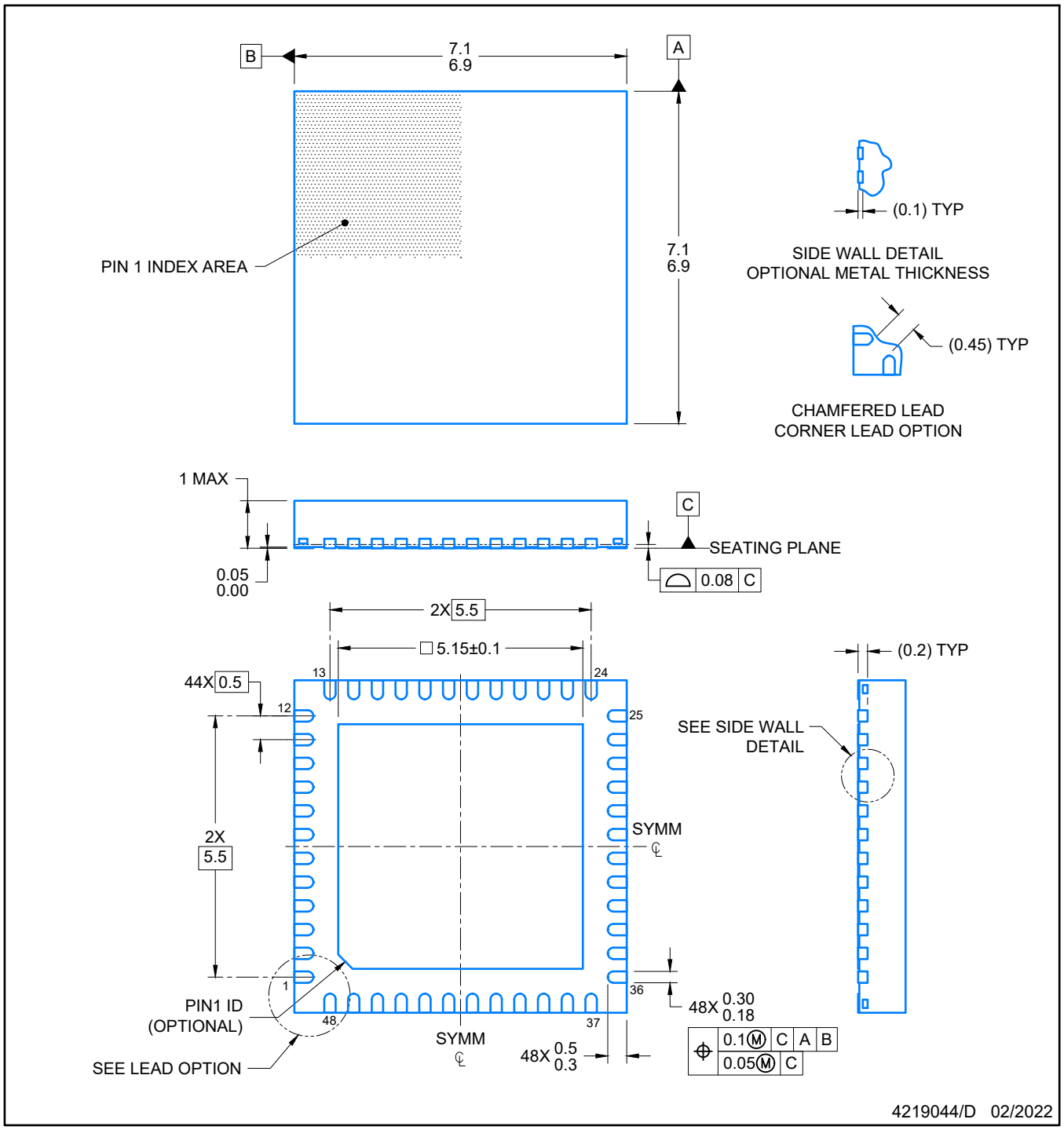

NOTES:

1. All linear dimensions are in millimeters. Any dimensions in parenthesis are for reference only. Dimensioning and tolerancing per ASME Y14.5M.
2. This drawing is subject to change without notice.
3. The package thermal pad must be soldered to the printed circuit board for optimal thermal and mechanical performance.

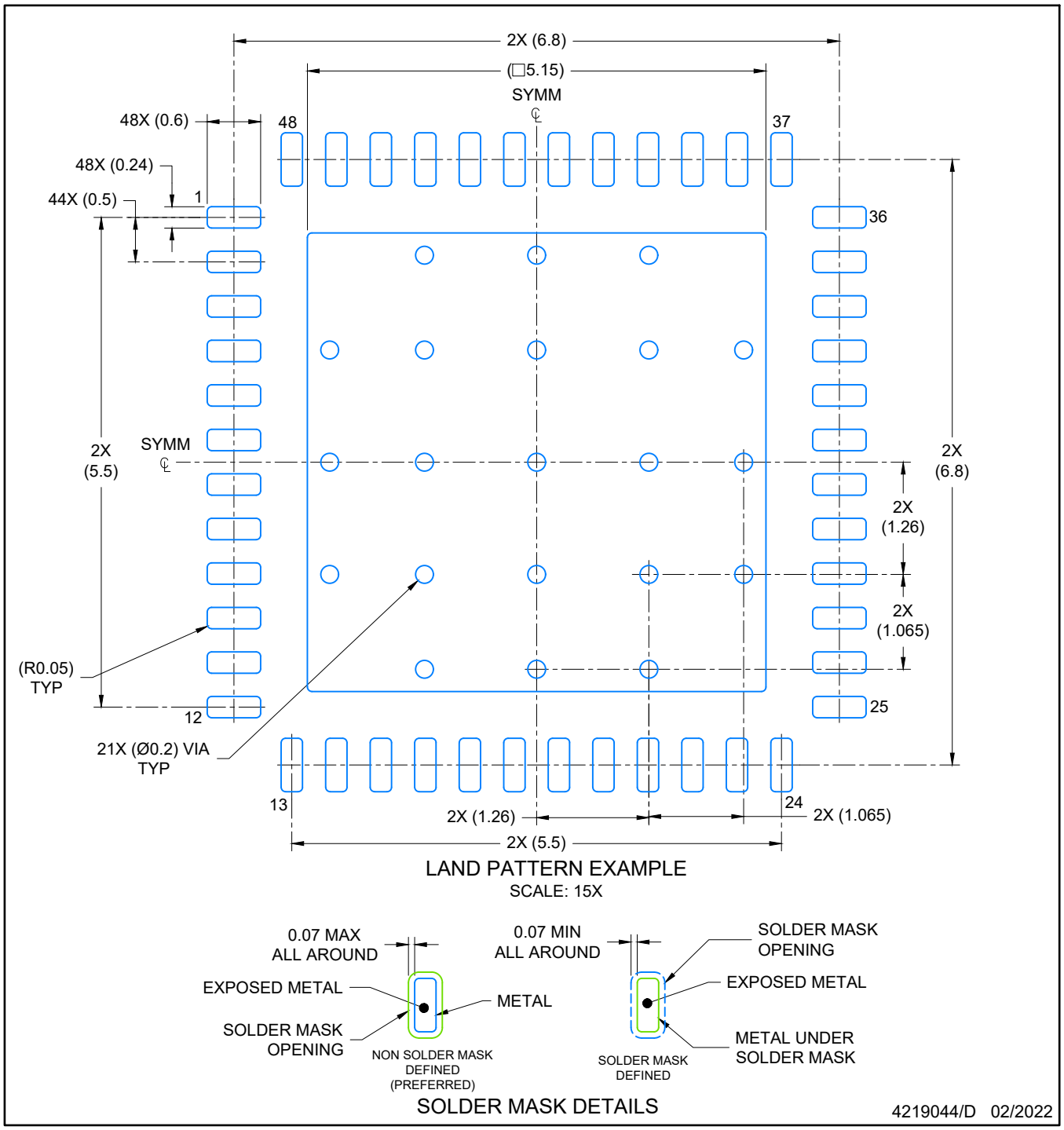

NOTES: (continued)

4. This package is designed to be soldered to a thermal pad on the board. For more information, see Texas Instruments literature number SLUA271 (www.ti.com/lit/slua271).
5. Vias are optional depending on application, refer to device data sheet. If any vias are implemented, refer to their locations shown on this view. It is recommended that vias under paste be filled, plugged or tented.

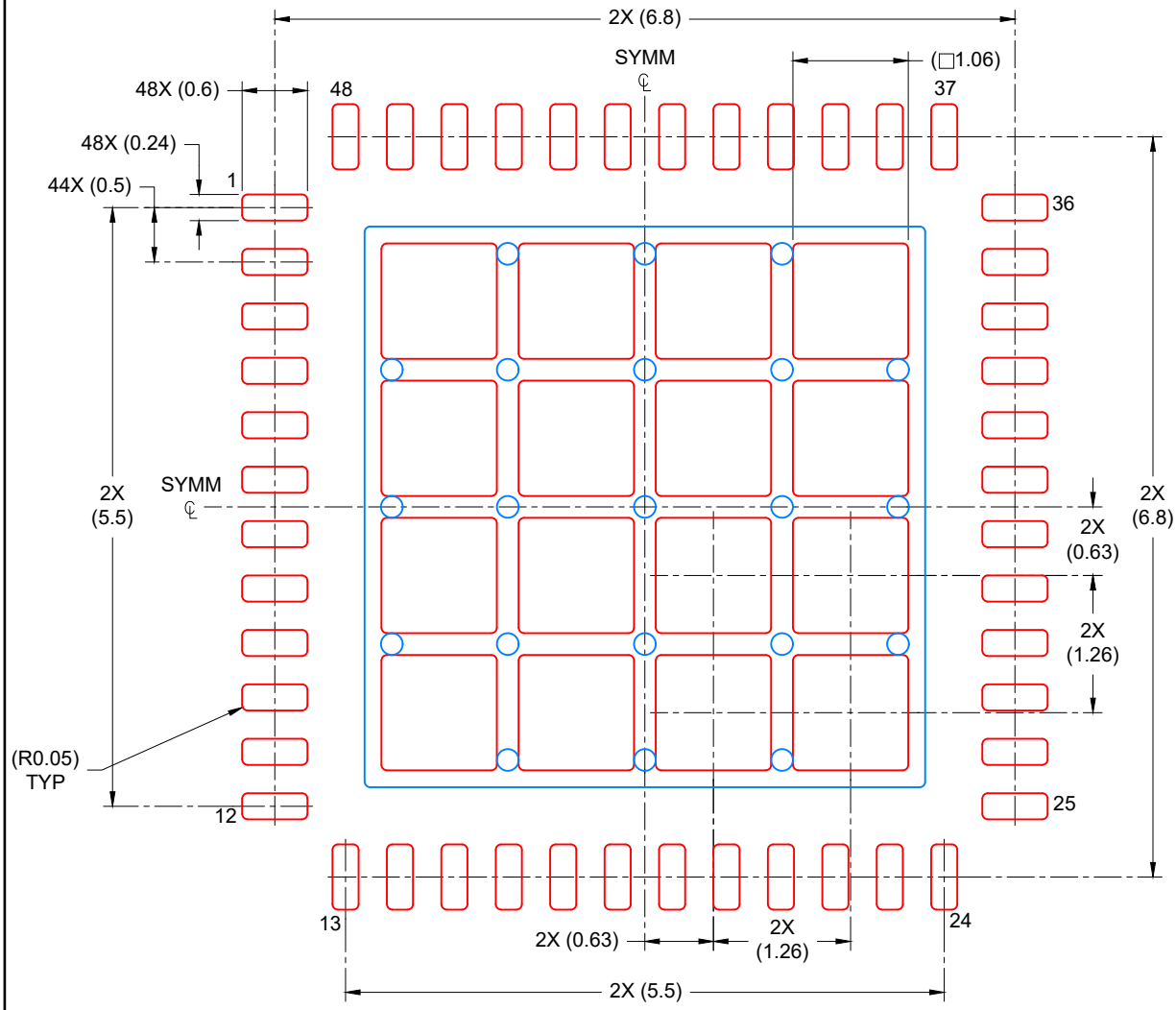

SOLDER PASTE EXAMPLE
BASED ON 0.125 mm THICK STENCIL

EXPOSED PAD
67% PRINTED COVERAGE BY AREA
SCALE: 15X

4219044/D 02/2022

NOTES: (continued)

6. Laser cutting apertures with trapezoidal walls and rounded corners may offer better paste release. IPC-7525 may have alternate design recommendations.

YFV (R–XBGA–N34) DIE–SIZE BALL GRID ARRAY (WCSP)

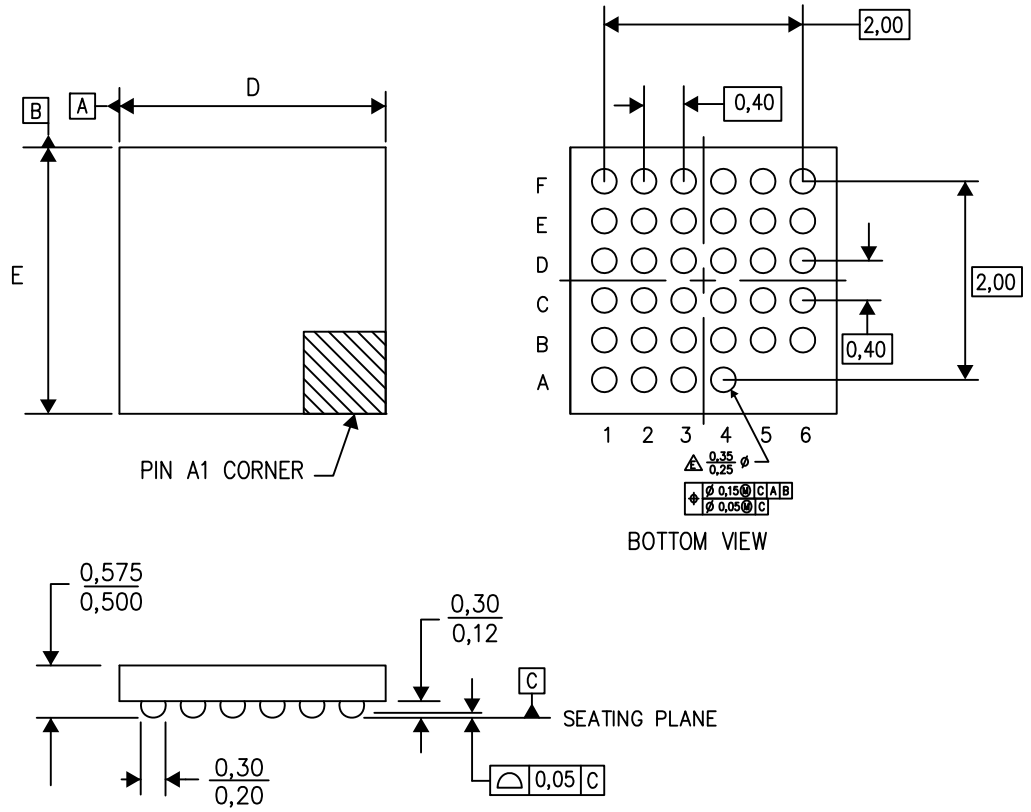

D: Max = 2.714 mm, Min =2.654 mm

E: Max = 2.714 mm, Min =2.654 mm

4209189–15/0 11/14

NOTES: A. All linear dimensions are in millimeters. Dimensioning and tolerancing per ASME Y14.5M–1994.
B. This drawing is subject to change without notice.
C. NanoFree™ package configuration.
D. This package contains Pb–free balls.

NanoFree is a trademark of Texas Instruments.

GENERIC PACKAGE VIEW

RSM 32

VQFN - 1 mm max height

4 x 4, 0.4 mm pitch

PLASTIC QUAD FLATPACK - NO LEAD

This image is a representation of the package family, actual package may vary.
Refer to the product data sheet for package details.

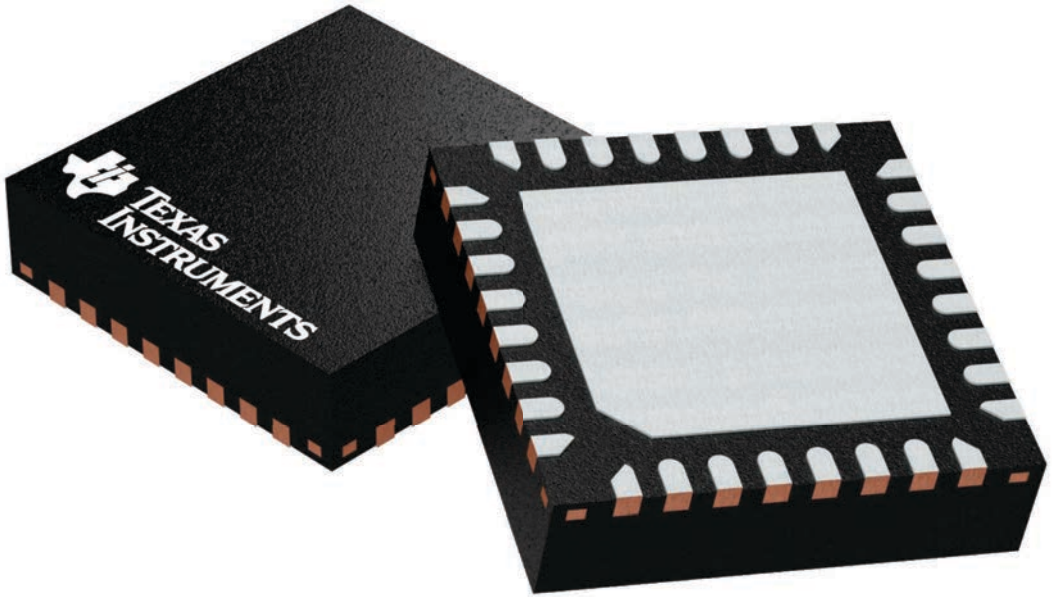

4224982/A

RSM0032B

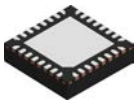

PACKAGE OUTLINE

VQFN - 1 mm max height

PLASTIC QUAD FLATPACK - NO LEAD

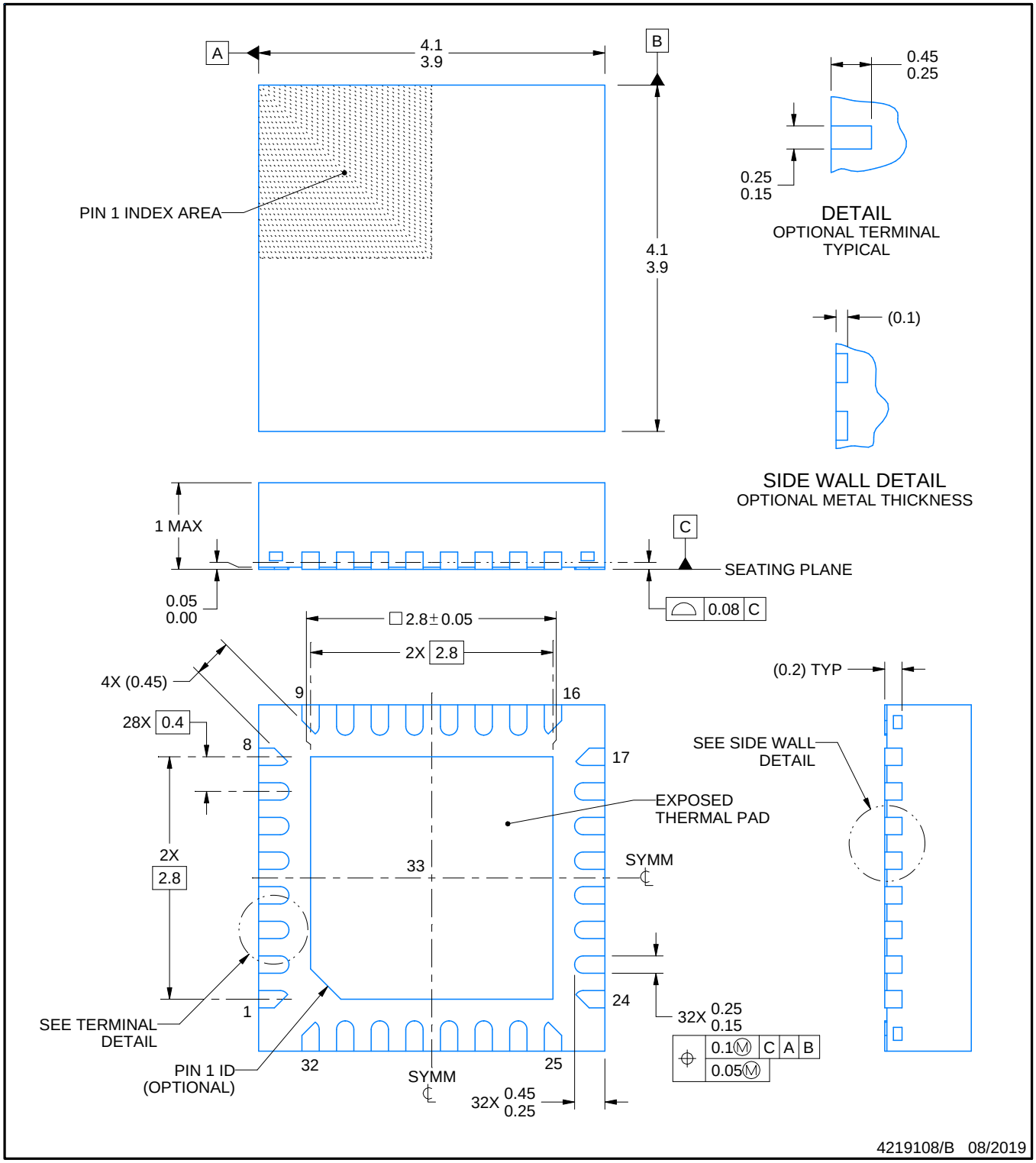

NOTES:

1. All linear dimensions are in millimeters. Any dimensions in parenthesis are for reference only. Dimensioning and tolerancing per ASME Y14.5M.
2. This drawing is subject to change without notice.
3. The package thermal pad must be soldered to the printed circuit board for thermal and mechanical performance.

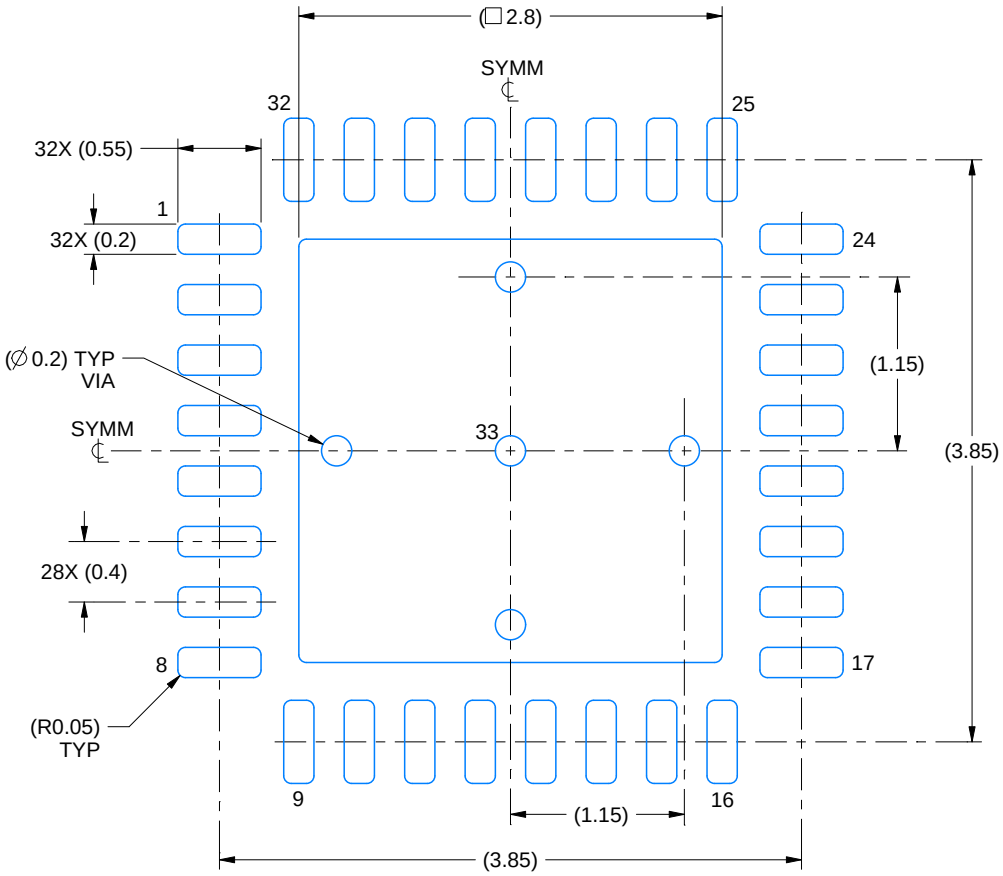

LAND PATTERN EXAMPLE
EXPOSED METAL SHOWN
SCALE:20X

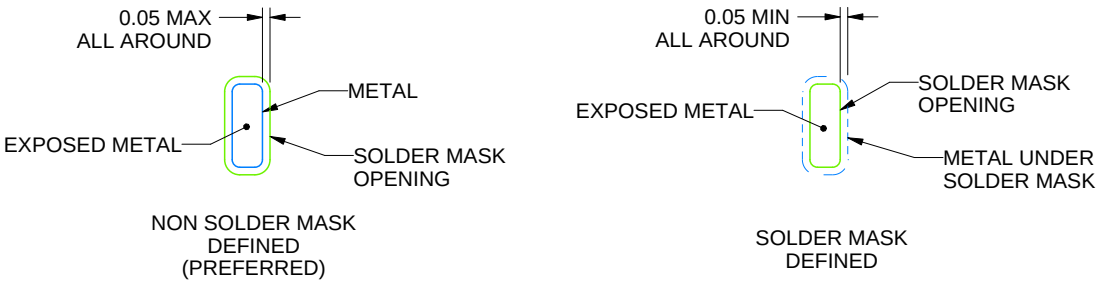

SOLDER MASK DETAILS

4219108/B 08/2019

NOTES: (continued)

4. This package is designed to be soldered to a thermal pad on the board. For more information, see Texas Instruments literature number SLUA271 (www.ti.com/lit/slua271).
5. Vias are optional depending on application, refer to device data sheet. If any vias are implemented, refer to their locations shown on this view. It is recommended that vias under paste be filled, plugged or tented.

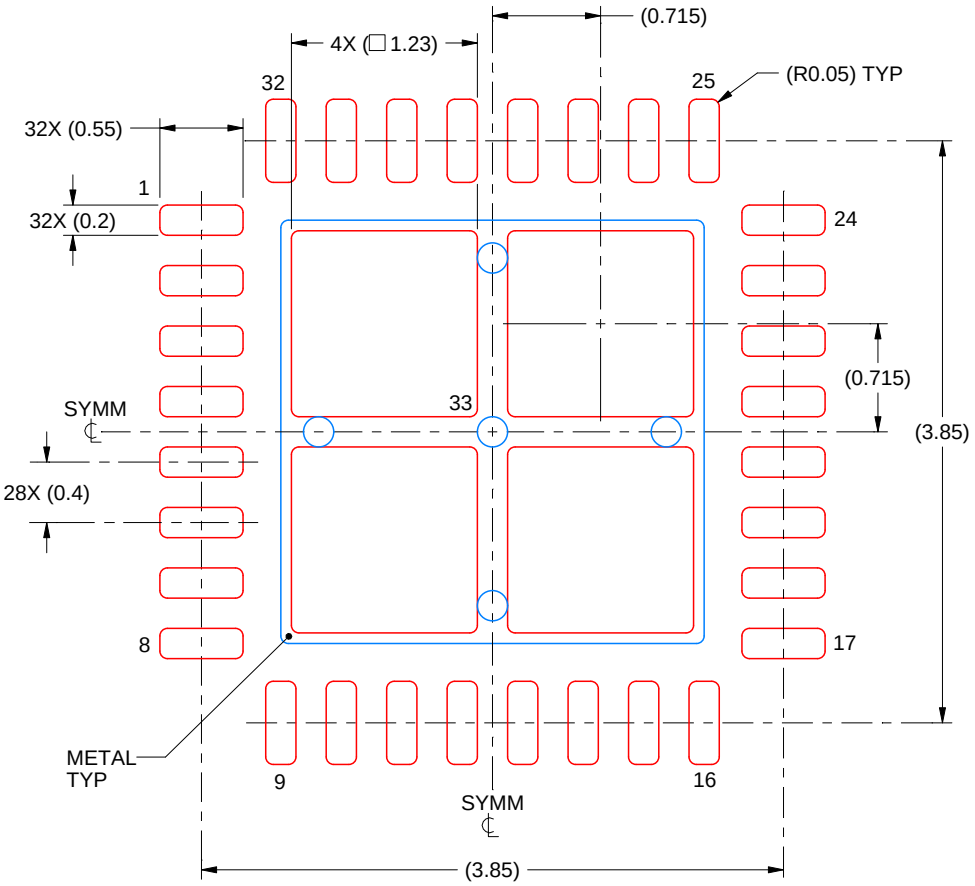

SOLDER PASTE EXAMPLE
BASED ON 0.1 mm THICK STENCIL

EXPOSED PAD 33:
77% PRINTED SOLDER COVERAGE BY AREA UNDER PACKAGE
SCALE:20X

4219108/B 08/2019

NOTES: (continued)

6. Laser cutting apertures with trapezoidal walls and rounded corners may offer better paste release. IPC-7525 may have alternate design recommendations.

GENERIC PACKAGE VIEW

RHB 32

VQFN - 1 mm max height

5 x 5, 0.5 mm pitch

PLASTIC QUAD FLATPACK - NO LEAD

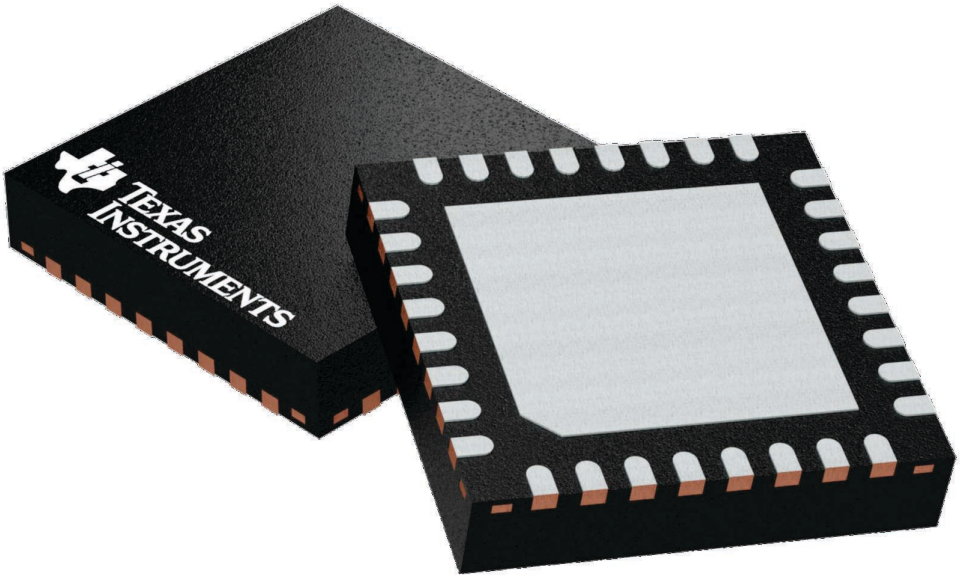

Images above are just a representation of the package family, actual package may vary.
Refer to the product data sheet for package details.

4224745/A

RHB0032E

PACKAGE OUTLINE

VQFN - 1 mm max height

PLASTIC QUAD FLATPACK - NO LEAD

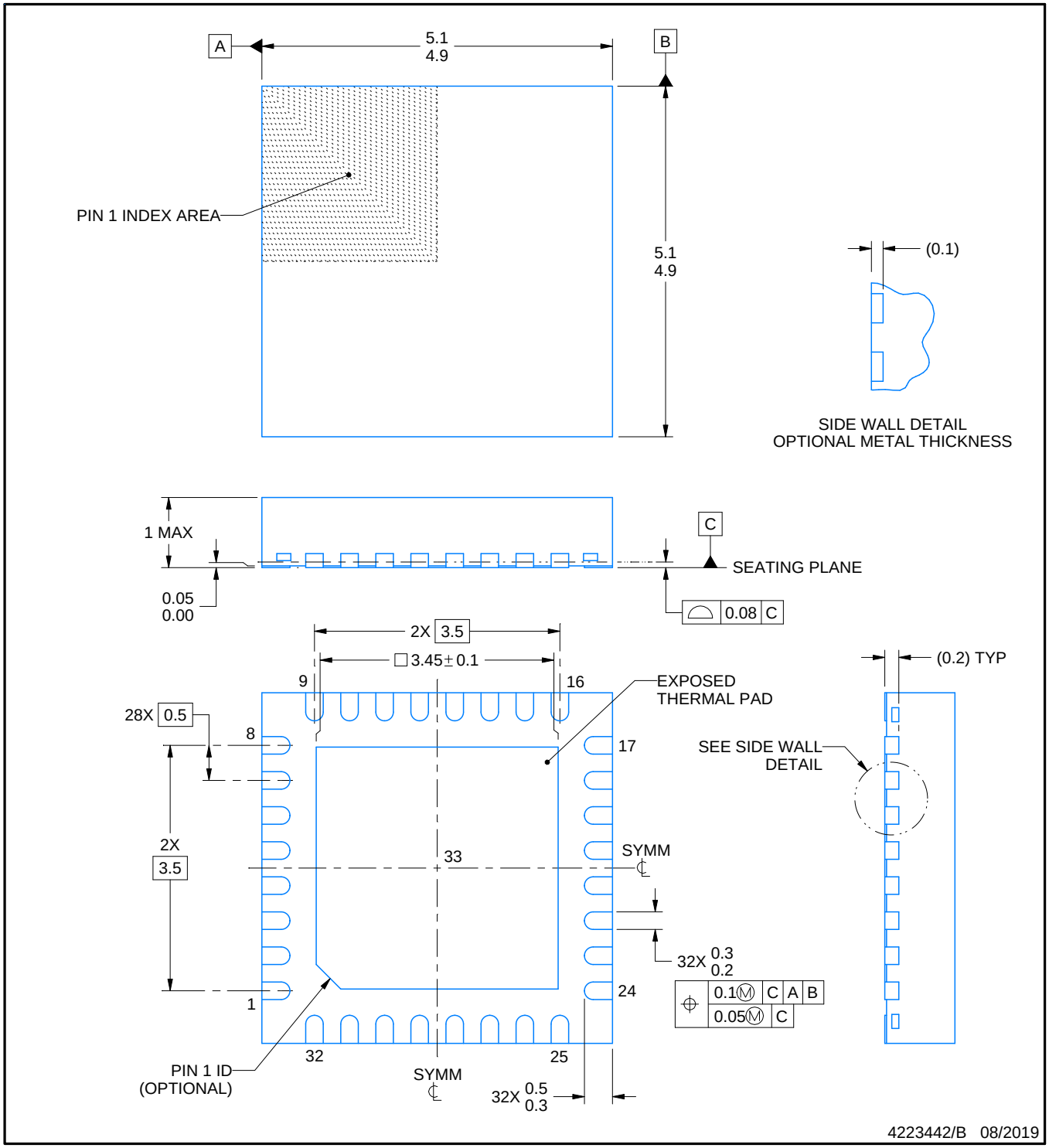

NOTES:

1. All linear dimensions are in millimeters. Any dimensions in parenthesis are for reference only. Dimensioning and tolerancing per ASME Y14.5M.
2. This drawing is subject to change without notice.
3. The package thermal pad must be soldered to the printed circuit board for thermal and mechanical performance.

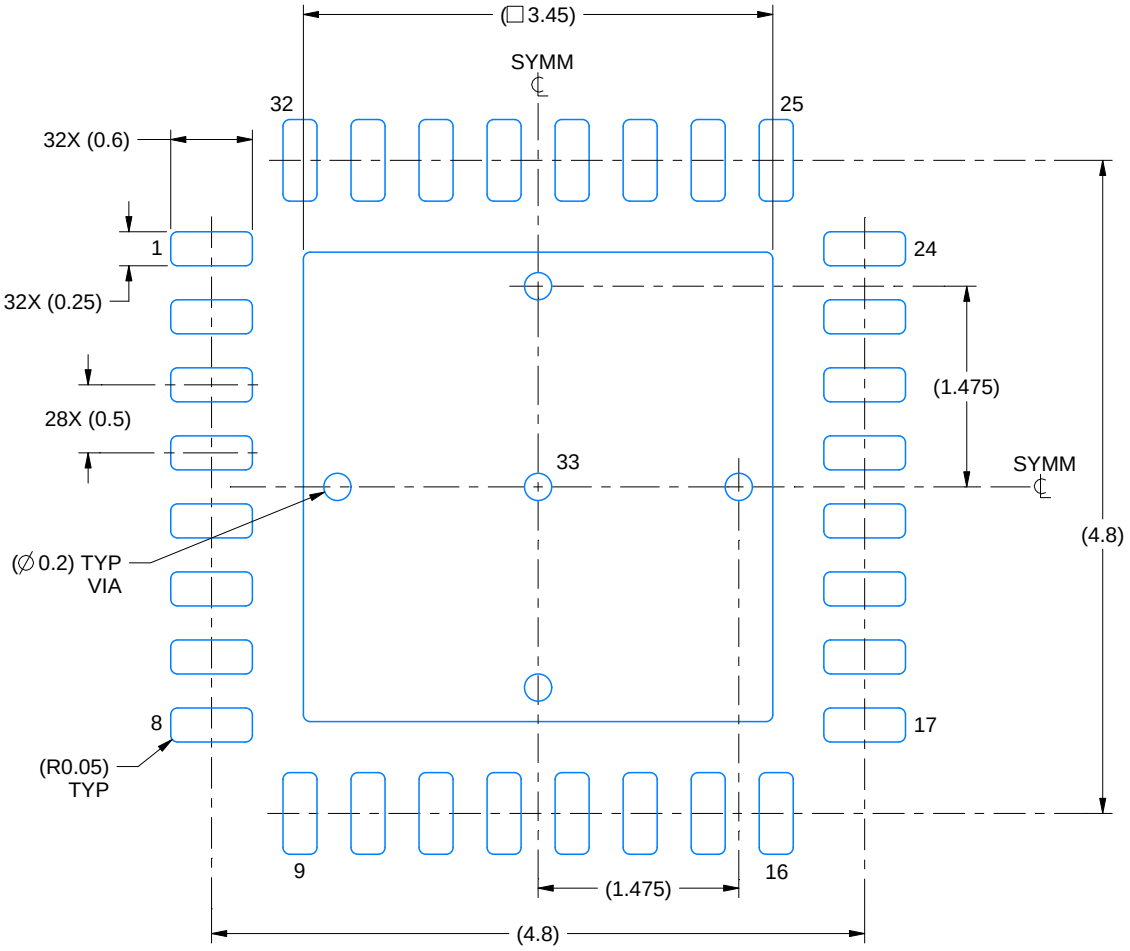

LAND PATTERN EXAMPLE
SCALE:18X

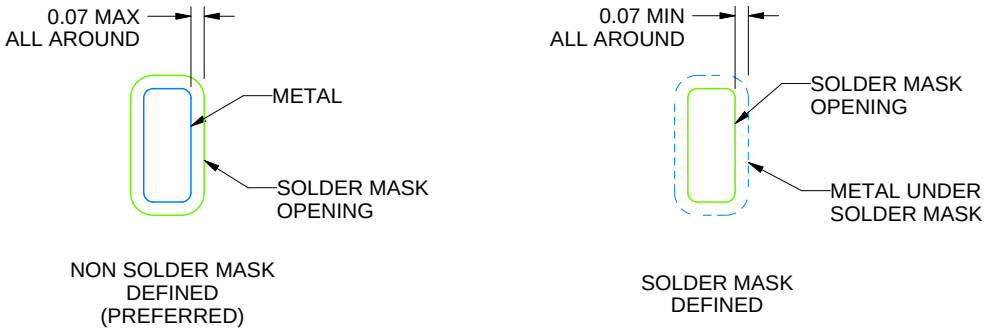

SOLDER MASK DETAILS

4223442/B 08/2019

NOTES: (continued)

4. This package is designed to be soldered to a thermal pad on the board. For more information, see Texas Instruments literature number SLUA271 (www.ti.com/lit/slua271).
5. Vias are optional depending on application, refer to device data sheet. If any vias are implemented, refer to their locations shown on this view. It is recommended that vias under paste be filled, plugged or tented.

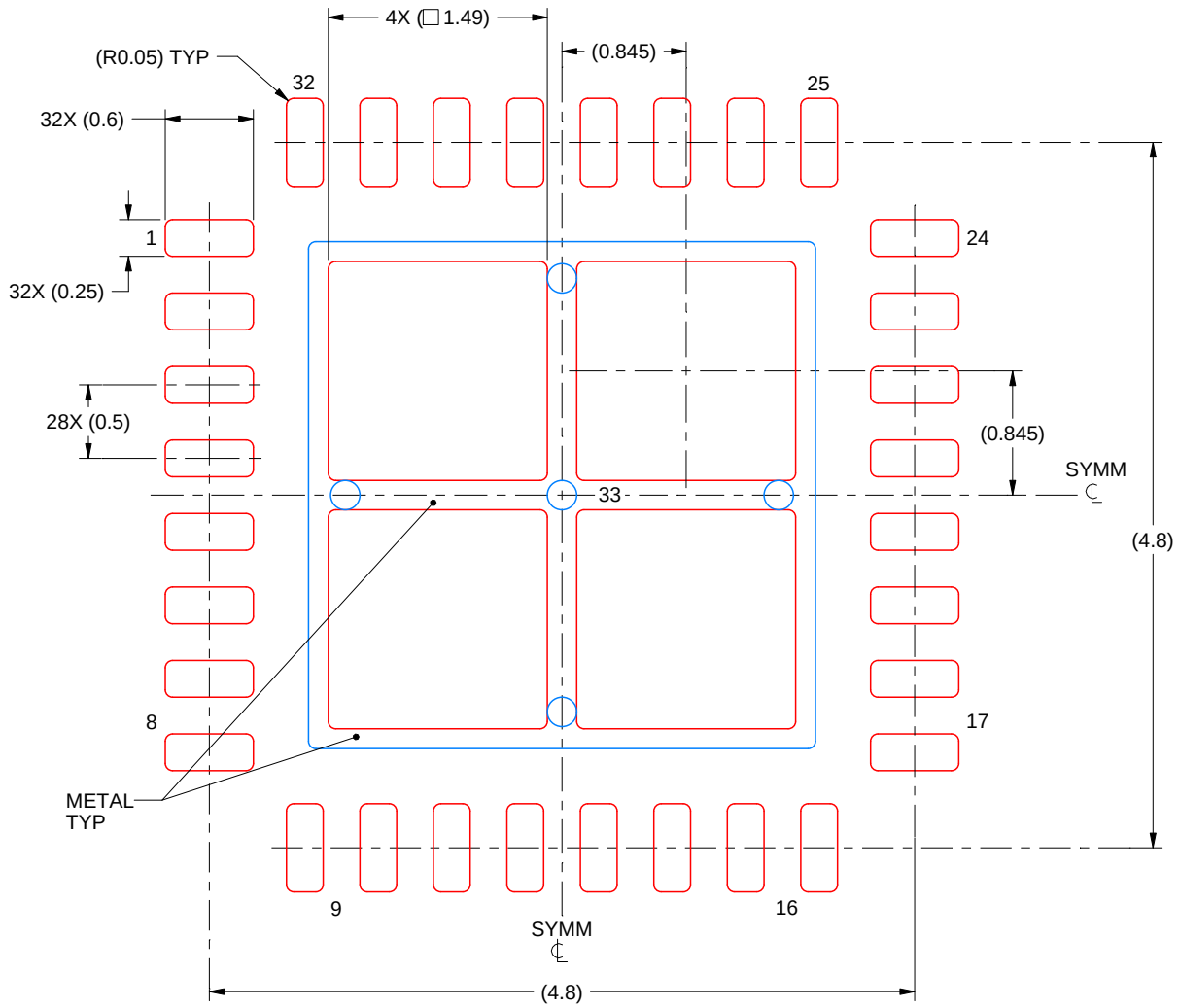

SOLDER PASTE EXAMPLE
BASED ON 0.125 mm THICK STENCIL

EXPOSED PAD 33:
75% PRINTED SOLDER COVERAGE BY AREA UNDER PACKAGE
SCALE:20X

4223442/B 08/2019

NOTES: (continued)

6. Laser cutting apertures with trapezoidal walls and rounded corners may offer better paste release. IPC-7525 may have alternate design recommendations.

IMPORTANT NOTICE AND DISCLAIMER

TI PROVIDES TECHNICAL AND RELIABILITY DATA (INCLUDING DATASHEETS), DESIGN RESOURCES (INCLUDING REFERENCE DESIGNS), APPLICATION OR OTHER DESIGN ADVICE, WEB TOOLS, SAFETY INFORMATION, AND OTHER RESOURCES “AS IS” AND WITH ALL FAULTS, AND DISCLAIMS ALL WARRANTIES, EXPRESS AND IMPLIED, INCLUDING WITHOUT LIMITATION ANY IMPLIED WARRANTIES OF MERCHANTABILITY, FITNESS FOR A PARTICULAR PURPOSE OR NON-INFRINGEMENT OF THIRD PARTY INTELLECTUAL PROPERTY RIGHTS.

These resources are intended for skilled developers designing with TI products. You are solely responsible for (1) selecting the appropriate TI products for your application, (2) designing, validating and testing your application, and (3) ensuring your application meets applicable standards, and any other safety, security, regulatory or other requirements.

These resources are subject to change without notice. TI grants you permission to use these resources only for development of an application that uses the TI products described in the resource. Other reproduction and display of these resources is prohibited. No license is granted to any other TI intellectual property right or to any third party intellectual property right. TI disclaims responsibility for, and you fully indemnify TI and its representatives against any claims, damages, costs, losses, and liabilities arising out of your use of these resources.

TI’s products are provided subject to TI’s Terms of Sale, TI’s General Quality Guidelines, or other applicable terms available either on ti.com or provided in conjunction with such TI products. TI’s provision of these resources does not expand or otherwise alter TI’s applicable warranties or warranty disclaimers for TI products. Unless TI explicitly designates a product as custom or customer-specified, TI products are standard, catalog, general purpose devices.

TI objects to and rejects any additional or different terms you may propose.

Copyright © 2026, Texas Instruments Incorporated

Last updated 10/2025