CDx4HC393, CDx4HCT393 High-Speed CMOS Logic Dual 4-Stage Binary Counter

1 Features

- Fully static operation
- Buffered inputs
- Common reset
- Negative-edge clocking
- Fanout (over temperature range):
  - Standard outputs 10 LSTTL loads
  - Bus driver outputs 15 LSTTL loads
- Wide operating temperature range: –55°C to 125°C
- Balanced propagation delay and transition times
- Significant power reduction compared to LSTTL Logic ICs
- HC types
  - 2 V to 6 V operation
  - High noise immunity: N_{IL} = 30%, N_{IH} = 30% of V_{CC} at V_{CC} = 5 V
- HCT types
  - 4.5 V to 5.5 V operation
  - Direct LSTTL input logic compatibility, V_{IL} = 0.8 V (max), V_{IH} = 2 V (min)
  - CMOS input compatibility, $I_I \leq 1$ µA at V_{OL}, V_{OH}

2 Description

The ’HC393 and ’HCT393 are 4-stage ripple-carry binary counters. All counter stages are primary-operative flip-flops. The state of the stage advances one count on the negative transition of each clock pulse; a high voltage level on the MR line resets all counters to their zero state. All inputs and outputs are buffered.

Device Information

PART NUMBER	PACKAGE[(1)]	BODY SIZE (NOM)
CD74HC393M	SOIC (14)	8.65 mm × 3.90 mm
CD74HC393E	PDIP (14)	19.31 mm × 6.35 mm
CD74HCT393M	SOIC (14)	8.65 mm × 3.90 mm
CD74HCT393E	PDIP (14)	19.31 mm × 6.35 mm
CD54HC393F3A	CDIP (14)	19.55 mm × 6.71 mm
CD54HCT393F	CDIP (14)	19.55 mm × 6.71 mm

(1) For all available packages, see the orderable addendum at the end of the datasheet.

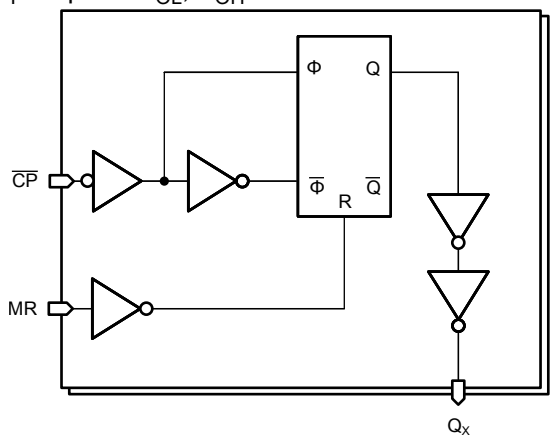

Functional Block Diagram

An IMPORTANT NOTICE at the end of this data sheet addresses availability, warranty, changes, use in safety-critical applications, intellectual property matters and other important disclaimers. PRODUCTION DATA.

Table of Contents

1 Features....1
2 Description....1
3 Revision History....2
4 Pin Configuration and Functions....3
5 Specifications....4
5.1 Absolute Maximum Ratings[1]....4
5.2 Recommended Operating Conditions....4
5.3 Thermal Information....4
5.4 Electrical Characteristics....5
5.5 Prerequisite for Switching Characteristics....6
5.6 Switching Characteristics....6
6 Parameter Measurement Information....8
7 Detailed Description....9
7.1 Overview....9
7.2 Functional Block Diagram....9
7.3 Device Functional Modes....9
8 Power Supply Recommendations....11
9 Layout....11
9.1 Layout Guidelines....11
10 Device and Documentation Support....12
10.1 Receiving Notification of Documentation Updates....12
10.2 Support Resources....12
10.3 Trademarks....12
10.4 Electrostatic Discharge Caution....12
10.5 Glossary....12
11 Mechanical, Packaging, and Orderable Information....12

3 Revision History

NOTE: Page numbers for previous revisions may differ from page numbers in the current version.

Changes from Revision E (August 2003) to Revision F (March 2022)	Page
• Updated the numbering, formatting, tables, figures, and cross-refrences throughout the document to reflect modern data sheet standards	1

Copyright © 2022 Texas Instruments Incorporated

4 Pin Configuration and Functions

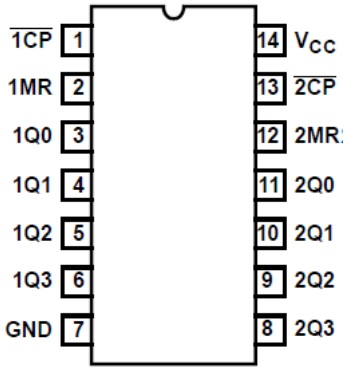

J, N, or D package
14-PIN CDIP, PDIP, or SOIC
Top View

5 Specifications

5.1 Absolute Maximum Ratings[1]

			MIN	MAX	UNIT
V_{CC}	Supply voltage		–0.5	7	V
I_{IK}	Input diode current	For V_I < –0.5 V or V_I > V_{CC} + 0.5 V		±20	mA
I_{OK}	Output diode current	For V_O < –0.5 V or V_O > V_{CC} + 0.5 V		±20	mA
I_O	Output source or sink current per output pin	For V_O> –0.5 V or V_O < V_{CC} + 0.5 V		±25	mA
	Continous current through V_{CC} or GND			±50	mA
T_J	Junction temperature			150	°C
T_{stg}	Storage temperature range		– 65	150	°C
	Lead temperature (Soldering 10s) (SOIC - lead tips only)			300	°C

(1) Stresses above those listed in “Absolute Maximum Ratings” may cause permanent damage to the device. This is a stress only rating and operation of the device at these or any other conditions above those indicated in the operational sections of this specification is not implied.

5.2 Recommended Operating Conditions

			MIN	MAX	UNIT
V_{CC}	Supply voltage range	HC types	2	6	V
		HCT types	4.5	5.5	
V_I, V_O	DC input or output voltage		0	V_{CC}	V
	Input rise and fall time	2 V		1000	ns
		4.5 V		500	
		6 V		400	
T_A	Temperature range		–55	125	℃

5.3 Thermal Information

THERMAL METRIC		D (SOIC) 14 PINS	N (PDIP) 14 PINS	UNIT
$R_{\theta JA}$	Junction-to-ambient thermal resistance[1]	86	80	°C/W

(1) For more information about traditional and new thermal metrics, see the Semiconductor and IC package thermal metrics application report.

Copyright © 2022 Texas Instruments Incorporated

5.4 Electrical Characteristics

PARAMETER		TEST CONDITIONS[2]	V_{CC} (V)	25°C			-40°C to 85°C		-55°C to 125°C		UNIT
				MIN	TYP	MAX	MIN	MAX	MIN	MAX	
HC TYPES											
V_{IH}	High level input voltage		2	1.5			1.5		1.5		V
			4.5	3.15			3.15		3.15		
			6	4.2			4.2		4.2		
V_{IL}	Low level input voltage		2			0.5		0.5		0.5	V
			4.5			1.35		1.35		1.35	
			6			1.8		1.8		1.8	
V_{OH}	High level output voltage CMOS loads	I_{OH} = – 20 µA	2	1.9			1.9		1.9		V
		I_{OH} = – 20 µA	4.5	4.4			4.4		4.4		
		I_{OH} = – 20 µA	6	5.9			5.9		5.9		
	High level output voltage TTL loads	I_{OH} – 4 mA	4.5	3.98			3.84		3.7		V
		I_{OH} – 5.2 mA	6	5.48			5.34		5.2		
V_{OL}	Low level output voltage CMOS loads	I_{OL} = 20 µA	2			0.1		0.1		0.1	V
		I_{OL} = 20 µA	4.5			0.1		0.1		0.1	
		I_{OL} = 20 µA	6			0.1		0.1		0.1	
	Low level output voltage TTL loads	I_{OL} = 4 mA	4.5			0.26		0.33		0.4	V
		I_{OL} = 5.2 mA	6			0.26		0.33		0.4	
I_I	Input leakage current	V_{CC} or GND	6			±0.1		±1		±1	µA
I_{CC}	Supply current	V_{CC} or GND	6			8		80		160	µA
HCT TYPES											
V_{IH}	High level input voltage		4.5 to 5.5	2			2		2		V
V_{IL}	Low level input voltage		4.5 to 5.5			0.8		0.8		0.8	V
V_{OH}	High level output voltage CMOS loads	I_{OH} = – 20 µA	4.5	4.4			4.4		4.4		V
	High level output voltage TTL loads	I_{OH} = – 4 mA	4.5	3.98			3.84		3.7		V
V_{OL}	Low level output voltage CMOS loads	I_{OL} = 20 µA	4.5			0.1		0.1		0.1	V
	Low level output voltage TTL loads	I_{OL} = 4 mA	4.5			0.26		0.33		0.4	V
I_I	Input leakage current	V_{CC} and GND	5.5			±0.1		±1		±1	µA
I_{CC}	Supply current	V_{CC} or GND	5.5			8		80		160	µA
ΔI_{CC} [1]	Additional supply current per input pin	$n\overline{CP}$ input held at V_{CC} -2.1	4.5 to 5.5		100	144		180		196	µA
		nMR input held at V_{CC} – 2.1	4.5 to 5.5		100	360		450		490	µA

(1) For dual-supply systems theoretical worst case (V_I = 2.4 V, V_{CC} = 5.5 V) specification is 1.8 mA.
(2) $V_I = V_{IH}$ or V_{IL}, unless otherwise noted.

Copyright © 2022 Texas Instruments Incorporated

5.5 Prerequisite for Switching Characteristics

PARAMETER		V_{CC} (V)	25°C			-40°C to 85°C		-55°C to 125°C		UNIT
			MIN	TYP	MAX	MIN	MAX	MIN	MAX	
HC TYPES										
f_{MAX}	Maximum clock frequency	2	6			5		4		MHz
		4.5	30			24		20		
		6	35			28		24		
t_W	Clock pulse width	2	80			100		120		ns
		4.5	16			20		24		
		6	14			17		20		
t_{REC}	Reset recovery time	2	5			5		5		ns
		4.5	5			5		5		
		6	5			5		5		
t_W	Reset pulse width	2	80			100		120		ns
		4.5	16			20		24		
		6	14			17		20		
HCT TYPES										
f_{MAX}	Maximum clock frequency	4.5	27			22		18		MHz
t_W	Clock pulse width	4.5	19			24		29		ns
t_{REC}	Reset recovery time	4.5	5			5		5		ns
t_W	Reset pulse width	4.5	16			20		24		ns

5.6 Switching Characteristics

Input t_r, t_f = 6 ns. See (Parameter Measurement Information)

PARAMETER		TEST CONDITIONS	V_{CC} (V)	25°C			-40°C to 85°C		-55°C to 125°C		UNIT
				MIN	TYP	MAX	MIN	MAX	MIN	MAX	
HC TYPES											
t_{PLH}, t_{PHL}	Propagation delay time $n\overline{CP}$ to nQ_0	C_L = 50 pF	2			150		190		225	ns
			4.5			30		38		59	
		C_L = 15 pF	5		12						ns
		C_L = 50 pF	6			26		33		50	ns
t_{PLH}, t_{PHL}	$n\overline{CP}$ to nQ_1	C_L = 50 pF	2			190		245		295	ns
			4.5			38		49		59	
			6			33		42		50	
t_{PLH}, t_{PHL}	$n\overline{CP}$ to nQ_2	C_L = 50 pF	2			240		300		360	ns
			4.5			48		60		72	
			6			41		51		61	
t_{PLH}, t_{PHL}	$n\overline{CP}$ to nQ_3	C_L = 50 pF	2			285		355		430	ns
			4.5			57		71		86	
			6			48		60		73	
t_{PLH}, t_{PHL}	MR to Q_n	C_L = 50 pF	2			135		170		205	ns
			4.5			27		34		41	
		C_L = 15 pF	5		11						ns
		C_L = 50 pF	6			23		29		35	

Copyright © 2022 Texas Instruments Incorporated

5.6 Switching Characteristics (continued)

Input t_r, t_f = 6 ns. See (Parameter Measurement Information)

PARAMETER		TEST CONDITIONS	V_{CC} (V)	25°C			-40°C to 85°C		-55°C to 125°C		UNIT
				MIN	TYP	MAX	MIN	MAX	MIN	MAX	
t_{TLH}, t_{THL}	Output transition time	C_L = 50 pF	2			75		95		110	ns
			4.5			15		19		22	
			6			13		16		19	
C_{IN}	Input capacitance	C_L = 50 pF				10		10		10	pF
C_{PD}	Power dissipation capacitance(1) (2)	C_L = 15 pF	5		20						pF
HCT TYPES											
t_{PLH}, t_{PHL}	Propagation delay time $n\overline{CP}$ to nQ_0	C_L = 50 pF	4.5			32		40		48	ns
		C_L = 15 pF	5		13						ns
t_{PLH}, t_{PHL}	$n\overline{CP}$ to nQ_1	C_L = 50 pF	4.5			44		55		66	ns
t_{PLH}, t_{PHL}	$n\overline{CP}$ to nQ_2	C_L = 50 pF	4.5			50		63		75	ns
t_{PLH}, t_{PHL}	n_{CP} to nQ_3	C_L = 50 pF	4.5			62		78		93	ns
t_{PLH}, t_{PHL}	MR to Q_n	C_L = 50 pF	4.5			32		40		48	ns
		C_L = 15 pF	5		13						ns
t_{TLH}, t_{THL}	Output transition	C_L = 50 pF	4.5			15		19		22	ns
C_{IN}	Input capacitance	C_L = 15 pF				10		10		10	pF
C_{PD}	Power dissipation capacitance(1) (2)	C_L = 15 pF	5		21						pF

(1) C_{PD} is used to determine the dynamic power consumption, per stage.
(2) $P_D = V_{CC}{}^2 f_i (C_{PD} + C_L)$ where f_i = input frequency, C_L = output load capacitance, V_{CC} = supply voltage.

6 Parameter Measurement Information

Phase relationships between waveforms were chosen arbitrarily. All input pulses are supplied by generators having the following characteristics: PRR ≤ 1 MHz, Z_O = 50 Ω, t_t < 6 ns.

For clock inputs, f_{max} is measured when the input duty cycle is 50%.

The outputs are measured one at a time with one input transition per measurement.

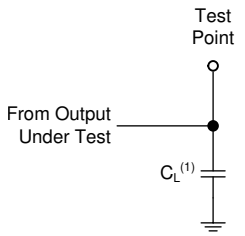

(1) C_L includes probe and test-fixture capacitance.

Figure 6-1. Load Circuit for Push-Pull Outputs

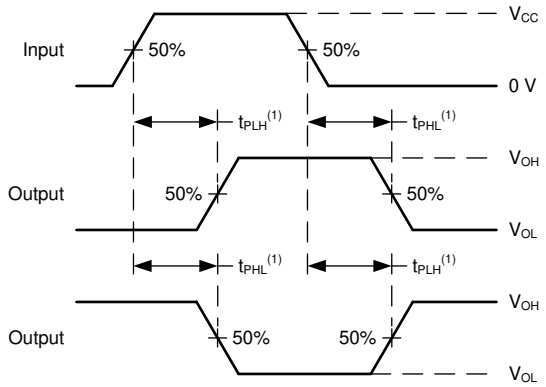

(1) The greater between t_{PLH} and t_{PHL} is the same as t_{pd}.

Figure 6-2. Voltage Waveforms, Propagation Delays for Standard CMOS Inputs

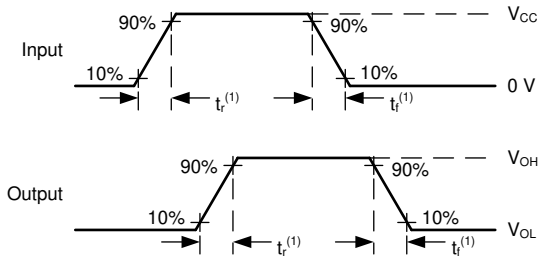

(1) The greater between t_r and t_f is the same as t_t.

Figure 6-3. Voltage Waveforms, Input and Output Transition Times for Standard CMOS Inputs

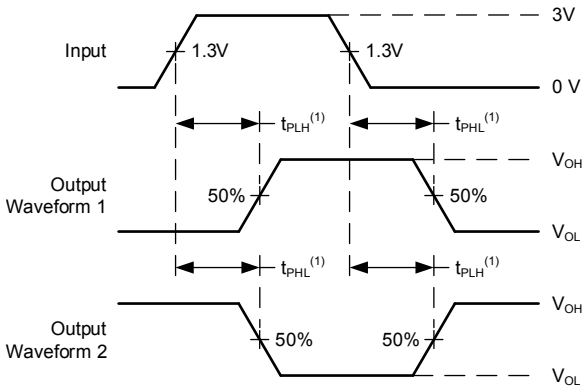

(1) The greater between t_{PLH} and t_{PHL} is the same as t_{pd}.

Figure 6-4. Voltage Waveforms, Propagation Delays for TTL-Compatible Inputs

Copyright © 2022 Texas Instruments Incorporated

7 Detailed Description

7.1 Overview

The ’HC393 and ’HCT393 are 4-stage ripple-carry binary counters. All counter stages are controller flip-flops. The state of the stage advances one count on the negative transition of each clock pulse; a high voltage level on the MR line resets all counters to their zero state. All inputs and outputs are buffered.

7.2 Functional Block Diagram

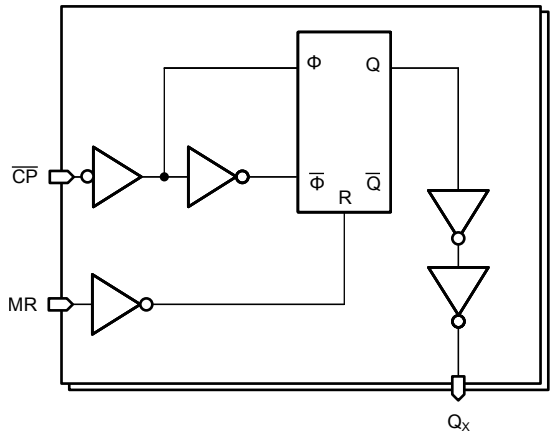

Figure 7-1. Functional Diagram

7.3 Device Functional Modes

Table 7-1. Truth Table(1)

CP COUNT	OUTPUTS			
	Q_0	Q_1	Q_2	Q_3
0	L	L	L	L
1	H	L	L	L
2	L	H	L	L
3	H	H	L	L
4	L	L	H	L
5	H	L	H	L
6	L	H	H	L
7	H	H	H	L
8	L	L	L	H
9	H	L	L	H
10	L	H	L	H
11	H	H	L	H
12	L	L	H	H
13	H	L	H	H
14	L	H	H	H
15	H	H	H	H

(1) H = high voltage level, L = low voltage level, X = don’t care, ↑ = transition from low to high level, ↓ = transition from high to low.

Table 7-2. Truth Table(1)

CP COUNT	MR	OUTPUT
↑	L	No change
↓	L	Count
X	H	L L L L

(1) H = high voltage level, L = low voltage level, X = don't care, ↑ = transition from low to high level, ↓ = transition from high to low.

Copyright © 2022 Texas Instruments Incorporated

8 Power Supply Recommendations

The power supply can be any voltage between the minimum and maximum supply voltage rating located in the *Recommended Operating Conditions*. Each V_{CC} terminal should have a good bypass capacitor to prevent power disturbance. A 0.1-µF capacitor is recommended for this device. It is acceptable to parallel multiple bypass caps to reject different frequencies of noise. The 0.1-µF and 1-µF capacitors are commonly used in parallel. The bypass capacitor should be installed as close to the power terminal as possible for best results.

9 Layout

9.1 Layout Guidelines

When using multiple-input and multiple-channel logic devices inputs must not ever be left floating. In many cases, functions or parts of functions of digital logic devices are unused; for example, when only two inputs of a triple-input AND gate are used or only 3 of the 4 buffer gates are used. Such unused input pins must not be left unconnected because the undefined voltages at the outside connections result in undefined operational states. All unused inputs of digital logic devices must be connected to a logic high or logic low voltage, as defined by the input voltage specifications, to prevent them from floating. The logic level that must be applied to any particular unused input depends on the function of the device. Generally, the inputs are tied to GND or V_{CC}, whichever makes more sense for the logic function or is more convenient.

Copyright © 2022 Texas Instruments Incorporated

10 Device and Documentation Support

TI offers an extensive line of development tools. Tools and software to evaluate the performance of the device, generate code, and develop solutions are listed below.

10.1 Receiving Notification of Documentation Updates

To receive notification of documentation updates, navigate to the device product folder on ti.com. Click on *Subscribe to updates* to register and receive a weekly digest of any product information that has changed. For change details, review the revision history included in any revised document.

10.2 Support Resources

TI E2E™ support forums are an engineer's go-to source for fast, verified answers and design help — straight from the experts. Search existing answers or ask your own question to get the quick design help you need.

Linked content is provided "AS IS" by the respective contributors. They do not constitute TI specifications and do not necessarily reflect TI's views; see TI's Terms of Use.

10.3 Trademarks

TI E2E™ is a trademark of Texas Instruments.
All trademarks are the property of their respective owners.

10.4 Electrostatic Discharge Caution

This integrated circuit can be damaged by ESD. Texas Instruments recommends that all integrated circuits be handled with appropriate precautions. Failure to observe proper handling and installation procedures can cause damage.

ESD damage can range from subtle performance degradation to complete device failure. Precision integrated circuits may be more susceptible to damage because very small parametric changes could cause the device not to meet its published specifications.

10.5 Glossary

TI Glossary	This glossary lists and explains terms, acronyms, and definitions.

11 Mechanical, Packaging, and Orderable Information

The following pages include mechanical, packaging, and orderable information. This information is the most current data available for the designated devices. This data is subject to change without notice and revision of this document. For browser-based versions of this data sheet, refer to the left-hand navigation.

Copyright © 2022 Texas Instruments Incorporated

PACKAGING INFORMATION

Orderable Device	Status (1)	Package Type	Package Drawing	Pins	Package Qty	Eco Plan (2)	Lead finish/ Ball material (6)	MSL Peak Temp (3)	Op Temp (°C)	Device Marking (4/5)	Samples
5962-8989001CA	ACTIVE	CDIP	J	14	25	Non-RoHS & Green	SNPB	N / A for Pkg Type	-55 to 125	5962-8989001CA CD54HCT393F3A	Samples
CD54HC393F3A	ACTIVE	CDIP	J	14	25	Non-RoHS & Green	SNPB	N / A for Pkg Type	-55 to 125	8410001CA CD54HC393F3A	Samples
CD54HCT393F	ACTIVE	CDIP	J	14	25	Non-RoHS & Green	SNPB	N / A for Pkg Type	-55 to 125	CD54HCT393F	Samples
CD54HCT393F3A	ACTIVE	CDIP	J	14	25	Non-RoHS & Green	SNPB	N / A for Pkg Type	-55 to 125	5962-8989001CA CD54HCT393F3A	Samples
CD74HC393E	ACTIVE	PDIP	N	14	25	RoHS & Green	NIPDAU	N / A for Pkg Type	-55 to 125	CD74HC393E	Samples
CD74HC393M	OBSOLETE	SOIC	D	14		TBD	Call TI	Call TI	-55 to 125	HC393M	
CD74HC393M96	ACTIVE	SOIC	D	14	2500	RoHS & Green	NIPDAU | SN	Level-1-260C-UNLIM	-55 to 125	HC393M	Samples
CD74HCT393E	ACTIVE	PDIP	N	14	25	RoHS & Green	NIPDAU	N / A for Pkg Type	-55 to 125	CD74HCT393E	Samples
CD74HCT393M96	ACTIVE	SOIC	D	14	2500	RoHS & Green	NIPDAU | SN	Level-1-260C-UNLIM	-55 to 125	HCT393M	Samples
CD74HCT393MT	OBSOLETE	SOIC	D	14		TBD	Call TI	Call TI	-55 to 125	HCT393M	

(1) The marketing status values are defined as follows:
ACTIVE: Product device recommended for new designs.
LIFEBUY: TI has announced that the device will be discontinued, and a lifetime-buy period is in effect.
NRND: Not recommended for new designs. Device is in production to support existing customers, but TI does not recommend using this part in a new design.
PREVIEW: Device has been announced but is not in production. Samples may or may not be available.
OBSOLETE: TI has discontinued the production of the device.

(2) **RoHS:** TI defines "RoHS" to mean semiconductor products that are compliant with the current EU RoHS requirements for all 10 RoHS substances, including the requirement that RoHS substance do not exceed 0.1% by weight in homogeneous materials. Where designed to be soldered at high temperatures, "RoHS" products are suitable for use in specified lead-free processes. TI may reference these types of products as "Pb-Free".
RoHS Exempt: TI defines "RoHS Exempt" to mean products that contain lead but are compliant with EU RoHS pursuant to a specific EU RoHS exemption.
Green: TI defines "Green" to mean the content of Chlorine (Cl) and Bromine (Br) based flame retardants meet JS709B low halogen requirements of <=1000ppm threshold. Antimony trioxide based flame retardants must also meet the <=1000ppm threshold requirement.

(3) MSL, Peak Temp. - The Moisture Sensitivity Level rating according to the JEDEC industry standard classifications, and peak solder temperature.

(4) There may be additional marking, which relates to the logo, the lot trace code information, or the environmental category on the device.

(5) Multiple Device Markings will be inside parentheses. Only one Device Marking contained in parentheses and separated by a "~" will appear on a device. If a line is indented then it is a continuation of the previous line and the two combined represent the entire Device Marking for that device.

(6) Lead finish/Ball material - Orderable Devices may have multiple material finish options. Finish options are separated by a vertical ruled line. Lead finish/Ball material values may wrap to two lines if the finish value exceeds the maximum column width.

Important Information and Disclaimer: The information provided on this page represents TI's knowledge and belief as of the date that it is provided. TI bases its knowledge and belief on information provided by third parties, and makes no representation or warranty as to the accuracy of such information. Efforts are underway to better integrate information from third parties. TI has taken and continues to take reasonable steps to provide representative and accurate information but may not have conducted destructive testing or chemical analysis on incoming materials and chemicals. TI and TI suppliers consider certain information to be proprietary, and thus CAS numbers and other limited information may not be available for release.

In no event shall TI's liability arising out of such information exceed the total purchase price of the TI part(s) at issue in this document sold by TI to Customer on an annual basis.

OTHER QUALIFIED VERSIONS OF CD54HC393, CD54HCT393, CD74HC393, CD74HCT393 :

- Catalog : CD74HC393, CD74HCT393
- Military : CD54HC393, CD54HCT393

NOTE: Qualified Version Definitions:

- Catalog - TI's standard catalog product
- Military - QML certified for Military and Defense Applications

TAPE AND REEL INFORMATION

REEL DIMENSIONS

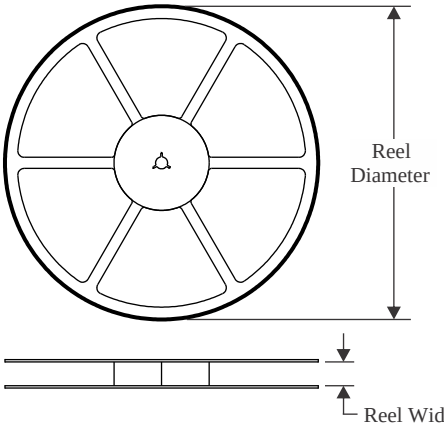

TAPE DIMENSIONS

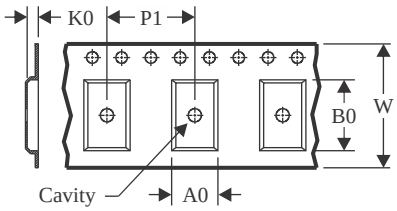

A0	Dimension designed to accommodate the component width
B0	Dimension designed to accommodate the component length
K0	Dimension designed to accommodate the component thickness
W	Overall width of the carrier tape
P1	Pitch between successive cavity centers

QUADRANT ASSIGNMENTS FOR PIN 1 ORIENTATION IN TAPE

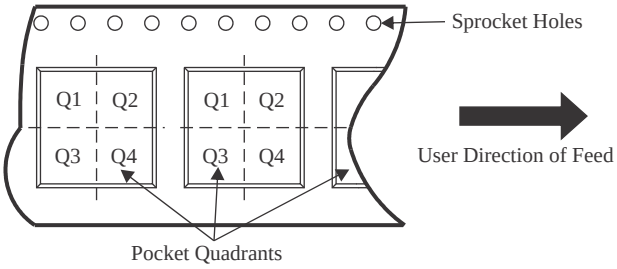

*All dimensions are nominal

Device	Package Type	Package Drawing	Pins	SPQ	Reel Diameter (mm)	Reel Width W1 (mm)	A0 (mm)	B0 (mm)	K0 (mm)	P1 (mm)	W (mm)	Pin1 Quadrant
CD74HC393M96	SOIC	D	14	2500	330.0	16.4	6.6	9.3	2.1	8.0	16.0	Q1
CD74HC393M96	SOIC	D	14	2500	330.0	16.4	6.5	9.0	2.1	8.0	16.0	Q1
CD74HC393M96	SOIC	D	14	2500	330.0	16.4	6.5	9.0	2.1	8.0	16.0	Q1
CD74HCT393M96	SOIC	D	14	2500	330.0	16.4	6.6	9.3	2.1	8.0	16.0	Q1
CD74HCT393M96	SOIC	D	14	2500	330.0	16.4	6.5	9.0	2.1	8.0	16.0	Q1
CD74HCT393M96	SOIC	D	14	2500	330.0	16.4	6.5	9.0	2.1	8.0	16.0	Q1

TAPE AND REEL BOX DIMENSIONS

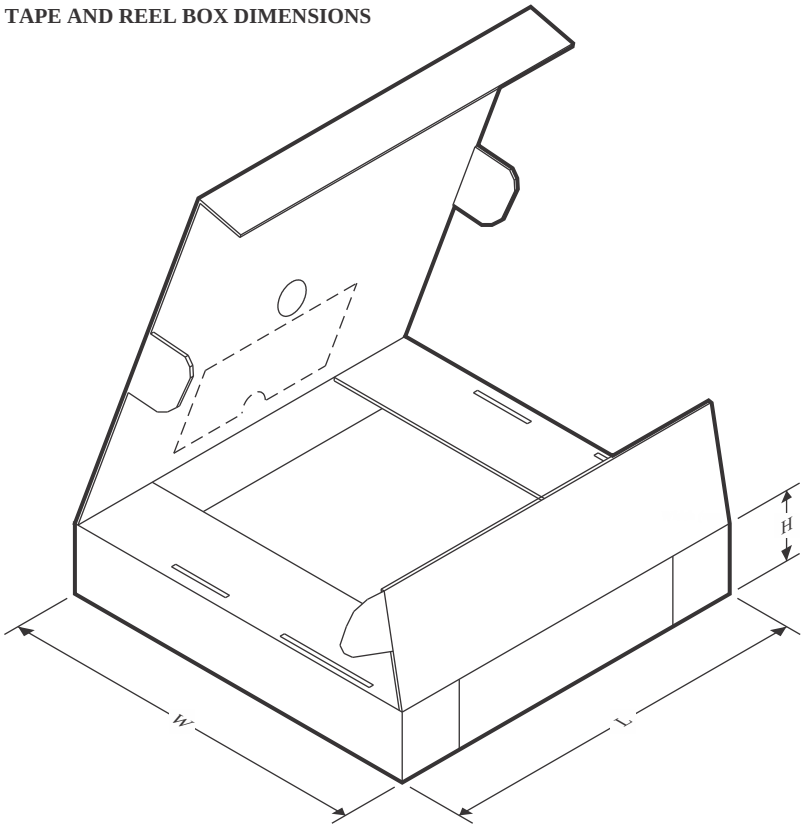

*All dimensions are nominal

Device	Package Type	Package Drawing	Pins	SPQ	Length (mm)	Width (mm)	Height (mm)
CD74HC393M96	SOIC	D	14	2500	366.0	364.0	50.0
CD74HC393M96	SOIC	D	14	2500	356.0	356.0	35.0
CD74HC393M96	SOIC	D	14	2500	356.0	356.0	35.0
CD74HCT393M96	SOIC	D	14	2500	366.0	364.0	50.0
CD74HCT393M96	SOIC	D	14	2500	356.0	356.0	35.0
CD74HCT393M96	SOIC	D	14	2500	356.0	356.0	35.0

TUBE

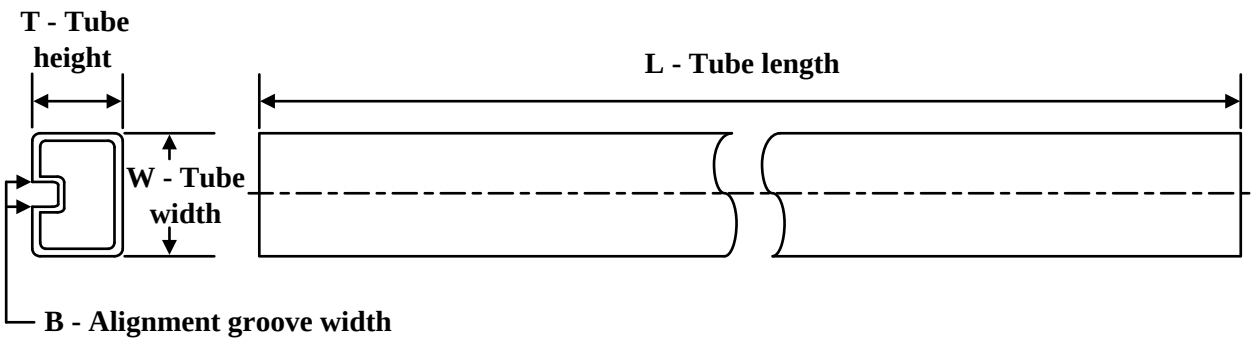

*All dimensions are nominal

Device	Package Name	Package Type	Pins	SPQ	L (mm)	W (mm)	T (µm)	B (mm)
CD74HC393E	N	PDIP	14	25	506	13.97	11230	4.32
CD74HC393E	N	PDIP	14	25	506	13.97	11230	4.32
CD74HCT393E	N	PDIP	14	25	506	13.97	11230	4.32
CD74HCT393E	N	PDIP	14	25	506	13.97	11230	4.32

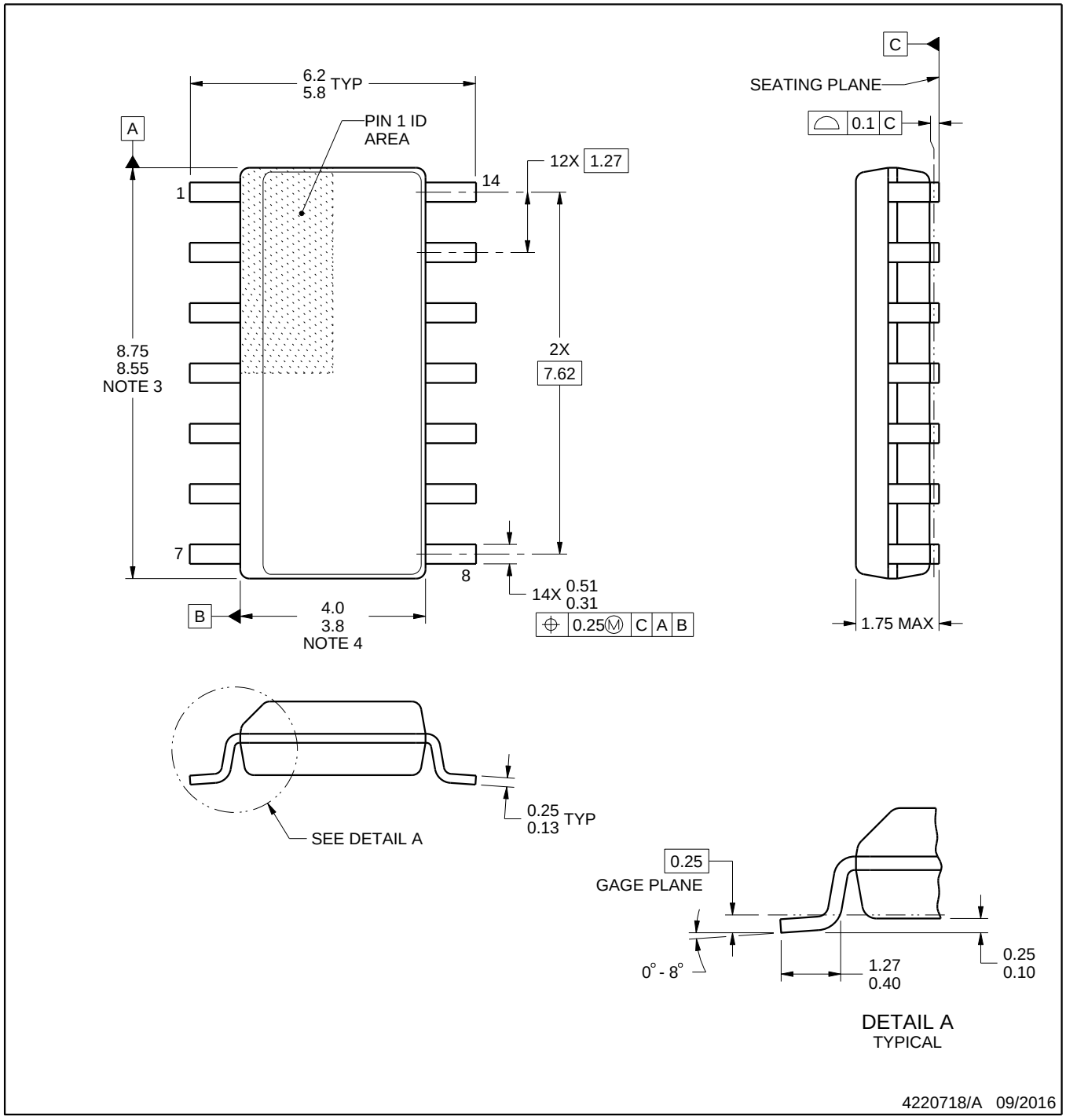

NOTES:

1. All linear dimensions are in millimeters. Dimensions in parenthesis are for reference only. Dimensioning and tolerancing per ASME Y14.5M.
2. This drawing is subject to change without notice.
3. This dimension does not include mold flash, protrusions, or gate burrs. Mold flash, protrusions, or gate burrs shall not exceed 0.15 mm, per side.
4. This dimension does not include interlead flash. Interlead flash shall not exceed 0.43 mm, per side.
5. Reference JEDEC registration MS-012, variation AB.

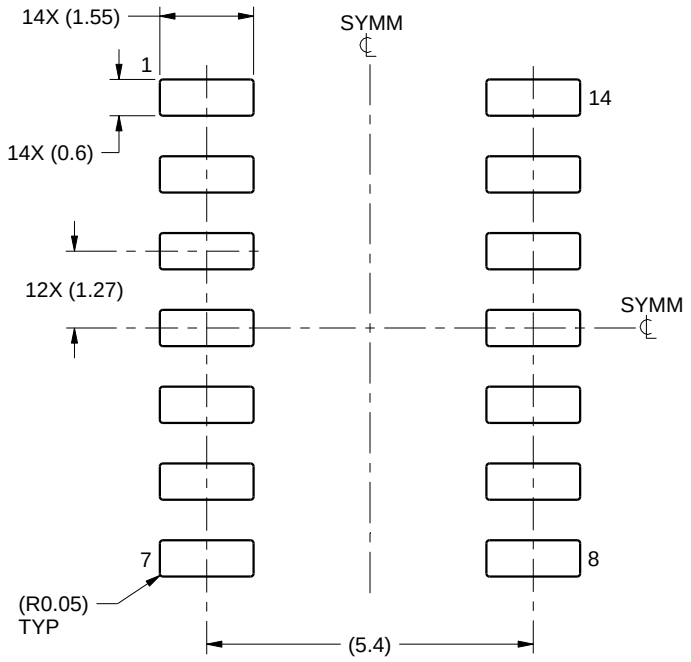

LAND PATTERN EXAMPLE
SCALE:8X

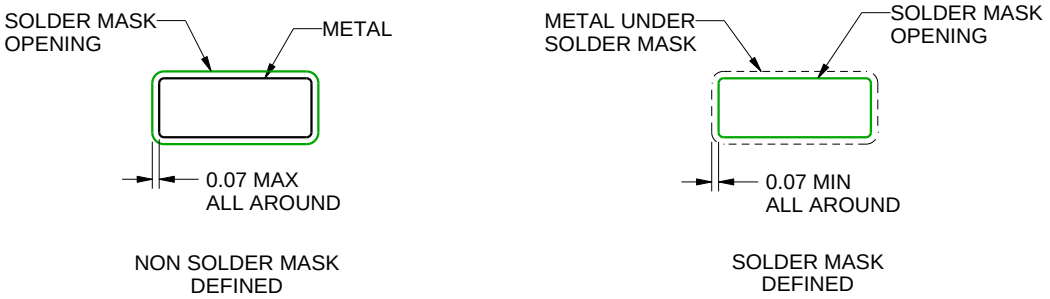

SOLDER MASK DETAILS

4220718/A 09/2016

NOTES: (continued)

6. Publication IPC-7351 may have alternate designs.
7. Solder mask tolerances between and around signal pads can vary based on board fabrication site.

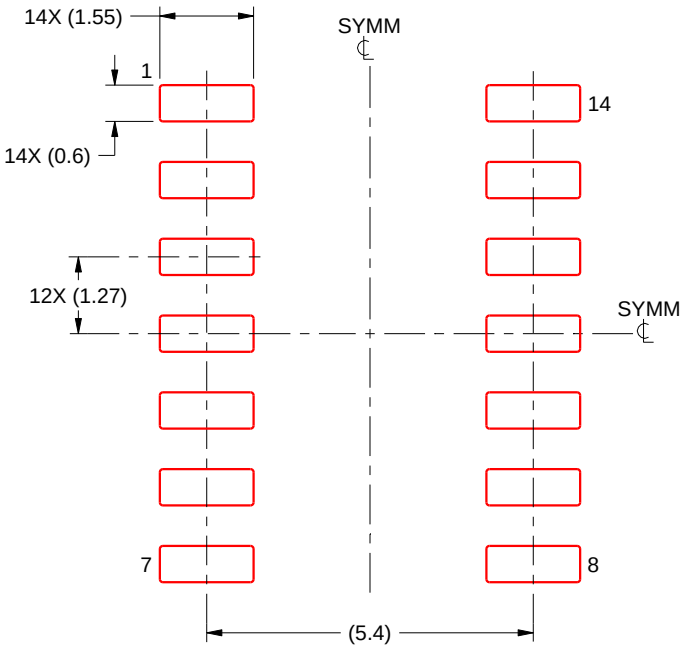

SOLDER PASTE EXAMPLE
BASED ON 0.125 mm THICK STENCIL
SCALE:8X

4220718/A 09/2016

NOTES: (continued)

8. Laser cutting apertures with trapezoidal walls and rounded corners may offer better paste release. IPC-7525 may have alternate design recommendations.
9. Board assembly site may have different recommendations for stencil design.

J 14 CDIP - 5.08 mm max height

CERAMIC DUAL IN LINE PACKAGE

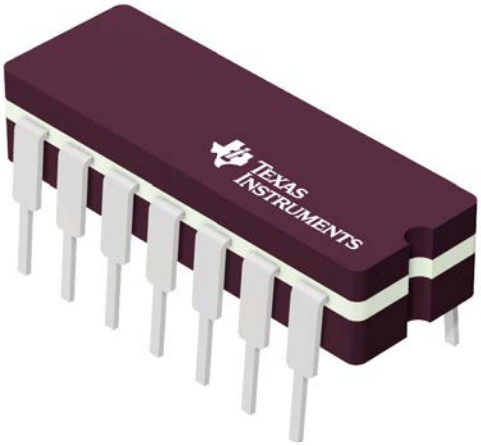

Images above are just a representation of the package family, actual package may vary.
Refer to the product data sheet for package details.

4040083-5/G

PACKAGE OUTLINE

J0014A

CDIP - 5.08 mm max height

CERAMIC DUAL IN LINE PACKAGE

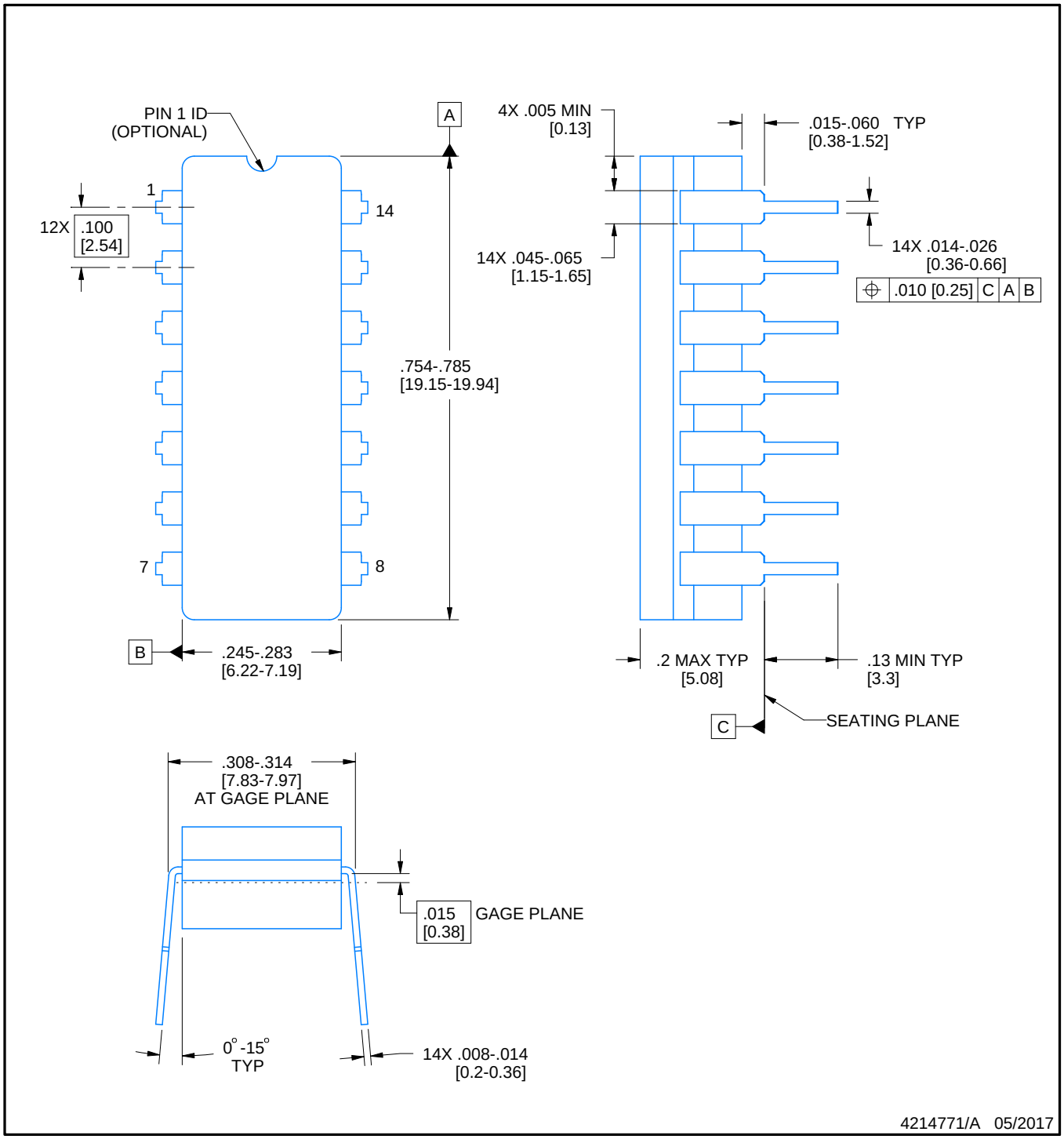

NOTES:

1. All controlling linear dimensions are in inches. Dimensions in brackets are in millimeters. Any dimension in brackets or parenthesis are for reference only. Dimensioning and tolerancing per ASME Y14.5M.
2. This drawing is subject to change without notice.
3. This package is hermitically sealed with a ceramic lid using glass frit.
4. Index point is provided on cap for terminal identification only and on press ceramic glass frit seal only.
5. Falls within MIL-STD-1835 and GDIP1-T14.

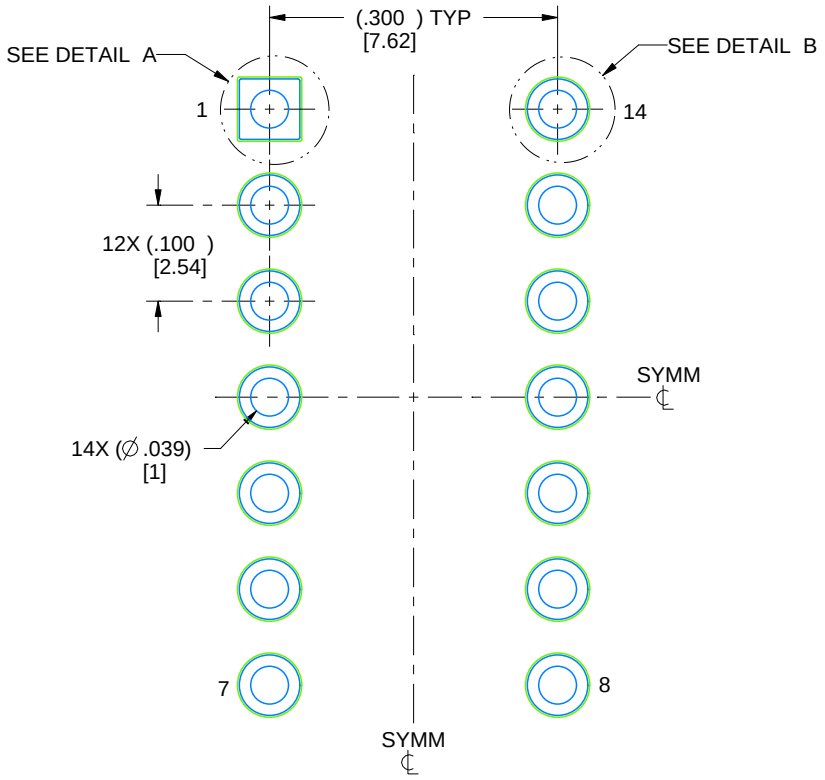

LAND PATTERN EXAMPLE
NON-SOLDER MASK DEFINED
SCALE: 5X

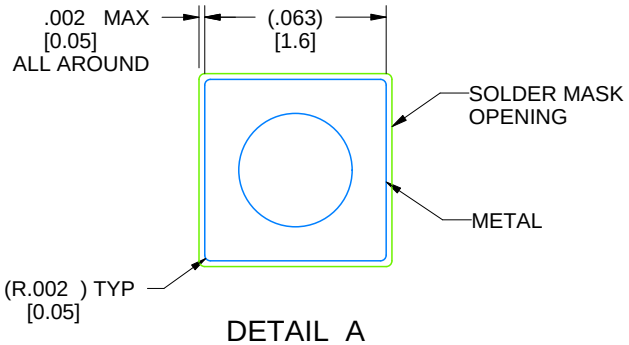

DETAIL A
SCALE: 15X

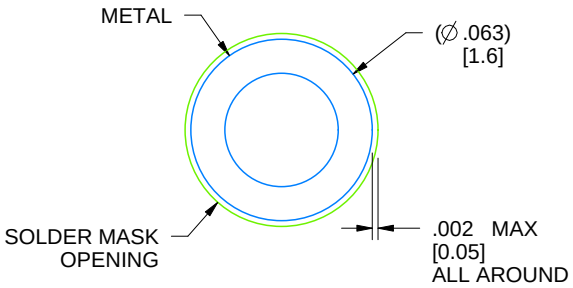

DETAIL B
13X, SCALE: 15X

4214771/A 05/2017

N (R–PDIP–T**) PLASTIC DUAL–IN–LINE PACKAGE

16 PINS SHOWN

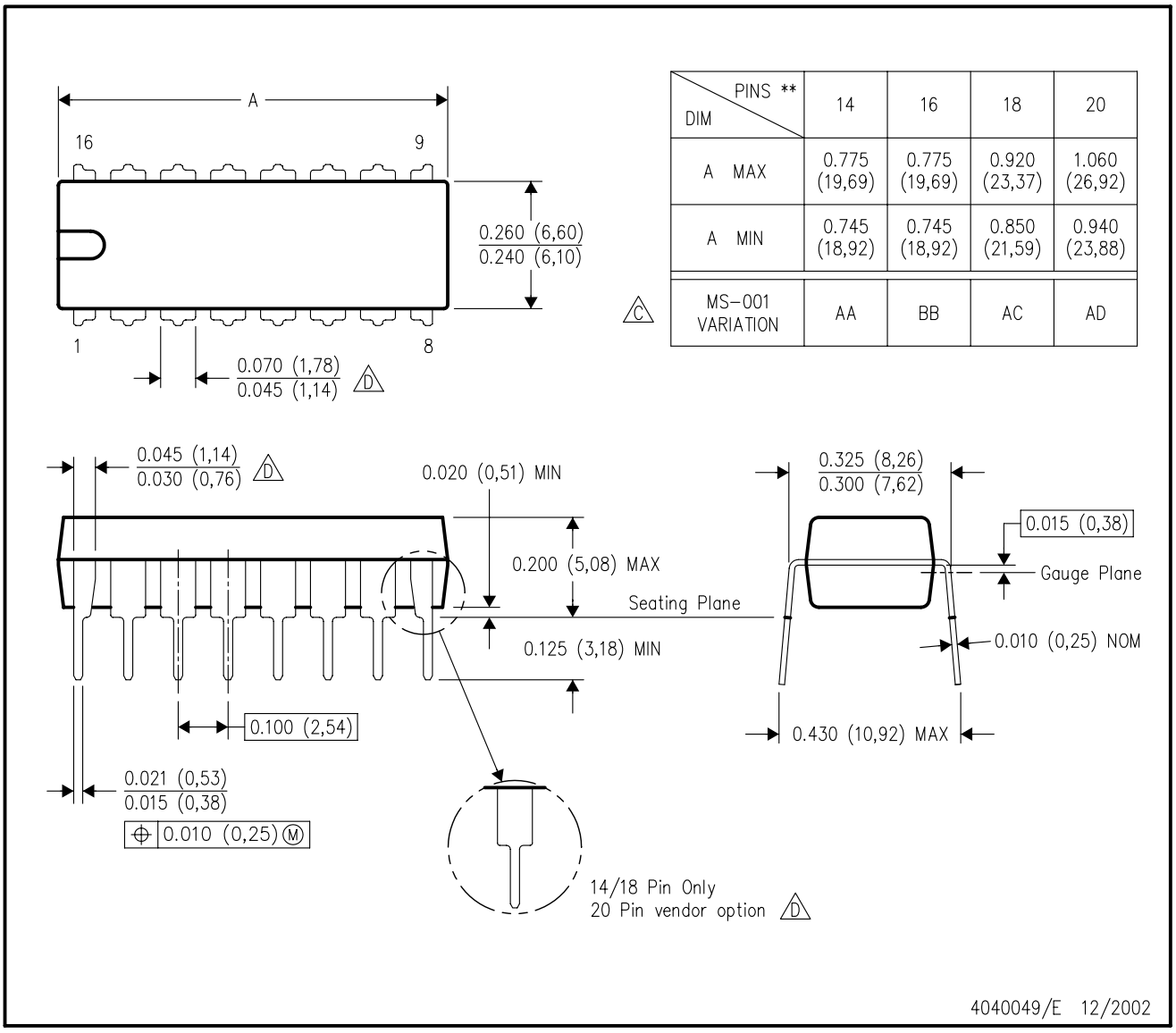

DIM \ PINS **	14	16	18	20
A MAX	0.775 (19,69)	0.775 (19,69)	0.920 (23,37)	1.060 (26,92)
A MIN	0.745 (18,92)	0.745 (18,92)	0.850 (21,59)	0.940 (23,88)
MS–001 VARIATION (C)	AA	BB	AC	AD

NOTES:
A. All linear dimensions are in inches (millimeters).
B. This drawing is subject to change without notice.
C. Falls within JEDEC MS–001, except 18 and 20 pin minimum body length (Dim A).
D. The 20 pin end lead shoulder width is a vendor option, either half or full width.

IMPORTANT NOTICE AND DISCLAIMER

TI PROVIDES TECHNICAL AND RELIABILITY DATA (INCLUDING DATA SHEETS), DESIGN RESOURCES (INCLUDING REFERENCE DESIGNS), APPLICATION OR OTHER DESIGN ADVICE, WEB TOOLS, SAFETY INFORMATION, AND OTHER RESOURCES “AS IS” AND WITH ALL FAULTS, AND DISCLAIMS ALL WARRANTIES, EXPRESS AND IMPLIED, INCLUDING WITHOUT LIMITATION ANY IMPLIED WARRANTIES OF MERCHANTABILITY, FITNESS FOR A PARTICULAR PURPOSE OR NON-INFRINGEMENT OF THIRD PARTY INTELLECTUAL PROPERTY RIGHTS.

These resources are intended for skilled developers designing with TI products. You are solely responsible for (1) selecting the appropriate TI products for your application, (2) designing, validating and testing your application, and (3) ensuring your application meets applicable standards, and any other safety, security, regulatory or other requirements.

These resources are subject to change without notice. TI grants you permission to use these resources only for development of an application that uses the TI products described in the resource. Other reproduction and display of these resources is prohibited. No license is granted to any other TI intellectual property right or to any third party intellectual property right. TI disclaims responsibility for, and you will fully indemnify TI and its representatives against, any claims, damages, costs, losses, and liabilities arising out of your use of these resources.

TI’s products are provided subject to TI’s Terms of Sale or other applicable terms available either on ti.com or provided in conjunction with such TI products. TI’s provision of these resources does not expand or otherwise alter TI’s applicable warranties or warranty disclaimers for TI products.

TI objects to and rejects any additional or different terms you may have proposed.

Mailing Address: Texas Instruments, Post Office Box 655303, Dallas, Texas 75265
Copyright © 2024, Texas Instruments Incorporated