LMH6574 4:1 High Speed Video Multiplexer

1 Features

- 500 MHz, 500 mV −3 dB Bandwidth, $A_V = 2$
- 400 MHz, 2 V_{PP} −3 dB Bandwidth, $A_V = 2$
- 8 ns Channel Switching Time
- 70 dB Channel to Channel Isolation at 10 MHz
- 0.02%, 0.05° Diff. Gain, Phase
- 0.1 dB Gain Flatness to 150 MHz
- 2200 V/µs Slew Rate
- Wide Supply Voltage Range: 6 V (±3 V) to 12 V (±6 V)
- −68 dB HD2 at 5 MHz
- −84 dB HD3 at 5 MHz

2 Applications

- Video Router
- Multi Input Video Monitor
- Instrumentation / Test Equipment
- Receiver IF Diversity Switch
- Multi Channel A/D Driver
- Picture in Picture Video Switch

3 Description

The LMH6574 is a high-performance analog multiplexer optimized for professional grade video and other high fidelity high bandwidth analog applications. The output amplifier selects any one of four buffered input signals based on the state of the two address bits. The LMH6574 provides a 400-MHz bandwidth at 2 V_{PP} output signal levels. Multimedia and high definition television (HDTV) applications can benefit from the LMH6574 0.1 dB bandwidth of 150 MHz and its 2200 V/µs slew rate.

The LMH6574 supports composite video applications with its 0.02% and 0.05° differential gain and phase errors for NTSC and PAL video signals while driving a single, back terminated 75-Ω load. An 80-mA linear output current is available for driving multiple video load applications.

The LMH6574 gain is set by external feedback and gain set resistors for maximum flexibility.

The LMH6574 is available in the 14-pin SOIC package.

Device Information(1)

PART NUMBER	PACKAGE	BODY SIZE (NOM)
LMH6574	SOIC (14)	8.65 mm × 3.91 mm

(1) For all available packages, see the orderable addendum at the end of the data sheet.

Frequency Response vs V_{OUT}

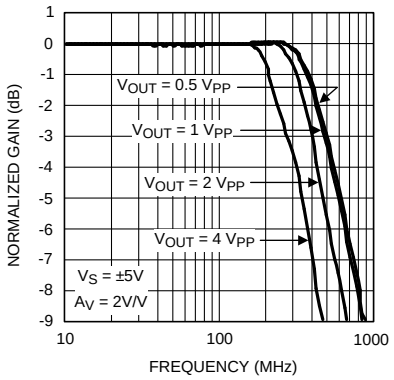

Frequency Response vs Gain

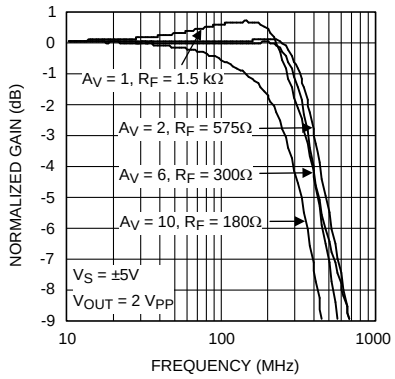

An IMPORTANT NOTICE at the end of this data sheet addresses availability, warranty, changes, use in safety-critical applications, intellectual property matters and other important disclaimers. PRODUCTION DATA.

Table of Contents

1 Features ... 1
2 Applications ... 1
3 Description ... 1
4 Revision History ... 2
5 Pin Configuration and Functions ... 3
6 Specifications ... 4
6.1 Absolute Maximum Ratings ... 4
6.2 ESD Ratings ... 4
6.3 Recommended Operating Conditions ... 4
6.4 Thermal Information ... 4
6.5 Electrical Characteristics ±5 V ... 5
6.6 Electrical Characteristics ±3.3 V ... 7
6.7 Typical Characteristics ... 8
7 Detailed Description ... 13
7.1 Functional Block Diagram ... 13
7.2 Feature Description ... 13
7.3 Device Functional Modes ... 16
8 Application and Implementation ... 17
8.1 Application Information ... 17
9 Power Supply Recommendations ... 21
9.1 Power Dissipation ... 21
10 Layout ... 21
10.1 Layout Guidelines ... 21
11 Device and Documentation Support ... 22
11.1 Documentation Support ... 22
11.2 Receiving Notification of Documentation Updates 22
11.3 Community Resources ... 22
11.4 Trademarks ... 22
11.5 Electrostatic Discharge Caution ... 22
11.6 Glossary ... 22
12 Mechanical, Packaging, and Orderable Information ... 22

4 Revision History

NOTE: Page numbers for previous revisions may differ from page numbers in the current version.

Changes from Revision D (December 2014) to Revision E — **Page**

- Changed IBN parameter maximum specifications from ±*5 µA* to ±*5.2 µA* and from ±*5.6 µA* to ±*5.8 µA* ... 5
- Changed PSRR parameter minimum specifications from *47 dB* to *43 dB* and from *45 dB* to *41 dB* ... 5
- Changed *Supply Current Disabled* parameter maximum specifications from *5.8 mA* to *6.2 mA* and from *5.9 mA* to *6.3 mA* ... 6
- Changed IiL parameter minimum specifications from *–2.9 µA* to *–3.3 µA* and from *–8.5 µA* to *–9 µA* ... 6
- Added *Feature Description* and *Device Functional Modes* sections ... 13

Changes from Revision C (November 2012) to Revision D — **Page**

- Added, updated, or revised the following sections: *Pin Configuration and Functions*, *Specifications*, *Application and Implementation*, *Power Supply Recommendations* , *Layout* , *Device and Documentation Support* , and *Mechanical, Packaging, and Orderable Information* ... 1
- Revised text in *Application and Implementation* section, formerly titled "Application Notes" ... 17
- Revised text in *Multiplexer Expansion* section. Added Figure 31, Figure 32, and Figure 33 ... 17

Copyright © 2004–2018, Texas Instruments Incorporated

5 Pin Configuration and Functions

14-Pin SOIC
Package D
(Top View)

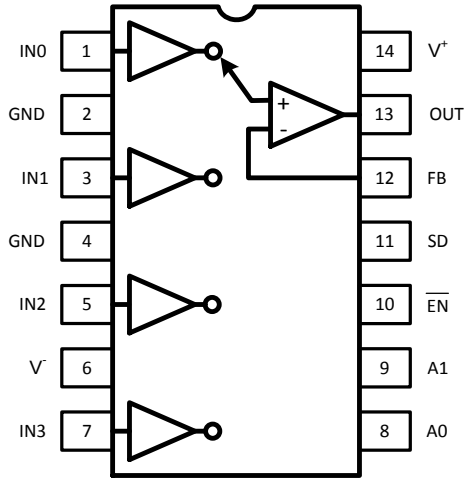

Pin Functions

PIN		I/O	DESCRIPTION
NO.	NAME		
1	IN0	I	Input Channel 0
2	GND	—	Ground
3	IN1	I	Input Channel 1
4	GND	—	Ground
5	IN2	I	Input Channel 2
6	V^-	I	V^- Supply
7	IN3	I	Input Channel 3
8	A0	I	Select Pin A0
9	A1	I	Select Pin A1
10	$\overline{EN}$	I	Enable
11	SD	I	Shutdown
12	FB	I	Feedback
13	OUT	O	Output
14	V^+	I	V^+ Supply

Truth Table

A1	A0	$\overline{EN}$	SD	OUT
1	1	0	0	CH 3
1	0	0	0	CH2
0	1	0	0	CH1
0	0	0	0	CH 0
X	X	1	0	Disable
X	X	X	1	Shutdown

Copyright © 2004–2018, Texas Instruments Incorporated

6 Specifications

6.1 Absolute Maximum Ratings[1][2]

	MIN	MAX	UNIT
Supply Voltage ($V^+ - V^-$)		13.2	V
I_{OUT}[3]		130	mA
Signal & Logic Input Pin Voltage		$\pm(V_S+0.6)$	V
Signal & Logic Input Pin Current		±20	mA
Maximum Junction Temperature		+150	°C
Storage Temperature	−65	+150	°C

(1) Absolute Maximum Ratings indicate limits beyond which damage to the device may occur. Operating Ratings indicate conditions for which the device is intended to be functional, but specific performance is not ensured. For ensured specifications, see the Electrical Characteristics ±5 V tables
(2) If Military/Aerospace specified devices are required, please contact the Texas Instruments Sales Office/ Distributors for availability and specifications.
(3) The maximum output current (I_{OUT}) is determined by the device power dissipation limitations (The junction temperature cannot be allowed to exceed 150°C). See the *Power Dissipation* for more details. A short circuit condition should be limited to 5 seconds or less.

6.2 ESD Ratings

		VALUE	UNIT
$V_{(ESD)}$ Electrostatic discharge[1]	Human-body model (HBM), per ANSI/ESDA/JEDEC JS-001[2]	±2000	V
	Machine model (MM)	±200	

(1) Human Body model, 1.5 kΩ in series with 100 pF. Machine model, 0 Ω In series with 200 pF.
(2) JEDEC document JEP155 states that 500-V HBM allows safe manufacturing with a standard ESD control process. Manufacturing with less than 2000-V HBM is possible with the necessary precautions. Pins listed as ±200 V may actually have higher performance.

6.3 Recommended Operating Conditions

over operating free-air temperature range (unless otherwise noted)[1]

	MIN	NOM	MAX	UNIT
Operating Temperature	−40		85	°C
Supply Voltage	6		12	V

(1) Absolute Maximum Ratings indicate limits beyond which damage to the device may occur. Operating Ratings indicate conditions for which the device is intended to be functional, but specific performance is not ensured. For ensured specifications, see the Electrical Characteristics ±5 V tables

6.4 Thermal Information

THERMAL METRIC[1]		D	UNIT
		14 PINS	
$R_{\theta JA}$	Junction-to-ambient thermal resistance	130	°C/W
$R_{\theta JC(top)}$	Junction-to-case (top) thermal resistance	40	°C/W

(1) For more information about traditional and new thermal metrics, see the *Semiconductor and IC Package Thermal Metrics* application report.

Copyright © 2004–2018, Texas Instruments Incorporated

6.5 Electrical Characteristics ±5 V

V_S = ±5 V, R_L = 100 Ω, A_V = 2 V/V, R_F = 575 Ω, T_J = 25 °C, unless otherwise specified.

PARAMETER		TEST CONDITIONS(1)		MIN	TYP	MAX	UNIT
FREQUENCY DOMAIN PERFORMANCE							
SSBW	−3 dB Bandwidth	V_{OUT} = 0.5 V_{PP}			500		MHz
LSBW	–3 dB Bandwidth	V_{OUT} = 2 V_{PP}			400		MHz
.1 dBBW	0. 1 dB Bandwidth	V_{OUT} = 0.25 V_{PP}			150		MHz
DG	Differential Gain	R_L = 150 Ω, f = 4.43 MHz			0.02%		
DP	Differential Phase	R_L = 150 Ω, f = 4.43 MHz			0.05		deg
XTLK	Channel to Channel Crosstalk	All Hostile, 5 MHz			−85		dB
TIME DOMAIN RESPONSE							
TRS	Channel to Channel Switching Time	Logic Transition to 90% Output			8		ns
	Enable and Disable Times	Logic Transition to 90% or 10% Output			10		ns
TRL	Rise and Fall Time	4-V Step			2.4		ns
TSS	Settling Time to 0.05%	2-V Step			17		ns
OS	Overshoot	2-V Step			5%		
SR	Slew Rate	4-V Step			2200		V/µs
DISTORTION							
HD2	2nd Harmonic Distortion	2 V_{PP} , 5 MHz			−68		dBc
HD3	3rd Harmonic Distortion	2 V_{PP} , 5 MHz			−84		dBc
IMD	3rd Order Intermodulation Products	10 MHz, Two Tones 2 V_{PP} at Output			−80		dBc
EQUIVALENT INPUT NOISE							
VN	Voltage	>1 MHz, Input Referred			5		nV/√Hz
ICN	Current	>1 MHz, Input Referred			5		pA/√Hz
STATIC, DC PERFORMANCE							
CHGM	Channel to Channel Gain Difference	DC, Difference in Gain Between Channels			±0.005%	±0.032%	
			-40°C ≤ T_J ≤ 85°C			±0.035%	
VIO	Input Offset Voltage(2)	V_{IN} = 0 V			1	±20	mV
			-40°C ≤ T_J ≤ 85°C			±25	
DVIO	Offset Voltage Drift				30		µV/°C
IBN	Input Bias Current(2)(3)	V_{IN} = 0 V			−3	±5.2	µA
			-40°C ≤ T_J ≤ 85°C			±5.8	
DIBN	Bias Current Drift				11		nA/°C
	Inverting Input Bias Current	Pin 12, Feedback Point, V_{IN} = 0 V			−7	±10	
			-40°C ≤ T_J ≤ 85°C			±13	
PSRR	Power Supply Rejection Ratio(2)	DC, Input Referred		43	54		dB
			-40°C ≤ T_J ≤ 85°C	41			

(1) Electrical Table values apply only for factory testing conditions at the temperature indicated. Factory testing conditions result in very limited self-heating of the device such that T_J = T_A. No ensure of parametric performance is indicated in the electrical tables under conditions of internal self heating where T_J > T_A. See *Application and Implementation* for information on temperature de-rating of this device. Min/Max ratings are based on product testing, characterization and simulation. Individual parameters are tested as noted.
(2) Parameters guaranteed by electrical testing at 25°C.
(3) Positive Value is current into device.

Copyright © 2004–2018, Texas Instruments Incorporated

Electrical Characteristics ±5 V (continued)

V_S = ±5 V, R_L = 100 Ω, A_V = 2 V/V, R_F = 575 Ω, T_J = 25 °C, unless otherwise specified.

PARAMETER		TEST CONDITIONS(1)		MIN	TYP	MAX	UNIT
ICC	Supply Current(2)	No Load			13	16	mA
			-40°C ≤ T_J ≤ 85°C			18	
	Supply Current Disabled(2)	$\overline{\text{ENABLE}}$ > 2 V			4.7	6.2	mA
			-40°C ≤ T_J ≤ 85°C			6.3	
	Supply Current Shutdown	SHUTDOWN > 2 V			1.8	2.5	mA
			-40°C ≤ T_J ≤ 85°C			2.6	
VIH	Logic High Threshold(2)	Select & Enable Pins (SD & $\overline{\text{EN}}$)		2.0			V
VIL	Logic Low Threshold(2)	Select & Enable Pins (SD & $\overline{\text{EN}}$)				0.8	V
IiL	Logic Pin Input Current Low(3)	Logic Input = 0 V Select & Enable Pins (SD & $\overline{\text{EN}}$)		−3.3	−1		µA
			-40°C ≤ T_J ≤ 85°C	–9			
IiH	Logic Pin Input Current High(3)	Logic Input = 2.0 V, Select & Enable Pins (SD & $\overline{\text{EN}}$)			47	68	µA
			-40°C ≤ T_J ≤ 85°C			72.5	
MISCELLANEOUS PERFORMANCE							
RIN+	Input Resistance				5		kΩ
CIN	Input Capacitance				0.8		pF
ROUT	Output Resistance	Output Active, ($\overline{\text{EN}}$ and SD < 0.8 V)			0.04		Ω
ROUT	Output Resistance	Output Disabled, ($\overline{\text{EN}}$ or SD > 2 V)			3000		Ω
COUT	Output Capacitance	Output Disabled, ($\overline{\text{EN}}$ or SD > 2 V)			3.1		pF
VO	Output Voltage Range	No Load		±3.54	±3.7		V
			-40°C ≤ T_J ≤ 85°C	±3.53			
VOL		R_L = 100 Ω		±3.18	±3.5		V
			-40°C ≤ T_J ≤ 85°C	±3.17			
CMIR	Input Voltage Range			±2.5	±2.6		V
IO	Linear Output Current(2)(3)	V_{IN} = 0 V		+60	±80		mA
				-70			
			-40°C ≤ T_J ≤ 85°C	+50			
			-40°C ≤ T_J ≤ 85°C	−60			
ISC	Short Circuit Current(4)	V_{IN} = ±2 V, Output Shorted to Ground			±230		mA

(4) The maximum output current (I_{OUT}) is determined by the device power dissipation limitations (The junction temperature cannot be allowed to exceed 150°C). See the *Power Dissipation* for more details. A short circuit condition should be limited to 5 seconds or less.

Copyright © 2004–2018, Texas Instruments Incorporated

6.6 Electrical Characteristics ±3.3 V

V_S = ±3.3 V, R_L = 100 Ω, A_V = 2 V/V, R_F = 575 Ω; unless otherwise specified.

PARAMETER		TEST CONDITIONS(1)	MIN	TYP	MAX	UNIT
FREQUENCY DOMAIN PERFORMANCE						
SSBW	−3 dB Bandwidth	V_{OUT} = 0.5 V_{PP}		475		MHz
LSBW	−3 dB Bandwidth	V_{OUT} = 2.0 V_{PP}		375		MHz
0.1 dBBW	0.1 dB Bandwidth	V_{OUT} = 0.5 V_{PP}		100		MHz
GFP	Peaking	DC to 200 MHz		0.4		dB
XTLK	Channel to Channel Crosstalk	All Hostile, f = 5 MHz		−85		dBc
TIME DOMAIN RESPONSE						
TRL	Rise and Fall Time	2-V Step		2		ns
TSS	Settling Time to 0.05%	2-V Step		20		ns
OS	Overshoot	2-V Step		5%		
SR	Slew Rate	2-V Step		1400		V/µs
DISTORTION						
HD2	2nd Harmonic Distortion	2 V_{PP}, 10 MHz		−67		dBc
HD3	3rd Harmonic Distortion	2 V_{PP}, 10 MHz		−87		dBc
STATIC, DC PERFORMANCE						
VIO	Input Offset Voltage	V_{IN} = 0 V		-5		mV
IBN	Input Bias Current(2)	V_{IN} = 0 V		-3		µA
PSRR	Power Supply Rejection Ratio	DC, Input Referred		49		dB
ICC	Supply Current	No Load		12		mA
VIH	Logic High Threshold	Select & Enable Pins (SD & $\overline{EN}$)	1.3			V
VIL	Logic Low Threshold	Select & Enable Pins (SD & $\overline{EN}$)			0.4	V
MISCELLANEOUS PERFORMANCE						
RIN+	Input Resistance			5		kΩ
CIN	Input Capacitance			0.8		pF
ROUT	Output Resistance			0.06		Ω
VO	Output Voltage Range	No Load		±2		V
VOL		R_L = 100 Ω		±1.8		V
CMIR	Input Voltage Range			±1.2		V
IO	Linear Output Current	V_{IN} = 0 V		±60		mA
ISC	Short Circuit Current	V_{IN} = ±1 V, Output Shorted to Ground		±150		mA

(1) Electrical Table values apply only for factory testing conditions at the temperature indicated. Factory testing conditions result in very limited self-heating of the device such that $T_J = T_A$. No ensure of parametric performance is indicated in the electrical tables under conditions of internal self heating where $T_J > T_A$. See *Application and Implementation* for information on temperature de-rating of this device. Min/Max ratings are based on product testing, characterization and simulation. Individual parameters are tested as noted.
(2) Positive Value is current into device.

6.7 Typical Characteristics

V_S = ±5 V, R_L = 100 Ω, A_V = 2, R_F = R_G = 575 Ω, unless otherwise specified.

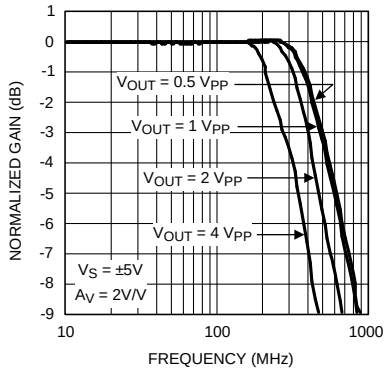

Figure 1. Frequency Response vs V_{OUT}

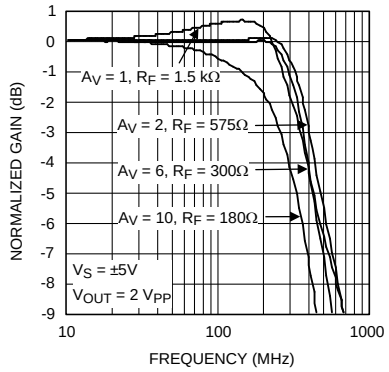

Figure 2. Frequency Response vs Gain

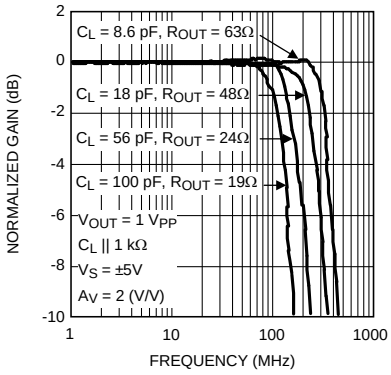

Figure 3. Frequency Response vs Capacitive Load

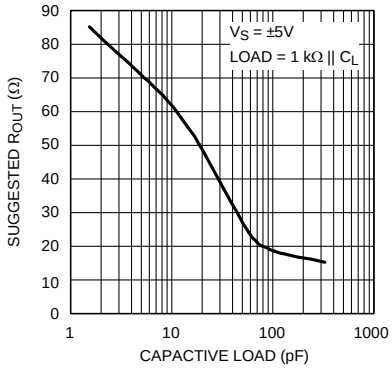

Figure 4. Suggested R_{OUT} vs Capacitive Load

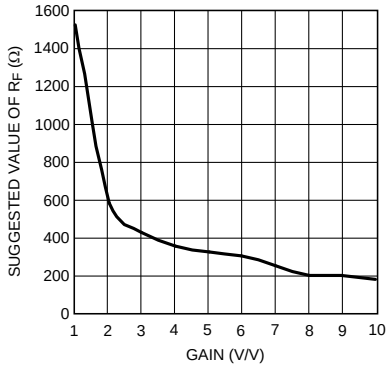

Figure 5. Suggested Value of R_F vs Gain

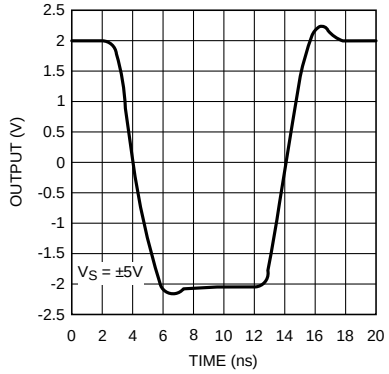

Figure 6. Pulse Response $4V_{PP}$

Copyright © 2004–2018, Texas Instruments Incorporated

Typical Characteristics (continued)

V_S = ±5 V, R_L = 100 Ω, A_V = 2, R_F = R_G = 575 Ω, unless otherwise specified.

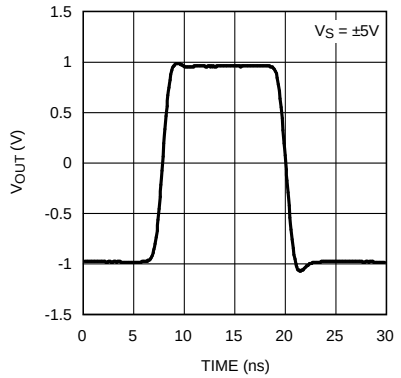

Figure 7. Pulse Response $2V_{PP}$

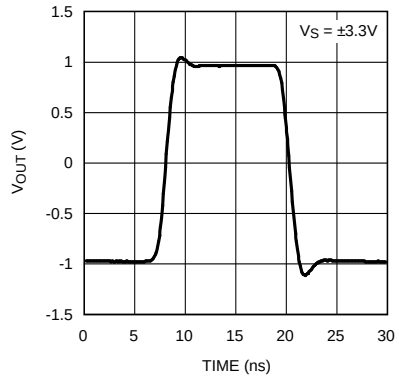

Figure 8. Pulse Response $2V_{PP}$

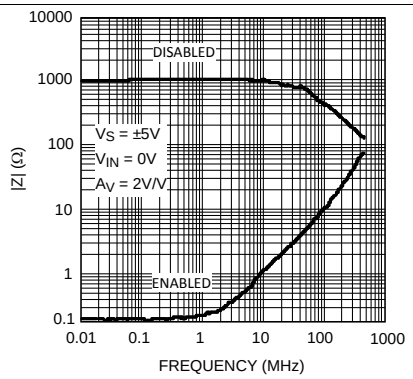

Figure 9. Closed Loop Output Impedance

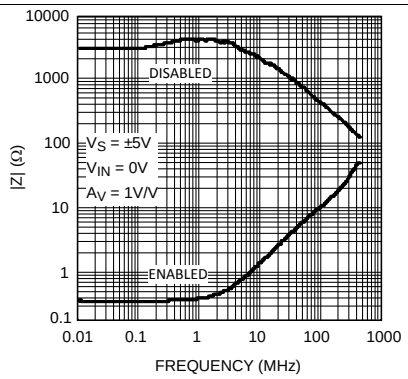

Figure 10. Closed Loop Output Impedance

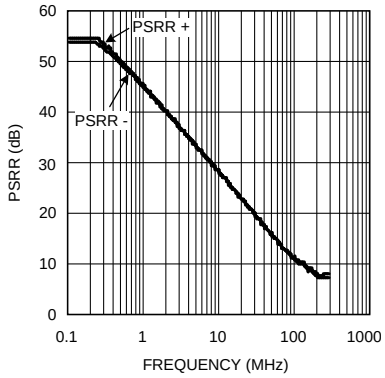

Figure 11. PSRR vs Frequency

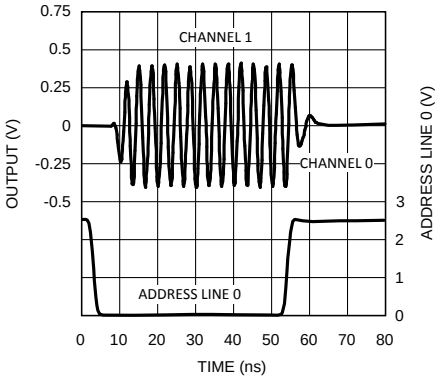

Figure 12. Channel Switching

Typical Characteristics (continued)

V_S = ±5 V, R_L = 100 Ω, A_V = 2, R_F = R_G = 575 Ω, unless otherwise specified.

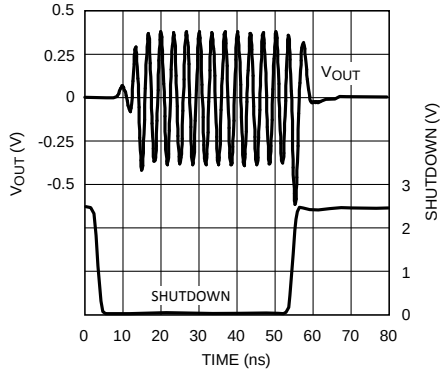

Figure 13. SHUTDOWN Switching

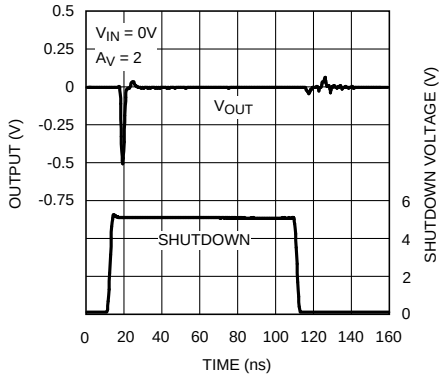

Figure 14. Shutdown Glitch

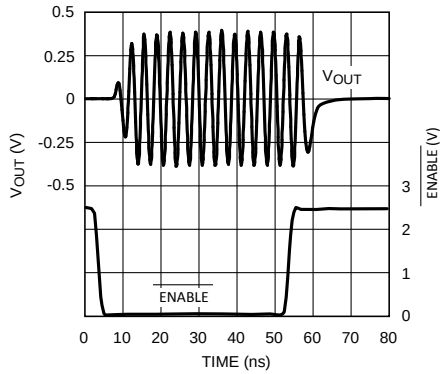

Figure 15. $\overline{\text{ENABLE}}$ Switching

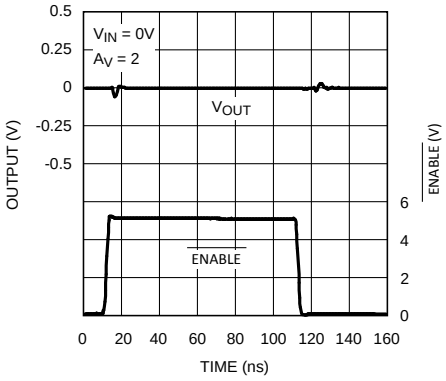

Figure 16. Disable Glitch

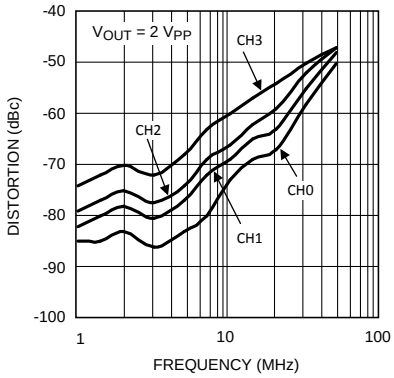

Figure 17. HD2 vs Frequency

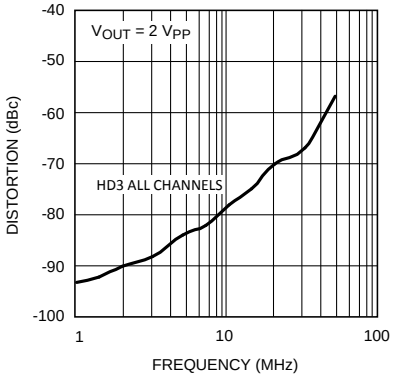

Figure 18. HD3 vs Frequency

Copyright © 2004–2018, Texas Instruments Incorporated

Typical Characteristics (continued)

V_S = ±5 V, R_L = 100 Ω, A_V = 2, R_F = R_G = 575 Ω, unless otherwise specified.

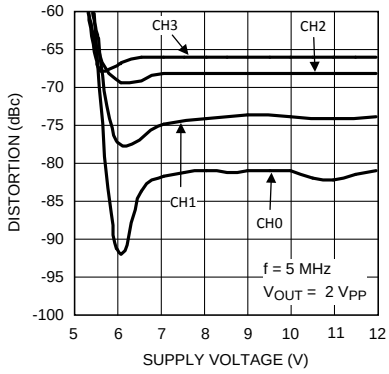

Figure 19. HD2 vs V_S

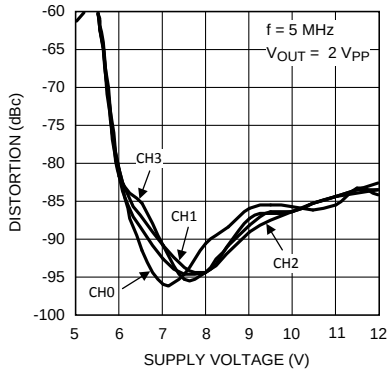

Figure 20. HD3 vs V_S

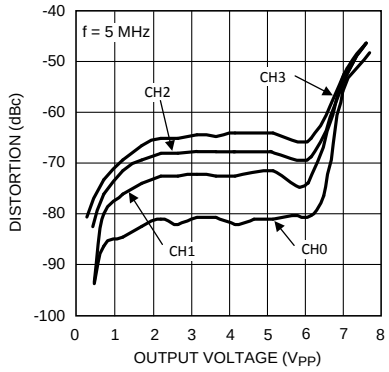

Figure 21. HD2 vs V_{OUT}

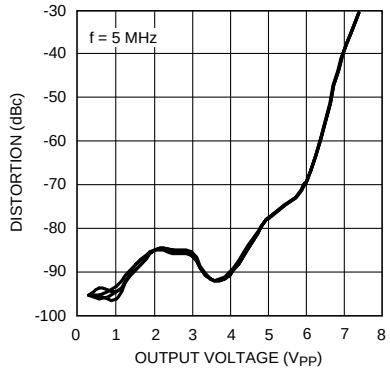

Figure 22. HD3 vs V_{OUT}

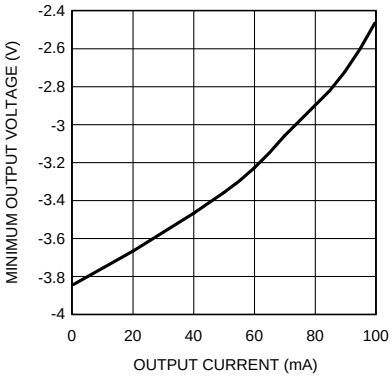

Positive Value is current into device

Figure 23. Minimum V_{OUT} vs I_{OUT}

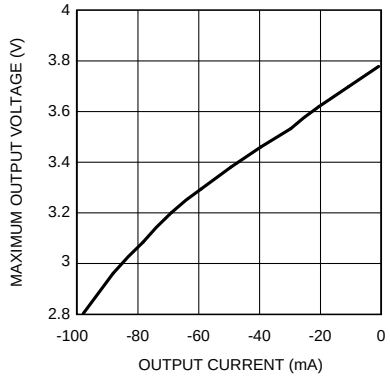

Positive Value is current into device

Figure 24. Maximum V_{OUT} vs I_{OUT}

Typical Characteristics (continued)

V_S = ±5 V, R_L = 100 Ω, A_V = 2, R_F = R_G = 575 Ω, unless otherwise specified.

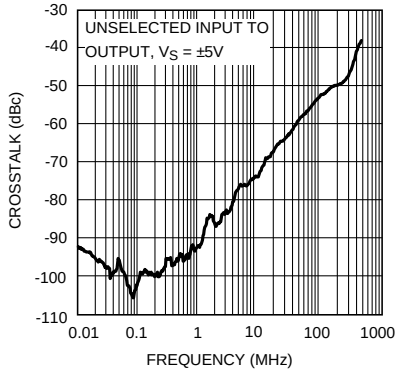

Figure 25. Crosstalk vs Frequency

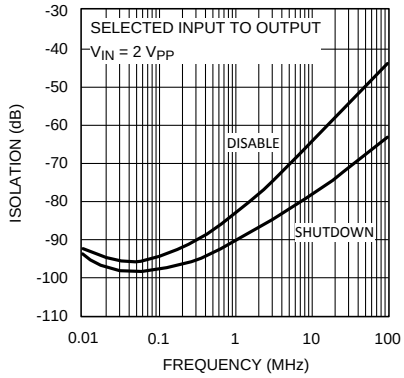

Figure 26. Off Isolation

Copyright © 2004–2018, Texas Instruments Incorporated

7 Detailed Description

7.1 Functional Block Diagram

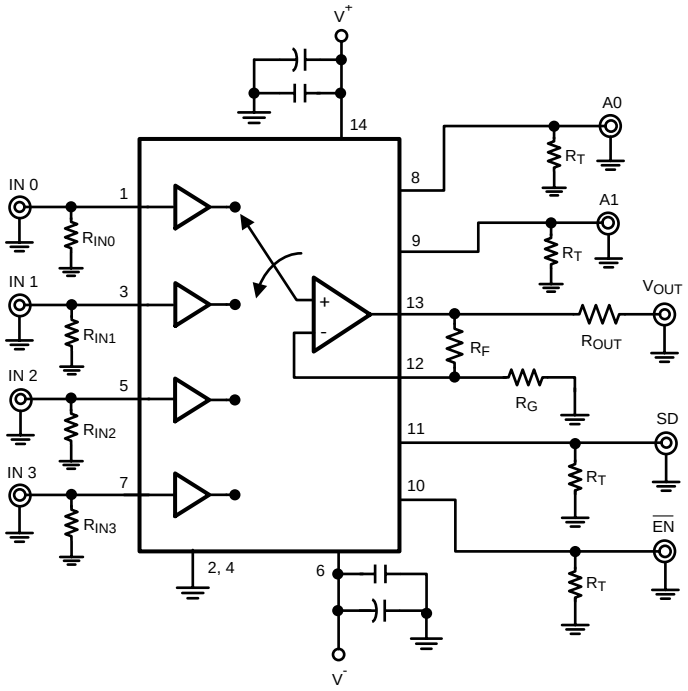

7.2 Feature Description

7.2.1 Video Performance

The LMH6574 has been designed to provide excellent performance with production quality video signals in a wide variety of formats such as HDTV and High Resolution VGA. Best performance will be obtained with back-terminated loads. The back termination reduces reflections from the transmission line and effectively masks transmission line and other parasitic capacitances from the amplifier output stage. The *Functional Block Diagram* shows a typical configuration for driving a 75Ω cable. The output buffer is configured for a gain of 2, so using back terminated loads will give a net gain of 1.

7.2.2 Feedback Resistor Selection

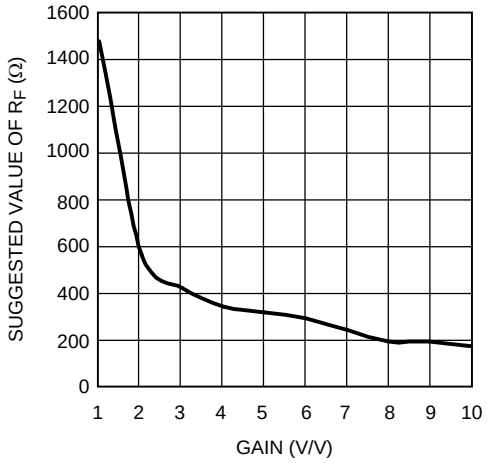

Figure 27. Suggested R_F vs Gain

Feature Description (continued)

The LMH6574 has a current feedback output buffer with gain determined by external feedback (R_F) and gain set (R_G) resistors. With current feedback amplifiers, the closed loop frequency response is a function of R_F. For a gain of 2 V/V, the recommended value of R_F is 575Ω. For other gains see Figure 27. Generally, lowering R_F from the recommended value will peak the frequency response and extend the bandwidth while increasing the value of R_F will cause the frequency response to roll off faster. Reducing the value of R_F too far below the recommended value will cause overshoot, ringing and, eventually, oscillation.

Since all applications are slightly different it is worth some experimentation to find the optimal R_F for a given circuit. For more information see *Current Feedback Loop Gain Analysis and Performance Enhancement*, Application Note OA-13 (SNOA366), which describes the relationship between R_F and closed-loop frequency response for current feedback operational amplifiers. The impedance looking into pin 12 is approximately 20Ω. This allows for good bandwidth at gains up to 10 V/V. When used with gains over 10 V/V, the LMH6574 will exhibit a “gain bandwidth product” similar to a typical voltage feedback amplifier. For gains of over 10 V/V consider selecting a high performance video amplifier like the LMH6720 (SNOSA39) to provide additional gain.

7.2.3 Other Applications

The LMH6574 could support a multi antenna receiver with up to four separate antennas. Monitoring the signal strength of all 4 antennas and connecting the strongest signal to the final IF stage would provide effective spacial diversity.

For direction finding, the LMH6574 could be used to provide high speed sampling of four separate antennas to a single DSP which would use the information to calculate the direction of the received signal.

Copyright © 2004–2018, Texas Instruments Incorporated

Feature Description (continued)

7.2.4 Driving Capacitive Loads

Capacitive output loading applications will benefit from the use of a series output resistor R_{OUT}. Figure 28 shows the use of a series output resistor, R_{OUT}, to stabilize the amplifier output under capacitive loading. Capacitive loads of 5 to 120 pF are the most critical, causing ringing, frequency response peaking and possible oscillation. Figure 29 provides a recommended value for selecting a series output resistor for mitigating capacitive loads. The values suggested in the charts are selected for 0.5 dB or less of peaking in the frequency response. This gives a good compromise between settling time and bandwidth. For applications where maximum frequency response is needed and some peaking is tolerable, the value of R_{OUT} can be reduced slightly from the recommended values.

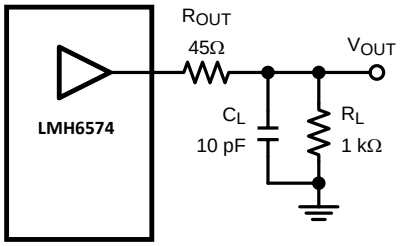

Figure 28. Decoupling Capacitive Loads

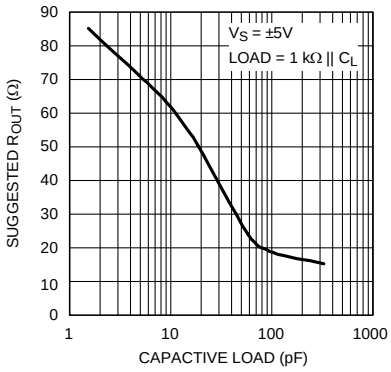

Figure 29. Suggested R_{OUT} vs Capacitive Load

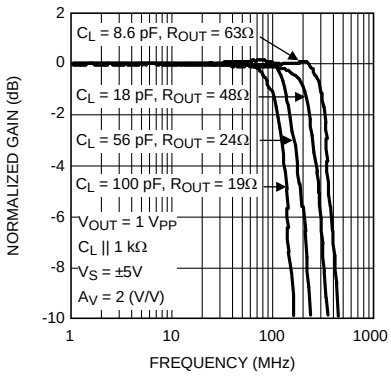

Figure 30. Frequency Response vs Capacitive Load

7.2.5 ESD Protection

The LMH6574 is protected against electrostatic discharge (ESD) on all pins. The LMH6574 will survive 2000-V Human Body model and 200-V Machine model events. Under normal operation the ESD diodes have no effect on circuit performance. There are occasions, however, when the ESD diodes will be evident. If the LMH6574 is driven by a large signal while the device is powered down the ESD diodes will conduct . The current that flows through the ESD diodes will either exit the chip through the supply pins or will flow through the device, hence it is possible to power up a chip with a large signal applied to the input pins. Using the shutdown mode is one way to conserve power and still prevent unexpected operation.

7.3 Device Functional Modes

7.3.1 SD vs $\overline{EN}$

The LMH6574 has both shutdown and disable capability. The shutdown feature affects the entire chip, whereas the disable function only affects the output buffer. When in shutdown mode, minimal power is consumed. The shutdown function is very fast, but causes a very brief spike of about 400 mV to appear on the output. When in shutdown mode the LMH6574 consumes only 1.8 mA of supply current. For maximum input to output isolation use the shutdown function.

The $\overline{EN}$ pin only disables the output buffer which results in a substantially reduced output glitch of only 50 mV. While disabled the chip consumes 4.7 mA, considerably more than when shutdown. This is because the input buffers are still active. For minimal output glitch use the $\overline{EN}$ pin. Also, care should be taken to ensure that, while in the disabled state, the voltage differential between the active input buffer (the one selected by pins A0 and A1) and the output pin stays less than 2V. As the voltage differential increases, input to output isolation decreases. Normally this is not an issue. See *Multiplexer Expansion* for further details.

To reduce the output glitch when using the SD pin, switch the $\overline{EN}$ pin at least 10 ns before switching the SD pin. This can be accomplished by using an RC delay circuit between the two pins if only one control signal is available.

Logic inputs "SD" and "$\overline{EN}$" will revert to the "High", while "A_0" and "A_1" will revert to the "Low" state when left floating.

Copyright © 2004–2018, Texas Instruments Incorporated

8 Application and Implementation

NOTE

Information in the following applications sections is not part of the TI component specification, and TI does not warrant its accuracy or completeness. TI's customers are responsible for determining suitability of components for their purposes. Customers should validate and test their design implementation to confirm system functionality.

8.1 Application Information

The LMH6574 is a high-speed 4:1 analog multiplexer, optimized for very high speed and low distortion. With selectable gain and excellent AC performance, the LMH6574 is ideally suited for switching high resolution, presentation grade video signals. The LMH6574 has no internal ground reference. Single or split supply configurations are both possible. The LMH6574 features very high speed channel switching and disable times. When disabled the LMH6574 output is high impedance making MUX expansion possible by combining multiple devices. See *Multiplexer Expansion*.

8.1.1 Multiplexer Expansion

It is possible to use multiple LMH6574 devices to expand the number of inputs that can be selected for output. Figure 31 shows an 8:1 MUX using two LMH6574 devices.

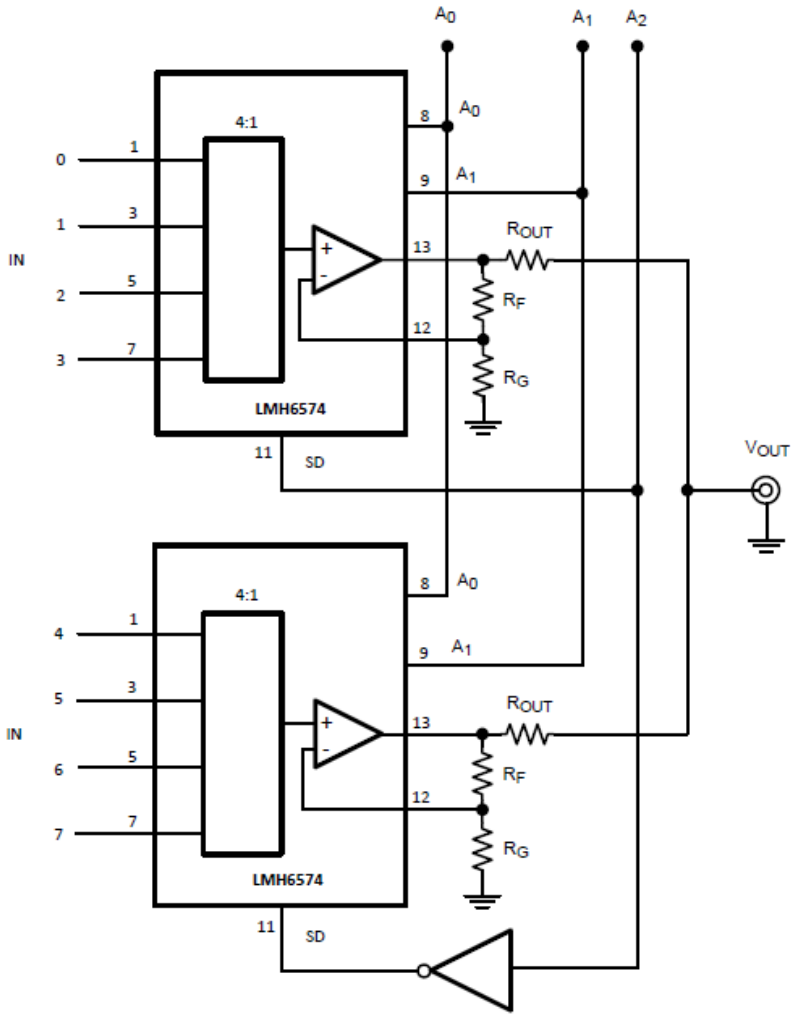

Figure 31. 8:1 MUX Using Two LMH6574 Devices

Application Information (continued)

In such an application, the output settling may be longer than the LMH6574 switching specifications (~20ns), while switching between two separate LMH6574 devices. The switching time limiting factor occurs when one LMH6574 is turned off and another one is turned on, using the SD (shutdown) pin. The output settling time consists of the time needed for the first LMH6574 to enter high impedance state plus the time required for the second LMH6574 output to dissipate the left-over output charge of the first device (limited by the output current capability of the second device) and the time needed to settle to the final voltage value.

While Figure 31 MUX expansion benefits from more isolation, originating from the parasitic loading of the un-selected channels on the selected channel, afforded by individual R_{OUT} on each multiplexer output, this configuration does not produce the fastest transition between individual LMH6574 devices. For the fastest transition, the configuration of Figure 32 can be used where the LMH6574 output pins are all shorted together.

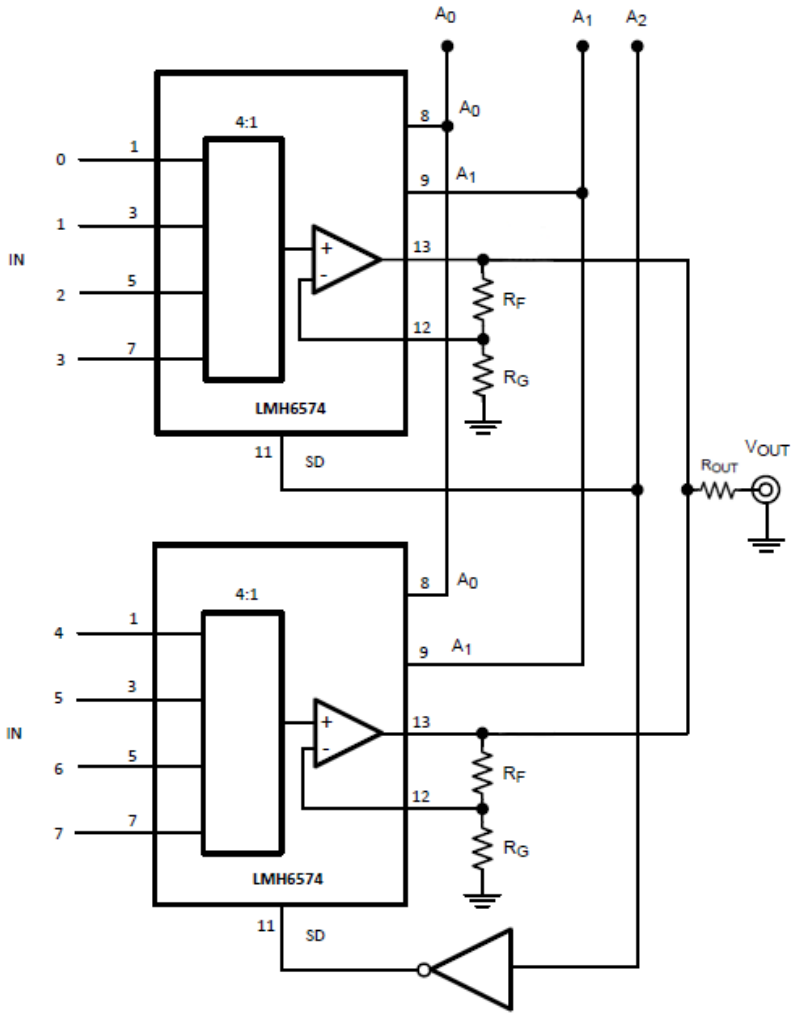

Figure 32. Alternate 8:1 MUX Expansion Schematic (for Faster SD Switching)

Copyright © 2004–2018, Texas Instruments Incorporated

Application Information (continued)

Figure 33 shows typical transition waveforms and shows that SD pin switching settles in less than 145 ns.

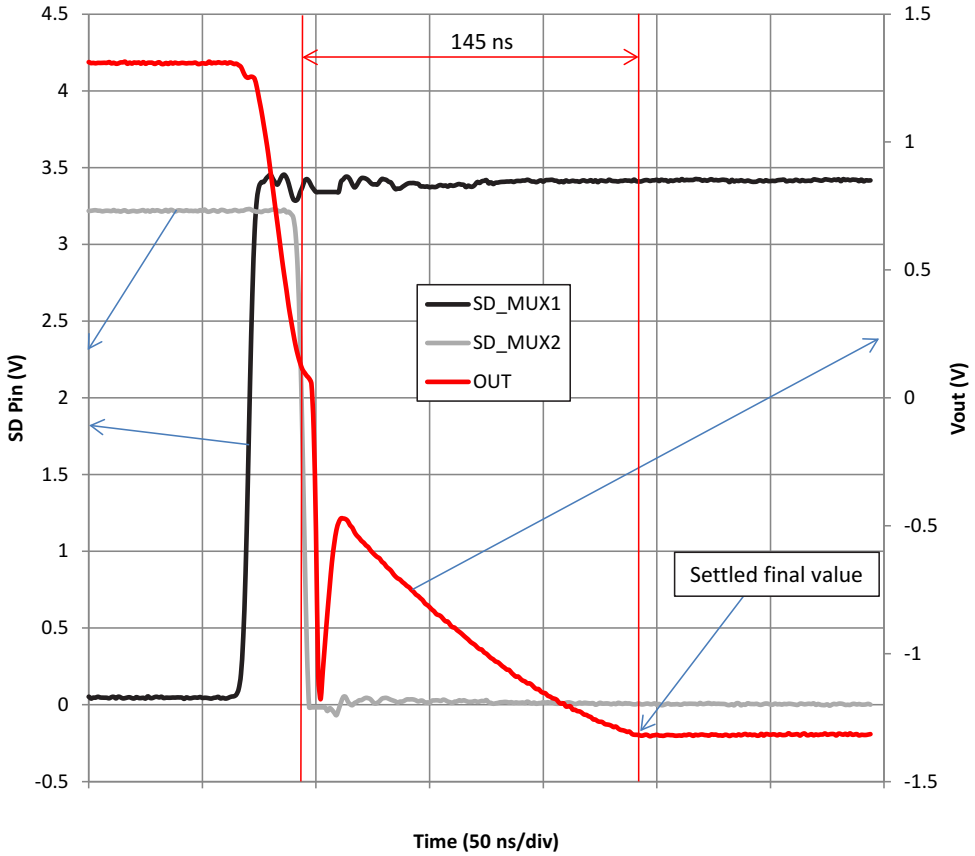

Figure 33. SD Pin Switching Waveform and Output Settling

If it is important in the end application to make sure that no two inputs are presented to the output at the same time, an optional delay block can be added, to drive the SHUTDOWN pin of each device. Figure 34 shows one possible approach to this delay circuit. The delay circuit shown will delay SHUTDOWN's H to L transitions (R1 and C1 decay) but will not delay its L to H transition. R2 should be kept small compared to R1 in order to not reduce the SHUTDOWN voltage and to produce little or no delay to SHUTDOWN.

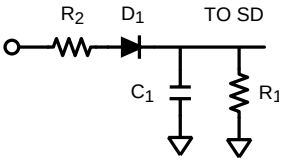

Figure 34. Delay Circuit Implementation

Application Information (continued)

With the SHUTDOWN pin putting the output stage into a high impedance state, several LMH6574's can be tied together to form a larger input MUX. However, there is a loading effect on the active output caused by the unselected devices. The circuit in Figure 35 shows how to compensate for this effect. For the 16:1 MUX function shown in Figure 35, the gain error would be about −0.8 dB, or about 9%. In the circuit in Figure 35, resistor ratios have been adjusted to compensate for this gain error. By adjusting the gain of each multiplexer circuit the error can be reduced to the tolerance of the resistors used (1% in this example).

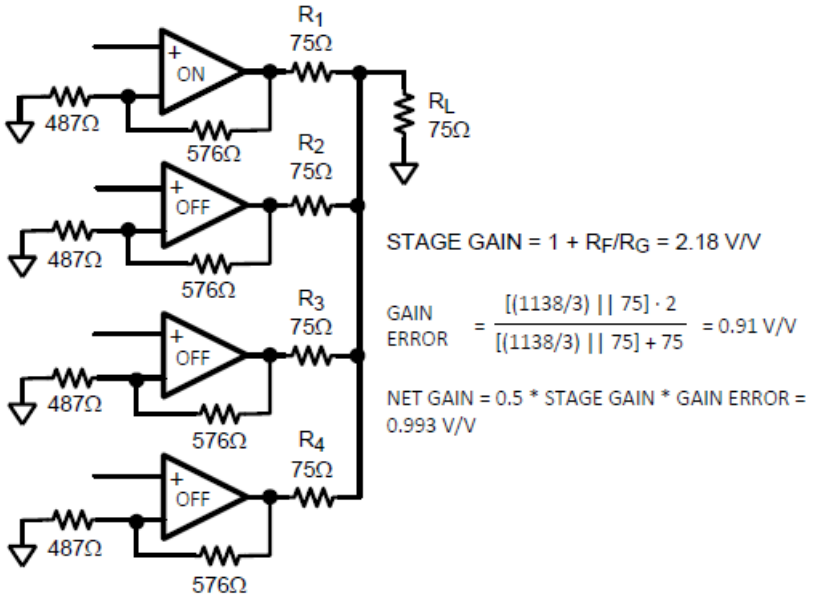

Figure 35. Multiplexer Gain Compensation

NOTE

Disabling of the LMH6574 using the EN pin is not recommended for use when doing multiplexer expansion. While disabled, If the voltage between the selected input and the chip output exceeds approximately 2V the device will begin to enter a soft breakdown state. This will show up as reduced input to output isolation. The signal on the non-inverting input of the output driver amplifier will leak through to the inverting input, and then to the output through the feedback resistor. The worst case is a gain of 1 configuration where the non inverting input follows the active input buffer and (through the feedback resistor) the inverting input follows the voltage driving the output stage. The solution for this is to use shutdown mode for multiplexer expansion.

Copyright © 2004–2018, Texas Instruments Incorporated

9 Power Supply Recommendations

9.1 Power Dissipation

The LMH6574 is optimized for maximum speed and performance in the small form factor of the standard SOIC package. To ensure maximum output drive and highest performance, thermal shutdown is not provided. Therefore, it is of utmost importance to make sure that the T_{JMAX} is never exceeded due to the overall power dissipation.

Follow these steps to determine the Maximum power dissipation for the LMH6574:

1. Calculate the quiescent (no-load) power.

   $P_{AMP} = I_{CC} * (V_S)$

   where

   - $V_S = V^+ - V^-$ (1)

2. Calculate the RMS power dissipated in the output stage:

   P_D (rms) = rms $((V_S - V_{OUT}) * I_{OUT})$

   where

   - V_{OUT} is the voltage across the external load
   - I_{OUT} is the current through the external load
   - V_S is the total supply voltage (2)

3. Calculate the total RMS power: $P_T = P_{AMP} + P_D$.

The maximum power that the LMH6574 package can dissipate at a given temperature can be derived with the following equation:

$P_{MAX} = (150° – T_{AMB})/R_{\theta JA}$

where

- T_{AMB} = Ambient temperature (°C)
- $R_{\theta JA}$ = Thermal resistance, from junction to ambient, for a given package (°C/W) (3)

For the SOIC package $R_{\theta JA}$ is 130 °C/W.

10 Layout

10.1 Layout Guidelines

Whenever questions about layout arise, use the evaluation board LMH730276 as a guide. To reduce parasitic capacitances, ground and power planes should be removed near the input and output pins. For long signal paths controlled impedance lines should be used, along with impedance matching elements at both ends. Bypass capacitors should be placed as close to the device as possible. Bypass capacitors from each rail to ground are applied in pairs. The larger electrolytic bypass capacitors can be located farther from the device, the smaller ceramic capacitors should be placed as close to the device as possible. In the *Functional Block Diagram*, the capacitor between V^+ and V^- is optional, but is recommended for best second harmonic distortion. Another way to enhance performance is to use pairs of 0.01 μF and 0.1 μF ceramic capacitors for each supply bypass.

11 Device and Documentation Support

11.1 Documentation Support

11.1.1 Related Documentation

For additional information, see the following:

- *Current Feedback Loop Gain Analysis and Performance Enhancement* Application Note OA-13
- *IC Package Thermal Metrics* Application Report
- *LMH730276 4:1 Multiplexer Evaluation Board*

11.2 Receiving Notification of Documentation Updates

To receive notification of documentation updates, navigate to the device product folder on ti.com. In the upper right corner, click on *Alert me* to register and receive a weekly digest of any product information that has changed. For change details, review the revision history included in any revised document.

11.3 Community Resources

The following links connect to TI community resources. Linked contents are provided "AS IS" by the respective contributors. They do not constitute TI specifications and do not necessarily reflect TI's views; see TI's Terms of Use.

TI E2E™ Online Community ***TI's Engineer-to-Engineer (E2E) Community.*** Created to foster collaboration among engineers. At e2e.ti.com, you can ask questions, share knowledge, explore ideas and help solve problems with fellow engineers.

Design Support ***TI's Design Support*** Quickly find helpful E2E forums along with design support tools and contact information for technical support.

11.4 Trademarks

E2E is a trademark of Texas Instruments.
All other trademarks are the property of their respective owners.

11.5 Electrostatic Discharge Caution

This integrated circuit can be damaged by ESD. Texas Instruments recommends that all integrated circuits be handled with appropriate precautions. Failure to observe proper handling and installation procedures can cause damage.

ESD damage can range from subtle performance degradation to complete device failure. Precision integrated circuits may be more susceptible to damage because very small parametric changes could cause the device not to meet its published specifications.

11.6 Glossary

SLYZ022 — *TI Glossary*.

This glossary lists and explains terms, acronyms, and definitions.

12 Mechanical, Packaging, and Orderable Information

The following pages include mechanical, packaging, and orderable information. This information is the most current data available for the designated devices. This data is subject to change without notice and revision of this document. For browser-based versions of this data sheet, refer to the left-hand navigation.

Copyright © 2004–2018, Texas Instruments Incorporated

PACKAGING INFORMATION

Orderable Device	Status (1)	Package Type	Package Drawing	Pins	Package Qty	Eco Plan (2)	Lead finish/ Ball material (6)	MSL Peak Temp (3)	Op Temp (°C)	Device Marking (4/5)	Samples
LMH6574MA/NOPB	ACTIVE	SOIC	D	14	55	RoHS & Green	SN	Level-1-260C-UNLIM	-40 to 85	LMH65 74MA	Samples
LMH6574MAX/NOPB	ACTIVE	SOIC	D	14	2500	RoHS & Green	SN	Level-1-260C-UNLIM	-40 to 85	LMH65 74MA	Samples

(1) The marketing status values are defined as follows:
ACTIVE: Product device recommended for new designs.
LIFEBUY: TI has announced that the device will be discontinued, and a lifetime-buy period is in effect.
NRND: Not recommended for new designs. Device is in production to support existing customers, but TI does not recommend using this part in a new design.
PREVIEW: Device has been announced but is not in production. Samples may or may not be available.
OBSOLETE: TI has discontinued the production of the device.

(2) **RoHS:** TI defines "RoHS" to mean semiconductor products that are compliant with the current EU RoHS requirements for all 10 RoHS substances, including the requirement that RoHS substance do not exceed 0.1% by weight in homogeneous materials. Where designed to be soldered at high temperatures, "RoHS" products are suitable for use in specified lead-free processes. TI may reference these types of products as "Pb-Free".
RoHS Exempt: TI defines "RoHS Exempt" to mean products that contain lead but are compliant with EU RoHS pursuant to a specific EU RoHS exemption.
Green: TI defines "Green" to mean the content of Chlorine (Cl) and Bromine (Br) based flame retardants meet JS709B low halogen requirements of <=1000ppm threshold. Antimony trioxide based flame retardants must also meet the <=1000ppm threshold requirement.

(3) MSL, Peak Temp. - The Moisture Sensitivity Level rating according to the JEDEC industry standard classifications, and peak solder temperature.

(4) There may be additional marking, which relates to the logo, the lot trace code information, or the environmental category on the device.

(5) Multiple Device Markings will be inside parentheses. Only one Device Marking contained in parentheses and separated by a "~" will appear on a device. If a line is indented then it is a continuation of the previous line and the two combined represent the entire Device Marking for that device.

(6) Lead finish/Ball material - Orderable Devices may have multiple material finish options. Finish options are separated by a vertical ruled line. Lead finish/Ball material values may wrap to two lines if the finish value exceeds the maximum column width.

Important Information and Disclaimer: The information provided on this page represents TI's knowledge and belief as of the date that it is provided. TI bases its knowledge and belief on information provided by third parties, and makes no representation or warranty as to the accuracy of such information. Efforts are underway to better integrate information from third parties. TI has taken and continues to take reasonable steps to provide representative and accurate information but may not have conducted destructive testing or chemical analysis on incoming materials and chemicals. TI and TI suppliers consider certain information to be proprietary, and thus CAS numbers and other limited information may not be available for release.

In no event shall TI's liability arising out of such information exceed the total purchase price of the TI part(s) at issue in this document sold by TI to Customer on an annual basis.

TAPE AND REEL INFORMATION

REEL DIMENSIONS

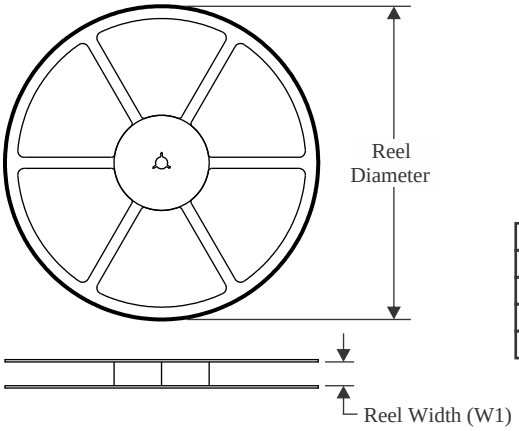

TAPE DIMENSIONS

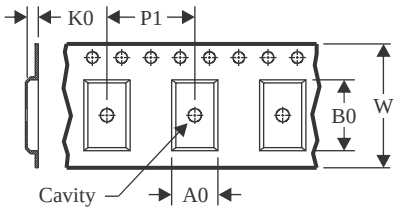

A0	Dimension designed to accommodate the component width
B0	Dimension designed to accommodate the component length
K0	Dimension designed to accommodate the component thickness
W	Overall width of the carrier tape
P1	Pitch between successive cavity centers

QUADRANT ASSIGNMENTS FOR PIN 1 ORIENTATION IN TAPE

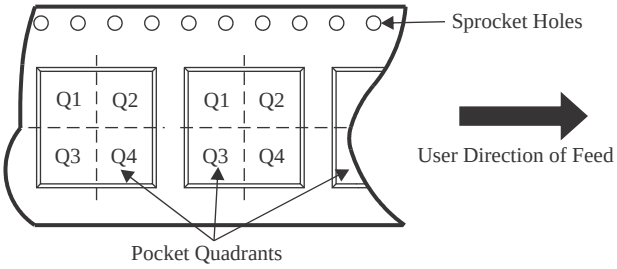

*All dimensions are nominal

Device	Package Type	Package Drawing	Pins	SPQ	Reel Diameter (mm)	Reel Width W1 (mm)	A0 (mm)	B0 (mm)	K0 (mm)	P1 (mm)	W (mm)	Pin1 Quadrant
LMH6574MAX/NOPB	SOIC	D	14	2500	330.0	16.4	6.5	9.35	2.3	8.0	16.0	Q1

TAPE AND REEL BOX DIMENSIONS

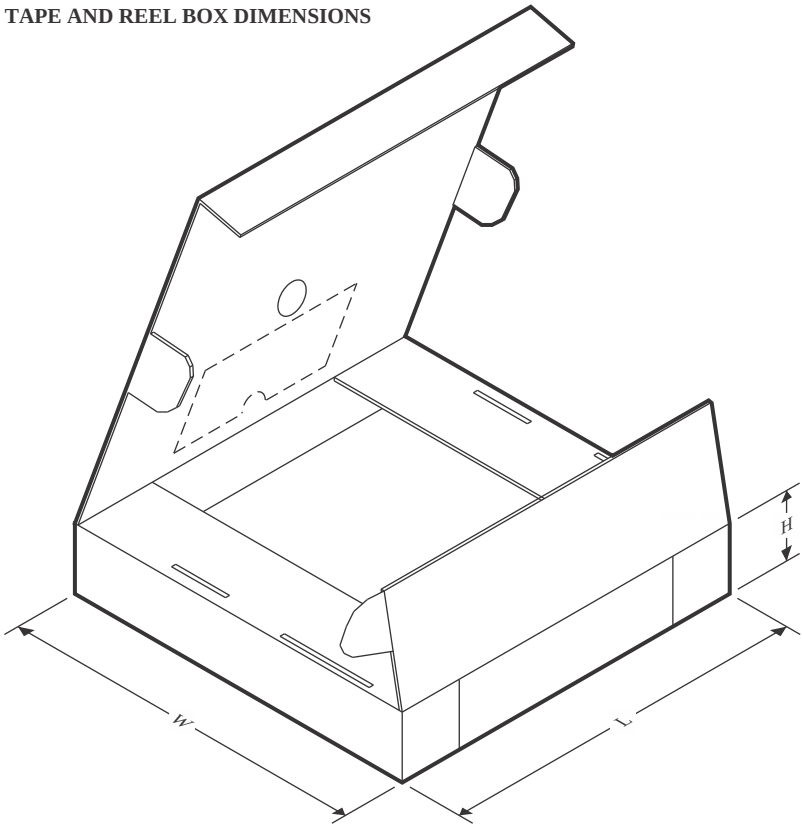

*All dimensions are nominal

Device	Package Type	Package Drawing	Pins	SPQ	Length (mm)	Width (mm)	Height (mm)
LMH6574MAX/NOPB	SOIC	D	14	2500	367.0	367.0	35.0

TUBE

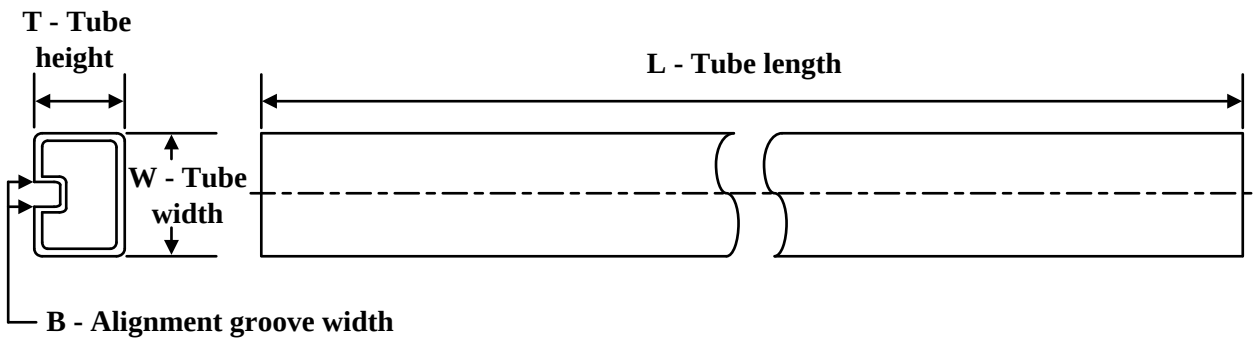

*All dimensions are nominal

Device	Package Name	Package Type	Pins	SPQ	L (mm)	W (mm)	T (µm)	B (mm)
LMH6574MA/NOPB	D	SOIC	14	55	495	8	4064	3.05

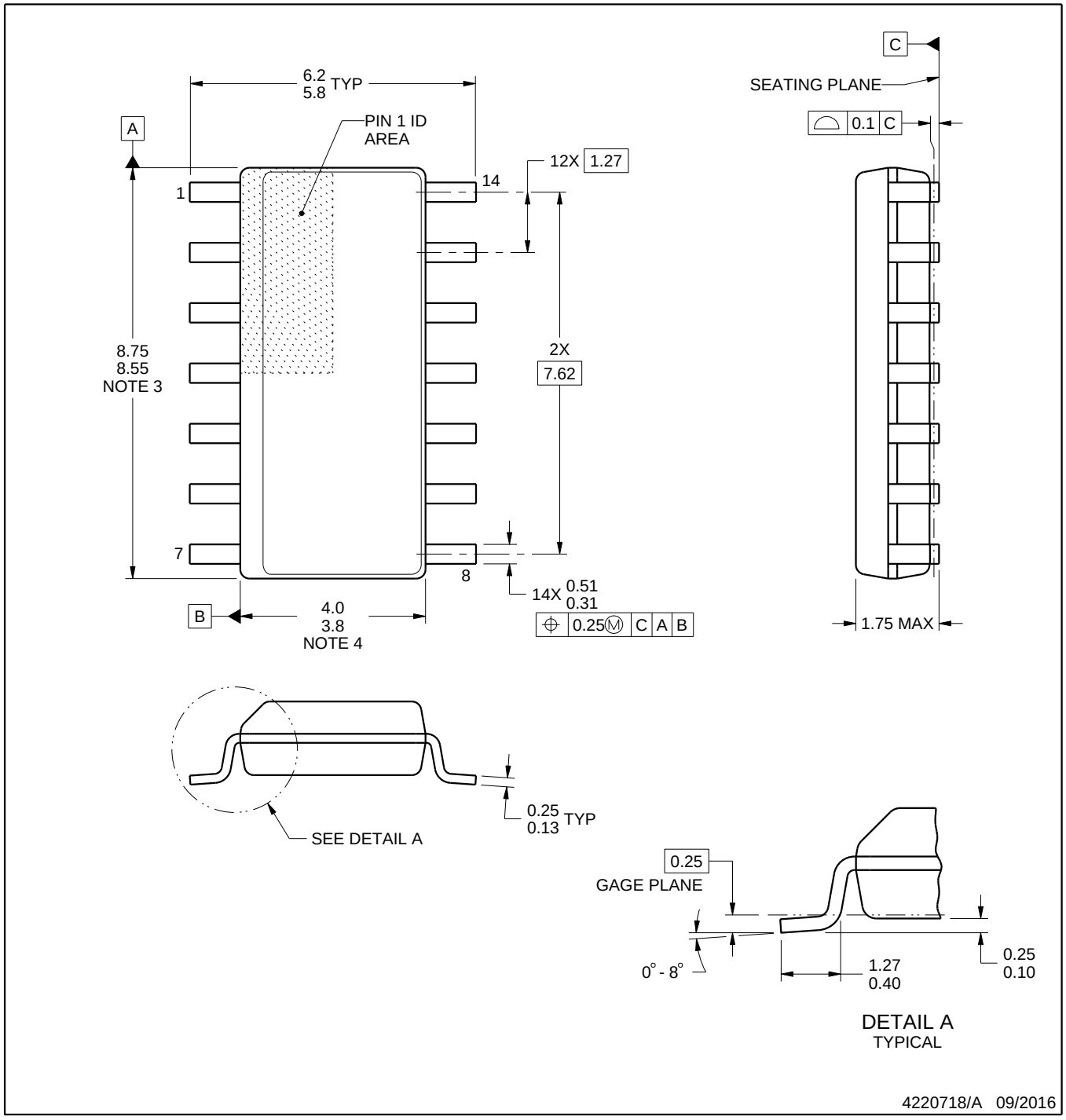

NOTES:

1. All linear dimensions are in millimeters. Dimensions in parenthesis are for reference only. Dimensioning and tolerancing per ASME Y14.5M.
2. This drawing is subject to change without notice.
3. This dimension does not include mold flash, protrusions, or gate burrs. Mold flash, protrusions, or gate burrs shall not exceed 0.15 mm, per side.
4. This dimension does not include interlead flash. Interlead flash shall not exceed 0.43 mm, per side.
5. Reference JEDEC registration MS-012, variation AB.

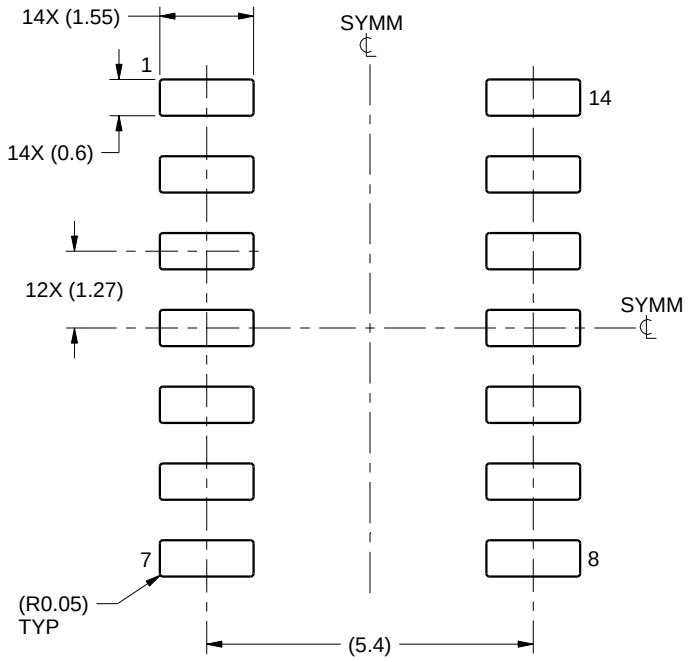

LAND PATTERN EXAMPLE
SCALE:8X

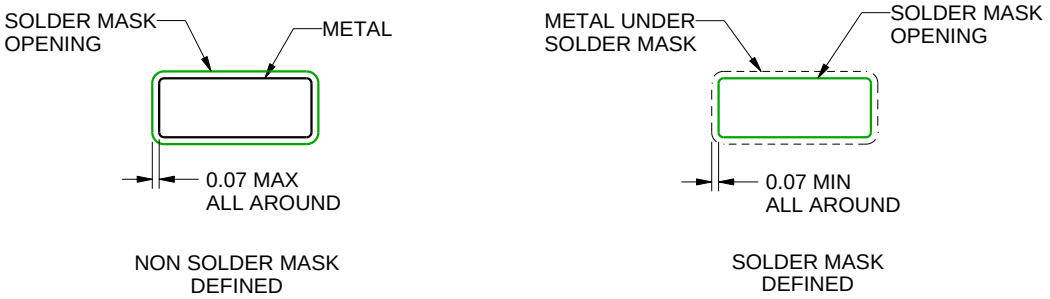

SOLDER MASK DETAILS

4220718/A 09/2016

NOTES: (continued)

6. Publication IPC-7351 may have alternate designs.
7. Solder mask tolerances between and around signal pads can vary based on board fabrication site.

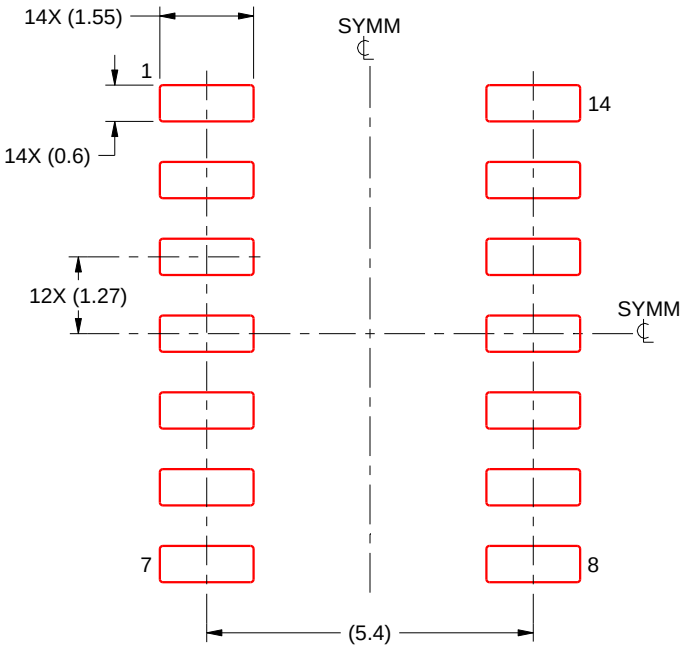

SOLDER PASTE EXAMPLE
BASED ON 0.125 mm THICK STENCIL
SCALE:8X

4220718/A 09/2016

NOTES: (continued)

8. Laser cutting apertures with trapezoidal walls and rounded corners may offer better paste release. IPC-7525 may have alternate design recommendations.
9. Board assembly site may have different recommendations for stencil design.

IMPORTANT NOTICE AND DISCLAIMER

TI PROVIDES TECHNICAL AND RELIABILITY DATA (INCLUDING DATA SHEETS), DESIGN RESOURCES (INCLUDING REFERENCE DESIGNS), APPLICATION OR OTHER DESIGN ADVICE, WEB TOOLS, SAFETY INFORMATION, AND OTHER RESOURCES “AS IS” AND WITH ALL FAULTS, AND DISCLAIMS ALL WARRANTIES, EXPRESS AND IMPLIED, INCLUDING WITHOUT LIMITATION ANY IMPLIED WARRANTIES OF MERCHANTABILITY, FITNESS FOR A PARTICULAR PURPOSE OR NON-INFRINGEMENT OF THIRD PARTY INTELLECTUAL PROPERTY RIGHTS.

These resources are intended for skilled developers designing with TI products. You are solely responsible for (1) selecting the appropriate TI products for your application, (2) designing, validating and testing your application, and (3) ensuring your application meets applicable standards, and any other safety, security, regulatory or other requirements.

These resources are subject to change without notice. TI grants you permission to use these resources only for development of an application that uses the TI products described in the resource. Other reproduction and display of these resources is prohibited. No license is granted to any other TI intellectual property right or to any third party intellectual property right. TI disclaims responsibility for, and you will fully indemnify TI and its representatives against, any claims, damages, costs, losses, and liabilities arising out of your use of these resources.

TI’s products are provided subject to TI’s Terms of Sale or other applicable terms available either on ti.com or provided in conjunction with such TI products. TI’s provision of these resources does not expand or otherwise alter TI’s applicable warranties or warranty disclaimers for TI products.

TI objects to and rejects any additional or different terms you may have proposed.

Mailing Address: Texas Instruments, Post Office Box 655303, Dallas, Texas 75265
Copyright © 2024, Texas Instruments Incorporated