

SBOS333B – JULY 2005 – REVISED OCTOBER 2005

Precision, Gain of 0.2 Level Translation DIFFERENCE AMPLIFIER

FEATURES

- **GAIN OF 0.2 TO INTERFACE ±10V SIGNALS TO SINGLE-SUPPLY ADCs**
- **GAIN ACCURACY: ±0.024% (max)**
- **WIDE BANDWIDTH: 1.5MHz**
- **HIGH SLEW RATE: 15V/μs**
- **LOW OFFSET VOLTAGE: ±100μV**
- **LOW OFFSET DRIFT: ±1.5μV/°C**
- **SINGLE-SUPPLY OPERATION DOWN TO 1.8V**

APPLICATIONS

- **INDUSTRIAL PROCESS CONTROLS**
- **INSTRUMENTATION**
- **DIFFERENTIAL TO SINGLE-ENDED CONVERSION**
- **AUDIO LINE RECEIVERS**

DESCRIPTION

The INA159 is a high slew rate, G = 1/5 difference amplifier consisting of a precision op amp with a precision resistor network. The gain of 1/5 makes the INA159 useful to couple ±10V signals to single-supply analog-to-digital converters (ADCs), particularly those operating on a single +5V supply. The on-chip resistors are laser-trimmed for accurate gain and high common-mode rejection. Excellent temperature coefficient of resistance (TCR) tracking of the resistors maintains gain accuracy and common-mode rejection over temperature. The input common-mode voltage range extends beyond the positive and negative supply rails. It operates on a total of +1.8V to +5.5V single or split supplies. The INA159 reference input uses two resistors for easy mid-supply or reference biasing.

The difference amplifier is the foundation of many commonly-used circuits. The INA159 provides this circuit function without using an expensive external precision resistor network. The INA159 is available in an MSOP-8 surface-mount package and is specified for operation over the extended industrial temperature range, –40°C to +125°C.

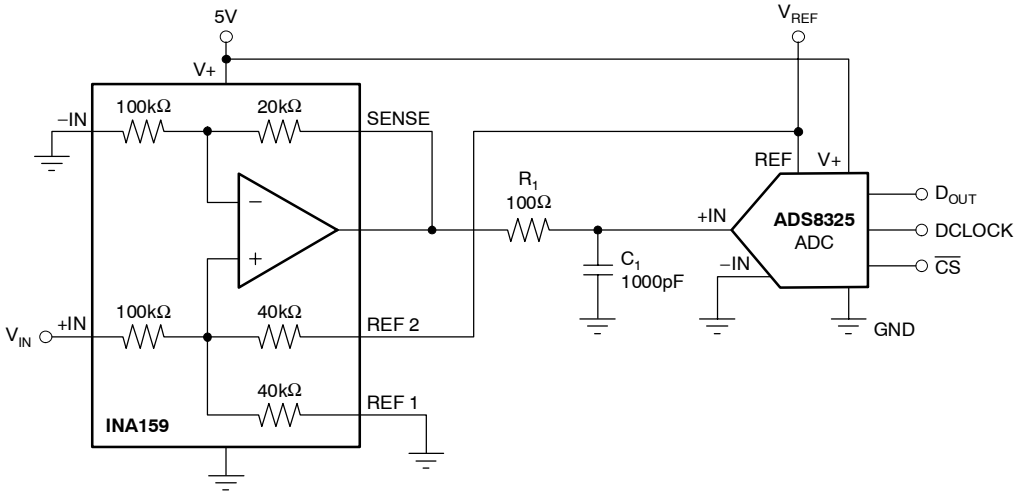

Figure 1. Typical Application

Please be aware that an important notice concerning availability, standard warranty, and use in critical applications of Texas Instruments semiconductor products and disclaimers thereto appears at the end of this data sheet.

All trademarks are the property of their respective owners.

PRODUCTION DATA information is current as of publication date. Products conform to specifications per the terms of Texas Instruments standard warranty. Production processing does not necessarily include testing of all parameters.

Copyright © 2005, Texas Instruments Incorporated

ABSOLUTE MAXIMUM RATINGS(1)

Supply Voltage	+5.5V
Signal Input Terminals (–IN and +IN), Voltage	±30V
Reference (REF 1 and REF2) and Sense Pins	
Current	±10mA
Voltage	(V–) – 0.5V to (V+) + 0.5V
Output Short Circuit	Continuous
Operating Temperature	–40°C to +150°C
Storage Temperature	–65°C to +150°C
Junction Temperature	+150°C
ESD Rating	
Human Body Model	4000V
Charged Device Model	1000V

(1) Stresses above these ratings may cause permanent damage. Exposure to absolute maximum conditions for extended periods may degrade device reliability. These are stress ratings only, and functional operation of the device at these or any other conditions beyond those specified is not supported.

This integrated circuit can be damaged by ESD. Texas Instruments recommends that all integrated circuits be handled with appropriate precautions. Failure to observe proper handling and installation procedures can cause damage.

ESD damage can range from subtle performance degradation to complete device failure. Precision integrated circuits may be more susceptible to damage because very small parametric changes could cause the device not to meet its published specifications.

ORDERING INFORMATION(1)

PRODUCT	PACKAGE-LEAD	PACKAGE DESIGNATOR	PACKAGE MARKING
INA159	MSOP-8	DGK	CJB

(1) For the most current package and ordering information, see the Package Option Addendum at the end of this document, or see the TI web site at www.ti.com.

PIN CONFIGURATIONS

TOP VIEW **MSOP**

INA159

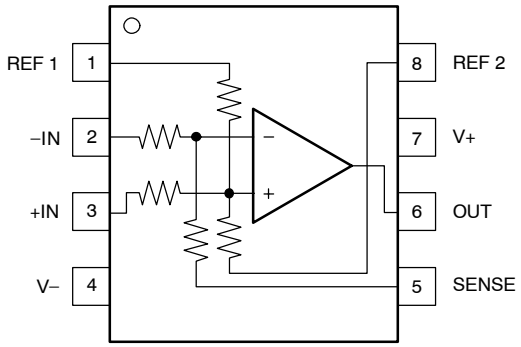

ELECTRICAL CHARACTERISTICS: V_S = +5V

Boldface limits apply over the specified temperature range, **T_A = –40°C to +125°C.**

At T_A = +25°C, R_L = 10kΩ connected to V_S/2, REF pin 1 connected to ground, and REF pin 2 connected to V_{REF} = 5V, unless otherwise noted.

PARAMETER		CONDITIONS	INA159 MIN	INA159 TYP	INA159 MAX	UNIT
OFFSET VOLTAGE(1)		RTO				
Initial (1)	V_{OS}	V_S = ±2.5V, Reference and Input Pins Grounded		±100	±500	µV
vs Temperature				**±1.5**		**µV/°C**
vs Power Supply	PSRR	V_S = ±0.9V to ±2.75V		±20	±100	µV/V
Reference Divider Accuracy(2)				±0.002	±0.024	%
over Temperature				**±0.002**		**%**
INPUT IMPEDANCE(3)						
Differential				240		kΩ
Common-Mode				60		kΩ
INPUT VOLTAGE RANGE		RTI				
Common-Mode Voltage Range	V_{CM}					
Positive				17.5		V
Negative				–12.5		V
Common-Mode Rejection Ratio	CMRR	V_{CM} = –10V to +10V, R_S = 0Ω	80	96		dB
over Temperature				**94**		**dB**
OUTPUT VOLTAGE NOISE(4)		RTO				
f = 0.1Hz to 10Hz				10		μV_{PP}
f = 10kHz				30		$nV/\sqrt{Hz}$
GAIN		V_{REF2} = 4.096V, R_L Connected to GND, $(V_{IN+}) - (V_{IN-})$ = –10V to +10V, V_{CM} = 0V				
Initial	G			0.2		V/V
Error				±0.005	±0.024	%
vs Temperature				**±1**		**ppm/°C**
Nonlinearity				±0.0002		% of FS
OUTPUT						
Voltage, Positive		V_{REF2} = 4.096V, R_L Connected to GND	(V+) – 0.1	(V+) – 0.02		V
Voltage, Negative		V_{REF2} = 4.096V, R_L Connected to GND	(V–) + 0.048	(V–) + 0.01		V
Current Limit, Continuous to Common				±60		mA
Capacitive Load				See Typical Characteristic		pF
Open-Loop Output Impedance	R_O	f = 1MHz, I_O = 0		110		Ω
FREQUENCY RESPONSE						
Small-Signal Bandwidth		–3dB		1.5		MHz
Slew Rate	SR			15		V/µs
Settling Time, 0.01%	t_S	4V Output Step, C_L = 100pF		1		µs
Overload Recovery Time		50% Overdrive		250		ns
POWER SUPPLY						
Specified Voltage Range	V_S			+5		V
Operating Voltage Range			+1.8		+5.5	V
Quiescent Current	I_Q	I_O = 0mA, V_S = ±2.5V, Reference and Input Pins Grounded		1.1	1.5	mA
TEMPERATURE RANGE						
Specified Range			–40		+125	°C
Operating Range			–40		+150	°C
Storage Range			–65		+150	°C
Thermal Resistance	θ_{JA}					
MSOP-8		Surface-Mount		150		°C/W

(1) Includes effects of amplifier input bias and offset currents.
(2) Reference divider accuracy specifies the match between the reference divider resistors using the configuration in Figure 2.
(3) Internal resistors are ratio matched but have ±20% absolute value.
(4) Includes effects of amplifier input current noise and thermal noise contribution of resistor network.

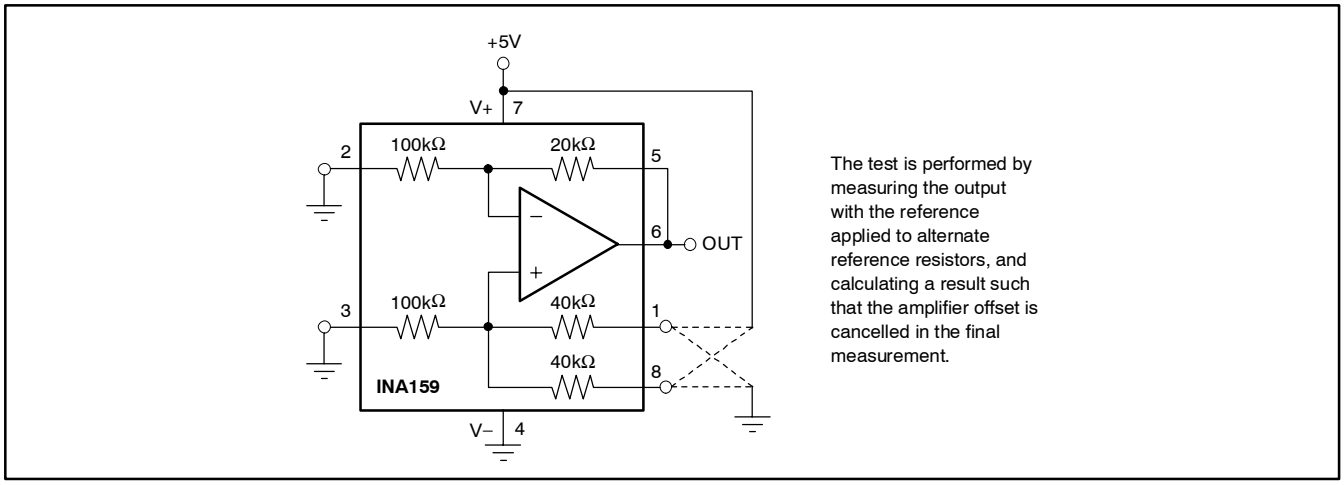

Figure 2. Test Circuit for Reference Divider Accuracy

TYPICAL CHARACTERISTICS

At T_A = +25°C, R_L = 10kΩ connected to V_S/2, REF pin 1 connected to ground, and REF pin 2 connected to V_{REF} = 5V, unless otherwise noted.

OFFSET VOLTAGE PRODUCTION DISTRIBUTION

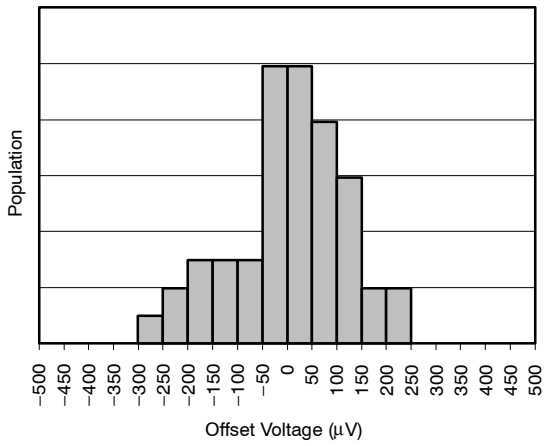

OFFSET VOLTAGE DRIFT PRODUCTION DISTRIBUTION

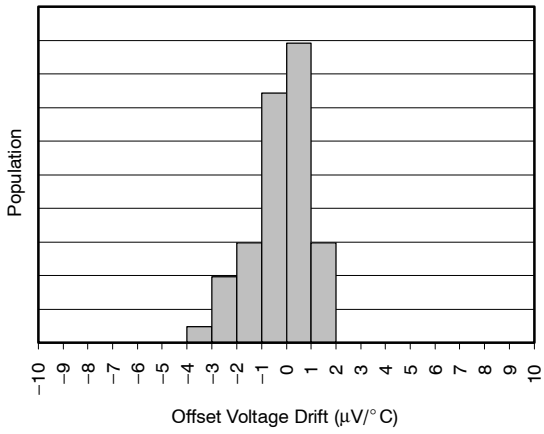

GAIN vs FREQUENCY

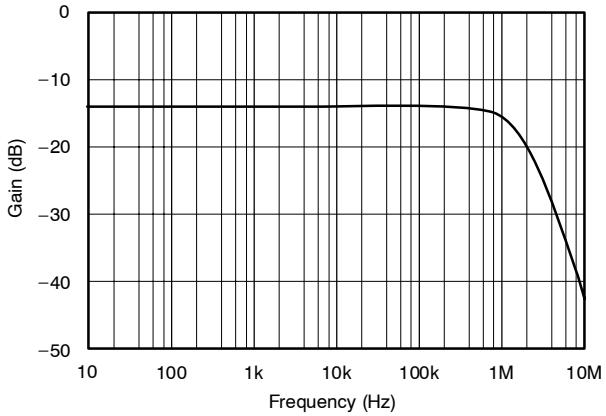

POWER−SUPPLY REJECTION RATIO vs FREQUENCY

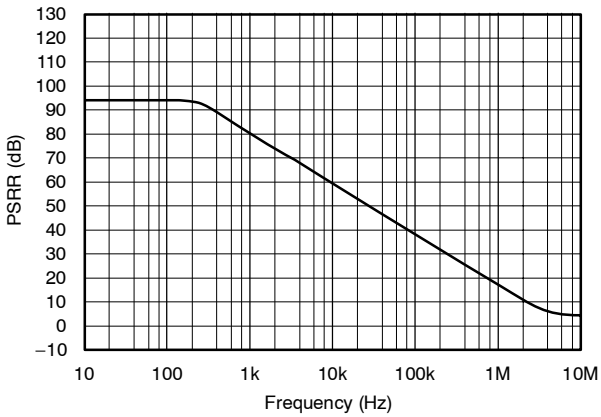

TYPICAL CHARACTERISTICS (continued)

At T_A = +25°C, R_L = 10kΩ connected to V_S/2, REF pin 1 connected to ground, and REF pin 2 connected to V_{REF} = 5V, unless otherwise noted.

COMMON–MODE REJECTION RATIO vs FREQUENCY

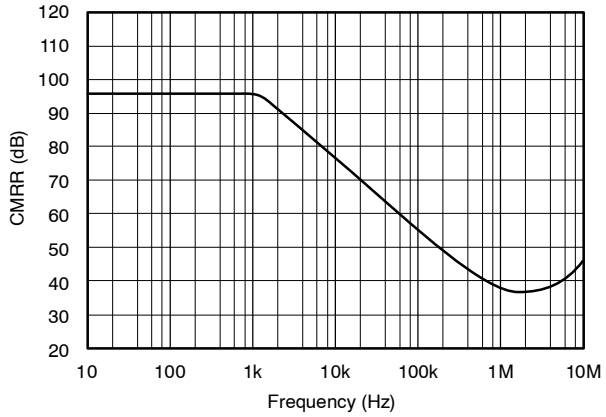

QUIESCENT CURRENT vs TEMPERATURE

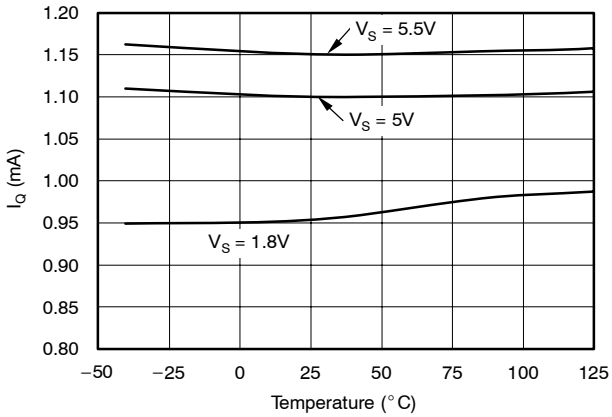

SHORT–CIRCUIT CURRENT vs TEMPERATURE

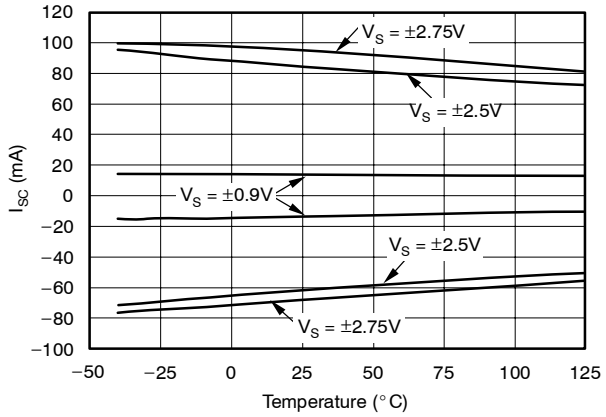

OUTPUT VOLTAGE SWING vs OUTPUT CURRENT

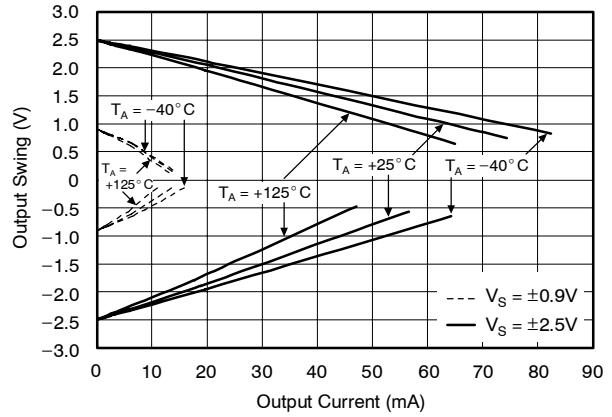

TOTAL HARMONIC DISTORTION + NOISE vs FREQUENCY

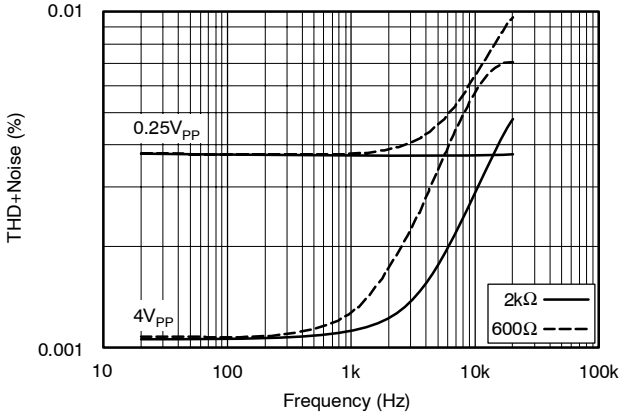

OUTPUT VOLTAGE NOISE SPECTRAL DENSITY vs FREQUENCY

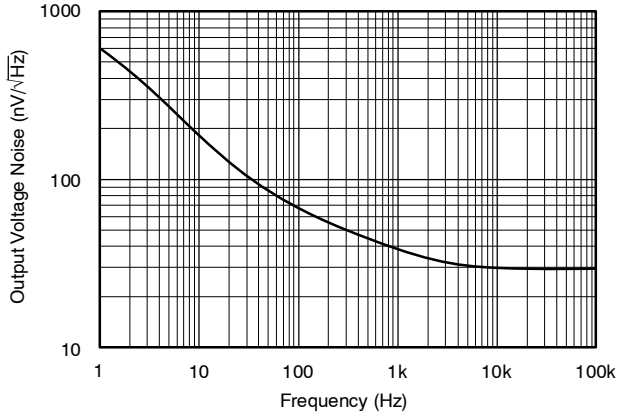

TYPICAL CHARACTERISTICS (continued)

At T_A = +25°C, R_L = 10kΩ connected to V_S/2, REF pin 1 connected to ground, and REF pin 2 connected to V_{REF} = 5V, unless otherwise noted.

0.1Hz TO 10Hz NOISE

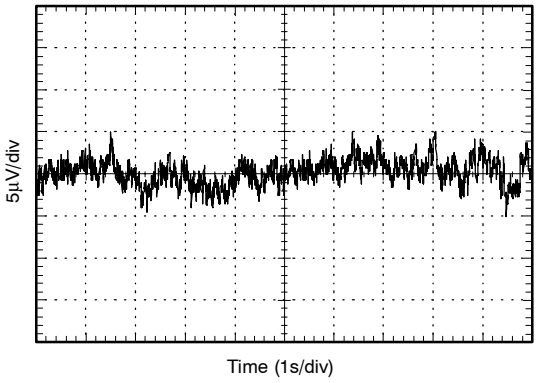

SMALL–SIGNAL OVERSHOOT vs LOAD CAPACITANCE

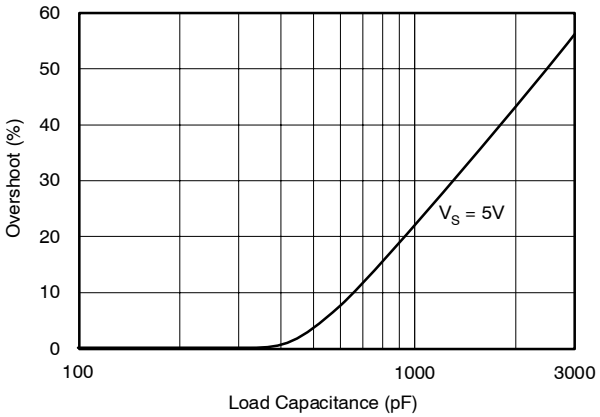

SMALL–SIGNAL STEP RESPONSE

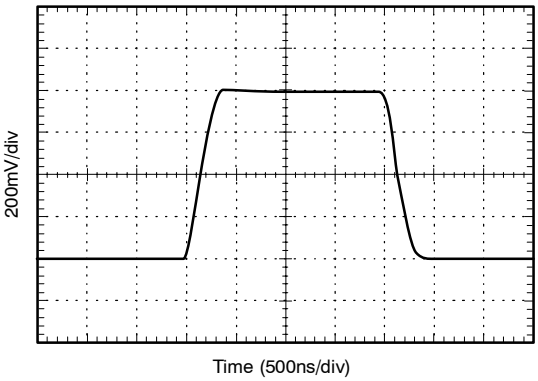

LARGE–SIGNAL STEP RESPONSE

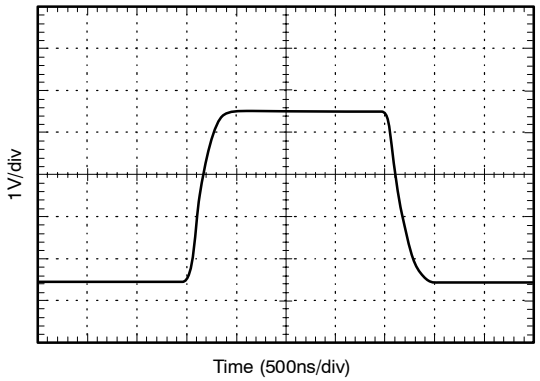

SETTLING TIME

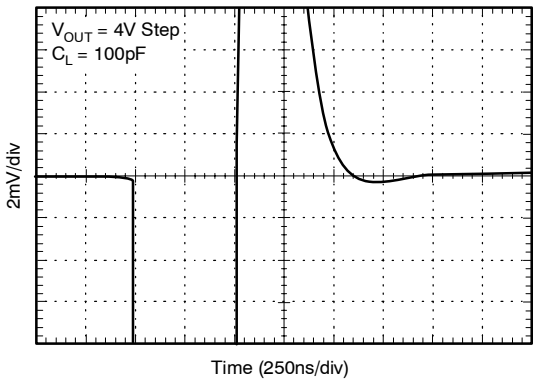

APPLICATION INFORMATION

The internal op amp of the INA159 has a rail-to-rail common-mode voltage capability at its inputs. A rail-to-rail op amp allows the use of ±10V inputs into a circuit biased to 1/2 of a 5V reference (2.5V quiescent output). The inputs to the op amp will swing from approximately 400mV to 3.75V in this application.

The unique input topology of the INA159 eliminates the input offset transition region typical of most rail-to-rail complementary stage operational amplifiers. This allows the INA159 to provide superior glitch- and transition-free performance over the entire common-mode range.

Good layout practice includes the use of a 0.1μF bypass capacitor placed closely across the supply pins.

COMMON-MODE RANGE

The common-mode range of the INA159 is a function of supply voltage and reference. Where both pins, REF1 and REF2, are connected together:

$$V_{CM+} = (V+) + 5[(V+) - V_{REF}] \quad (1)$$

$$V_{CM-} = (V-) - 5[V_{REF} - (V-)] \quad (2)$$

Where one REF pin is connected to the reference, and the other pin grounded (1/2 reference connection):

$$V_{CM+} = (V+) + 5[(V+) - (0.5V_{REF})] \quad (3)$$

$$V_{CM-} = (V-) - 5[(0.5V_{REF}) - (V-)] \quad (4)$$

Some typical values are shown in Table 1.

Table 1. Common-Mode Range For Various Supply and Reference Voltages

REF 1 and REF 2 Connected Together				
V+	**V–**	**V_{REF}**	**V_{CM+}**	**V_{CM-}**
5	0	3	15	–15
5	0	2.5	17.5	–12.5
5	0	1.25	23.75	–6.25
1/2 Reference Connection				
V+	**V–**	**V_{REF}**	**V_{CM+}**	**V_{CM-}**
5	0	5	17.5	–12.5
5	0	4.096	19.76	–10.24
5	0	2.5	23.75	–6.25
3.3	0	3.3	11.55	–8.25
3.3	0	2.5	13.55	–6.25
3.3	0	1.25	16.675	–3.125

Table 2. Input and Output Relationships for Various Reference and Connection Combinations

V_{REF} (V)	REF CONNECTION	V_{OUT} for V_{IN} = 0 (V)	LINEAR V_{IN} RANGE (V)	USEFUL V_{OUT} SWING (V)
5	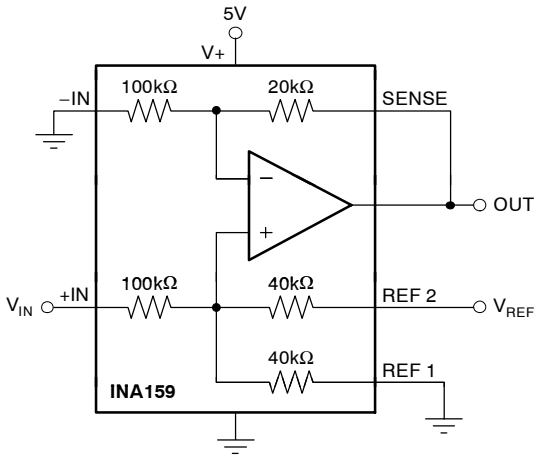	2.5	+10 0 –10	4.5 (±2V swing) 0.5
4.096		2.048	+10 0 –10	4.048 (±2V swing) 0.048
3.3		1.65	+10 0 –7.885	3.65 (–1.577V, +2V swing) 0.048
2.5		1.25	+10 (also +5) 0 –6 (also –5)	3.25 (–1.2V, +2V swing) 0.048
1.8		0.9	+10 0 –4.26	2.9 (–0.852V, +2V swing) 0.048
2.5	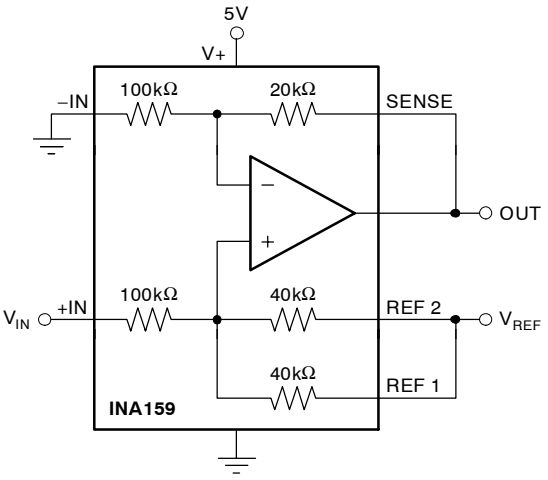	2.5	+10 0 –10	4.5 (±2V swing) 0.5
1.8		1.8	+10 0 –8.76	3.8 (–1.752V, +2V swing) 0.048
1.2		1.2	+10 0 –5.76	3.2 (–1.15V, +2V swing) 0.048

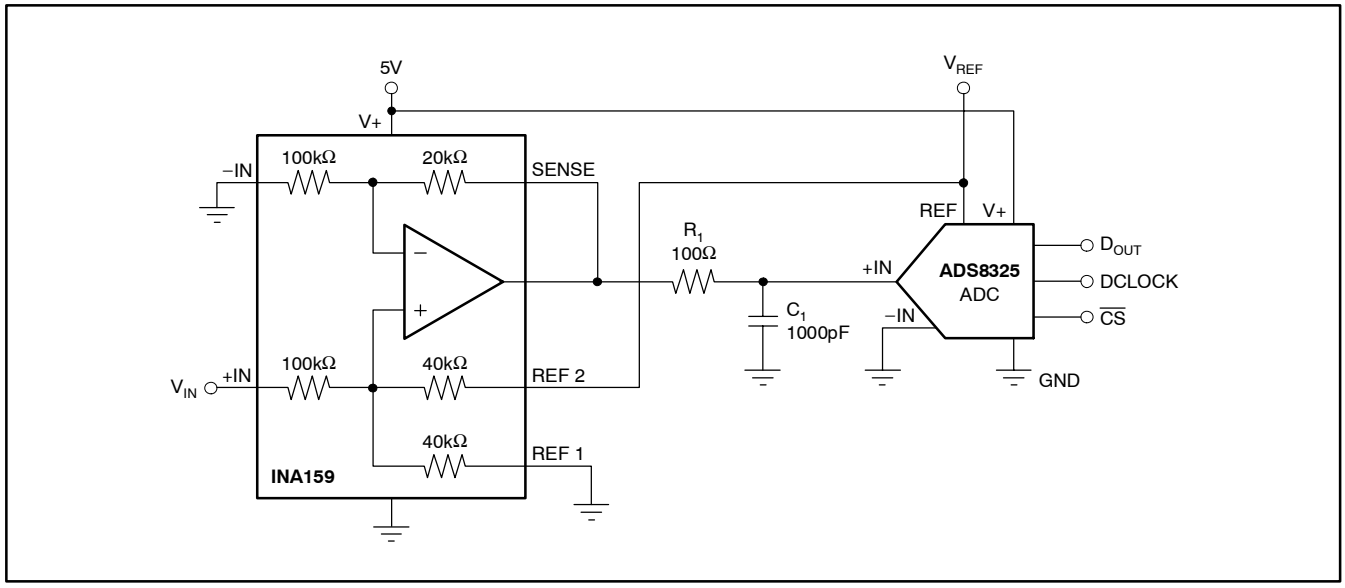

Figure 3. Typical Application Circuit Interfacing to Medium-Speed, Single-Supply ADCs

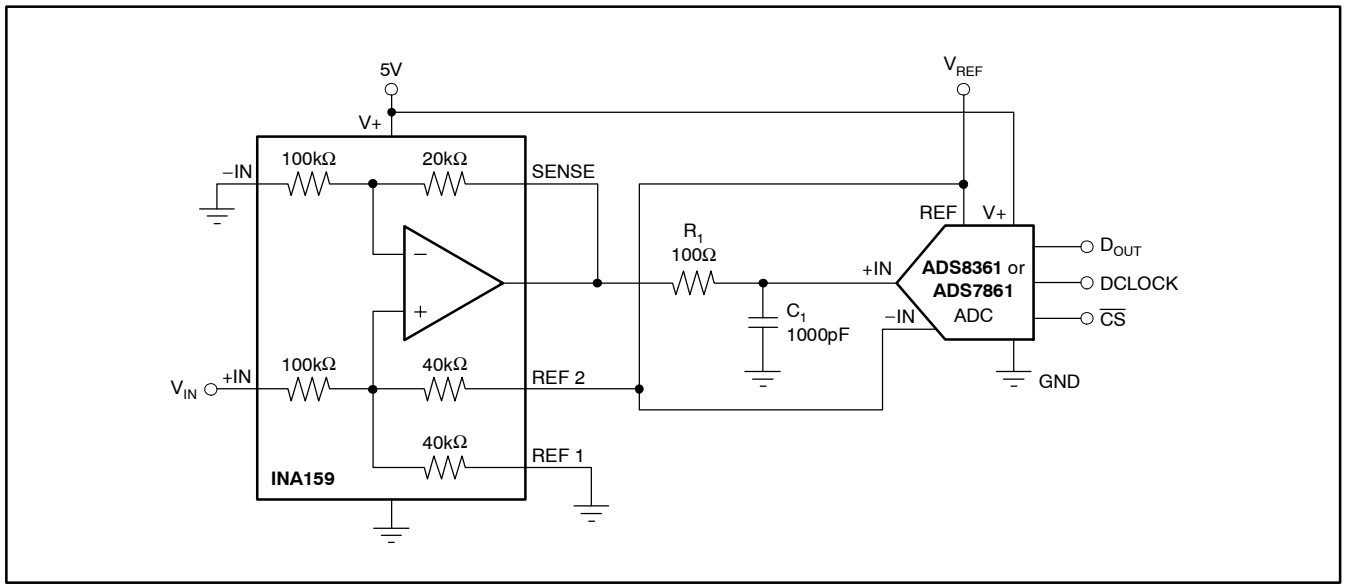

Figure 4. Typical Application Circuit Interfacing to Medium-Speed, Single-Supply ADCs with Pseudo-Differential Inputs (such as the ADS7861 and ADS8361)

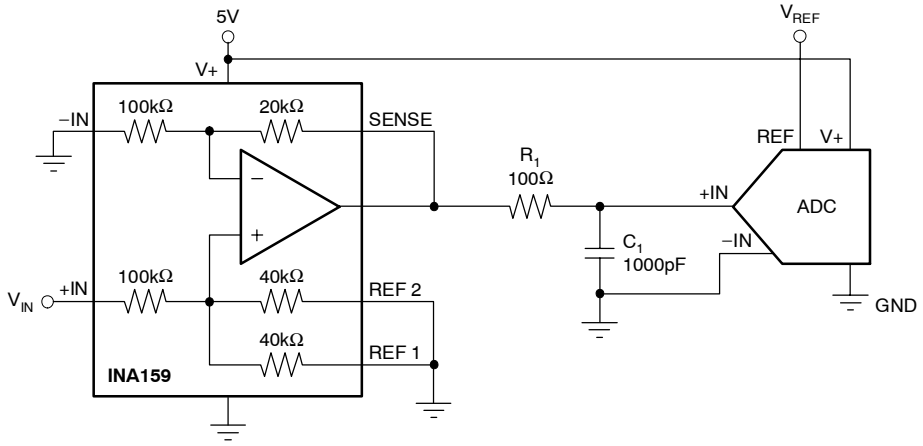

a) Unipolar, Noninverting, G = 0.2

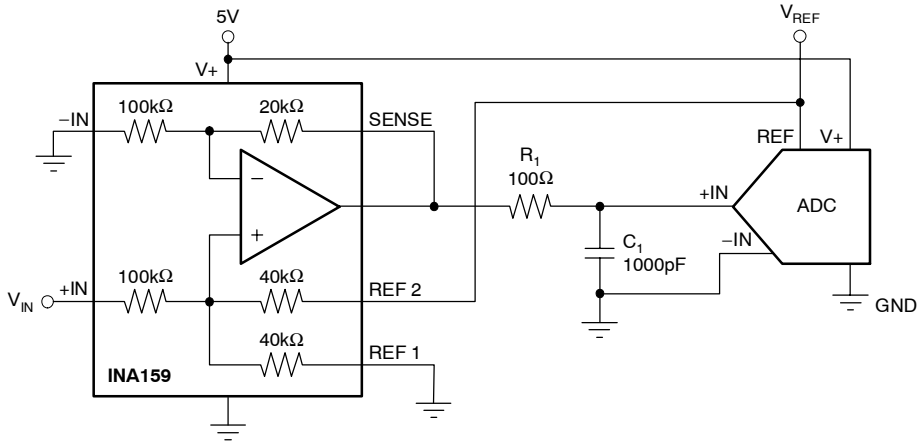

b) Bipolar, Noninverting, G = 0.2

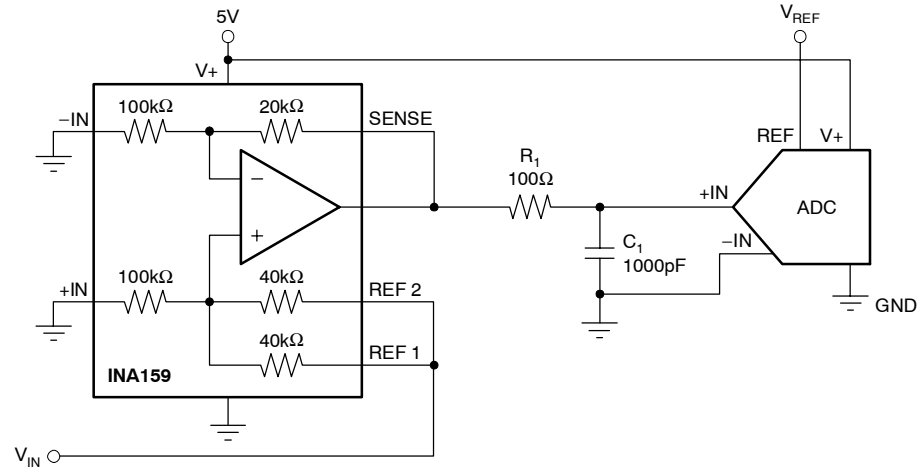

c) Unipolar, Unity Gain

Figure 5. Basic INA159 Configurations

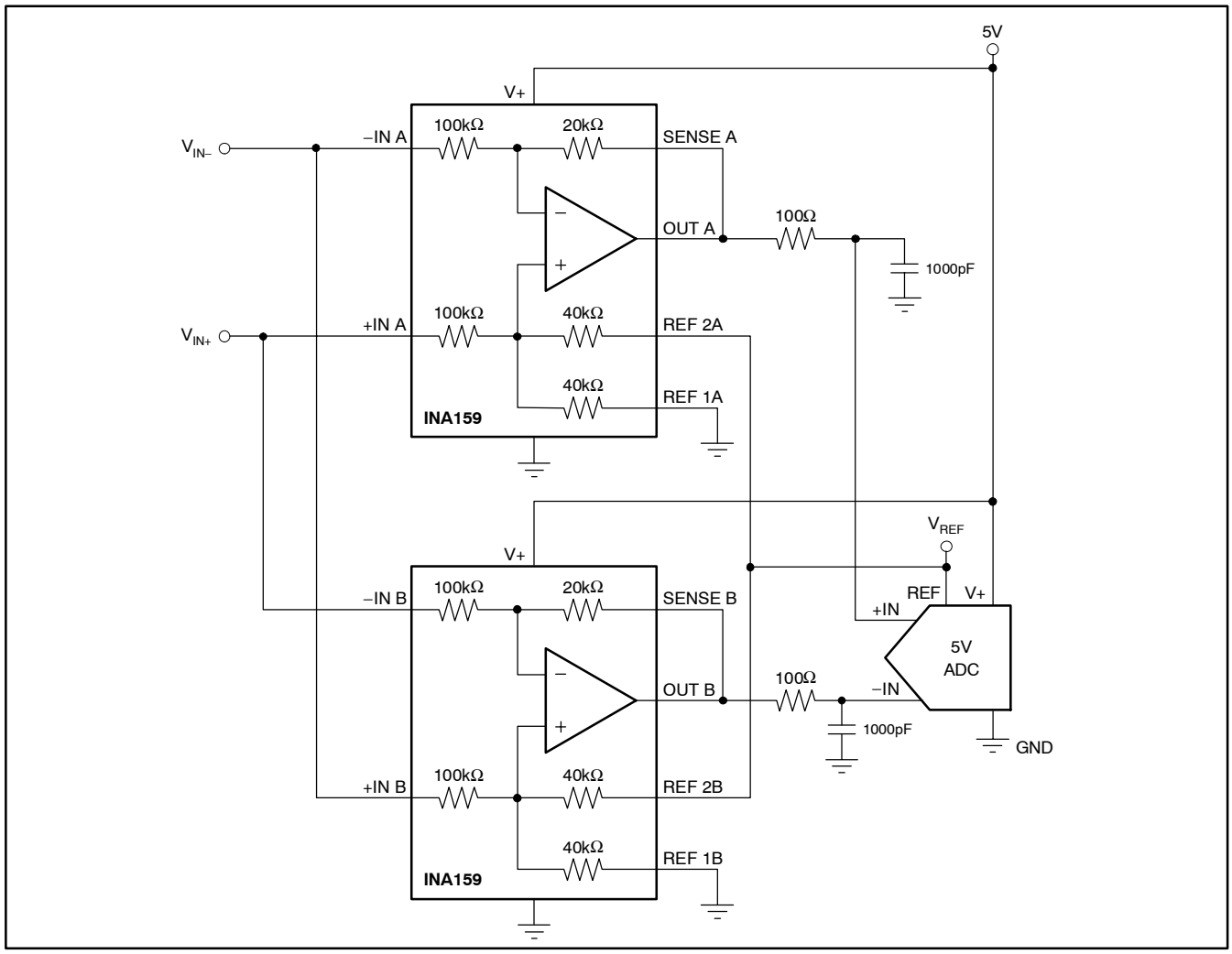

Figure 6. Differential ADC Drive

PACKAGING INFORMATION

Orderable part number	Status (1)	Material type (2)	Package | Pins	Package qty | Carrier	RoHS (3)	Lead finish/ Ball material (4)	MSL rating/ Peak reflow (5)	Op temp (°C)	Part marking (6)
INA159AIDGKR	Active	Production	VSSOP (DGK) | 8	2500 | LARGE T&R	Yes	NIPDAU | NIPDAUAG	Level-1-260C-UNLIM	-40 to 125	CJB
INA159AIDGKR.A	Active	Production	VSSOP (DGK) | 8	2500 | LARGE T&R	Yes	NIPDAU	Level-1-260C-UNLIM	-40 to 125	CJB
INA159AIDGKRG4	Active	Production	VSSOP (DGK) | 8	2500 | LARGE T&R	Yes	NIPDAU	Level-1-260C-UNLIM	-40 to 125	CJB
INA159AIDGKT	Active	Production	VSSOP (DGK) | 8	250 | SMALL T&R	Yes	Call TI | Nipdauag | Nipdau	Level-1-260C-UNLIM	-40 to 125	CJB
INA159AIDGKT.A	Active	Production	VSSOP (DGK) | 8	250 | SMALL T&R	Yes	Call TI	Level-1-260C-UNLIM	-40 to 125	CJB
INA159AIDGKTG4	Active	Production	VSSOP (DGK) | 8	250 | SMALL T&R	Yes	Call TI	Level-1-260C-UNLIM	-40 to 125	CJB

(1) **Status:** For more details on status, see our product life cycle.

(2) **Material type:** When designated, preproduction parts are prototypes/experimental devices, and are not yet approved or released for full production. Testing and final process, including without limitation quality assurance, reliability performance testing, and/or process qualification, may not yet be complete, and this item is subject to further changes or possible discontinuation. If available for ordering, purchases will be subject to an additional waiver at checkout, and are intended for early internal evaluation purposes only. These items are sold without warranties of any kind.

(3) **RoHS values:** Yes, No, RoHS Exempt. See the TI RoHS Statement for additional information and value definition.

(4) **Lead finish/Ball material:** Parts may have multiple material finish options. Finish options are separated by a vertical ruled line. Lead finish/Ball material values may wrap to two lines if the finish value exceeds the maximum column width.

(5) **MSL rating/Peak reflow:** The moisture sensitivity level ratings and peak solder (reflow) temperatures. In the event that a part has multiple moisture sensitivity ratings, only the lowest level per JEDEC standards is shown. Refer to the shipping label for the actual reflow temperature that will be used to mount the part to the printed circuit board.

(6) **Part marking:** There may be an additional marking, which relates to the logo, the lot trace code information, or the environmental category of the part.

Multiple part markings will be inside parentheses. Only one part marking contained in parentheses and separated by a "~" will appear on a part. If a line is indented then it is a continuation of the previous line and the two combined represent the entire part marking for that device.

Important Information and Disclaimer: The information provided on this page represents TI's knowledge and belief as of the date that it is provided. TI bases its knowledge and belief on information provided by third parties, and makes no representation or warranty as to the accuracy of such information. Efforts are underway to better integrate information from third parties. TI has taken and continues to take reasonable steps to provide representative and accurate information but may not have conducted destructive testing or chemical analysis on incoming materials and chemicals. TI and TI suppliers consider certain information to be proprietary, and thus CAS numbers and other limited information may not be available for release.

In no event shall TI's liability arising out of such information exceed the total purchase price of the TI part(s) at issue in this document sold by TI to Customer on an annual basis.

OTHER QUALIFIED VERSIONS OF INA159 :

- Enhanced Product : INA159-EP

NOTE: Qualified Version Definitions:

- Enhanced Product - Supports Defense, Aerospace and Medical Applications

TAPE AND REEL INFORMATION

REEL DIMENSIONS

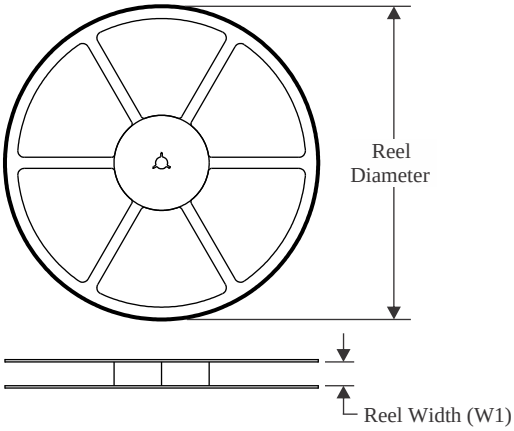

TAPE DIMENSIONS

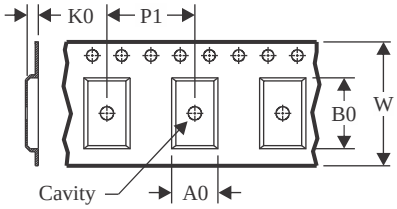

A0	Dimension designed to accommodate the component width
B0	Dimension designed to accommodate the component length
K0	Dimension designed to accommodate the component thickness
W	Overall width of the carrier tape
P1	Pitch between successive cavity centers

QUADRANT ASSIGNMENTS FOR PIN 1 ORIENTATION IN TAPE

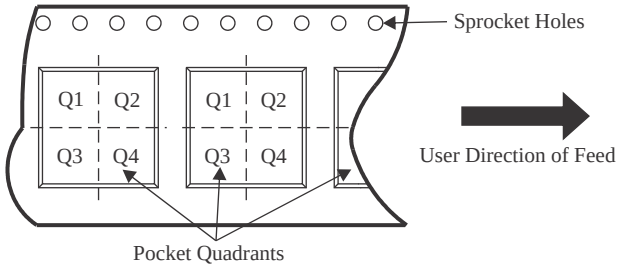

*All dimensions are nominal

Device	Package Type	Package Drawing	Pins	SPQ	Reel Diameter (mm)	Reel Width W1 (mm)	A0 (mm)	B0 (mm)	K0 (mm)	P1 (mm)	W (mm)	Pin1 Quadrant
INA159AIDGKR	VSSOP	DGK	8	2500	330.0	12.4	5.3	3.4	1.4	8.0	12.0	Q1
INA159AIDGKT	VSSOP	DGK	8	250	180.0	12.4	5.3	3.4	1.4	8.0	12.0	Q1

TAPE AND REEL BOX DIMENSIONS

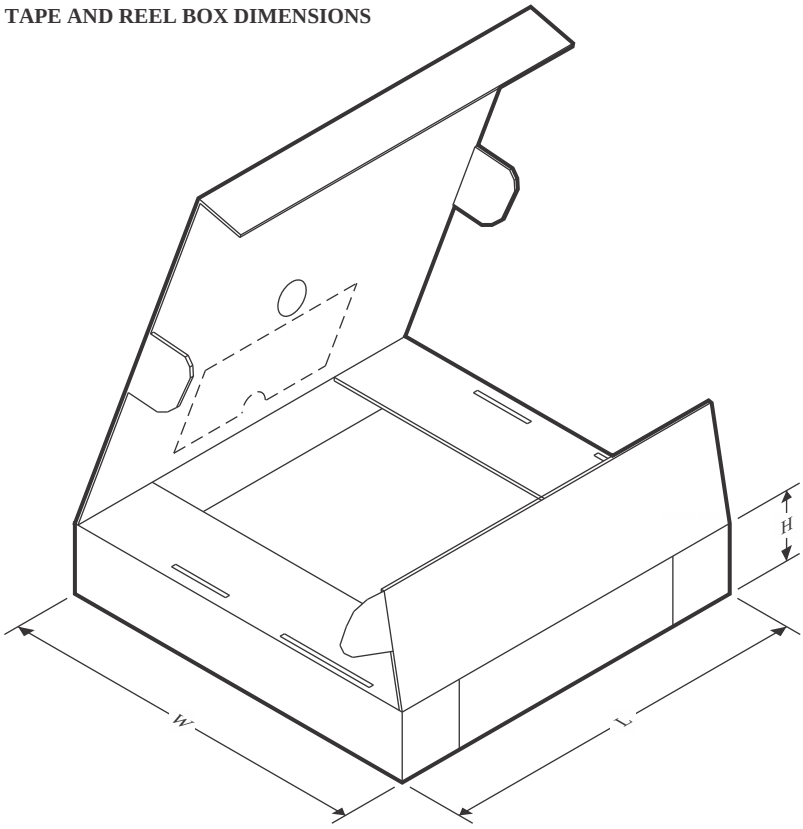

*All dimensions are nominal

Device	Package Type	Package Drawing	Pins	SPQ	Length (mm)	Width (mm)	Height (mm)
INA159AIDGKR	VSSOP	DGK	8	2500	353.0	353.0	32.0
INA159AIDGKT	VSSOP	DGK	8	250	213.0	191.0	35.0

PACKAGE OUTLINE

DGK0008A

VSSOP - 1.1 mm max height

SMALL OUTLINE PACKAGE

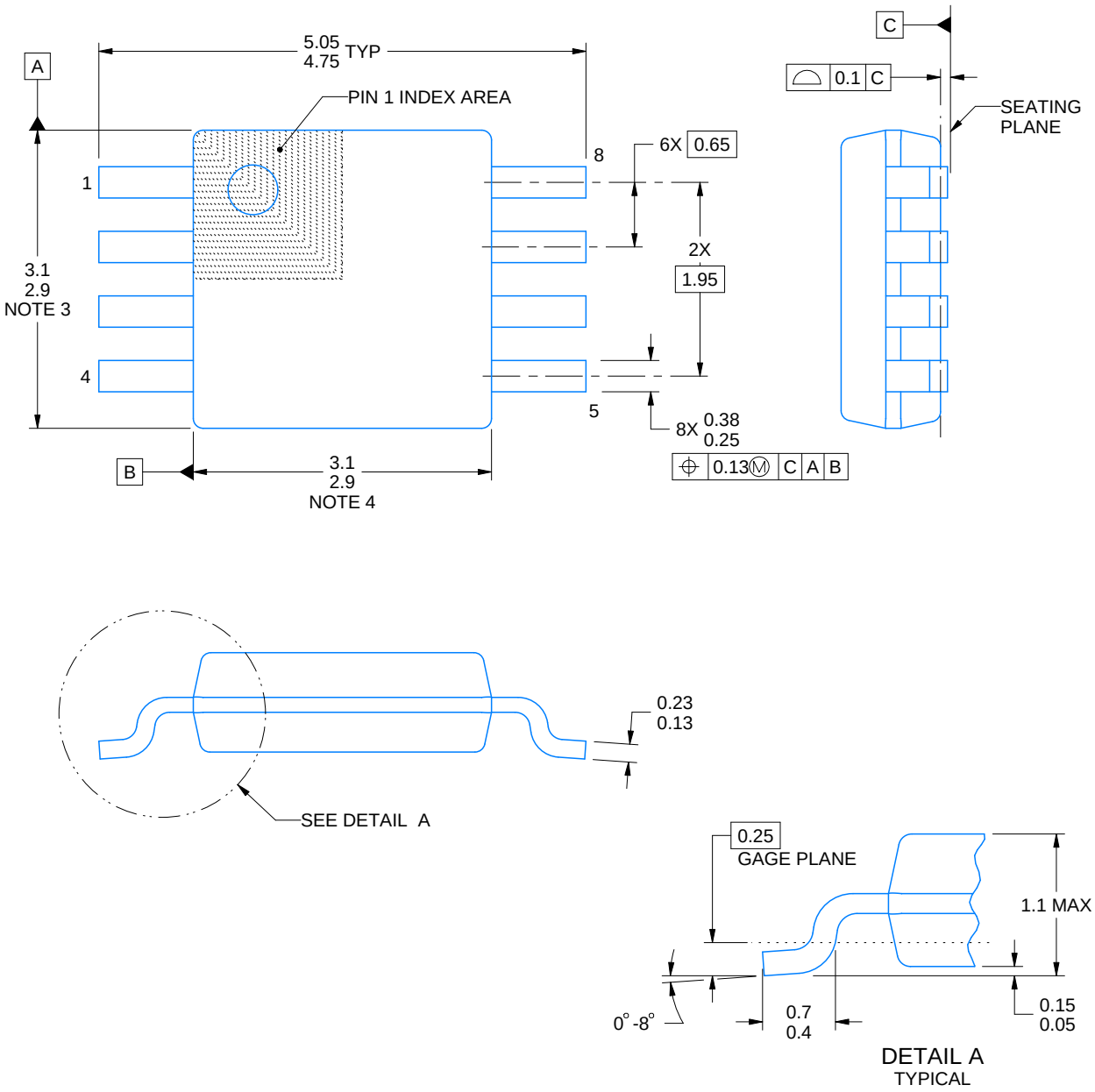

PowerPAD is a trademark of Texas Instruments.

NOTES:

1. All linear dimensions are in millimeters. Any dimensions in parenthesis are for reference only. Dimensioning and tolerancing per ASME Y14.5M.
2. This drawing is subject to change without notice.
3. This dimension does not include mold flash, protrusions, or gate burrs. Mold flash, protrusions, or gate burrs shall not exceed 0.15 mm per side.
4. This dimension does not include interlead flash. Interlead flash shall not exceed 0.25 mm per side.
5. Reference JEDEC registration MO-187.

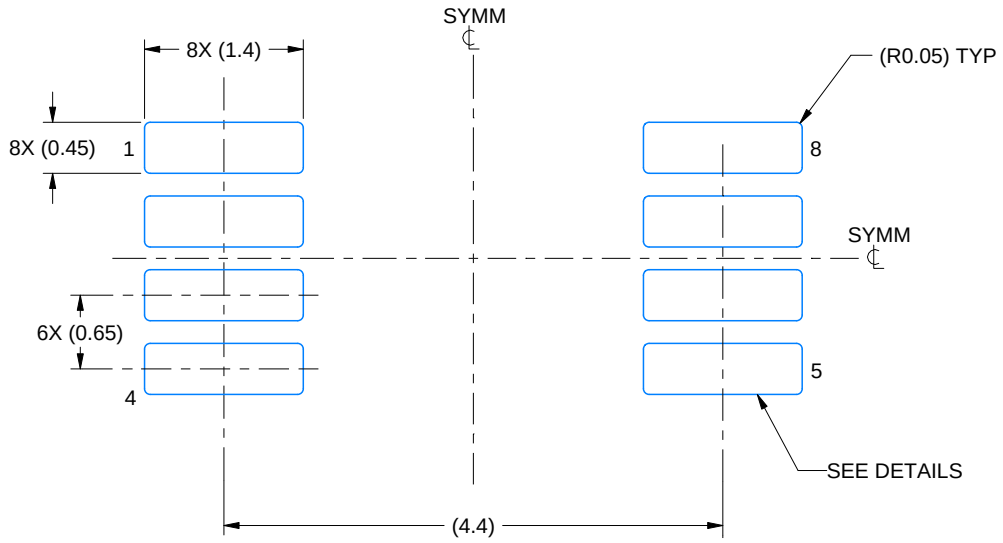

LAND PATTERN EXAMPLE
EXPOSED METAL SHOWN
SCALE: 15X

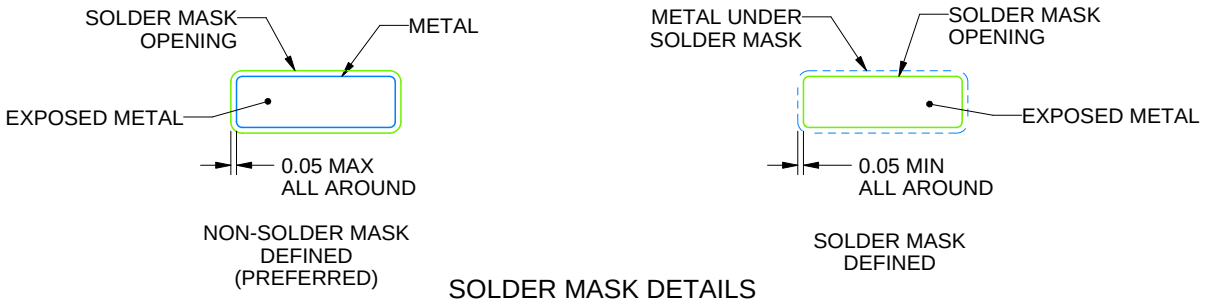

SOLDER MASK DETAILS

4214862/A 04/2023

NOTES: (continued)

6. Publication IPC-7351 may have alternate designs.
7. Solder mask tolerances between and around signal pads can vary based on board fabrication site.
8. Vias are optional depending on application, refer to device data sheet. If any vias are implemented, refer to their locations shown on this view. It is recommended that vias under paste be filled, plugged or tented.
9. Size of metal pad may vary due to creepage requirement.

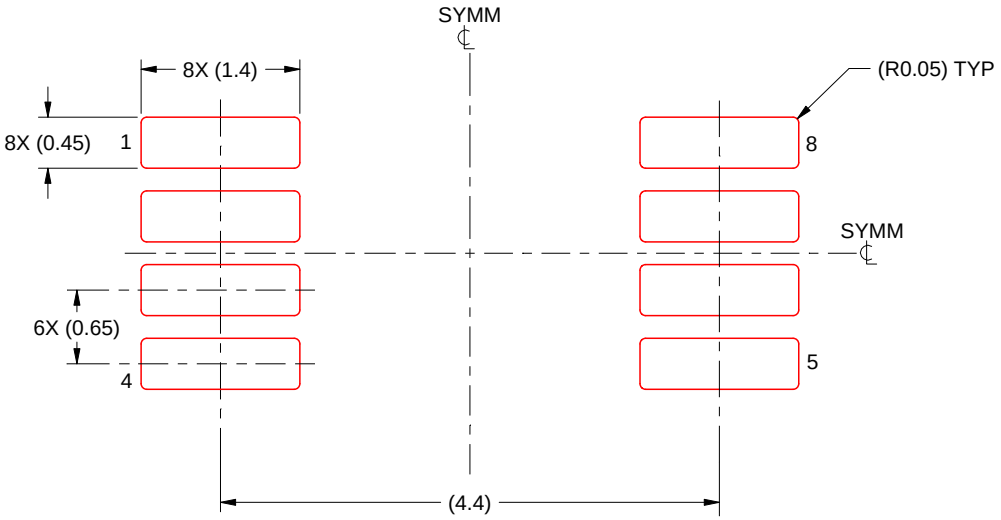

SOLDER PASTE EXAMPLE
SCALE: 15X

4214862/A 04/2023

NOTES: (continued)

11. Laser cutting apertures with trapezoidal walls and rounded corners may offer better paste release. IPC-7525 may have alternate design recommendations.
12. Board assembly site may have different recommendations for stencil design.

IMPORTANT NOTICE AND DISCLAIMER

TI PROVIDES TECHNICAL AND RELIABILITY DATA (INCLUDING DATASHEETS), DESIGN RESOURCES (INCLUDING REFERENCE DESIGNS), APPLICATION OR OTHER DESIGN ADVICE, WEB TOOLS, SAFETY INFORMATION, AND OTHER RESOURCES “AS IS” AND WITH ALL FAULTS, AND DISCLAIMS ALL WARRANTIES, EXPRESS AND IMPLIED, INCLUDING WITHOUT LIMITATION ANY IMPLIED WARRANTIES OF MERCHANTABILITY, FITNESS FOR A PARTICULAR PURPOSE OR NON-INFRINGEMENT OF THIRD PARTY INTELLECTUAL PROPERTY RIGHTS.

These resources are intended for skilled developers designing with TI products. You are solely responsible for (1) selecting the appropriate TI products for your application, (2) designing, validating and testing your application, and (3) ensuring your application meets applicable standards, and any other safety, security, regulatory or other requirements.

These resources are subject to change without notice. TI grants you permission to use these resources only for development of an application that uses the TI products described in the resource. Other reproduction and display of these resources is prohibited. No license is granted to any other TI intellectual property right or to any third party intellectual property right. TI disclaims responsibility for, and you fully indemnify TI and its representatives against any claims, damages, costs, losses, and liabilities arising out of your use of these resources.

TI’s products are provided subject to TI’s Terms of Sale, TI’s General Quality Guidelines, or other applicable terms available either on ti.com or provided in conjunction with such TI products. TI’s provision of these resources does not expand or otherwise alter TI’s applicable warranties or warranty disclaimers for TI products. Unless TI explicitly designates a product as custom or customer-specified, TI products are standard, catalog, general purpose devices.

TI objects to and rejects any additional or different terms you may propose.

Copyright © 2026, Texas Instruments Incorporated

Last updated 10/2025