SN54121, SN74121
MONOSTABLE MULTIVIBRATORS WITH SCHMITT-TRIGGER INPUTS

MAY 1983 – REVISED MARCH 1988

- Programmable Output Pulse Width
  With R_{int} . . . 35 ns Typ
  With R_{ext}/C_{ext} . . . 40 ns to 28 Seconds
- Internal Compensation for Virtual Temperature Independence
- Jitter-Free Operation up to 90% Duty Cycle
- Inhibit Capability

SN54121 . . . J OR W PACKAGE
SN74121 . . . N PACKAGE
(TOP VIEW)

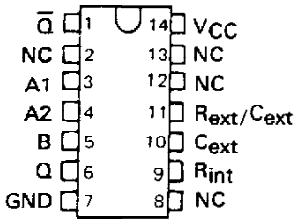

NC - No internal connection.

FUNCTION TABLE

INPUTS			OUTPUTS	
A1	A2	B	Q	Q̄
L	X	H	L	H
X	L	H	L†	H†
X	X	L	L†	H†
H	H	X	L†	H†
H	↓	H	⎍	⎍
↓	H	H	⎍	⎍
↓	↓	H	⎍	⎍
L	X	↑	⎍	⎍
X	L	↑	⎍	⎍

For explanation of function table symbols, see page

† These lines of the function table assume that the indicated steady-state conditions at the A and B inputs have been setup long enough to complete any pulse started before the setup.

logic symbol‡

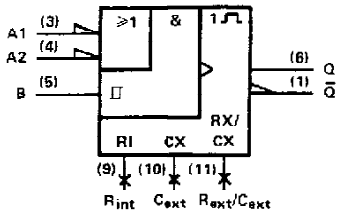

‡This symbol is in accordance with ANSI/IEEE Std 91-1984 and IEC Publication 617-12.

description

These multivibrators feature dual negative-transition-triggered inputs and a single positive-transition-triggered input which can be used as an inhibit input. Complementary output pulses are provided.

Pulse triggering occurs at a particular voltage level and is not directly related to the transition time of the input pulse. Schmitt-trigger input circuitry (TTL hysteresis) for the B input allows jitter-free triggering from inputs with transition rates as slow as 1 volt/second, providing the circuit with an excellent noise immunity of typically 1.2 volts. A high immunity to V_{CC} noise of typically 1.5 volts is also provided by internal latching circuitry.

Once fired, the outputs are independent of further transitions of the inputs and are a function only of the timing components. Input pulses may be of any duration relative to the output pulse. Output pulse length may be varied from 40 nanoseconds to 28 seconds by choosing appropriate timing components. With no external timing components (i.e., R_{int} connected to V_{CC}, C_{ext} and R_{ext}/C_{ext} open), an output pulse of typically 30 or 35 nanoseconds is achieved which may be used as a d-c triggered reset signal. Output rise and fall times are TTL compatible and independent of pulse length.

Pulse width stability is achieved through internal compensation and is virtually independent of V_{CC} and temperature. In most applications, pulse stability will only be limited by the accuracy of external timing components.

Jitter-free operation is maintained over the full temperature and V_{CC} ranges for more than six decades of timing capacitance (10 pF to 10 μF) and more than one decade of timing resistance (2 kΩ to 30 kΩ for the SN54121 and 2 kΩ to 40 kΩ for the SN74121). Throughout these ranges, pulse width is defined by the relationship $t_{w(out)} = C_{ext}R_T\ln 2 \approx 0.7\ C_{ext}R_T$. In circuits where pulse cutoff is not critical, timing capacitance up to 1000 μF and timing resistance as low as 1.4 kΩ may be used. Also, the range of jitter-free output pulse widths is extended if V_{CC} is held to 5 volts and free-air temperature is 25°C. Duty cycles as high as 90% are achieved when using maximum recommended R_T. Higher duty cycles are available if a certain amount of pulse-width jitter is allowed.

PRODUCTION DATA documents contain information current as of publication date. Products conform to specifications per the terms of Texas Instruments standard warranty. Production processing does not necessarily include testing of all parameters.

TEXAS INSTRUMENTS
POST OFFICE BOX 655012 • DALLAS, TEXAS 75265

logic diagram (positive logic)

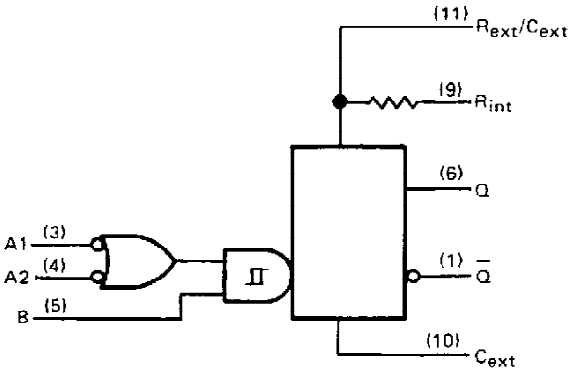

R_{int} = 2 kΩ NOM

Pin numbers shown on logic notation are for J or N packages.

NOTES: 1. An external capacitor may be connected between C_{ext} (positive) and R_{ext}/C_{ext}.
2. To use the internal timing resistor, connect R_{int} to V_{CC}. For improved pulse width accuracy and repeatability, connect an external resistor between R_{ext}/C_{ext} and V_{CC} with R_{int} open-circuited.

schematics of inputs and outputs

EQUIVALENT OF EACH INPUT

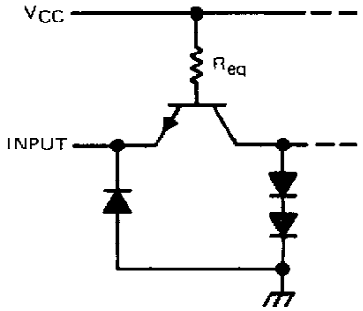

INPUT	R_{eq} NOM
A1	4 kΩ
A2	4 kΩ
B	2 kΩ

TYPICAL OF BOTH OUTPUTS

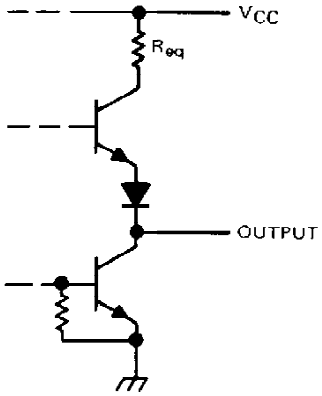

R_{eq} = 130 Ω NOM

absolute maximum ratings over operating free-air temperature range (unless otherwise noted)

Supply voltage, V_{CC} (see Note 3) . . . . . 7 V
Input voltage . . . . . 5.5 V
Operating free-air temperature range: SN54121 . . . . . −55°C to 125°C
SN74121 . . . . . 0°C to 70°C
Storage temperature range . . . . . −65°C to 150°C

NOTE 3: Voltage values are with respect to network ground terminal.

recommended operating conditions

				MIN	NOM	MAX	UNIT
V_{CC}	Supply voltage		54 Family	4.5	5	5.5	V
			74 Family	4.75	5	5.25	
I_{OH}	High-level output current					−0.4	mA
I_{OL}	Low-level output current					16	mA
dv/dt	Rate of rise or fall of input pulse	Schmitt input, B		1			V/s
		Logic inputs, A1, A2		1			V/μs
$t_{w(in)}$	Input pulse width			50			ns
R_{ext}	External timing capacitance		54 Family	1.4		30	kΩ
			74 Family	1.4		40	
C_{ext}	External timing capacitance			0		1000	μF
	Duty cycle	R_T = 2 kΩ				67	%
		R_T = MAX R_{ext}				90	
T_A	Operating free-air temperature		54 Family	−55		125	°C
			74 Family	0		70	

electrical characteristics over recommended operating free-air temperature range (unless otherwise noted)

PARAMETER		TEST CONDITONS†		MIN	TYP‡	MAX	UNIT
V_{IH}	High-level input voltage at B input	V_{CC} = MIN		2			V
V_{IL}	Low-level input voltage at A input	V_{CC} = MIN				0.8	V
V_{T+}	Positive-going threshold voltage at B input	V_{CC} = MIN			1.55	2	V
V_{T-}	Negative-going threshold voltage at B input	V_{CC} = MIN		0.8	1.35		V
V_{IK}	Input clamp voltage	V_{CC} = MIN,	I_I = −12 mA			−1.5	V
I_{OH}	High-level output voltage	V_{CC} = MIN,	I_{OH} = MAX	2.4	3.4		V
V_{OL}	Low-level output voltage	V_{CC} = MIN,	I_{OL} = MAX		0.2	0.4	V
I_I	Input current at maximum input voltage	V_{CC} = MAX,	V_I = 5.5 V			1	mA
I_{IH}	High-level input current	V_{CC} = MAX, V_I = 2.4 V	A1 or A2			40	μA
			B			80	
I_{IL}	Low-level input current	V_{CC} = MAX, V_I = 0.4 V	A1 or A2			−1.6	mA
			B			−3.2	
I_{OS}	Short-circuit output current§	V_{CC} = MAX	54 Family	−20		−55	mA
			74 Family	−18		−55	
I_{CC}	Supply current	V_{CC} = MAX	Quiescent		13	25	mA
			Triggered		23	40	

†For conditions shown as MIN or MAX, use the appropriate value specified under recommended operating conditions.
‡All typical values are at V_{CC} = 5 V, T_A = 25°C.
†Not more than one output should be shorted at a time.

switching characteristics, V_{CC} = 5 V, T_A = 25°C

PARAMETER		TEST CONDITIONS		MIN	TYP	MAX	UNIT
t_{PLH}	Propagation delay time, low-to-high-level Q output from either A input	C_L = 15 pF, R_L = 400 Ω, See Note 4	C_{ext} = 80 pF, R_{int} to V_{CC}		45	70	ns
t_{PLH}	Propagation delay time, low-to-high-level Q output from B input				35	55	ns
t_{PHL}	Propagation delay time, high-to-low level $\overline{Q}$ output from either A input				50	80	ns
t_{PHL}	Propagation delay time, high-to-low level $\overline{Q}$ output from B input				40	65	ns
$t_{w(out)}$	Pulse width obtained using internal timing resistor		C_{ext} = 80 pF, R_{int} to V_{CC}	70	110	150	ns
$t_{w(out)}$	Pulse width obtained with zero timing capacitance		C_{ext} = 0, R_{int} to V_{CC}		30	50	ns
$t_{w(out)}$	Pulse width obtained using external timing resistor		C_{ext} = 100 pF, R_T = 10 kΩ	600	700	800	ns
			C_{ext} = 1 μF, R_T = 10 kΩ	6	7	8	ms

NOTE 4: Load circuits and voltage waveforms are shown in Section 1.

TYPICAL CHARACTERISTICS†

DISTRIBUTION OF UNITS
for
OUTPUT PULSE WIDTH

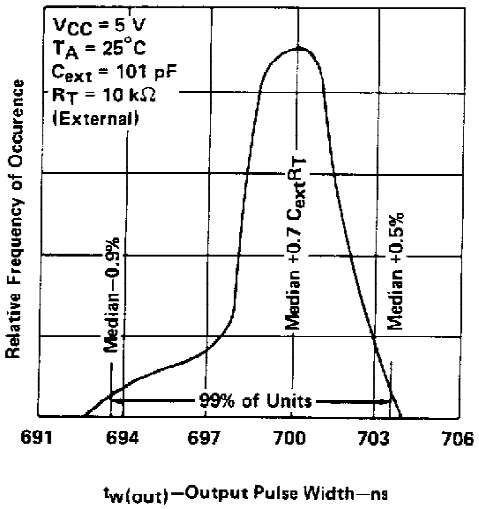

FIGURE 1

VARIATION IN INTERNAL TIMING RESISTOR VALUE
vs
FREE-AIR TEMPERATURE

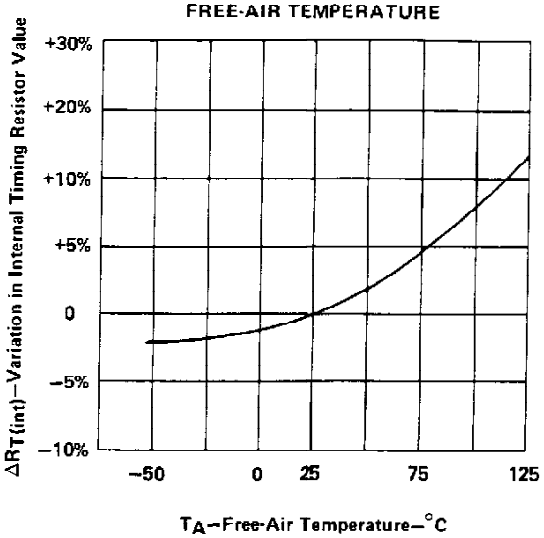

FIGURE 2

VARIATION IN OUTPUT PULSE WIDTH
vs
SUPPLY VOLTAGE

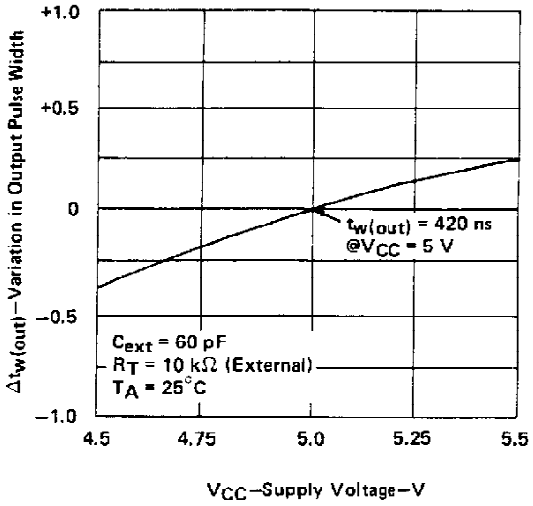

FIGURE 3

SCHMITT TRIGGER THRESHOLD VOLTAGE
vs
FREE-AIR TEMPERATURE

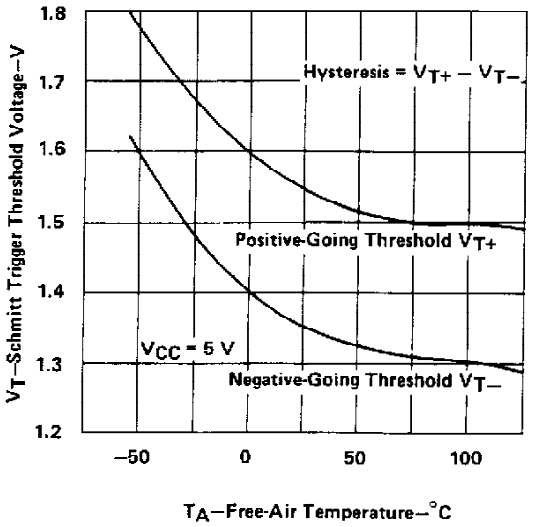

FIGURE 4

†Data for temperatures below 0°C and above 70°C are applicable for SN54121.

TYPICAL CHARACTERISTICS† (continued)

VARIATION IN OUTPUT PULSE WIDTH
vs
FREE-AIR TEMPERATURE

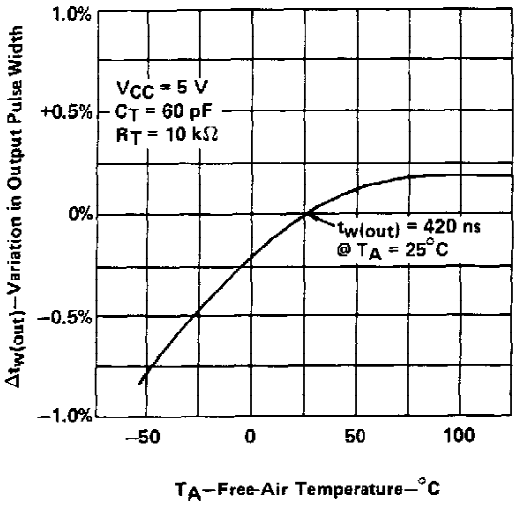

FIGURE 5

OUTPUT PULSE WIDTH
vs
TIMING RESISTOR VALUE

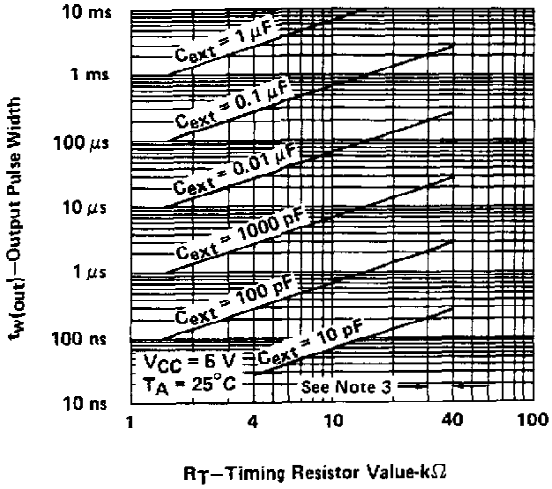

FIGURE 6

OUTPUT PULSE WIDTH
vs
EXTERNAL CAPACITANCE

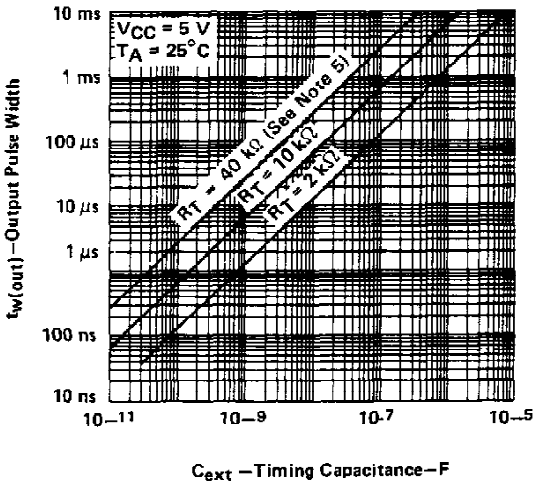

FIGURE 7

NOTE 5: These values of resistance exceed the maximum recommended use over the full temperature range of the SN54121.
†Data for temperatures below 0°C and above 70°C are applicable for SN54121.

IMPORTANT NOTICE

Texas Instruments (TI) reserves the right to make changes to its products or to discontinue any semiconductor product or service without notice, and advises its customers to obtain the latest version of relevant information to verify, before placing orders, that the information being relied on is current.

TI warrants performance of its semiconductor products and related software to the specifications applicable at the time of sale in accordance with TI's standard warranty. Testing and other quality control techniques are utilized to the extent TI deems necessary to support this warranty. Specific testing of all parameters of each device is not necessarily performed, except those mandated by government requirements.

Certain applications using semiconductor products may involve potential risks of death, personal injury, or severe property or environmental damage ("Critical Applications").

TI SEMICONDUCTOR PRODUCTS ARE NOT DESIGNED, INTENDED, AUTHORIZED, OR WARRANTED TO BE SUITABLE FOR USE IN LIFE-SUPPORT APPLICATIONS, DEVICES OR SYSTEMS OR OTHER CRITICAL APPLICATIONS.

Inclusion of TI products in such applications is understood to be fully at the risk of the customer. Use of TI products in such applications requires the written approval of an appropriate TI officer. Questions concerning potential risk applications should be directed to TI through a local SC sales office.

In order to minimize risks associated with the customer's applications, adequate design and operating safeguards should be provided by the customer to minimize inherent or procedural hazards.

TI assumes no liability for applications assistance, customer product design, software performance, or infringement of patents or services described herein. Nor does TI warrant or represent that any license, either express or implied, is granted under any patent right, copyright, mask work right, or other intellectual property right of TI covering or relating to any combination, machine, or process in which such semiconductor products or services might be or are used.

Copyright © 1996, Texas Instruments Incorporated

PACKAGING INFORMATION

Orderable Device	Status [1]	Package Type	Package Drawing	Pins	Package Qty	Eco Plan [2]	Lead/Ball Finish	MSL Peak Temp [3]
5962-9755301QCA	ACTIVE	CDIP	J	14	1	TBD	Call TI	Level-NC-NC-NC
5962-9755301QDA	ACTIVE	CFP	W	14	1	TBD	Call TI	Level-NC-NC-NC
5962-9755301QDA	ACTIVE	CFP	W	14	1	TBD	Call TI	Level-NC-NC-NC
SN54121J	ACTIVE	CDIP	J	14	1	TBD	Call TI	Level-NC-NC-NC
SN54121J	ACTIVE	CDIP	J	14	1	TBD	Call TI	Level-NC-NC-NC
SN74121D	ACTIVE	SOIC	D	14	50	Pb-Free (RoHS)	CU NIPDAU	Level-2-260C-1 YEAR/ Level-1-235C-UNLIM
SN74121D	ACTIVE	SOIC	D	14	50	Pb-Free (RoHS)	CU NIPDAU	Level-2-260C-1 YEAR/ Level-1-235C-UNLIM
SN74121DR	ACTIVE	SOIC	D	14	2500	Pb-Free (RoHS)	CU NIPDAU	Level-2-260C-1 YEAR/ Level-1-235C-UNLIM
SN74121DR	ACTIVE	SOIC	D	14	2500	Pb-Free (RoHS)	CU NIPDAU	Level-2-260C-1 YEAR/ Level-1-235C-UNLIM
SN74121N	ACTIVE	PDIP	N	14	25	Pb-Free (RoHS)	CU NIPDAU	Level-NC-NC-NC
SN74121N	ACTIVE	PDIP	N	14	25	Pb-Free (RoHS)	CU NIPDAU	Level-NC-NC-NC
SN74121N3	OBSOLETE	PDIP	N	14		TBD	Call TI	Call TI
SN74121N3	OBSOLETE	PDIP	N	14		TBD	Call TI	Call TI
SN74121NSR	ACTIVE	SO	NS	14	2000	Pb-Free (RoHS)	CU NIPDAU	Level-2-260C-1 YEAR/ Level-1-235C-UNLIM
SN74121NSR	ACTIVE	SO	NS	14	2000	Pb-Free (RoHS)	CU NIPDAU	Level-2-260C-1 YEAR/ Level-1-235C-UNLIM
SNJ54121J	ACTIVE	CDIP	J	14	1	TBD	Call TI	Level-NC-NC-NC
SNJ54121J	ACTIVE	CDIP	J	14	1	TBD	Call TI	Level-NC-NC-NC
SNJ54121W	ACTIVE	CFP	W	14	1	TBD	Call TI	Level-NC-NC-NC
SNJ54121W	ACTIVE	CFP	W	14	1	TBD	Call TI	Level-NC-NC-NC
SNJ54121WA	ACTIVE	CFP	WA	14	1	TBD	Call TI	Level-NC-NC-NC
SNJ54121WA	ACTIVE	CFP	WA	14	1	TBD	Call TI	Level-NC-NC-NC

[1] The marketing status values are defined as follows:
ACTIVE: Product device recommended for new designs.
LIFEBUY: TI has announced that the device will be discontinued, and a lifetime-buy period is in effect.
NRND: Not recommended for new designs. Device is in production to support existing customers, but TI does not recommend using this part in a new design.
PREVIEW: Device has been announced but is not in production. Samples may or may not be available.
OBSOLETE: TI has discontinued the production of the device.

[2] Eco Plan - The planned eco-friendly classification: Pb-Free (RoHS) or Green (RoHS & no Sb/Br) - please check http://www.ti.com/productcontent for the latest availability information and additional product content details.
TBD: The Pb-Free/Green conversion plan has not been defined.
Pb-Free (RoHS): TI's terms "Lead-Free" or "Pb-Free" mean semiconductor products that are compatible with the current RoHS requirements for all 6 substances, including the requirement that lead not exceed 0.1% by weight in homogeneous materials. Where designed to be soldered at high temperatures, TI Pb-Free products are suitable for use in specified lead-free processes.
Green (RoHS & no Sb/Br): TI defines "Green" to mean Pb-Free (RoHS compatible), and free of Bromine (Br) and Antimony (Sb) based flame retardants (Br or Sb do not exceed 0.1% by weight in homogeneous material)

[3] MSL, Peak Temp. -- The Moisture Sensitivity Level rating according to the JEDEC industry standard classifications, and peak solder temperature.

Important Information and Disclaimer: The information provided on this page represents TI's knowledge and belief as of the date that it is provided. TI bases its knowledge and belief on information provided by third parties, and makes no representation or warranty as to the accuracy of such information. Efforts are underway to better integrate information from third parties. TI has taken and continues to take reasonable steps to provide representative and accurate information but may not have conducted destructive testing or chemical analysis on incoming materials and chemicals. TI and TI suppliers consider certain information to be proprietary, and thus CAS numbers and other limited information may not be available for release.

In no event shall TI's liability arising out of such information exceed the total purchase price of the TI part(s) at issue in this document sold by TI to Customer on an annual basis.

J (R–GDIP–T**) CERAMIC DUAL IN–LINE PACKAGE

14 LEADS SHOWN

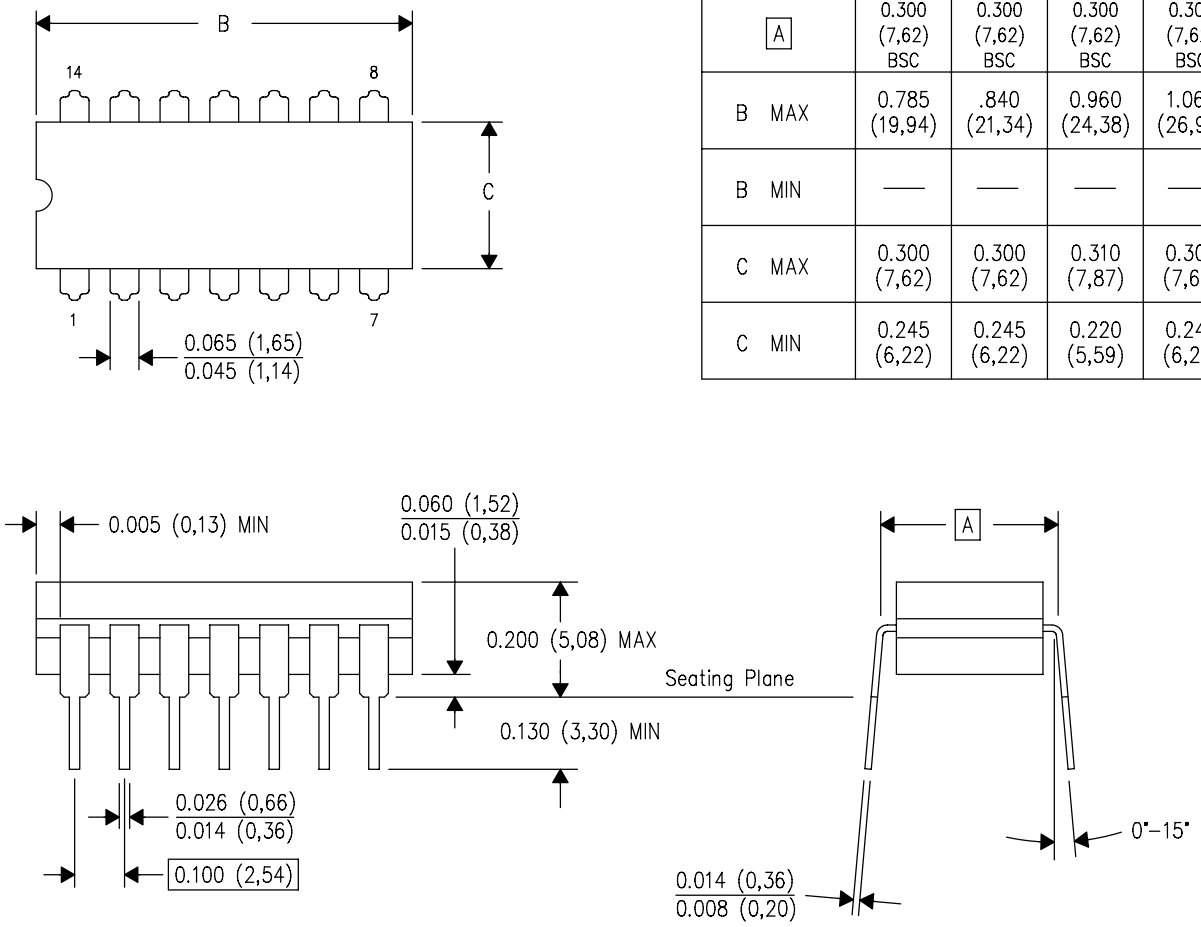

DIM \ PINS **	14	16	18	20
A	0.300 (7,62) BSC	0.300 (7,62) BSC	0.300 (7,62) BSC	0.300 (7,62) BSC
B MAX	0.785 (19,94)	.840 (21,34)	0.960 (24,38)	1.060 (26,92)
B MIN	—	—	—	—
C MAX	0.300 (7,62)	0.300 (7,62)	0.310 (7,87)	0.300 (7,62)
C MIN	0.245 (6,22)	0.245 (6,22)	0.220 (5,59)	0.245 (6,22)

4040083/F 03/03

NOTES:
- A. All linear dimensions are in inches (millimeters).
- B. This drawing is subject to change without notice.
- C. This package is hermetically sealed with a ceramic lid using glass frit.
- D. Index point is provided on cap for terminal identification only on press ceramic glass frit seal only.
- E. Falls within MIL STD 1835 GDIP1–T14, GDIP1–T16, GDIP1–T18 and GDIP1–T20.

W (R–GDFP–F14) CERAMIC DUAL FLATPACK

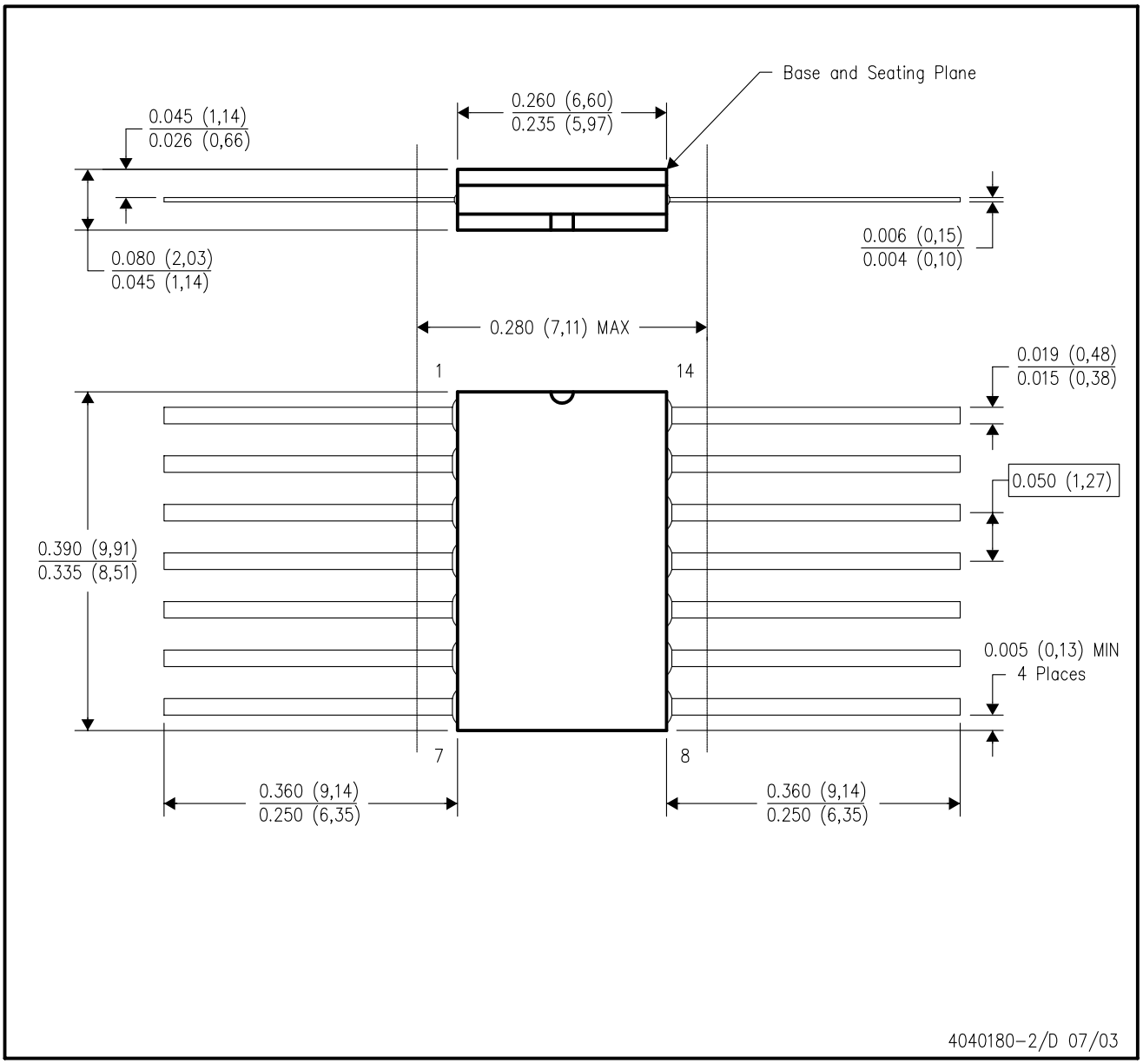

NOTES:
A. All linear dimensions are in inches (millimeters).
B. This drawing is subject to change without notice.
C. This package can be hermetically sealed with a ceramic lid using glass frit.
D. Index point is provided on cap for terminal identification only.
E. Falls within MIL STD 1835 GDFP1–F14 and JEDEC MO–092AB

N (R–PDIP–T**) PLASTIC DUAL–IN–LINE PACKAGE

16 PINS SHOWN

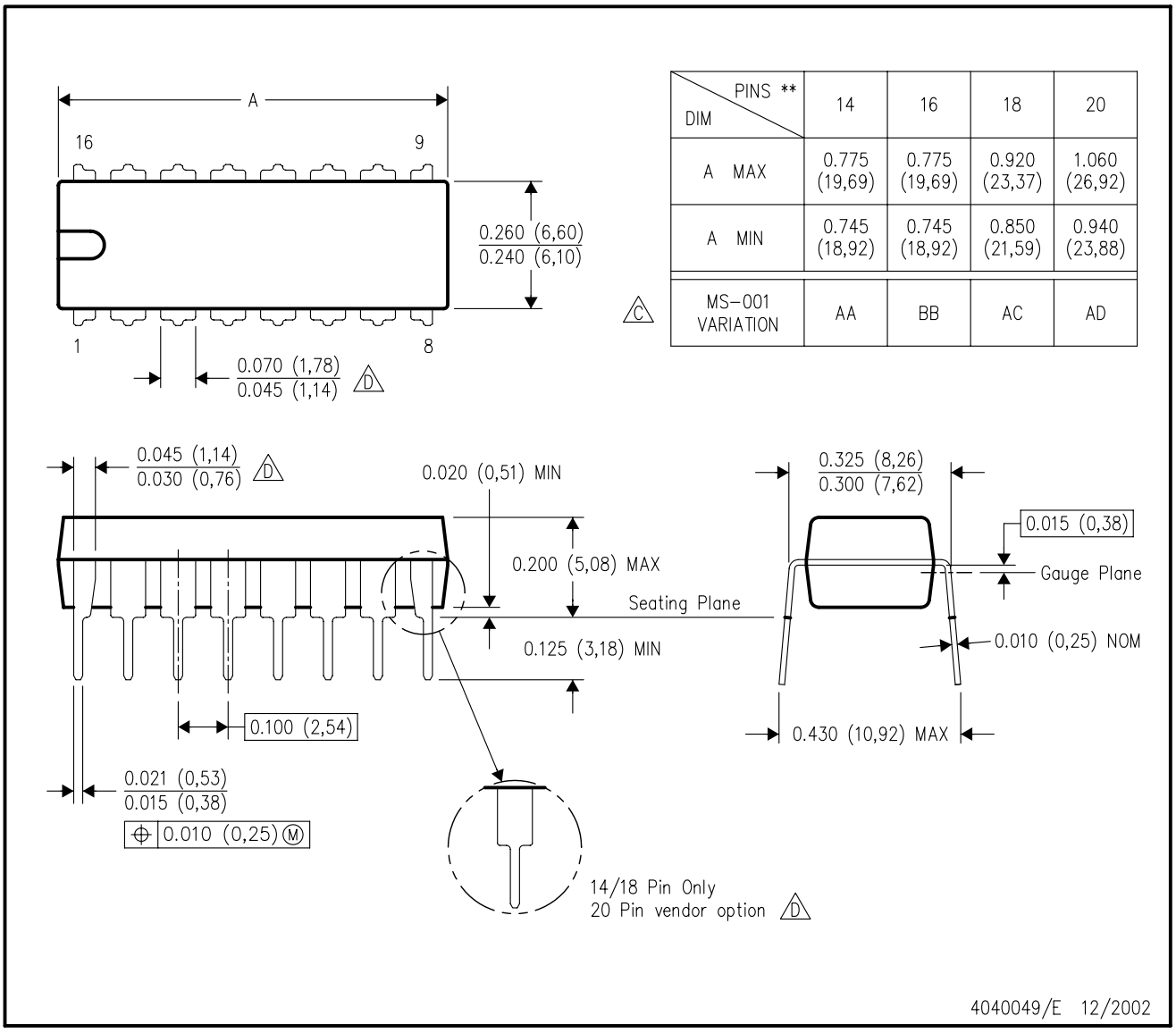

DIM \ PINS **	14	16	18	20
A MAX	0.775 (19,69)	0.775 (19,69)	0.920 (23,37)	1.060 (26,92)
A MIN	0.745 (18,92)	0.745 (18,92)	0.850 (21,59)	0.940 (23,88)
MS–001 VARIATION (C)	AA	BB	AC	AD

NOTES:
A. All linear dimensions are in inches (millimeters).
B. This drawing is subject to change without notice.
C. Falls within JEDEC MS–001, except 18 and 20 pin minimum body length (Dim A).
D. The 20 pin end lead shoulder width is a vendor option, either half or full width.

D (R–PDSO–G14) PLASTIC SMALL–OUTLINE PACKAGE

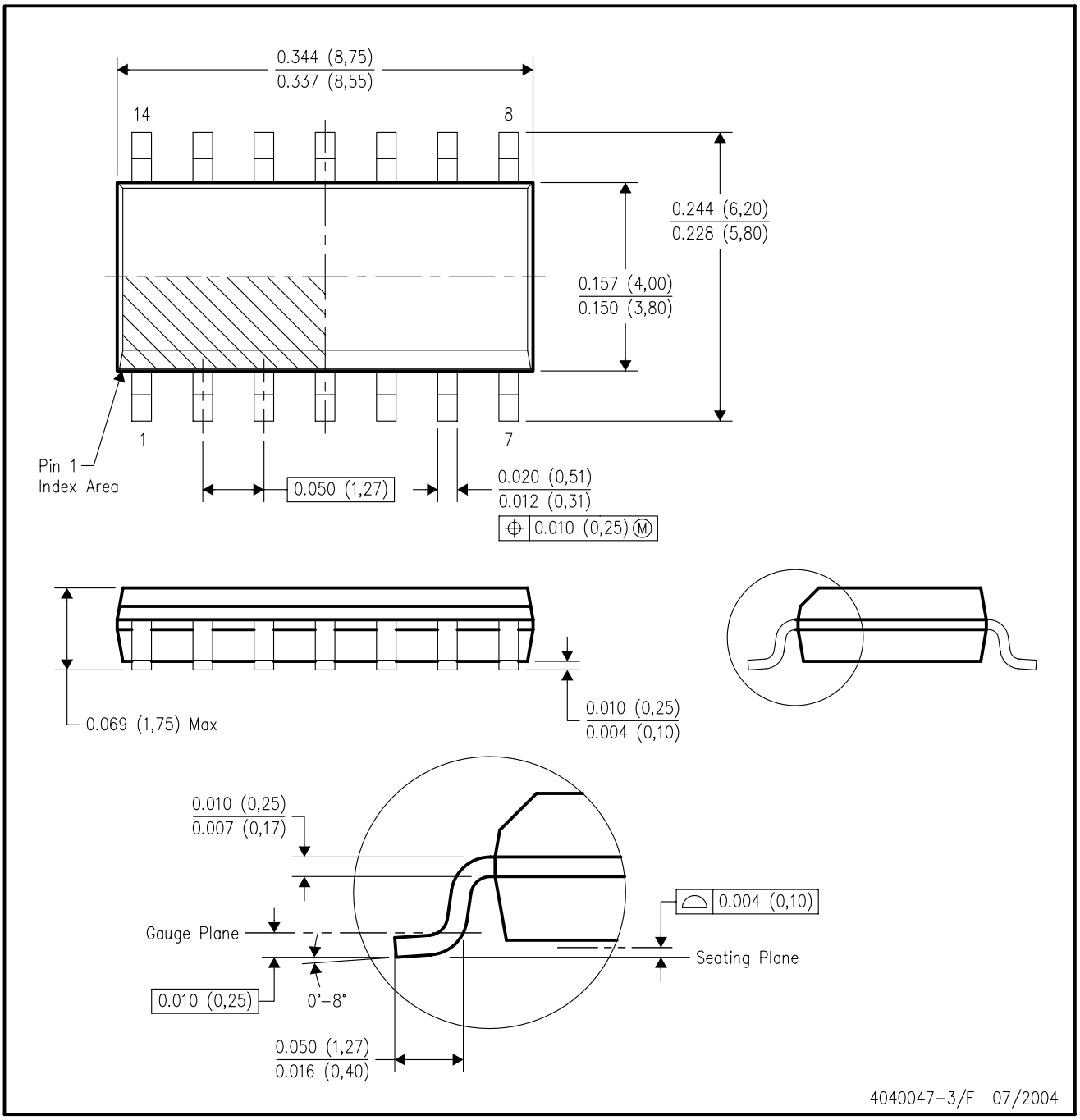

NOTES:
A. All linear dimensions are in inches (millimeters).
B. This drawing is subject to change without notice.
C. Body dimensions do not include mold flash or protrusion not to exceed 0.006 (0,15).
D. Falls within JEDEC MS–012 variation AB.

MECHANICAL DATA

NS (R-PDSO-G)** **PLASTIC SMALL-OUTLINE PACKAGE**

14-PINS SHOWN

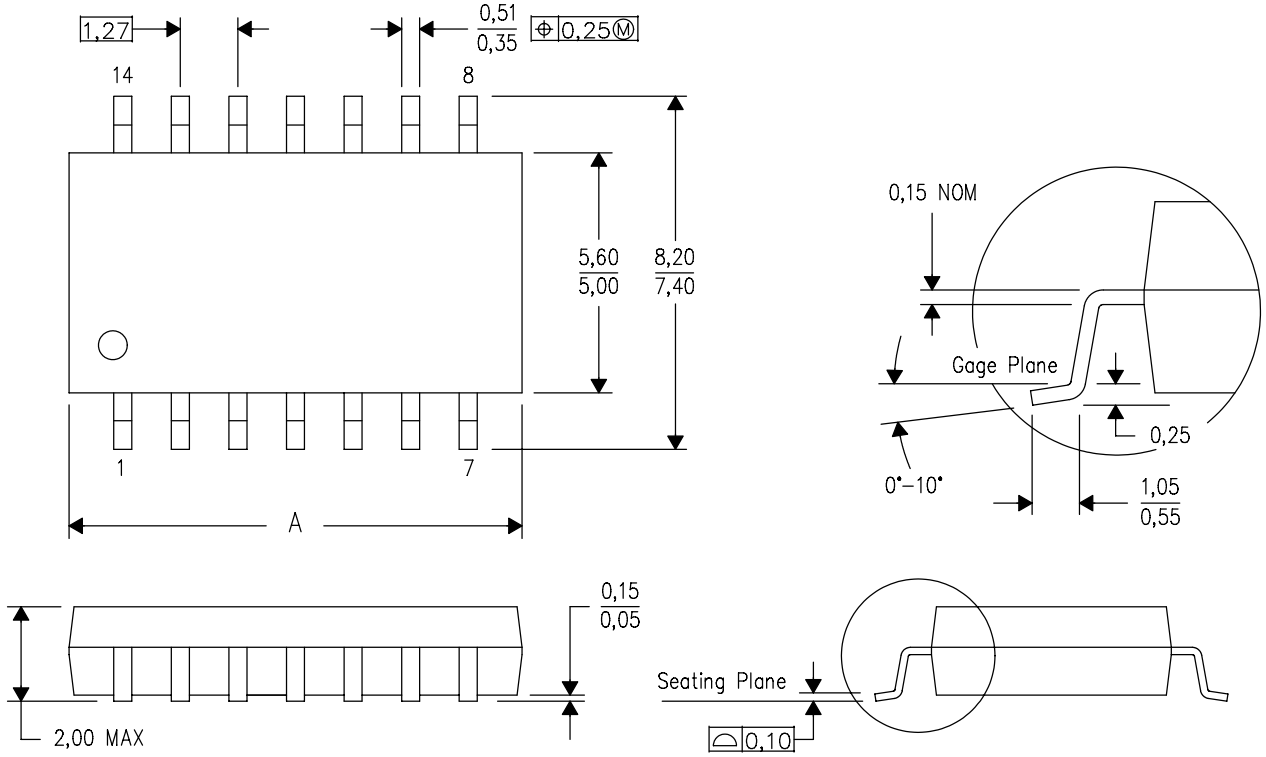

DIM \ PINS **	14	16	20	24
A MAX	10,50	10,50	12,90	15,30
A MIN	9,90	9,90	12,30	14,70

4040062/C 03/03

NOTES:
A. All linear dimensions are in millimeters.
B. This drawing is subject to change without notice.
C. Body dimensions do not include mold flash or protrusion, not to exceed 0,15.

PACKAGING INFORMATION

Orderable Device	Status (1)	Package Type	Package Drawing	Pins	Package Qty	Eco Plan (2)	Lead finish/ Ball material (6)	MSL Peak Temp (3)	Op Temp (°C)	Device Marking (4/5)	Samples
5962-9755301QCA	ACTIVE	CDIP	J	14	25	Non-RoHS & Green	SNPB	N / A for Pkg Type	-55 to 125	5962-9755301QCA SNJ54121J	Samples
5962-9755301QDA	ACTIVE	CFP	W	14	25	Non-RoHS & Green	SNPB	N / A for Pkg Type	-55 to 125	5962-9755301QDA SNJ54121W	Samples
SN54121J	ACTIVE	CDIP	J	14	25	Non-RoHS & Green	SNPB	N / A for Pkg Type	-55 to 125	SN54121J	Samples
SN74121D	ACTIVE	SOIC	D	14	50	RoHS & Green	NIPDAU	Level-1-260C-UNLIM	0 to 70	74121	Samples
SN74121DE4	ACTIVE	SOIC	D	14	50	RoHS & Green	NIPDAU	Level-1-260C-UNLIM	0 to 70	74121	Samples
SN74121N	ACTIVE	PDIP	N	14	25	RoHS & Green	NIPDAU	N / A for Pkg Type	0 to 70	SN74121N	Samples
SNJ54121J	ACTIVE	CDIP	J	14	25	Non-RoHS & Green	SNPB	N / A for Pkg Type	-55 to 125	5962-9755301QCA SNJ54121J	Samples
SNJ54121W	ACTIVE	CFP	W	14	25	Non-RoHS & Green	SNPB	N / A for Pkg Type	-55 to 125	5962-9755301QDA SNJ54121W	Samples

(1) The marketing status values are defined as follows:
ACTIVE: Product device recommended for new designs.
LIFEBUY: TI has announced that the device will be discontinued, and a lifetime-buy period is in effect.
NRND: Not recommended for new designs. Device is in production to support existing customers, but TI does not recommend using this part in a new design.
PREVIEW: Device has been announced but is not in production. Samples may or may not be available.
OBSOLETE: TI has discontinued the production of the device.

(2) **RoHS:** TI defines "RoHS" to mean semiconductor products that are compliant with the current EU RoHS requirements for all 10 RoHS substances, including the requirement that RoHS substance do not exceed 0.1% by weight in homogeneous materials. Where designed to be soldered at high temperatures, "RoHS" products are suitable for use in specified lead-free processes. TI may reference these types of products as "Pb-Free".
RoHS Exempt: TI defines "RoHS Exempt" to mean products that contain lead but are compliant with EU RoHS pursuant to a specific EU RoHS exemption.
Green: TI defines "Green" to mean the content of Chlorine (Cl) and Bromine (Br) based flame retardants meet JS709B low halogen requirements of <=1000ppm threshold. Antimony trioxide based flame retardants must also meet the <=1000ppm threshold requirement.

(3) MSL, Peak Temp. - The Moisture Sensitivity Level rating according to the JEDEC industry standard classifications, and peak solder temperature.

(4) There may be additional marking, which relates to the logo, the lot trace code information, or the environmental category on the device.

(5) Multiple Device Markings will be inside parentheses. Only one Device Marking contained in parentheses and separated by a "~" will appear on a device. If a line is indented then it is a continuation of the previous line and the two combined represent the entire Device Marking for that device.

(6) Lead finish/Ball material - Orderable Devices may have multiple material finish options. Finish options are separated by a vertical ruled line. Lead finish/Ball material values may wrap to two lines if the finish value exceeds the maximum column width.

Important Information and Disclaimer: The information provided on this page represents TI's knowledge and belief as of the date that it is provided. TI bases its knowledge and belief on information provided by third parties, and makes no representation or warranty as to the accuracy of such information. Efforts are underway to better integrate information from third parties. TI has taken and continues to take reasonable steps to provide representative and accurate information but may not have conducted destructive testing or chemical analysis on incoming materials and chemicals. TI and TI suppliers consider certain information to be proprietary, and thus CAS numbers and other limited information may not be available for release.

In no event shall TI's liability arising out of such information exceed the total purchase price of the TI part(s) at issue in this document sold by TI to Customer on an annual basis.

OTHER QUALIFIED VERSIONS OF SN54121, SN74121 :

- Catalog : SN74121
- Military : SN54121

NOTE: Qualified Version Definitions:

- Catalog - TI's standard catalog product
- Military - QML certified for Military and Defense Applications

TUBE

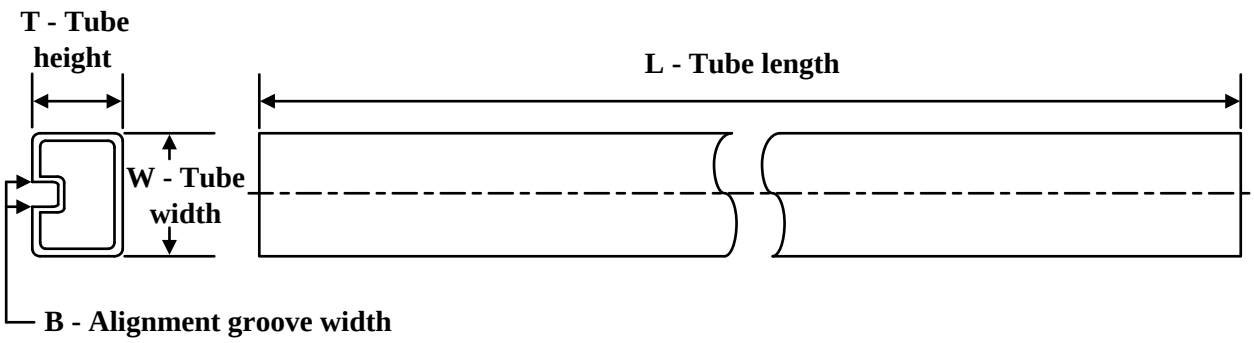

*All dimensions are nominal

Device	Package Name	Package Type	Pins	SPQ	L (mm)	W (mm)	T (µm)	B (mm)
5962-9755301QDA	W	CFP	14	25	506.98	26.16	6220	NA
SN74121D	D	SOIC	14	50	506.6	8	3940	4.32
SN74121DE4	D	SOIC	14	50	506.6	8	3940	4.32
SN74121N	N	PDIP	14	25	506	13.97	11230	4.32
SN74121N	N	PDIP	14	25	506	13.97	11230	4.32
SNJ54121W	W	CFP	14	25	506.98	26.16	6220	NA

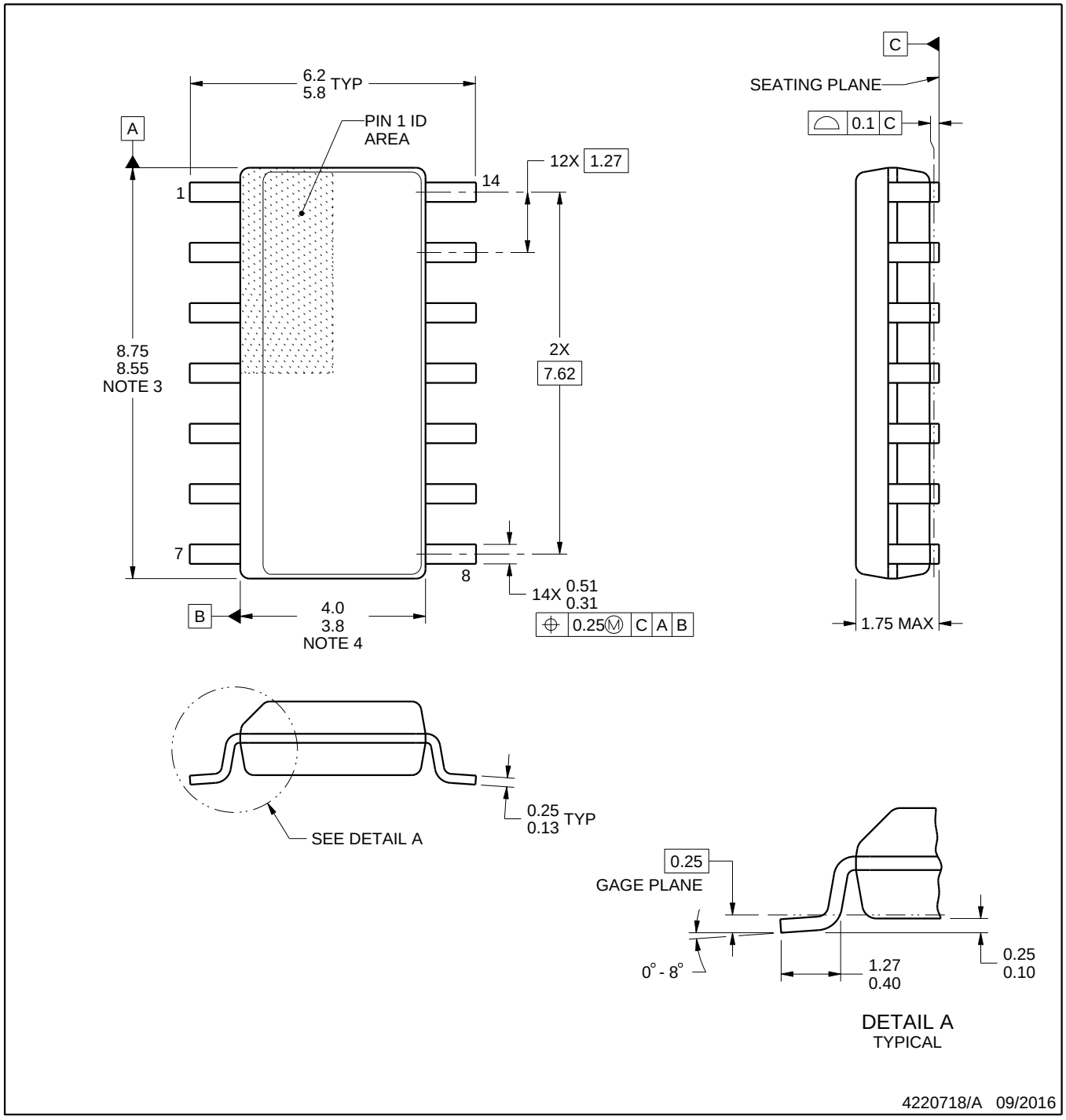

NOTES:

1. All linear dimensions are in millimeters. Dimensions in parenthesis are for reference only. Dimensioning and tolerancing per ASME Y14.5M.
2. This drawing is subject to change without notice.
3. This dimension does not include mold flash, protrusions, or gate burrs. Mold flash, protrusions, or gate burrs shall not exceed 0.15 mm, per side.
4. This dimension does not include interlead flash. Interlead flash shall not exceed 0.43 mm, per side.
5. Reference JEDEC registration MS-012, variation AB.

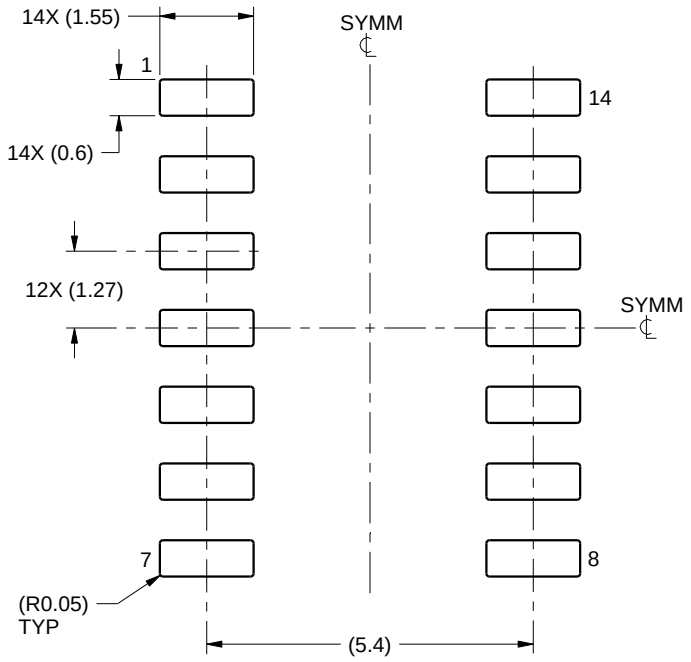

LAND PATTERN EXAMPLE
SCALE:8X

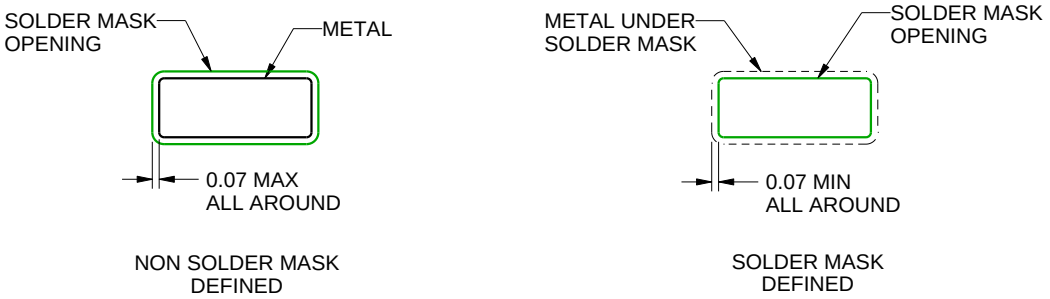

SOLDER MASK DETAILS

4220718/A 09/2016

NOTES: (continued)

6. Publication IPC-7351 may have alternate designs.
7. Solder mask tolerances between and around signal pads can vary based on board fabrication site.

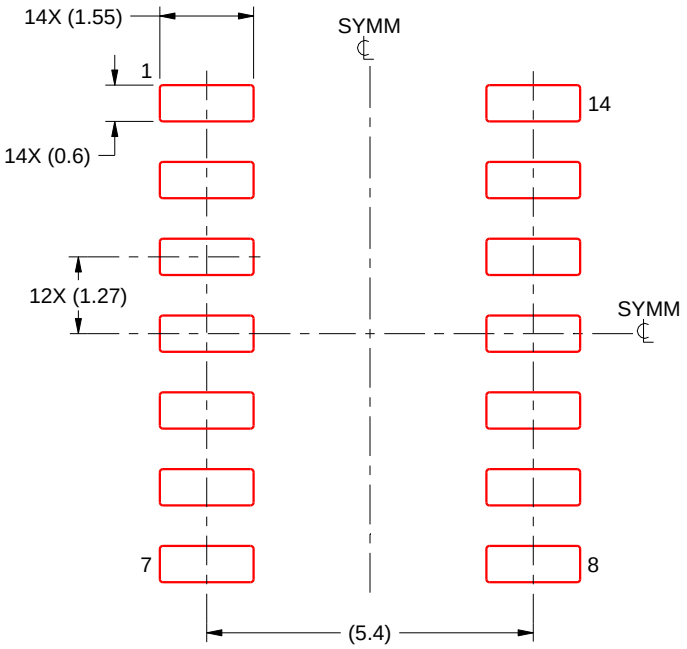

SOLDER PASTE EXAMPLE
BASED ON 0.125 mm THICK STENCIL
SCALE:8X

4220718/A 09/2016

NOTES: (continued)

8. Laser cutting apertures with trapezoidal walls and rounded corners may offer better paste release. IPC-7525 may have alternate design recommendations.
9. Board assembly site may have different recommendations for stencil design.

W (R–GDFP–F14) CERAMIC DUAL FLATPACK

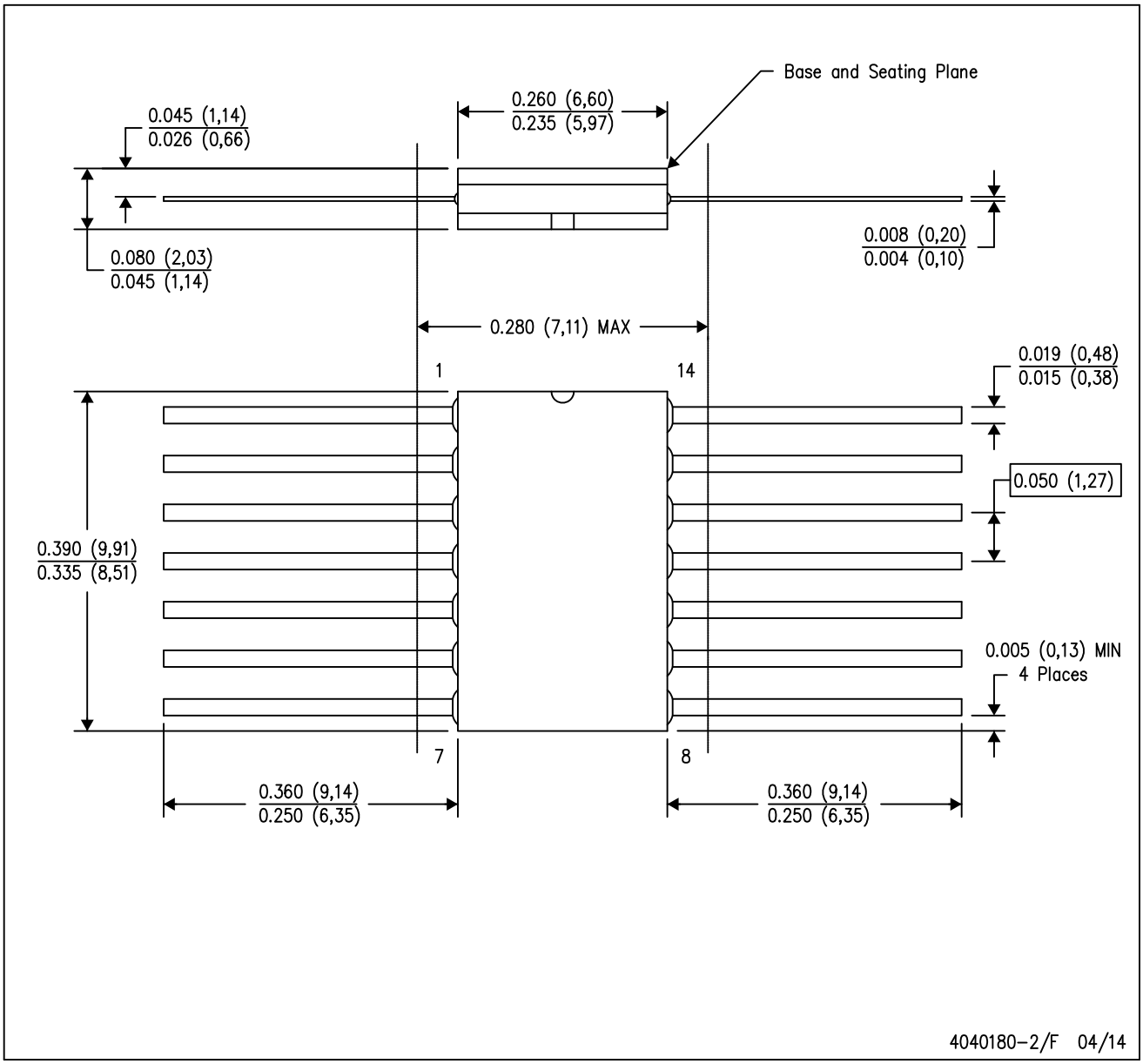

NOTES:
A. All linear dimensions are in inches (millimeters).
B. This drawing is subject to change without notice.
C. This package can be hermetically sealed with a ceramic lid using glass frit.
D. Index point is provided on cap for terminal identification only.
E. Falls within MIL STD 1835 GDFP1–F14

J 14 CDIP - 5.08 mm max height

CERAMIC DUAL IN LINE PACKAGE

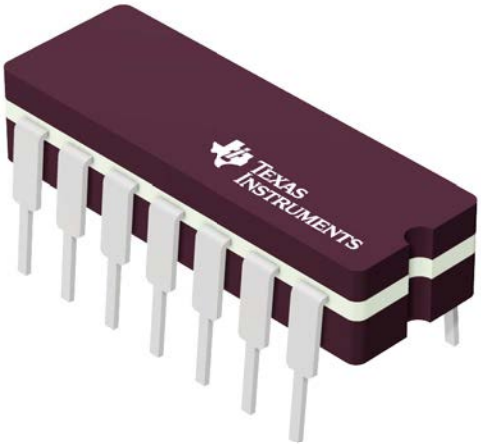

Images above are just a representation of the package family, actual package may vary.
Refer to the product data sheet for package details.

4040083-5/G

PACKAGE OUTLINE

J0014A

CDIP - 5.08 mm max height

CERAMIC DUAL IN LINE PACKAGE

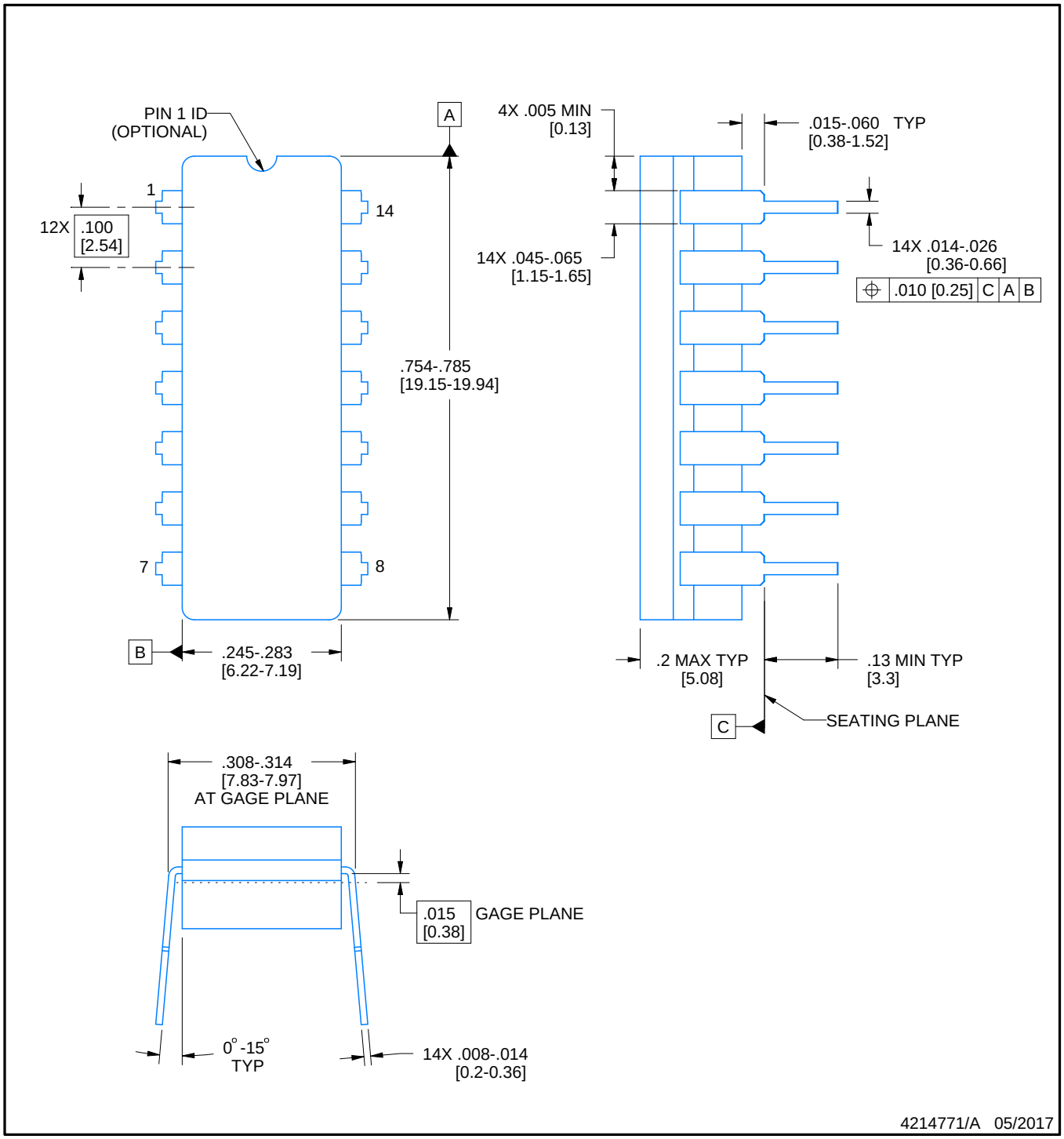

NOTES:

1. All controlling linear dimensions are in inches. Dimensions in brackets are in millimeters. Any dimension in brackets or parenthesis are for reference only. Dimensioning and tolerancing per ASME Y14.5M.
2. This drawing is subject to change without notice.
3. This package is hermitically sealed with a ceramic lid using glass frit.
4. Index point is provided on cap for terminal identification only and on press ceramic glass frit seal only.
5. Falls within MIL-STD-1835 and GDIP1-T14.

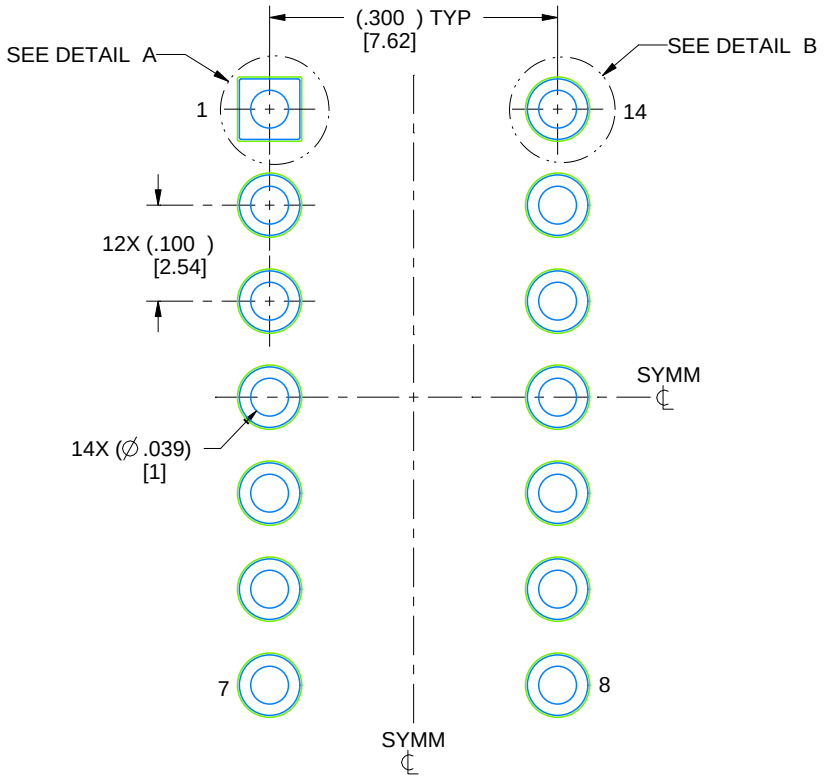

LAND PATTERN EXAMPLE
NON-SOLDER MASK DEFINED
SCALE: 5X

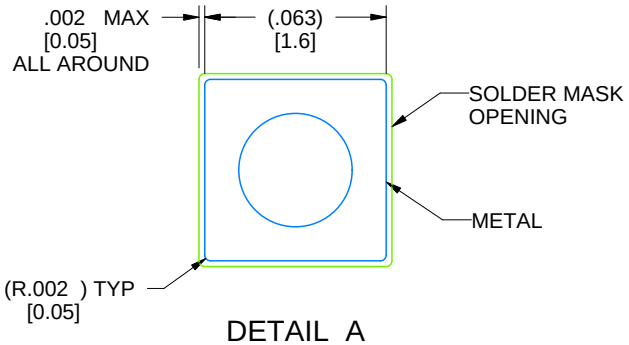

DETAIL A
SCALE: 15X

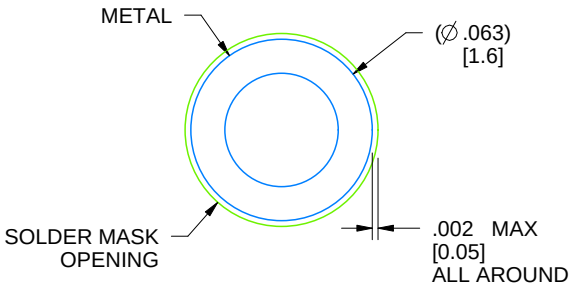

DETAIL B
13X, SCALE: 15X

4214771/A 05/2017

N (R–PDIP–T**) PLASTIC DUAL–IN–LINE PACKAGE

16 PINS SHOWN

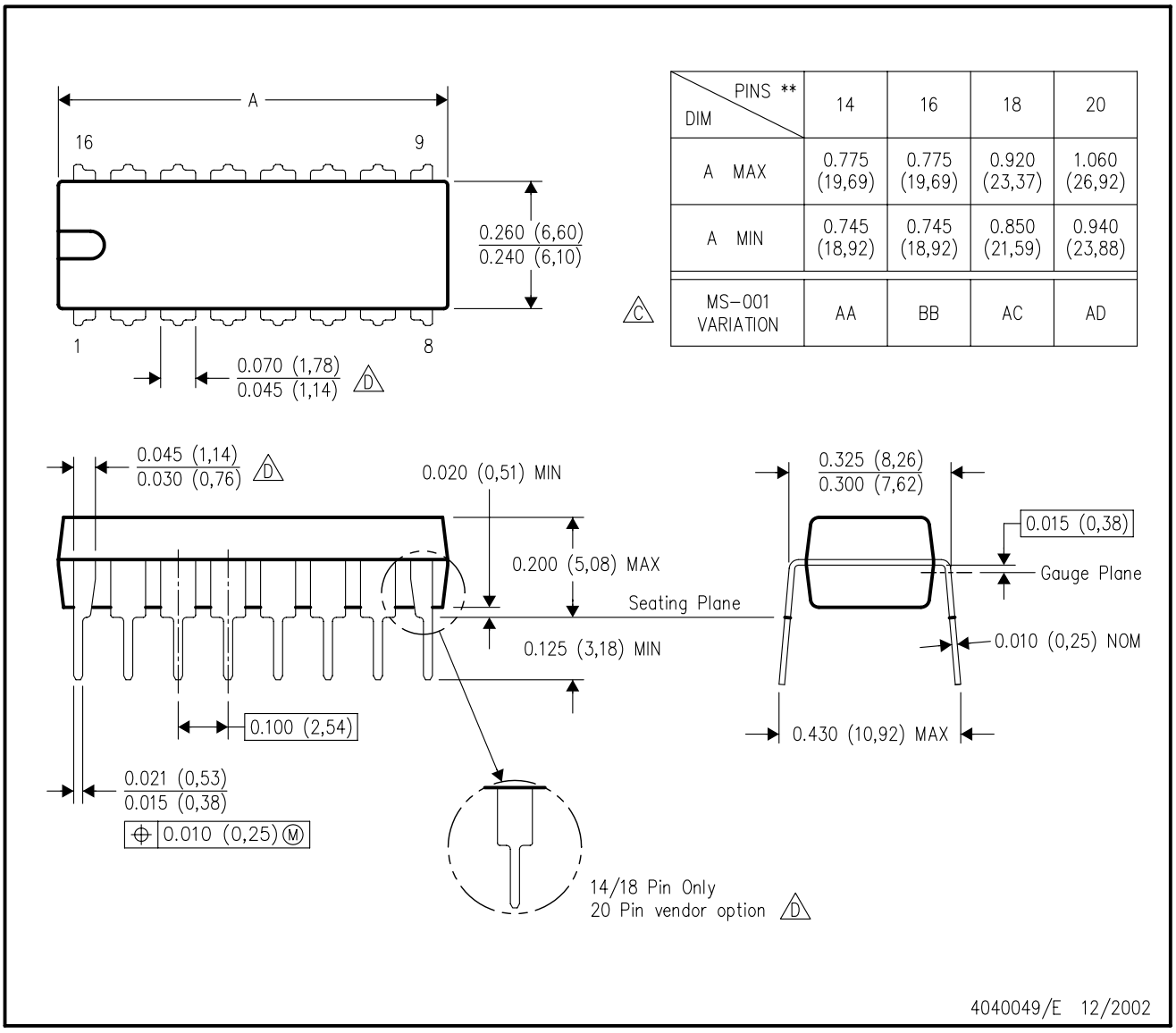

DIM \ PINS **	14	16	18	20
A MAX	0.775 (19,69)	0.775 (19,69)	0.920 (23,37)	1.060 (26,92)
A MIN	0.745 (18,92)	0.745 (18,92)	0.850 (21,59)	0.940 (23,88)
MS–001 VARIATION (C)	AA	BB	AC	AD

NOTES:
A. All linear dimensions are in inches (millimeters).
B. This drawing is subject to change without notice.
C. Falls within JEDEC MS–001, except 18 and 20 pin minimum body length (Dim A).
D. The 20 pin end lead shoulder width is a vendor option, either half or full width.

IMPORTANT NOTICE AND DISCLAIMER

TI PROVIDES TECHNICAL AND RELIABILITY DATA (INCLUDING DATA SHEETS), DESIGN RESOURCES (INCLUDING REFERENCE DESIGNS), APPLICATION OR OTHER DESIGN ADVICE, WEB TOOLS, SAFETY INFORMATION, AND OTHER RESOURCES “AS IS” AND WITH ALL FAULTS, AND DISCLAIMS ALL WARRANTIES, EXPRESS AND IMPLIED, INCLUDING WITHOUT LIMITATION ANY IMPLIED WARRANTIES OF MERCHANTABILITY, FITNESS FOR A PARTICULAR PURPOSE OR NON-INFRINGEMENT OF THIRD PARTY INTELLECTUAL PROPERTY RIGHTS.

These resources are intended for skilled developers designing with TI products. You are solely responsible for (1) selecting the appropriate TI products for your application, (2) designing, validating and testing your application, and (3) ensuring your application meets applicable standards, and any other safety, security, regulatory or other requirements.

These resources are subject to change without notice. TI grants you permission to use these resources only for development of an application that uses the TI products described in the resource. Other reproduction and display of these resources is prohibited. No license is granted to any other TI intellectual property right or to any third party intellectual property right. TI disclaims responsibility for, and you will fully indemnify TI and its representatives against, any claims, damages, costs, losses, and liabilities arising out of your use of these resources.

TI’s products are provided subject to TI’s Terms of Sale or other applicable terms available either on ti.com or provided in conjunction with such TI products. TI’s provision of these resources does not expand or otherwise alter TI’s applicable warranties or warranty disclaimers for TI products.

TI objects to and rejects any additional or different terms you may have proposed.

Mailing Address: Texas Instruments, Post Office Box 655303, Dallas, Texas 75265
Copyright © 2024, Texas Instruments Incorporated