- **3-State Outputs Interface Directly With System Bus**
- **Gated Output-Control LInes for Enabling or Disabling the Outputs**
- **Fully Independent Clock Virtually Eliminates Restrictions for Operating in One of Two Modes:**
  - **Parallel Load**
  - **Do Nothing (Hold)**
- **For Application as Bus Buffer Registers**
- **Package Options Include Plastic Small-Outline (D) Packages, Ceramic Flat (W) Packages, Ceramic Chip Carriers (FK), and Standard Plastic (N) and Ceramic (J) DIPs**

TYPE	TYPICAL PROPAGATION DELAY TIME	MAXIMUM CLOCK FREQUENCY
’173	23 ns	35 MHz
’LS173A	18 ns	50 MHz

SN54173, SN54LS173A . . . J OR W PACKAGE
SN74173 . . . N PACKAGE
SN74LS173A . . . D or N PACKAGE
(TOP VIEW)

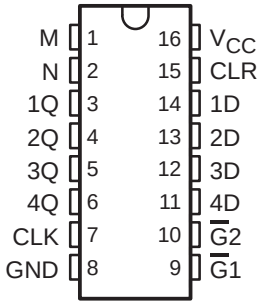

SN54LS173A . . . FK PACKAGE
(TOP VIEW)

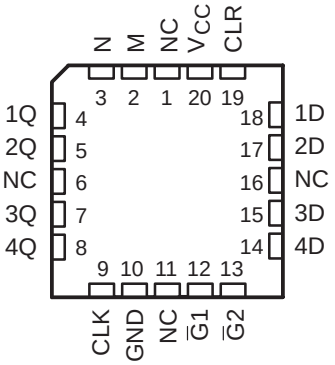

NC – No internal connection

description

The ’173 and ’LS173A 4-bit registers include D-type flip-flops featuring totem-pole 3-state outputs capable of driving highly capacitive or relatively low-impedance loads. The high-impedance third state and increased high-logic-level drive provide these flip-flops with the capability of being connected directly to and driving the bus lines in a bus-organized system without need for interface or pull-up components. Up to 128 of the SN74173 or SN74LS173A outputs can be connected to a common bus and still drive two Series 54/74 or 54LS/74LS TTL normalized loads, respectively. Similarly, up to 49 of the SN54173 or SN54LS173A outputs can be connected to a common bus and drive one additional Series 54/74 or 54LS/74LS TTL normalized load, respectively. To minimize the possibility that two outputs will attempt to take a common bus to opposite logic levels, the output control circuitry is designed so that the average output disable times are shorter than the average output enable times.

Gated enable inputs are provided on these devices for controlling the entry of data into the flip-flops. When both data-enable ($\overline{G}1$, $\overline{G}2$) inputs are low, data at the D inputs are loaded into their respective flip-flops on the next positive transition of the buffered clock input. Gate output-control (M, N) inputs also are provided. When both are low, the normal logic states (high or low levels) of the four outputs are available for driving the loads or bus lines. The outputs are disabled independently from the level of the clock by a high logic level at either output-control input. The outputs then present a high impedance and neither load nor drive the bus line. Detailed operation is given in the function table.

The SN54173 and SN54LS173A are characterized for operation over the full military temperature range of –55°C to 125°C. The SN74173 and SN74LS173A are characterized for operation from 0°C to 70°C.

Please be aware that an important notice concerning availability, standard warranty, and use in critical applications of Texas Instruments semiconductor products and disclaimers thereto appears at the end of this data sheet.

PRODUCTION DATA information is current as of publication date. Products conform to specifications per the terms of Texas Instruments standard warranty. Production processing does not necessarily include testing of all parameters.

Copyright © 1999, Texas Instruments Incorporated

On products compliant to MIL-PRF-38535, all parameters are tested unless otherwise noted. On all other products, production processing does not necessarily include testing of all parameters.

FUNCTION TABLE

INPUTS					OUTPUT Q
CLR	CLK	DATA ENABLE $\overline{G1}$	DATA ENABLE $\overline{G2}$	DATA D	
H	X	X	X	X	L
L	L	X	X	X	Q_0
L	↑	H	X	X	Q_0
L	↑	X	H	X	Q_0
L	↑	L	L	L	L
L	↑	L	L	H	H

When either M or N (or both) is (are) high, the output is disabled to the high-impedance state; however, sequential operation of the flip-flops is not affected.

logic symbol†

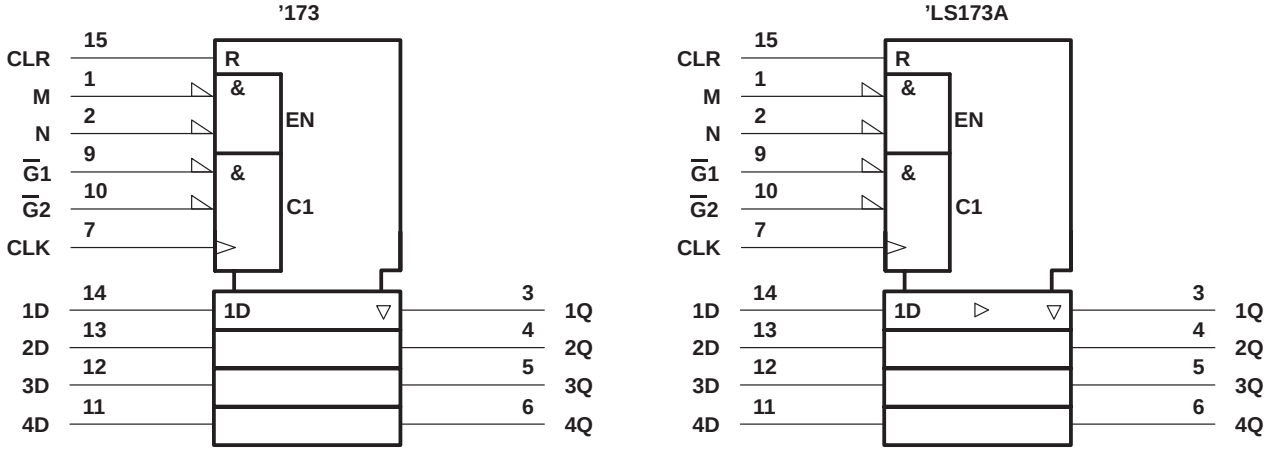

† This symbol is in accordance with ANSI/IEEE Standard 91-1984 and IEC Publication 617-12.
Pin numbers shown are for D, J, N, and W packages.

logic diagram (positive logic)

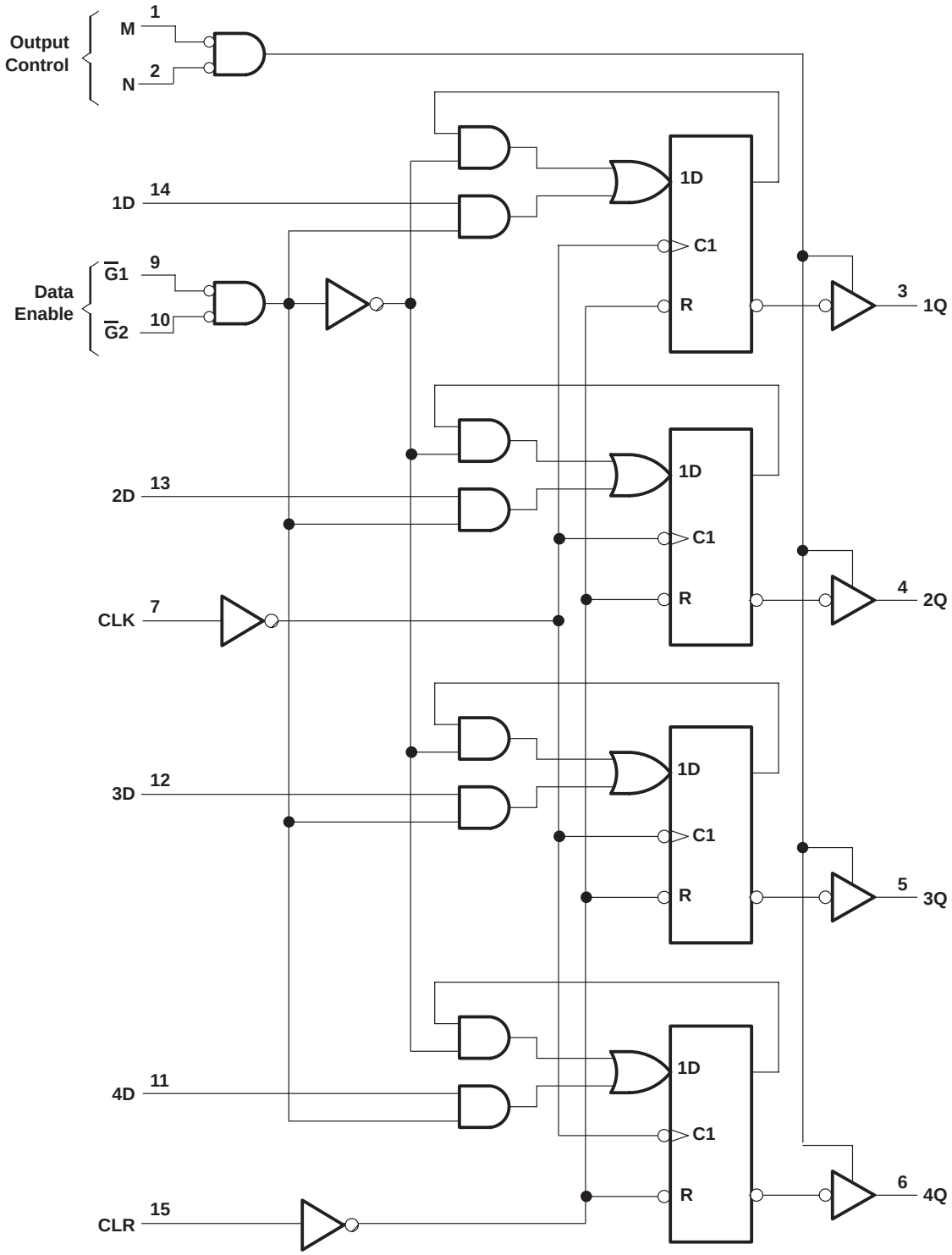

Pin numbers shown are for D, J, N, and W packages.

schematics of inputs and outputs

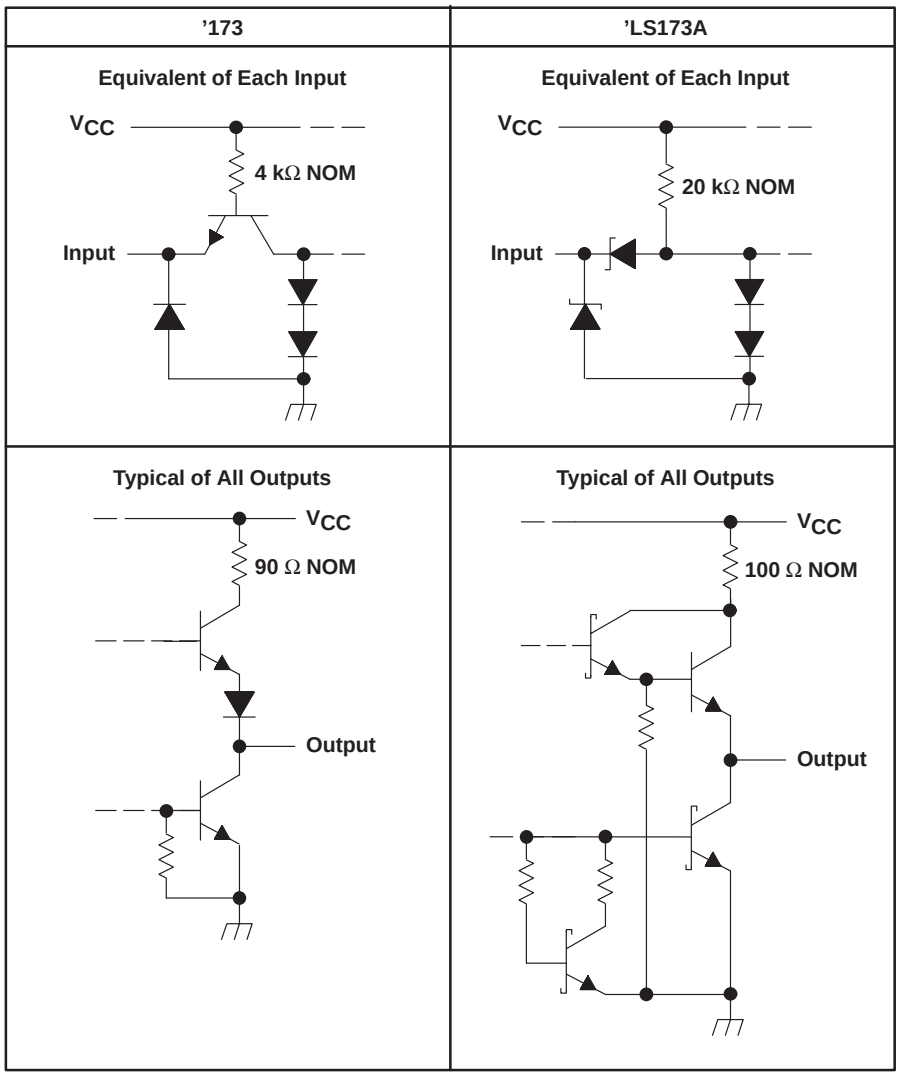

absolute maximum ratings over operating free-air temperature range (unless otherwise noted)†

Supply voltage, V_{CC} (see Note 1)	–0.5 V to 7 V
Input voltage: '173	–0.5 V to 5.5 V
'LS173A	–0.5 V to 7 V
Off-state output voltage	–0.5 V to 5.5 V
Package thermal impedance, θ_{JA} (see Note 2): D package	113°C/W
N package	78°C/W
Storage temperature range, T_{stg}	–65°C to 150°C

† Stresses beyond those listed under "absolute maximum ratings" may cause permanent damage to the device. These are stress ratings only, and functional operation of the device at these or any other conditions beyond those indicated under "recommended operating conditions" is not implied. Exposure to absolute-maximum-rated conditions for extended periods may affect device reliability.

NOTES: 1. Voltage values are with respect to network ground terminal.
2. The package thermal impedance is calculated in accordance with JESD 51, except for through-hole packages, which use a trace length of zero.

recommended operating conditions (see Note 3)

		SN54173			SN74173			UNIT
		MIN	NOM	MAX	MIN	NOM	MAX	
V_{CC}	Supply voltage	4.5	5	5.5	4.75	5	5.25	V
I_{OH}	High-level output current			–2			–5.2	mA
I_{OL}	Low-level output current			16			16	mA
T_A	Operating free-air temperature	–55		125	0		70	°C

NOTE 3: All unused inputs of the device must be held at V_{CC} or GND to ensure proper device operation. Refer to the TI application report, *Implications of Slow or Floating CMOS Inputs,* literature number SCBA004.

electrical characteristics over recommended operating free-air temperature range (unless otherwise noted)

PARAMETER		TEST CONDITIONS†		SN54173			SN74173			UNIT
				MIN	TYP‡	MAX	MIN	TYP‡	MAX	
V_{IH}	High-level input voltage			2			2			V
V_{IL}	Low-level input voltage					0.8			0.8	V
V_{IK}	Input clamp voltage	V_{CC} = MIN,	I_I = –12 mA			–1.5			–1.5	V
V_{OH}	High-level output voltage	V_{CC} = MIN, V_{IL} = 0.8 V,	V_{IH} = 2 V, I_{OH} = MAX	2.4			2.4			V
V_{OL}	Low-level output voltage	V_{CC} = MIN, V_{IL} = 0.8 V,	V_{IH} = 2 V, I_{OL} = 16 mA			0.4			0.4	V
$I_{O(off)}$	Off-state (high-impedance state) output current	V_{CC} = MAX, V_{IH} = 2 V	V_O = 2.4 V			150			40	µA
			V_O = 0.4 V			–150			–40	
I_I	Input current at maximum input voltage	V_{CC} = MAX,	V_I = 5.5 V			1			1	mA
I_{IH}	High-level input current	V_{CC} = MAX,	V_I = 2.4 V			40			40	µA
I_{IL}	Low-level input current	V_{CC} = MAX,	V_I = 0.4 V			–1.6			–1.6	mA
I_{OS}	Short-circuit output current§	V_{CC} = MAX		–30		–70	–30		–70	mA
I_{CC}	Supply current	V_{CC} = MAX,	See Note 4		50	72		50	72	mA

† For conditions shown as MIN or MAX, use the appropriate value specified under recommended operating conditions.
‡ All typical values are at V_{CC} = 5 V, T_A = 25°C.
§ Not more than one output should be shorted at a time.
NOTE 4: I_{CC} is measured with all outputs open; CLR grounded, following momentary connection to 4.5 V, N, $\overline{G}1$, $\overline{G}2$, and all data inputs grounded; and CLK and M at 4.5 V.

timing requirements over recommended operating conditions (unless otherwise noted)

			SN54173		SN74173		UNIT
			MIN	MAX	MIN	MAX	
f_{clock}	Input clock frequency			25		25	MHz
t_w	Pulse duration	CLK or CLR	20		20		ns
t_{su}	Setup time	Data enable ($\overline{G}1$, $\overline{G}2$)	17		17		ns
		Data	10		10		
		CLR (inactive state)	10		10		
t_h	Hold time	Data enable ($\overline{G}1$, $\overline{G}2$)	2		2		ns
		Data	10		10		

switching characteristics, V_{CC} = 5 V, T_A = 25°C, R_L = 400 Ω (see Figure 1)

PARAMETER		TEST CONDITIONS	SN54173			SN74173			UNIT
			MIN	TYP	MAX	MIN	TYP	MAX	
f_{max}	Maximum clock frequency	C_L = 50 pF	25	35		25	35		MHz
t_{PHL}	Propagation delay time, high-to-low-level output from clear input			18	27		18	27	ns
t_{PLH}	Propagation delay time, low-to-high-level output from clock input			28	43		28	43	ns
t_{PHL}	Propagation delay time, high-to-low-level output from clock input			19	31		19	31	
t_{PZH}	Output enable time to high level		7	16	30	7	16	30	ns
t_{PZL}	Output enable time to low level		7	21	30	7	21	30	
t_{PHZ}	Output disable time from high level	C_L = 5 pF	3	5	14	3	5	14	ns
t_{PLZ}	Output disable time from low level		3	11	20	3	11	20	

recommended operating conditions

		SN54LS173A			SN74LS173A			UNIT
		MIN	NOM	MAX	MIN	NOM	MAX	
V_{CC}	Supply voltage	4.5	5	5.5	4.75	5	5.25	V
I_{OH}	High-level output current			–1			–2.6	mA
I_{OL}	Low-level output current			12			24	mA
T_A	Operating free-air temperature	–55		125	0		70	°C

electrical characteristics over recommended operating free-air temperature range (unless otherwise noted)

PARAMETER		TEST CONDITIONS†		SN54LS173A			SN74LS173A			UNIT
				MIN	TYP‡	MAX	MIN	TYP‡	MAX	UNIT
V_{IH}	High-level input voltage			2			2			V
V_{IL}	Low-level input voltage					0.7			0.8	V
V_{IK}	Input clamp voltage	V_{CC} = MIN,	I_I = –18 mA			–1.5			–1.5	V
V_{OH}	High-level output voltage	V_{CC} = MIN, V_{IL} = V_{IL}max,	V_{IH} = 2 V, I_{OH} = MAX	2.4	3.4		2.4	3.1		V
V_{OL}	Low-level output voltage	V_{CC} = MIN, V_{IL} = 0.8 V,	I_{OL} = 12 mA		0.25	0.4		0.25	0.4	V
			I_{OL} = 24 mA					0.35	0.5	V
$I_{O(off)}$	Off-state (high-impedance state) output current	V_{CC} = MAX, V_{IH} = 2 V	V_O = 2.7 V			20			20	V
			V_O = 0.4 V			–20			–20	
I_I	Input current at maximum input voltage	V_{CC} = MAX,	V_I = 7 V			0.1			0.1	mA
I_{IH}	High-level input current	V_{CC} = MAX,	V_I = 2.7 V			20			20	μA
I_{IL}	Low-level input current	V_{CC} = MAX,	V_I = 0.4 V			–0.4			–0.4	mA
I_{OS}	Short-circuit output current§	V_{CC} = MAX		–30		–130	–30		–130	mA
I_{CC}	Supply current	V_{CC} = MAX,	See Note 4		19	30		19	24	mA

† For conditions shown as MIN or MAX, use the appropriate value specified under recommended operating conditions.
‡ All typical values are at V_{CC} = 5 V, T_A = 25°C.
§ Not more than one output should be shorted at a time.
NOTE 4: I_{CC} is measured with all outputs open; CLR grounded, following momentary connection to 4.5 V, N, $\overline{G1}$, $\overline{G2}$, and all data inputs grounded; and CLK and M at 4.5 V.

timing requirements over recommended operating conditions (unless otherwise noted)

			SN54LS173A		SN74LS173A		UNIT
			MIN	MAX	MIN	MAX	
f_{clock}	Input clock frequency			30		25	MHz
t_w	Pulse duration	CLK or CLR	25		25		ns
t_{su}	Setup time	Data enable ($\overline{G1}$, $\overline{G2}$)	35		35		ns
		Data	17		17		
		CLR (inactive state)	10		10		
t_h	Hold time	Data enable ($\overline{G1}$, $\overline{G2}$)	0		0		ns
		Data	3		3		

switching characteristics, V_{CC} = 5 V, T_A = 25°C, R_L = 667 Ω (see Figure 2)

PARAMETER		TEST CONDITIONS	SN54LS173A			SN74LS173A			UNIT
			MIN	TYP	MAX	MIN	TYP	MAX	
f_{max}	Maximum clock frequency	C_L = 45 pF	30	50		30	50		MHz
t_{PHL}	Propagation delay time, high-to-low-level output from clear input			26	35		26	35	ns
t_{PLH}	Propagation delay time, low-to-high-level output from clock input			17	25		17	25	ns
t_{PHL}	Propagation delay time, high-to-low-level output from clock input			22	30		22	30	
t_{PZH}	Output enable time to high level			15	23		15	23	ns
t_{PZL}	Output enable time to low level			18	27		18	27	
t_{PHZ}	Output disable time from high level	C_L = 5 pF		11	20		11	20	ns
t_{PLZ}	Output disable time from low level			11	17		11	17	

PARAMETER MEASUREMENT INFORMATION
SERIES 54/74 AND 54S/74S DEVICES

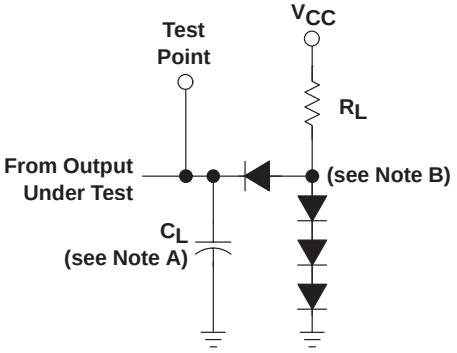

LOAD CIRCUIT
FOR 2-STATE TOTEM-POLE OUTPUTS

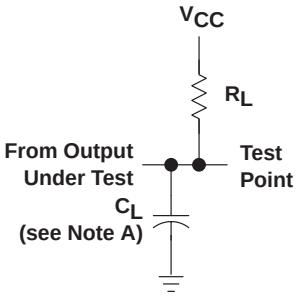

LOAD CIRCUIT
FOR OPEN-COLLECTOR OUTPUTS

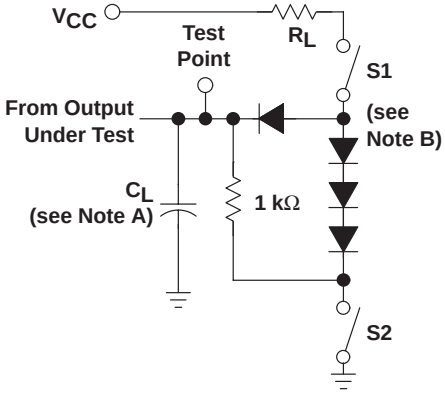

LOAD CIRCUIT
FOR 3-STATE OUTPUTS

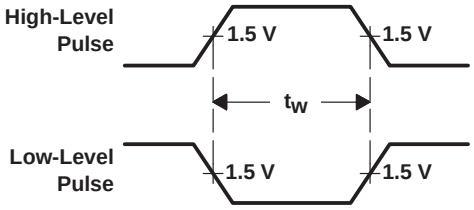

VOLTAGE WAVEFORMS
PULSE DURATIONS

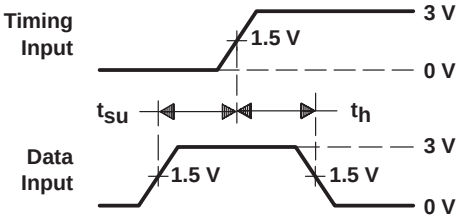

VOLTAGE WAVEFORMS
SETUP AND HOLD TIMES

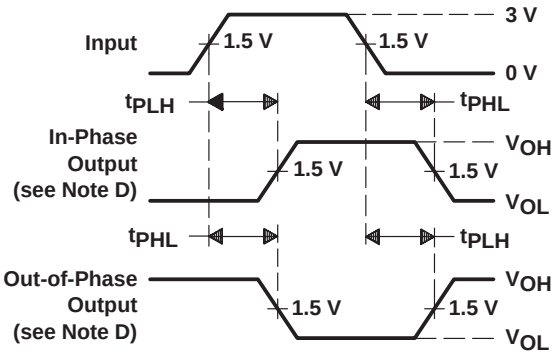

VOLTAGE WAVEFORMS
PROPAGATION DELAY TIMES

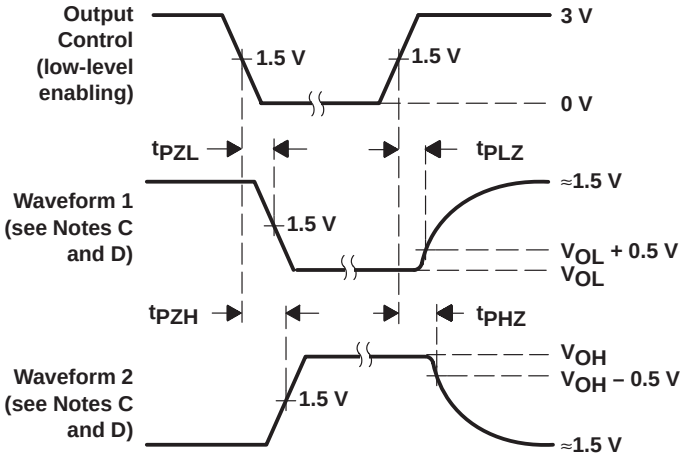

VOLTAGE WAVEFORMS
ENABLE AND DISABLE TIMES, 3-STATE OUTPUTS

NOTES:
A. C_L includes probe and jig capacitance.
B. All diodes are 1N3064 or equivalent.
C. Waveform 1 is for an output with internal conditions such that the output is low except when disabled by the output control. Waveform 2 is for an output with internal conditions such that the output is high except when disabled by the output control.
D. S1 and S2 are closed for t_{PLH}, t_{PHL}, t_{PHZ}, and t_{PLZ}; S1 is open and S2 is closed for t_{PZH}; S1 is closed and S2 is open for t_{PZL}.
E. All input pulses are supplied by generators having the following characteristics: PRR ≤ 1 MHz, $Z_O \approx 50\ \Omega$, t_r and $t_f \leq 7$ ns for Series 54/74 devices and t_r and $t_f \leq 2.5$ ns for Series 54S/74S devices.
F. The outputs are measured one at a time with one input transition per measurement.

Figure 1. Load Circuits and Voltage Waveforms

PARAMETER MEASUREMENT INFORMATION
SERIES 54LS/74LS DEVICES

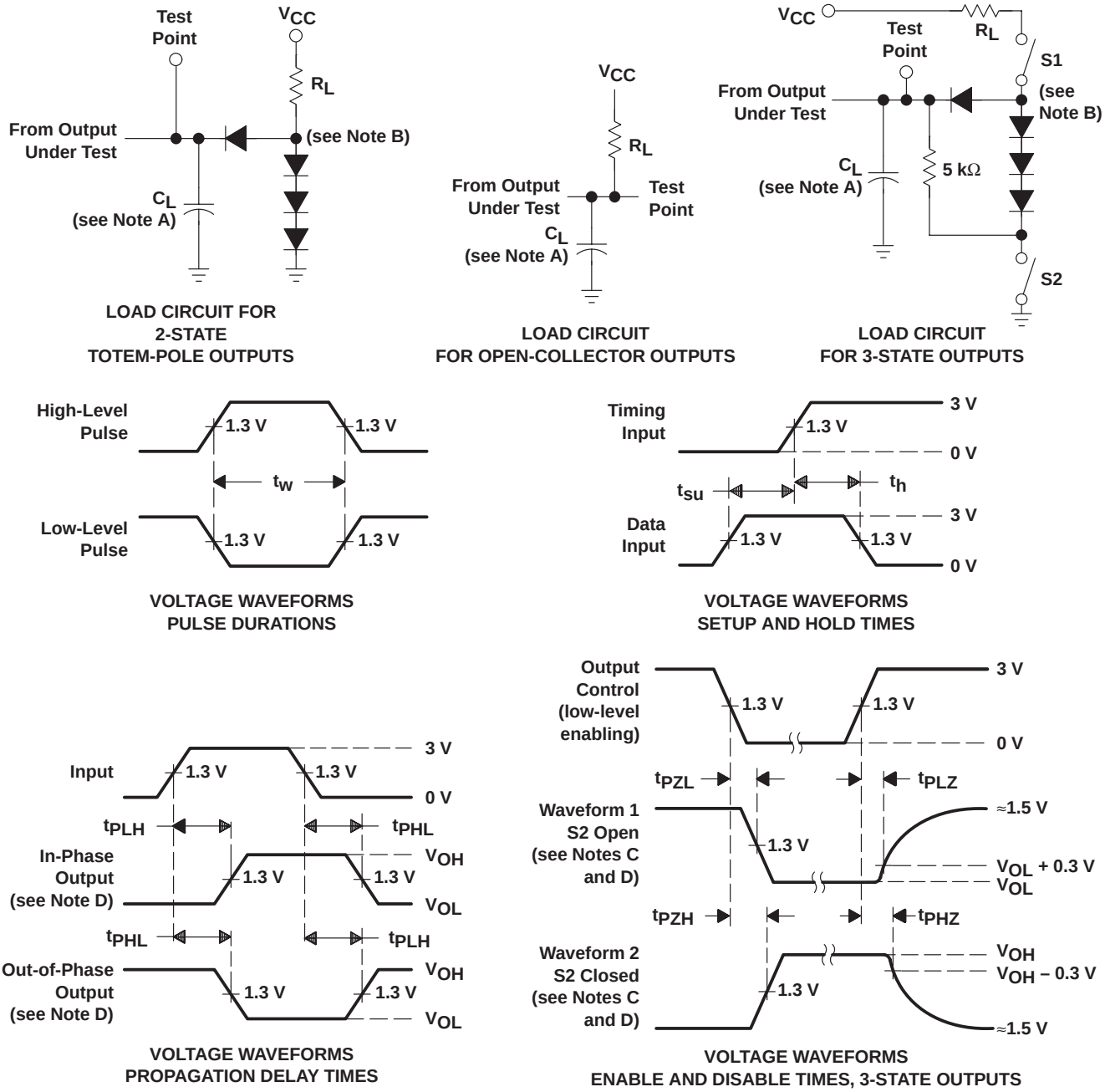

NOTES:
A. C_L includes probe and jig capacitance.
B. All diodes are 1N3064 or equivalent.
C. Waveform 1 is for an output with internal conditions such that the output is low except when disabled by the output control. Waveform 2 is for an output with internal conditions such that the output is high except when disabled by the output control.
D. S1 and S2 are closed for t_{PLH}, t_{PHL}, t_{PHZ}, and t_{PLZ}; S1 is open and S2 is closed for t_{PZH}; S1 is closed and S2 is open for t_{PZL}.
E. Phase relationships between inputs and outputs have been chosen arbitrarily for these examples.
F. All input pulses are supplied by generators having the following characteristics: PRR ≤ 1 MHz, $Z_O \approx 50\ \Omega$, $t_r \leq 15$ ns, $t_f \leq 6$ ns.
G. The outputs are measured one at a time with one input transition per measurement.

Figure 2. Load Circuits and Voltage Waveforms

PACKAGING INFORMATION

Orderable Device	Status (1)	Package Type	Package Drawing	Pins	Package Qty	Eco Plan (2)	Lead finish/ Ball material (6)	MSL Peak Temp (3)	Op Temp (°C)	Device Marking (4/5)	Samples
JM38510/36101BEA	ACTIVE	CDIP	J	16	25	Non-RoHS & Green	SNPB	N / A for Pkg Type	-55 to 125	JM38510/ 36101BEA	Samples
JM38510/36101BFA	ACTIVE	CFP	W	16	25	Non-RoHS & Green	SNPB	N / A for Pkg Type	-55 to 125	JM38510/ 36101BFA	Samples
M38510/36101BEA	ACTIVE	CDIP	J	16	25	Non-RoHS & Green	SNPB	N / A for Pkg Type	-55 to 125	JM38510/ 36101BEA	Samples
M38510/36101BFA	ACTIVE	CFP	W	16	25	Non-RoHS & Green	SNPB	N / A for Pkg Type	-55 to 125	JM38510/ 36101BFA	Samples
SN54173J	ACTIVE	CDIP	J	16	25	Non-RoHS & Non-Green	SNPB	N / A for Pkg Type	-55 to 125	SN54173J	Samples
SN54LS173AJ	ACTIVE	CDIP	J	16	25	Non-RoHS & Green	SNPB	N / A for Pkg Type	-55 to 125	SN54LS173AJ	Samples
SN74LS173AD	ACTIVE	SOIC	D	16	40	RoHS & Green	NIPDAU	Level-1-260C-UNLIM	0 to 70	LS173A	Samples
SN74LS173AN	ACTIVE	PDIP	N	16	25	RoHS & Green	NIPDAU	N / A for Pkg Type	0 to 70	SN74LS173AN	Samples
SNJ54173J	ACTIVE	CDIP	J	16	25	Non-RoHS & Green	SNPB	N / A for Pkg Type	-55 to 125	SNJ54173J	Samples
SNJ54LS173AFK	ACTIVE	LCCC	FK	20	55	Non-RoHS & Green	SNPB	N / A for Pkg Type	-55 to 125	SNJ54LS 173AFK	Samples
SNJ54LS173AJ	ACTIVE	CDIP	J	16	25	Non-RoHS & Green	SNPB	N / A for Pkg Type	-55 to 125	SNJ54LS173AJ	Samples

(1) The marketing status values are defined as follows:
ACTIVE: Product device recommended for new designs.
LIFEBUY: TI has announced that the device will be discontinued, and a lifetime-buy period is in effect.
NRND: Not recommended for new designs. Device is in production to support existing customers, but TI does not recommend using this part in a new design.
PREVIEW: Device has been announced but is not in production. Samples may or may not be available.
OBSOLETE: TI has discontinued the production of the device.

(2) **RoHS:** TI defines "RoHS" to mean semiconductor products that are compliant with the current EU RoHS requirements for all 10 RoHS substances, including the requirement that RoHS substance do not exceed 0.1% by weight in homogeneous materials. Where designed to be soldered at high temperatures, "RoHS" products are suitable for use in specified lead-free processes. TI may reference these types of products as "Pb-Free".
RoHS Exempt: TI defines "RoHS Exempt" to mean products that contain lead but are compliant with EU RoHS pursuant to a specific EU RoHS exemption.
Green: TI defines "Green" to mean the content of Chlorine (Cl) and Bromine (Br) based flame retardants meet JS709B low halogen requirements of <=1000ppm threshold. Antimony trioxide based flame retardants must also meet the <=1000ppm threshold requirement.

(3) MSL, Peak Temp. - The Moisture Sensitivity Level rating according to the JEDEC industry standard classifications, and peak solder temperature.

(4) There may be additional marking, which relates to the logo, the lot trace code information, or the environmental category on the device.

(5) Multiple Device Markings will be inside parentheses. Only one Device Marking contained in parentheses and separated by a "~" will appear on a device. If a line is indented then it is a continuation of the previous line and the two combined represent the entire Device Marking for that device.

(6) Lead finish/Ball material - Orderable Devices may have multiple material finish options. Finish options are separated by a vertical ruled line. Lead finish/Ball material values may wrap to two lines if the finish value exceeds the maximum column width.

Important Information and Disclaimer: The information provided on this page represents TI's knowledge and belief as of the date that it is provided. TI bases its knowledge and belief on information provided by third parties, and makes no representation or warranty as to the accuracy of such information. Efforts are underway to better integrate information from third parties. TI has taken and continues to take reasonable steps to provide representative and accurate information but may not have conducted destructive testing or chemical analysis on incoming materials and chemicals. TI and TI suppliers consider certain information to be proprietary, and thus CAS numbers and other limited information may not be available for release.

In no event shall TI's liability arising out of such information exceed the total purchase price of the TI part(s) at issue in this document sold by TI to Customer on an annual basis.

OTHER QUALIFIED VERSIONS OF SN54LS173A, SN74LS173A :

- Catalog : SN74LS173A
- Military : SN54LS173A

NOTE: Qualified Version Definitions:

- Catalog - TI's standard catalog product
- Military - QML certified for Military and Defense Applications

TUBE

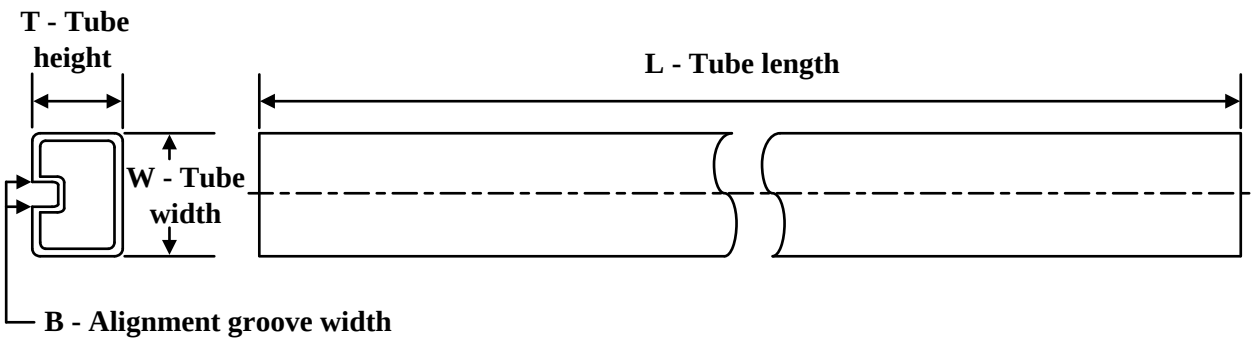

*All dimensions are nominal

Device	Package Name	Package Type	Pins	SPQ	L (mm)	W (mm)	T (µm)	B (mm)
JM38510/36101BFA	W	CFP	16	25	506.98	26.16	6220	NA
M38510/36101BFA	W	CFP	16	25	506.98	26.16	6220	NA
SN74LS173AD	D	SOIC	16	40	507	8	3940	4.32
SN74LS173AN	N	PDIP	16	25	506	13.97	11230	4.32
SN74LS173AN	N	PDIP	16	25	506	13.97	11230	4.32
SNJ54LS173AFK	FK	LCCC	20	55	506.98	12.06	2030	NA

W (R–GDFP–F16) CERAMIC DUAL FLATPACK

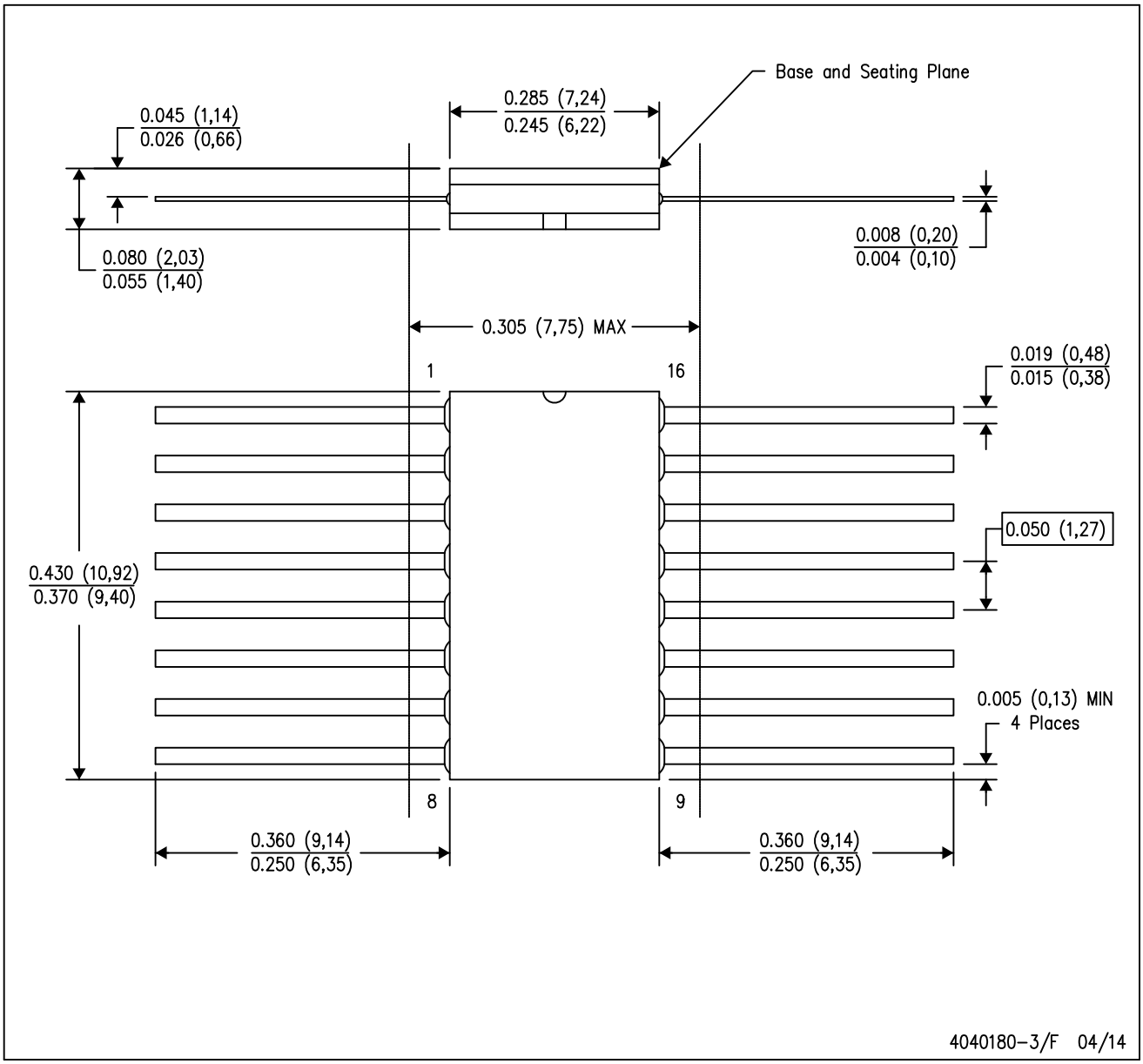

NOTES:
A. All linear dimensions are in inches (millimeters).
B. This drawing is subject to change without notice.
C. This package can be hermetically sealed with a ceramic lid using glass frit.
D. Index point is provided on cap for terminal identification only.
E. Falls within MIL STD 1835 GDFP2–F16

GENERIC PACKAGE VIEW

FK 20

LCCC - 2.03 mm max height

8.89 x 8.89, 1.27 mm pitch

LEADLESS CERAMIC CHIP CARRIER

This image is a representation of the package family, actual package may vary.
Refer to the product data sheet for package details.

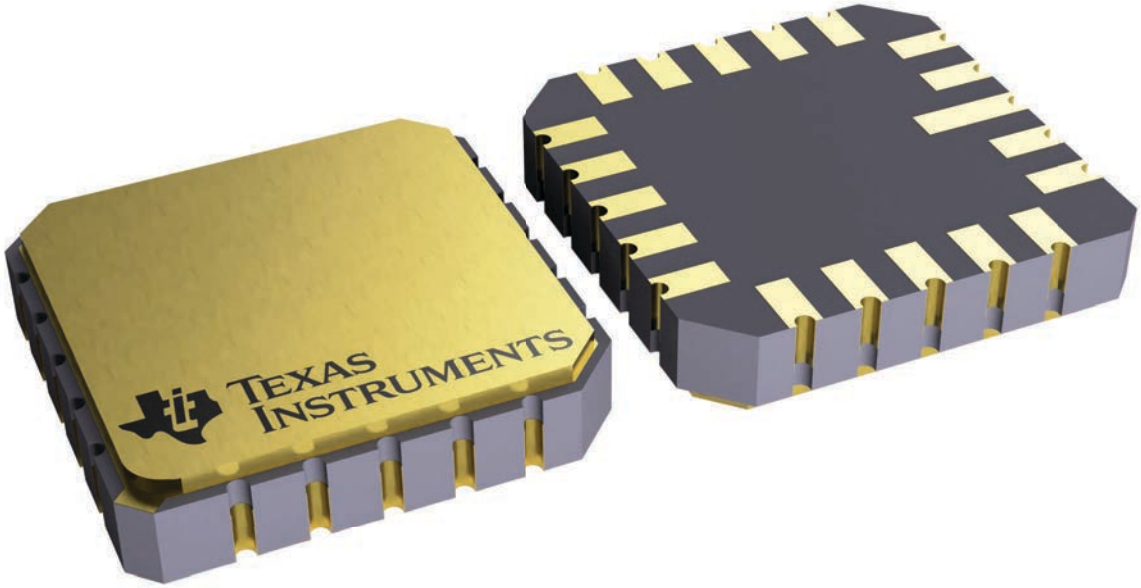

4229370VA\

J (R–GDIP–T**) CERAMIC DUAL IN–LINE PACKAGE

14 LEADS SHOWN

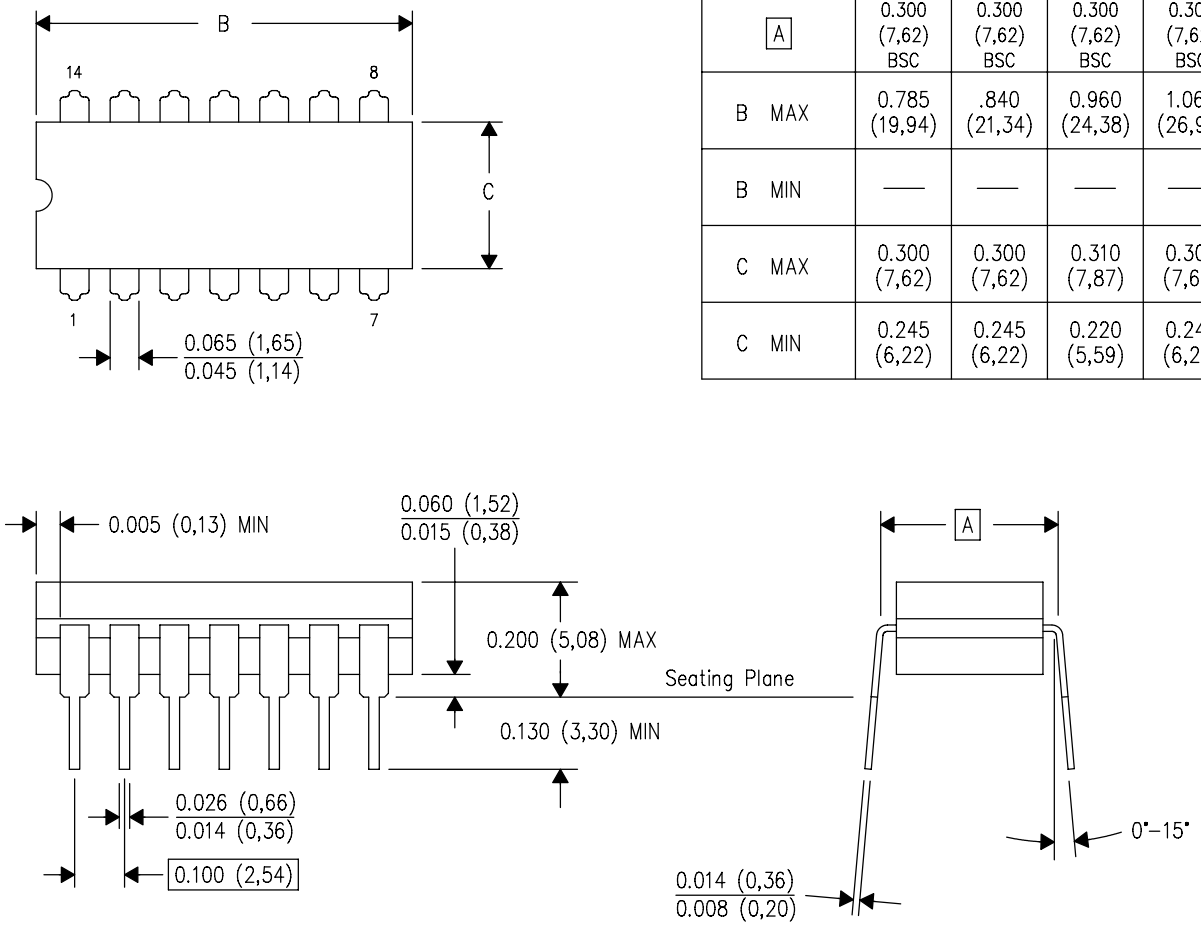

DIM \ PINS **	14	16	18	20
A	0.300 (7,62) BSC	0.300 (7,62) BSC	0.300 (7,62) BSC	0.300 (7,62) BSC
B MAX	0.785 (19,94)	.840 (21,34)	0.960 (24,38)	1.060 (26,92)
B MIN	—	—	—	—
C MAX	0.300 (7,62)	0.300 (7,62)	0.310 (7,87)	0.300 (7,62)
C MIN	0.245 (6,22)	0.245 (6,22)	0.220 (5,59)	0.245 (6,22)

4040083/F 03/03

NOTES:
- A. All linear dimensions are in inches (millimeters).
- B. This drawing is subject to change without notice.
- C. This package is hermetically sealed with a ceramic lid using glass frit.
- D. Index point is provided on cap for terminal identification only on press ceramic glass frit seal only.
- E. Falls within MIL STD 1835 GDIP1–T14, GDIP1–T16, GDIP1–T18 and GDIP1–T20.

N (R–PDIP–T**) PLASTIC DUAL–IN–LINE PACKAGE

16 PINS SHOWN

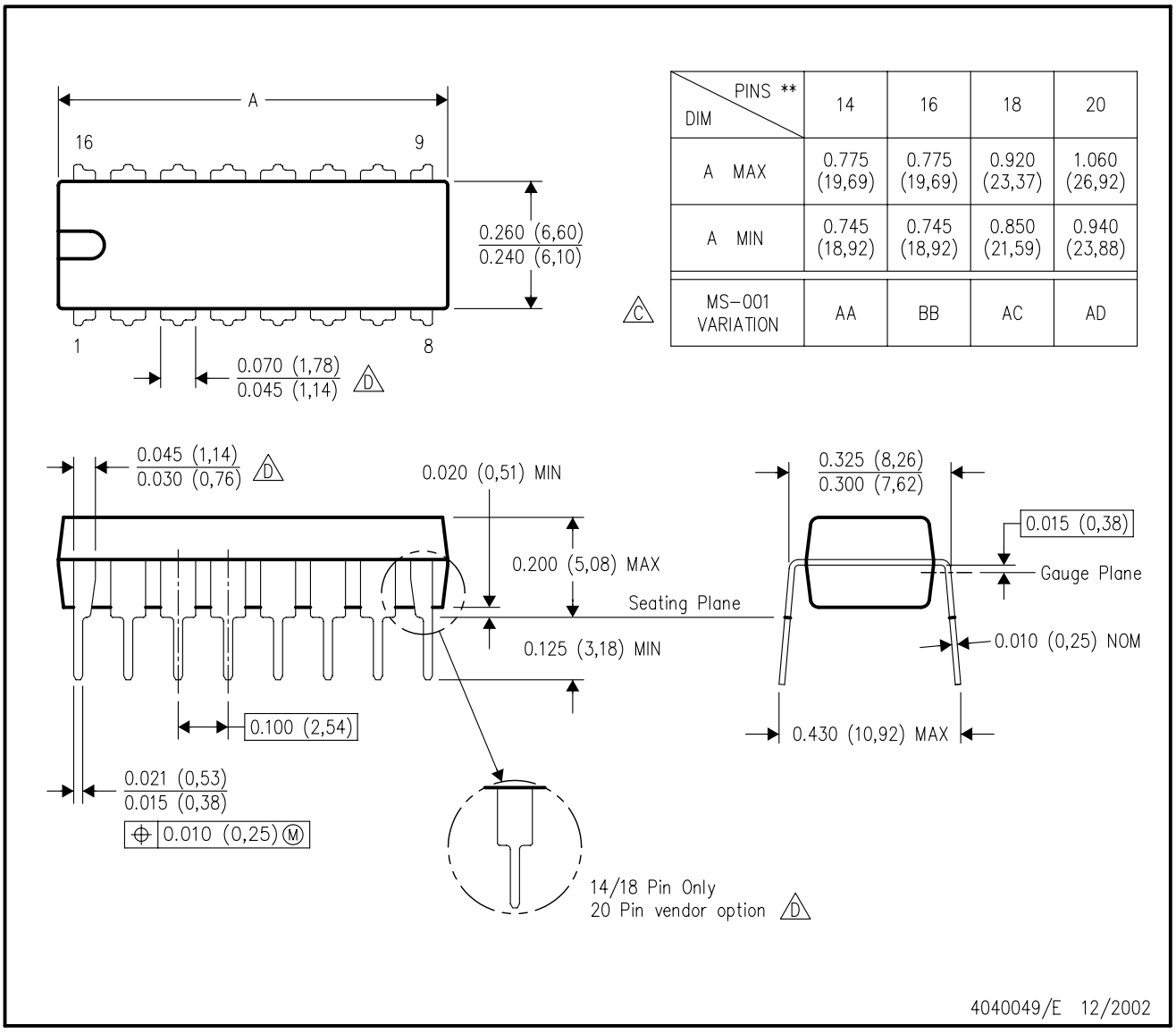

DIM \ PINS **	14	16	18	20
A MAX	0.775 (19,69)	0.775 (19,69)	0.920 (23,37)	1.060 (26,92)
A MIN	0.745 (18,92)	0.745 (18,92)	0.850 (21,59)	0.940 (23,88)
MS–001 VARIATION (C)	AA	BB	AC	AD

NOTES:
A. All linear dimensions are in inches (millimeters).
B. This drawing is subject to change without notice.
C. Falls within JEDEC MS–001, except 18 and 20 pin minimum body length (Dim A).
D. The 20 pin end lead shoulder width is a vendor option, either half or full width.

D (R–PDSO–G16) PLASTIC SMALL OUTLINE

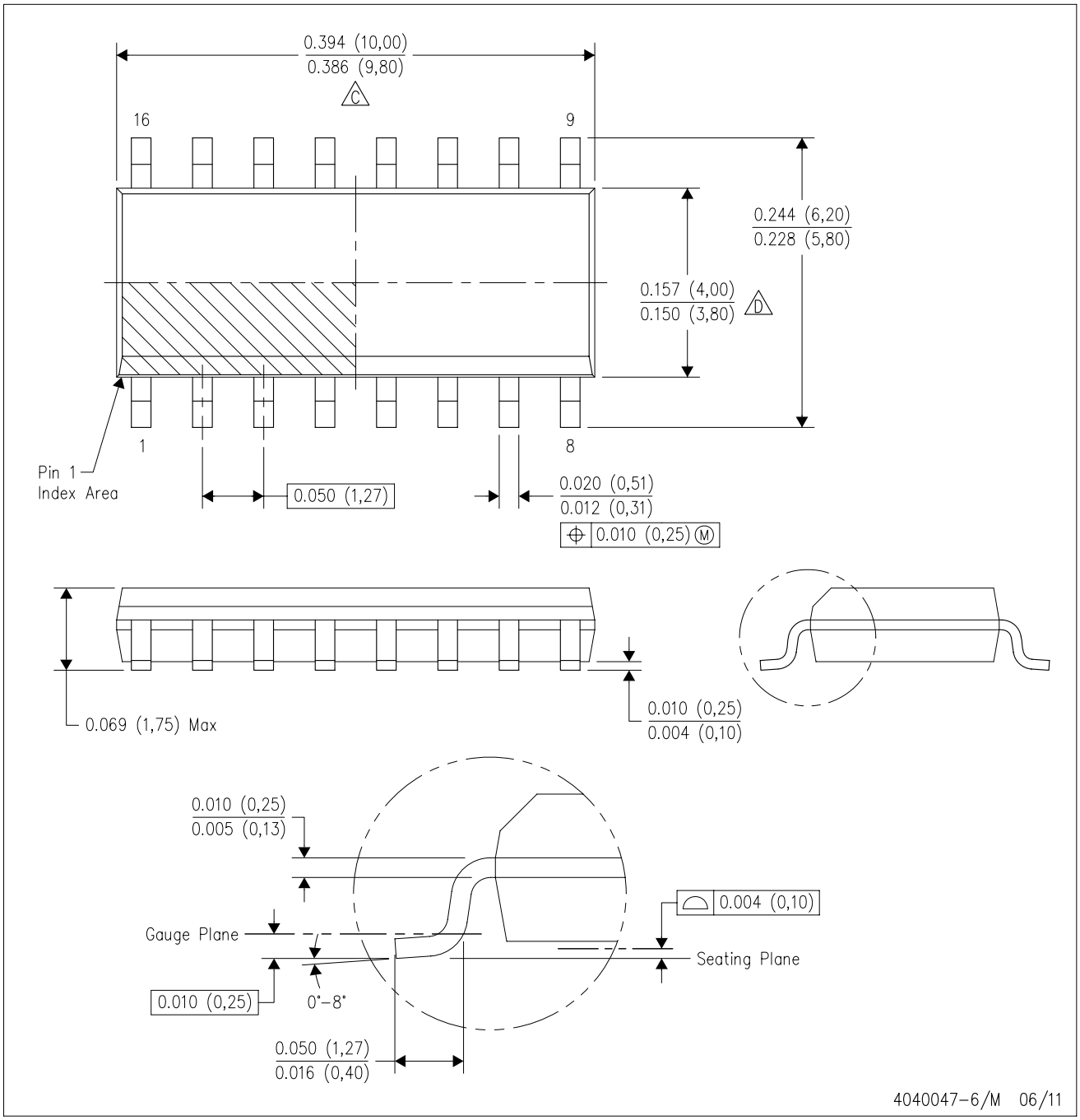

NOTES:
A. All linear dimensions are in inches (millimeters).
B. This drawing is subject to change without notice.
C. Body length does not include mold flash, protrusions, or gate burrs. Mold flash, protrusions, or gate burrs shall not exceed 0.006 (0,15) each side.
D. Body width does not include interlead flash. Interlead flash shall not exceed 0.017 (0,43) each side.
E. Reference JEDEC MS–012 variation AC.

IMPORTANT NOTICE AND DISCLAIMER

TI PROVIDES TECHNICAL AND RELIABILITY DATA (INCLUDING DATA SHEETS), DESIGN RESOURCES (INCLUDING REFERENCE DESIGNS), APPLICATION OR OTHER DESIGN ADVICE, WEB TOOLS, SAFETY INFORMATION, AND OTHER RESOURCES “AS IS” AND WITH ALL FAULTS, AND DISCLAIMS ALL WARRANTIES, EXPRESS AND IMPLIED, INCLUDING WITHOUT LIMITATION ANY IMPLIED WARRANTIES OF MERCHANTABILITY, FITNESS FOR A PARTICULAR PURPOSE OR NON-INFRINGEMENT OF THIRD PARTY INTELLECTUAL PROPERTY RIGHTS.

These resources are intended for skilled developers designing with TI products. You are solely responsible for (1) selecting the appropriate TI products for your application, (2) designing, validating and testing your application, and (3) ensuring your application meets applicable standards, and any other safety, security, regulatory or other requirements.

These resources are subject to change without notice. TI grants you permission to use these resources only for development of an application that uses the TI products described in the resource. Other reproduction and display of these resources is prohibited. No license is granted to any other TI intellectual property right or to any third party intellectual property right. TI disclaims responsibility for, and you will fully indemnify TI and its representatives against, any claims, damages, costs, losses, and liabilities arising out of your use of these resources.

TI’s products are provided subject to TI’s Terms of Sale or other applicable terms available either on ti.com or provided in conjunction with such TI products. TI’s provision of these resources does not expand or otherwise alter TI’s applicable warranties or warranty disclaimers for TI products.

TI objects to and rejects any additional or different terms you may have proposed.

Mailing Address: Texas Instruments, Post Office Box 655303, Dallas, Texas 75265
Copyright © 2024, Texas Instruments Incorporated