TL2575, TL2575HV 1-A Simple Step-Down Switching Voltage Regulators

1 Features

- Fixed 3.3-V, 5-V, 12-V, and 15-V options with ±5% regulation (maximum) over line, load, and temperature conditions
- Adjustable option with a range of 1.23 V to 37 V (57 V for HV version) and ±4% regulation (maximum) over line, load, and temperature conditions
- Specified 1-A output current
- Wide input voltage range
  - 4.75 V to 40 V (60 V for HV version)
- Requires only four external components (fixed versions) and uses readily available standard inductors
- 52-kHz (typical) fixed-frequency internal oscillator
- TTL shutdown capability with 50-μA (typical) standby current
- High efficiency
  - As high as 88% (typical)
- Thermal shutdown and current-limit protection with cycle-by-cycle current limiting

2 Applications

- Buck and inverting buck-boost power supplies
- Motor drives and building automation
- Grid infrastructure and factory automation and control

3 Description

The TL2575 and TL2575HV devices provide all the active functions needed for a step-down (buck) switching regulator in an integrated circuit. They require four to six external components for operation. They accept a wide input-voltage range of up to 60 V (TL2575-HV) and are available in fixed output voltages of 3.3 V, 5 V, 12 V, 15 V, or an adjustable-output version. The TL2575 and TL2575HV devices have an integrated switch capable of delivering 1 A of load current, with excellent line and load regulation. The device also offers internal frequency compensation, a fixed-frequency oscillator, cycle-by-cycle current limiting, and thermal shutdown. In addition, a manual shutdown is available through the external $\overline{\text{ON}}$/OFF pin.

Device Information

PART NUMBER	PACKAGE(1)	BODY SIZE (NOM)
TL2575, TL2575HV	PDIP (16)	19.31 mm × 6.35 mm
	TO-263 (5)	10.16 mm × 8.93 mm
	TO-220 (5)	10.16 mm × 8.82 mm

(1) For all available packages, see the orderable addendum at the end of the data sheet.

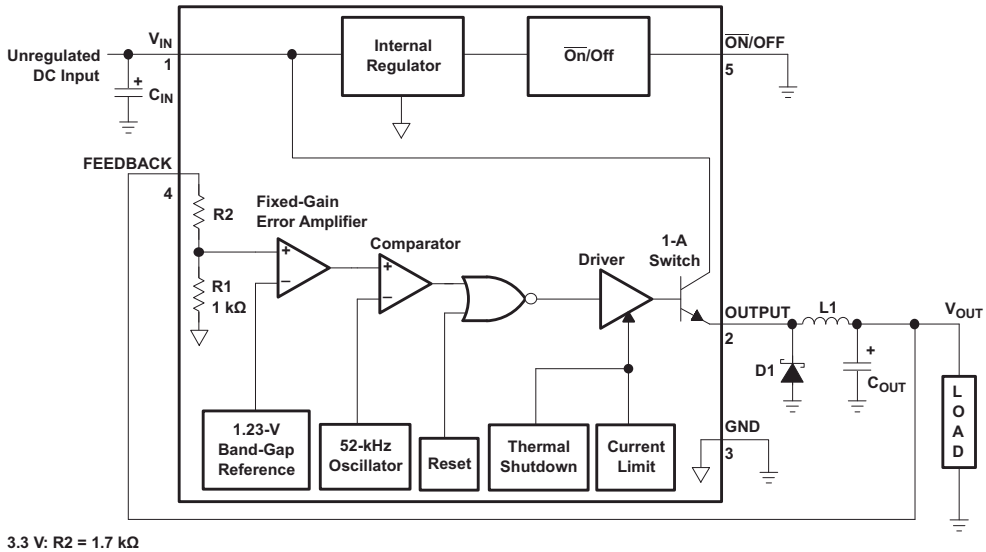

3.3 V: R2 = 1.7 kΩ
5 V: R2 = 3.1 kΩ
12 V: R2 = 8.84 kΩ
15 V: R2 = 11.3 kΩ
ADJ: R1 = Open, R2 = 0 Ω

Pin numbers are for the KTT (TO-263) package.

Functional Block Diagram

An IMPORTANT NOTICE at the end of this data sheet addresses availability, warranty, changes, use in safety-critical applications, intellectual property matters and other important disclaimers. PRODUCTION DATA.

Table of Contents

1 Features....1
2 Applications....1
3 Description....1
4 Revision History....2
5 Pin Configuration and Functions....3
6 Specifications....4
6.1 Absolute Maximum Ratings....4
6.2 ESD Ratings....4
6.3 Recommended Operating Conditions....4
6.4 Thermal Information....4
6.5 Electrical Characteristics — TL2575....5
6.6 Electrical Characteristics — TL2575HV....6
6.7 Typical Characteristics....8
7 Parameter Measurement Information....10
7.1 Test Circuits....10
8 Detailed Description....11
8.1 Overview....11
8.2 Functional Block Diagram....11
8.3 Feature Description....11
8.4 Device Functional Modes....12
9 Application and Implementation....13
9.1 Typical Application....13
10 Power Supply Recommendations....19
11 Layout....19
11.1 Layout Guidelines....19
11.2 Layout Example....19
12 Device and Documentation Support....20
12.1 Receiving Notification of Documentation Updates....20
12.2 Support Resources....20
12.3 Trademarks....20
12.4 Electrostatic Discharge Caution....20
12.5 Glossary....20
13 Mechanical, Packaging, and Orderable Information....20
13.1 Package Option Addendum....21

4 Revision History

Changes from Revision C (October 2014) to Revision D (June 2022) — **Page**

- Updated the numbering format for tables, figures, and cross-references throughout the document....1
- Updated applications....1

Changes from Revision B (January 2007) to Revision C (October 2014) — **Page**

- Updated document to new TI data sheet format....1
- Deleted Ordering Information table....1
- Added Pin Functions table....3
- Added ESD Ratings table....4
- Changed Thermal Information table....4
- Added Detailed Description section....11
- Added Application and Implementation section....13
- Added Power Supply Recommendations and Layout sections....19

Copyright © 2022 Texas Instruments Incorporated

5 Pin Configuration and Functions

KTT (TO-263) PACKAGE
(TOP VIEW)

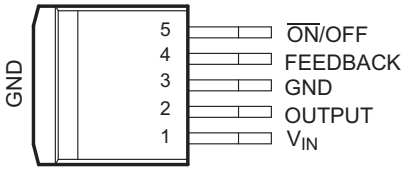

N (PDIP) PACKAGE
(TOP VIEW)

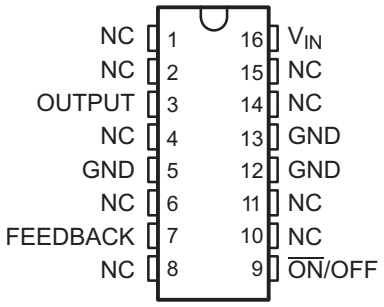

NC − No internal connection

KV (TO-220 STAGGERED LEADS) PACKAGE

(TOP VIEW) **(SIDE VIEW)**

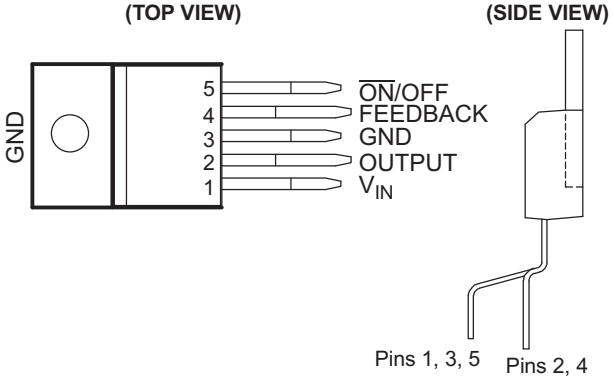

Table 5-1. Pin Functions

PIN				TYPE	DESCRIPTION
NAME	KTT TO-263	N PDIP	KV TO-220		
FEEDBACK	4	7	4	Input	Feedback pin. Connect to V_{OUT} for the fixed-voltage TL2575. Connect this pin between two adjustment resistors for the adjustable-voltage TL2575.
GND	3	5	3	—	Ground
		12			
		13			
NC	—	1	—	—	No connect
		2			
		4			
		6			
		8			
		10			
		11			
		14			
		15			
ON/OFF	5	9	5	Input	Manual shutdown pin
OUTPUT	2	3	2	Output	Output pin
V_{IN}	1	16	1	Input	Supply input pin

Copyright © 2022 Texas Instruments Incorporated

6 Specifications

6.1 Absolute Maximum Ratings

over operating free-air temperature range (unless otherwise noted)[1]

			MIN	MAX	UNIT
V_{IN}	Supply voltage	TL2575HV		60	V
		TL2575		42	
	$\overline{ON}$/OFF input voltage range		–0.3	V_{IN}	V
	Output voltage to GND (steady state)			–1	V
T_J	Maximum junction temperature			150	°C

(1) Stresses beyond those listed under *Absolute Maximum Ratings* may cause permanent damage to the device. These are stress ratings only, and functional operation of the device at these or any other conditions beyond those indicated under *Recommended Operating Conditions* is not implied. Exposure to absolute-maximum-rated conditions for extended periods may affect device reliability.

6.2 ESD Ratings

			MIN	MAX	UNIT
T_{stg}	Storage temperature range		–65	150	°C
$V_{(ESD)}$	Electrostatic discharge	Human body model (HBM), per ANSI/ESDA/JEDEC JS-001, all pins[1]	0	2000	V
		Charged device model (CDM), per JEDEC specification JESD22-C101, all pins[2]	0	1000	

(1) JEDEC document JEP155 states that 500-V HBM allows safe manufacturing with a standard ESD control process.
(2) JEDEC document JEP157 states that 250-V CDM allows safe manufacturing with a standard ESD control process.

6.3 Recommended Operating Conditions

over operating free-air temperature range (unless otherwise noted)

			MIN	MAX	UNIT
V_{IN}	Supply voltage	TL2575HV	4.75	60	V
		TL2575	4.75	40	
T_J	Operating virtual junction temperature		–40	125	°C

6.4 Thermal Information

THERMAL METRIC[1]		KTT	KV	N	UNIT
		5 PINS	5 PINS	16 PINS	
$R_{\theta JA}$	Junction-to-ambient thermal resistance	26.5	26.5	67	°C/W
$R_{\theta JC(top)}$	Junction-to-case (top) thermal resistance	31.8	31.8	57	
$R_{\theta JC(bot)}$	Junction-to-case (bottom) thermal resistance	0.38	0.38	—	

(1) For more information about traditional and new thermal metrics, see the *IC Package Thermal Metrics* application report.

Copyright © 2022 Texas Instruments Incorporated

6.5 Electrical Characteristics — TL2575

I_{LOAD} = 200 mA, V_{IN} = 12 V for 3.3-V, 5-V, and adjustable versions, V_{IN} = 25 V for 12-V version, V_{IN} = 30 V for 15-V version (unless otherwise noted) (see Figure 7-1)

PARAMETER			TEST CONDITIONS	T_J	TL2575			UNIT
					MIN	TYP	MAX	
V_{OUT}	Output voltage	TL2575-33	V_{IN} = 12 V, I_{LOAD} = 0.2 A	25°C	3.234	3.3	3.366	V
			4.75 V ≤ V_{IN} ≤ 40 V, 0.2 A ≤ I_{LOAD} ≤ 1 A	25°C	3.168	3.3	3.432	
				Full range	3.135		3.465	
		TL2575-05	V_{IN} = 12 V, I_{LOAD} = 0.2 A	25°C	4.9	5	5.1	
			8 V ≤ V_{IN} ≤ 40 V, 0.2 A ≤ I_{LOAD} ≤ 1 A	25°C	4.8	5	5.2	
				Full range	4.75		5.25	
		TL2575-12	V_{IN} = 25 V, I_{LOAD} = 0.2 A	25°C	11.76	12	12.24	
			15 V ≤ V_{IN} ≤ 40 V, 0.2 A ≤ I_{LOAD} ≤ 1 A	25°C	11.52	12	12.48	
				Full range	11.4		12.6	
		TL2575-15	V_{IN} = 30 V, I_{LOAD} = 0.2 A	25°C	14.7	15	15.3	
			18 V ≤ V_{IN} ≤ 40 V, 0.2 A ≤ I_{LOAD} ≤ 1 A	25°C	14.4	15	15.6	
				Full range	14.25	15	15.75	
	Feedback voltage	TL2575-ADJ	V_{IN} = 12 V, V_{OUT} = 5 V, I_{LOAD} = 0.2 A	25°C	1.217	1.23	1.243	V
			8 V ≤ V_{IN} ≤ 40 V, V_{OUT} = 5 V, 0.2 A ≤ I_{LOAD} ≤ 1 A	25°C	1.193	1.23	1.267	
				Full range	1.18		1.28	
η	Efficiency	TL2575-33	V_{IN} = 12 V, I_{LOAD} = 1 A	25°C		75%		
		TL2575-05	V_{IN} = 12 V, I_{LOAD} = 1 A			77%		
		TL2575-12	V_{IN} = 15 V, I_{LOAD} = 1 A			88%		
		TL2575-15	V_{IN} = 18 V, I_{LOAD} = 1 A			88%		
		TL2575-ADJ	V_{IN} = 12 V, V_{OUT} = 5 V, I_{LOAD} = 1 A			77%		
I_{IB}	Feedback bias current		V_{OUT} = 5 V (ADJ version only)	25°C		50	100	nA
				Full range			500	
f_o	Oscillator frequency(1)			25°C	47	52	58	kHz
				Full range	42		63	
V_{SAT}	Saturation voltage		I_{OUT} = 1 A(2)	25°C		0.9	1.2	V
				Full range			1.4	
	Maximum duty cycle(3)			25°C	93%	98%		
I_{CL}	Switch peak current(1) (2)			25°C	1.7	2.8	3.6	A
				Full range	1.3		4	
I_L	Output leakage current		V_{IN} = 40(4), Output = 0 V	25°C			2	mA
			V_{IN} = 40(4), Output = –1 V			7.5	30	
I_Q	Quiescent current(4)			25°C		5	10	mA
I_{STBY}	Standby quiescent current		OFF ($\overline{ON}$/OFF = 5 V)	25°C		50	200	μA

I_{LOAD} = 200 mA, V_{IN} = 12 V for 3.3-V, 5-V, and adjustable versions, V_{IN} = 25 V for 12-V version, V_{IN} = 30 V for 15-V version (unless otherwise noted) (see Figure 7-1)

PARAMETER		TEST CONDITIONS	T_J	TL2575			UNIT
				MIN	TYP	MAX	
V_{IH}	$\overline{ON}$/OFF high-level logic input voltage	OFF (V_{OUT} = 0 V)	25°C	2.2	1.4		V
			Full range	2.4			
V_{IL}	$\overline{ON}$/OFF low-level logic input voltage	ON (V_{OUT} = nominal voltage)	25°C		1.2	1	V
			Full range			0.8	
I_{IH}	$\overline{ON}$/OFF high-level input current	OFF ($\overline{ON}$/OFF = 5 V)	25°C		12	30	μA
I_{IL}	$\overline{ON}$/OFF low-level input current	ON ($\overline{ON}$/OFF = 0 V)	25°C		0	10	μA

(1) In the event of an output short or an overload condition, self-protection features lower the oscillator frequency to ≈18 kHz and the minimum duty cycle from 5% to ≈2%. The resulting output voltage drops to ≈40% of its nominal value, causing the average power dissipated by the IC to lower.
(2) Output is not connected to diode, inductor, or capacitor. Output is sourcing current.
(3) FEEDBACK is disconnected from output and connected to 0 V.
(4) To force the output transistor off, FEEDBACK is disconnected from output and connected to 12 V for the adjustable, 3.3-V, and 5-V versions and to 25 V for the 12-V and 15-V versions.

6.6 Electrical Characteristics — TL2575HV

I_{LOAD} = 200 mA, V_{IN} = 12 V for 3.3-V, 5-V, and adjustable versions, V_{IN} = 25 V for 12-V version, V_{IN} = 30 V for 15-V version (unless otherwise noted) (see Figure 7-1)

PARAMETER			TEST CONDITIONS	T_J	TL2575HV			UNIT
					MIN	TYP	MAX	
V_{OUT}	Output voltage	TL2575HV-33	V_{IN} = 12 V, I_{LOAD} = 0.2 A	25°C	3.234	3.3	3.366	V
			4.75 V ≤ V_{IN} ≤ 60 V, 0.2 A ≤ I_{LOAD} ≤ 1 A	25°C	3.168	3.3	3.450	
				Full range	3.135		3.482	
		TL2575HV-05	V_{IN} = 12 V, I_{LOAD} = 0.2 A	25°C	4.9	5	5.1	
			8 V ≤ V_{IN} ≤ 60 V, 0.2 A ≤ I_{LOAD} ≤ 1 A	25°C	4.8	5	5.225	
				Full range	4.75		5.275	
		TL2575HV-12	V_{IN} = 25 V, I_{LOAD} = 0.2 A	25°C	11.76	12	12.24	
			15 V ≤ V_{IN} ≤ 60 V, 0.2 A ≤ I_{LOAD} ≤ 1 A	25°C	11.52	12	12.54	
				Full range	11.4		12.66	
		TL2575HV-15	V_{IN} = 30 V, I_{LOAD} = 0.2 A	25°C	14.7	15	15.3	
			18 V ≤ V_{IN} ≤ 60 V, 0.2 A ≤ I_{LOAD} ≤ 1 A	25°C	14.4	15	15.68	
				Full range	14.25	15	15.83	
	Feedback voltage	TL2575HV-ADJ	V_{IN} = 12 V, V_{OUT} = 5 V, I_{LOAD} = 0.2 A	25°C	1.217	1.23	1.243	V
			8 V ≤ V_{IN} ≤ 60 V, V_{OUT} = 5 V, 0.2 A ≤ I_{LOAD} ≤ 1 A	25°C	1.193	1.23	1.273	
				Full range	1.180		1.286	
η	Efficiency	TL2575HV-33	V_{IN} = 12 V, I_{LOAD} = 1 A	25°C		75%		
		TL2575HV-05	V_{IN} = 12 V, I_{LOAD} = 1 A			77%		
		TL2575HV-12	V_{IN} = 15 V, I_{LOAD} = 1 A			88%		
		TL2575HV-15	V_{IN} = 18 V, I_{LOAD} = 1 A			88%		
		TL2575HV-ADJ	V_{IN} = 12 V, V_{OUT} = 5 V, I_{LOAD} = 1 A			77%		
I_{IB}	Feedback bias current		V_{OUT} = 5 V (ADJ version only)	25°C		50	100	nA
				Full range			500	
f_o	Oscillator frequency(1)			25°C	47	52	58	kHz
				Full range	42		63	

Copyright © 2022 Texas Instruments Incorporated

I_{LOAD} = 200 mA, V_{IN} = 12 V for 3.3-V, 5-V, and adjustable versions, V_{IN} = 25 V for 12-V version, V_{IN} = 30 V for 15-V version (unless otherwise noted) (see Figure 7-1)

PARAMETER		TEST CONDITIONS	T_J	TL2575HV			UNIT
				MIN	TYP	MAX	
V_{SAT}	Saturation voltage	I_{OUT} = 1 A[2]	25°C		0.9	1.2	V
			Full range			1.4	
	Maximum duty cycle[3]		25°C	93%	98%		
I_{CL}	Switch peak current[1] [2]		25°C	1.7	2.8	3.6	A
			Full range	1.3		4	
I_L	Output leakage current	V_{IN} = 60[4], Output = 0 V	25°C			2	mA
		V_{IN} = 60[4], Output = –1 V			7.5	30	
I_Q	Quiescent current[4]		25°C		5	10	mA
I_{STBY}	Standby quiescent current	OFF ($\overline{ON}$/OFF = 5 V)	25°C		50	200	μA
V_{IH}	$\overline{ON}$/OFF high-level logic input voltage	OFF (V_{OUT} = 0 V)	25°C	2.2	1.4		V
			Full range	2.4			
V_{IL}	$\overline{ON}$/OFF low-level logic input voltage	ON (V_{OUT} = nominal voltage)	25°C		1.2	1	V
			Full range			0.8	
I_{IH}	$\overline{ON}$/OFF high-level input current	OFF ($\overline{ON}$/OFF = 5 V)	25°C		12	30	μA
I_{IL}	$\overline{ON}$/OFF low-level input current	ON ($\overline{ON}$/OFF = 0 V)			0	10	μA

(1) In the event of an output short or an overload condition, self-protection features lower the oscillator frequency to ≈18 kHz and the minimum duty cycle from 5% to ≈2%. The resulting output voltage drops to ≈40% of its nominal value, causing the average power dissipated by the IC to lower.
(2) Output is not connected to diode, inductor, or capacitor. Output is sourcing current.
(3) FEEDBACK is disconnected from output and connected to 0 V.
(4) To force the output transistor off, FEEDBACK is disconnected from output and connected to 12 V for the adjustable, 3.3-V, and 5-V versions and to 25 V for the 12-V and 15-V versions.

Copyright © 2022 Texas Instruments Incorporated

6.7 Typical Characteristics

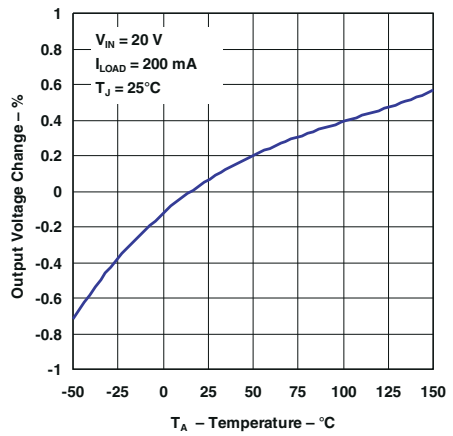

Figure 6-1. Normalized Output Voltage

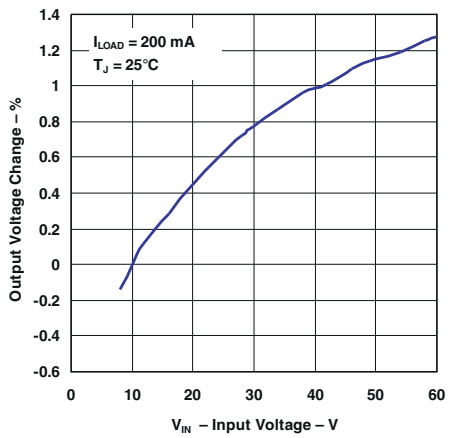

Figure 6-2. Line Regulation

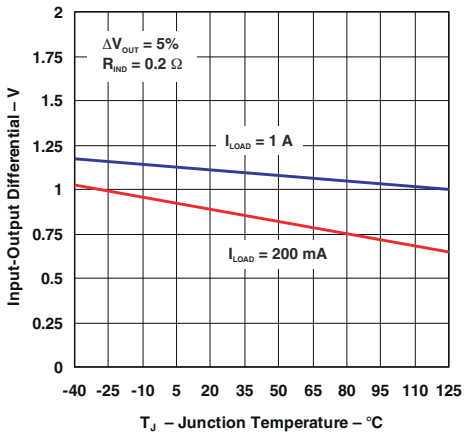

Figure 6-3. Dropout Voltage

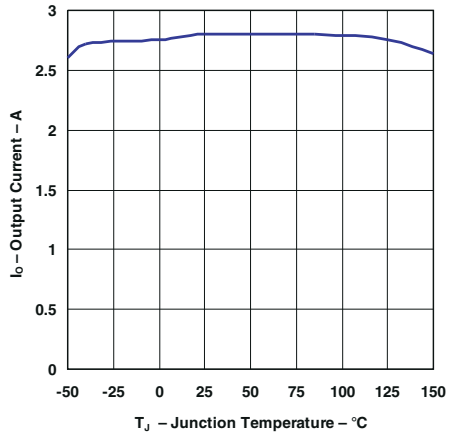

Figure 6-4. Current Limit

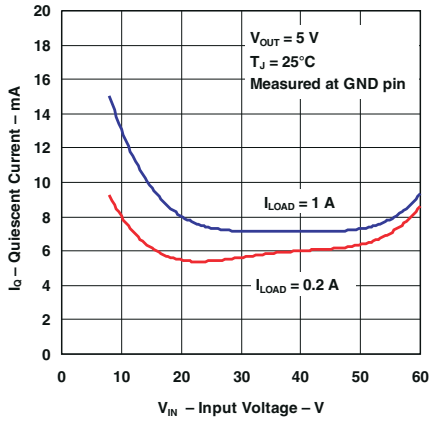

Figure 6-5. Quiescent Current

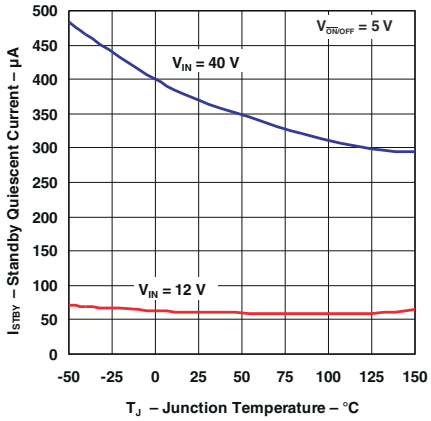

Figure 6-6. Standby Quiescent Current

Copyright © 2022 Texas Instruments Incorporated

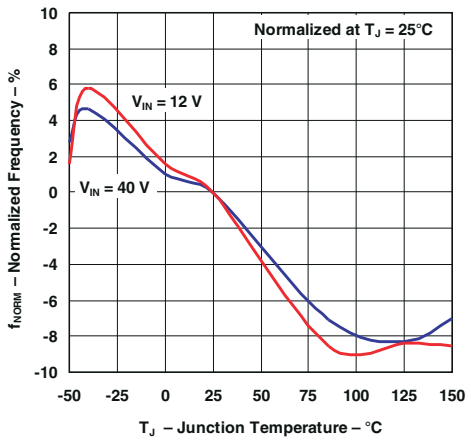

Figure 6-7. Oscillator Frequency

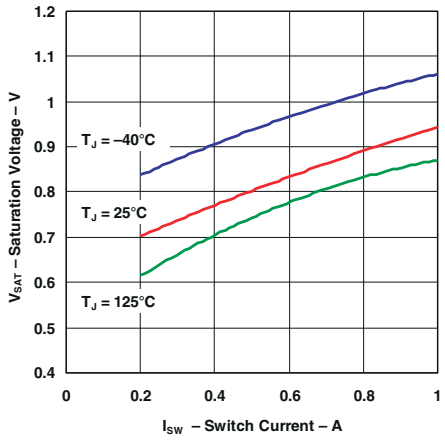

Figure 6-8. Switch Saturation Voltage

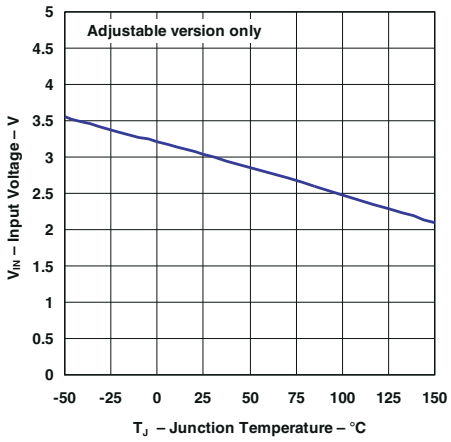

Figure 6-9. Minimum Operating Voltage

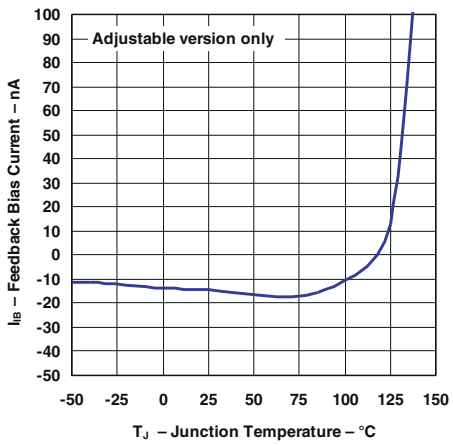

Figure 6-10. FEEDBACK Current

7 Parameter Measurement Information

7.1 Test Circuits

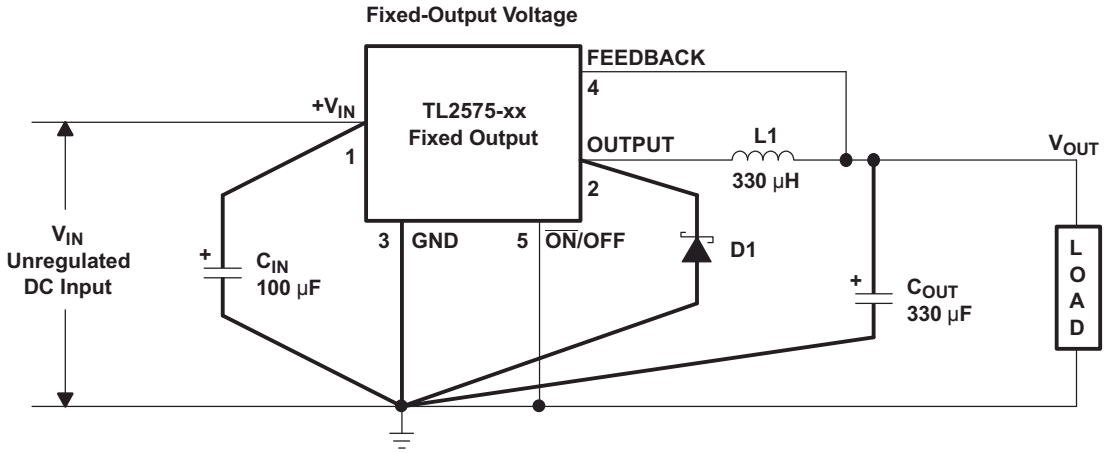

C_{IN} = 100 µF, Aluminum Electrolytic
C_{OUT} = 330 µF, Aluminum Electrolytic
D1 = Schottky
L1 = 330 µH (for 5-V V_{IN} with 3.3-V V_{OUT}, use 100 µH)

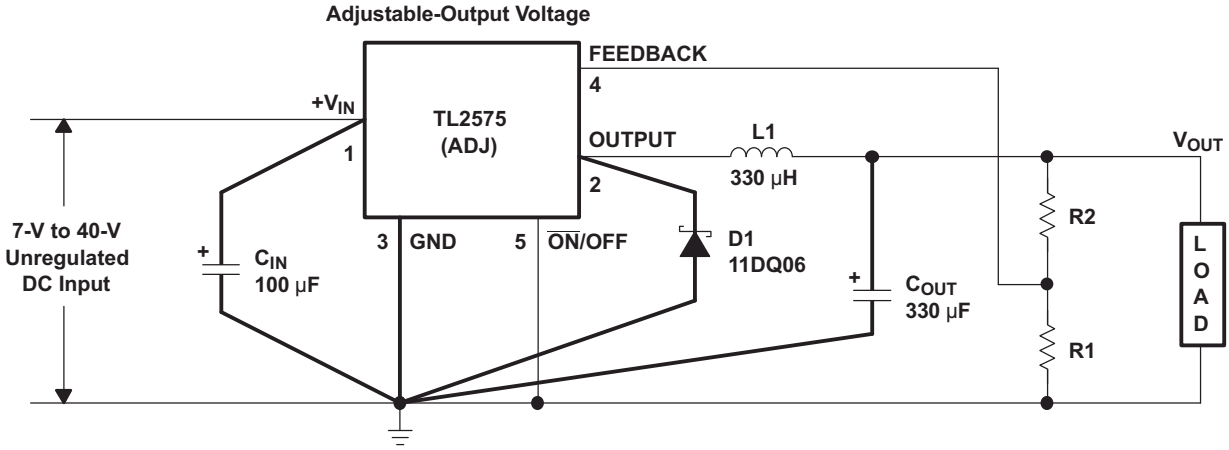

$V_{OUT} = V_{REF}$ (1 + R2 / R1) = 5 V

V_{REF} = 1.23 V
R1 = 2 kΩ
R2 = 6.12 kΩ

Pin numbers are for the KTT (TO-263) package.

Figure 7-1. Test Circuits and Layout Guidelines

Copyright © 2022 Texas Instruments Incorporated

8 Detailed Description

8.1 Overview

The TL2575 and TL2575HV devices greatly simplify the design of switching power supplies by conveniently providing all the active functions needed for a step-down (buck) switching regulator in an integrated circuit. Accepting a wide input-voltage range of up to 60 V (TL2575-HV) and available in fixed output voltages of 3.3 V, 5 V, 12 V, 15 V, or an adjustable-output version, the TL2575 and TL2575HV devices have an integrated switch capable of delivering 1 A of load current, with excellent line and load regulation. The device also offers internal frequency compensation, a fixed-frequency oscillator, cycle-by-cycle current limiting, and thermal shutdown. In addition, a manual shutdown is available via an external $\overline{\text{ON}}$/OFF pin.

The TL2575 and TL2575HV devices represent superior alternatives to popular three-terminal linear regulators. Due to their high efficiency, the devices significantly reduce the size of the heatsink and, in many cases, no heatsink is required. Optimized for use with standard series of inductors available from several different manufacturers, the TL2575 and TL2575HV greatly simplify the design of switch-mode power supplies by requiring a minimal addition of only four to six external components for operation.

The TL2575 and TL2575HV devices are characterized for operation over the virtual junction temperature range of –40°C to 125°C.

8.2 Functional Block Diagram

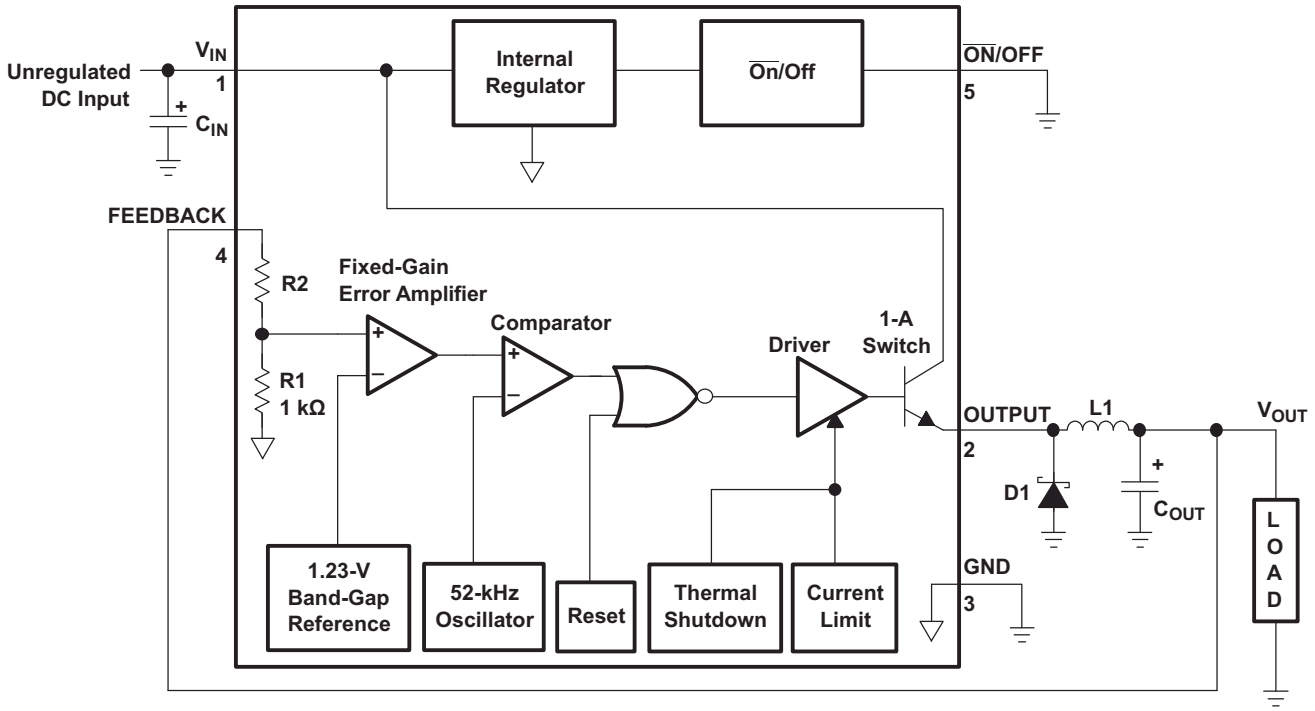

3.3 V: R2 = 1.7 kΩ
5 V: R2 = 3.1 kΩ
12 V: R2 = 8.84 kΩ
15 V: R2 = 11.3 kΩ
ADJ: R1 = Open, R2 = 0 Ω

Pin numbers are for the KTT (TO-263) package.

8.3 Feature Description

8.3.1 Feedback Connection

For fixed-voltage options, FEEDBACK must be wired to V_{OUT}. For the adjustable version, FEEDBACK must be connected between the two programming resistors. Again, both of these resistors should be in close proximity to the regulator, and each should be less than 100 kΩ to minimize noise pickup.

8.3.2 $\overline{\text{ON}}$/OFF Input

$\overline{\text{ON}}$/OFF should be grounded or be a low-level TTL voltage (typically < 1.6 V) for normal operation. To shut down the TL2575 or TL2575HV devices and place in standby mode, a high-level TTL or CMOS voltage should be supplied to this pin. $\overline{\text{ON}}$/OFF should not be left open and safely can be pulled up to V_{IN} with or without a pullup resistor.

8.4 Device Functional Modes

8.4.1 Standby Mode

When a high-level TTL or CMOS voltage is applied to the $\overline{\text{ON}}$/OFF pin, the device enters standby mode, drawing a typical quiescent current of 50 µA.

Copyright © 2022 Texas Instruments Incorporated

9 Application and Implementation

Note

Information in the following applications sections is not part of the TI component specification, and TI does not warrant its accuracy or completeness. TI's customers are responsible for determining suitability of components for their purposes. Customers should validate and test their design implementation to confirm system functionality.

9.1 Typical Application

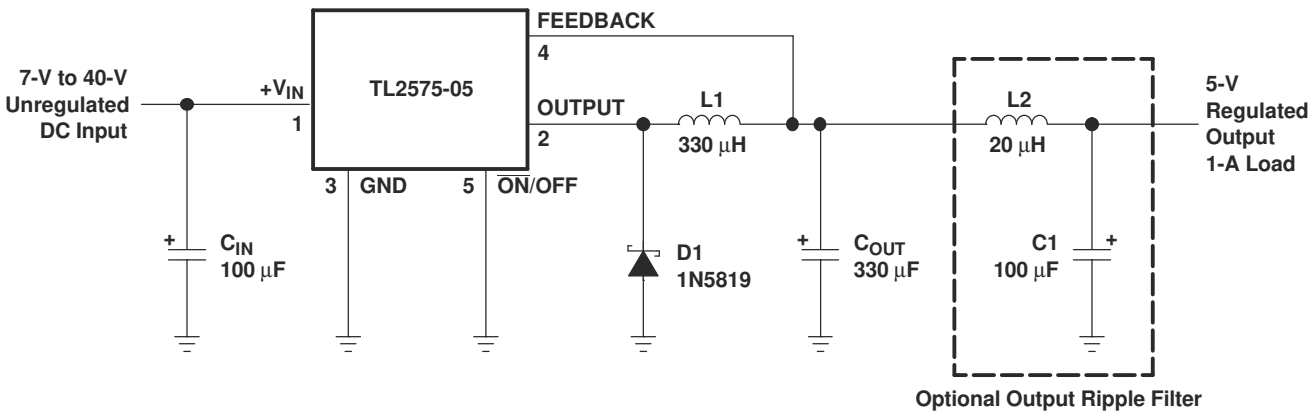

Pin numbers are for the KTT (TO-263) package.

Figure 9-1. Typical Application Circuit (Fixed Version)

9.1.1 Design Requirements

- Input capacitor for stability
- Output capacitor for loop stability and ripple filtering
- Catch diode to filter noise
- Output inductor depending on the mode of operation

9.1.2 Detailed Design Procedure

9.1.2.1 Input Capacitor (C_{IN})

For stability concerns, an input bypass capacitor (electrolytic, $C_{IN} \geq 47$ µF) needs to be located as close as possible to the regulator. For operating temperatures below –25°C, C_{IN} may need to be larger in value. In addition, since most electrolytic capacitors have decreasing capacitances and increasing ESR as temperature drops, adding a ceramic or solid tantalum capacitor in parallel increases the stability in cold temperatures.

To extend the capacitor operating lifetime, the capacitor RMS ripple current rating should be calculated as shown in Equation 1.

$$I_{C,RMS} > 1.2\,(t_{on} / T)\,I_{LOAD} \quad (1)$$

where

- $t_{on}/T = V_{OUT}/V_{IN}$ {buck regulator}
- $t_{on}/T = |V_{OUT}|/(|V_{OUT}| + V_{IN})$ {buck-boost regulator}

9.1.2.2 Output Capacitor (C_{OUT})

For both loop stability and filtering of ripple voltage, an output capacitor is required, again in close proximity to the regulator. For best performance, low-ESR aluminum electrolytics are recommended, although standard aluminum electrolytics may be adequate for some applications as shown in Equation 2.

$$\text{Output ripple voltage} = (\text{ESR of } C_{OUT}) \times (\text{inductor ripple current}) \quad (2)$$

Output ripple of 50 mV to 150 mV typically can be achieved with capacitor values of 220 µF to 680 µF. Larger C_{OUT} can reduce the ripple 20 mV to 50 mV peak to peak. To improve further on output ripple, paralleling of standard electrolytic capacitors may be used. Alternatively, higher-grade capacitors such as high frequency, low inductance, or low ESR can be used.

The following should be taken into account when selecting C_{OUT}:

- At cold temperatures, the ESR of the electrolytic capacitors can rise dramatically (typically 3× nominal value at –25°C). Because solid-tantalum capacitors have significantly better ESR specifications at cold temperatures, they should be used at operating temperature lower than –25°C. As an alternative, tantalums can also be paralleled to aluminum electrolytics and should contribute 10% to 20% to the total capacitance.
- Low ESR for C_{OUT} is desirable for low output ripple. However, the ESR should be greater than 0.05 Ω to avoid the possibility of regulator instability. Hence, a sole tantalum capacitor used for C_{OUT} is most susceptible to this occurrence.
- The ripple current rating of the capacitor, 52 kHz, should be at least 50% higher than the peak-to-peak inductor ripple current.

9.1.2.3 Catch Diode

As with other external components, the catch diode should be placed close to the output to minimize unwanted noise. Schottky diodes have fast switching speeds and low forward voltage drops and, thus, offer the best performance, especially for switching regulators with low output voltages (V_{OUT} < 5 V). If a high-efficiency, fast-recovery, or ultra-fast-recovery diode is used in place of a Schottky, it should have a soft recovery (versus abrupt turn-off characteristics) to avoid the chance of causing instability and EMI. Standard 50- to 60-Hz diodes, such as the 1N4001 or 1N5400 series, are not suitable.

9.1.2.4 Inductor

Proper inductor selection is key to the performance-switching power-supply designs. One important factor to consider is whether the regulator is used in continuous mode (inductor current flows continuously and never drops to zero) or in discontinuous mode (inductor current goes to zero during the normal switching cycle). Each mode has distinctively different operating characteristics and, therefore, can affect the regulator performance and requirements. In many applications, the continuous mode is the preferred mode of operation, since it offers greater output power with lower peak currents, and also can result in lower output ripple voltage. The advantages of continuous mode of operation come at the expense of a larger inductor required to keep inductor current continuous, especially at low output currents and/or high input voltages.

The TL2575 and TL2575HV devices can operate in either continuous or discontinuous mode. With heavy load currents, the inductor current flows continuously and the regulator operates in continuous mode. Under light load, the inductor fully discharges and the regulator is forced into the discontinuous mode of operation. For light loads (approximately 200 mA or less), this discontinuous mode of operation is perfectly acceptable and may be desirable solely to keep the inductor value and size small. Any buck regulator eventually operates in discontinuous mode when the load current is light enough.

The type of inductor chosen can have advantages and disadvantages. If high performance or high quality is a concern, then more-expensive toroid core inductors are the best choice, as the magnetic flux is contained completely within the core, resulting in less EMI and noise in nearby sensitive circuits. Inexpensive bobbin core inductors, however, generate more EMI as the open core does not confine the flux within the core. Multiple switching regulators located in proximity to each other are particularly susceptible to mutual coupling of magnetic fluxes from each other's open cores. In these situations, closed magnetic structures (such as a toroid, pot core, or E-core) are more appropriate.

Regardless of the type and value of inductor used, the inductor never should carry more than its rated current. Doing so may cause the inductor to saturate, in which case the inductance quickly drops, and the inductor looks like a low-value resistor (from the dc resistance of the windings). As a result, switching current rises dramatically (until limited by the current-by-current limiting feature of the TL2575 and TL2575HV devices) and can result in overheating of the inductor and the IC itself.

Copyright © 2022 Texas Instruments Incorporated

Note

Different types of inductors have different saturation characteristics.

9.1.2.5 Output Voltage Ripple and Transients

As with any switching power supply, the output of the TL2575 and TL2575HV devices have a sawtooth ripple voltage at the switching frequency. Typically about 1% of the output voltage, this ripple is due mainly to the inductor sawtooth ripple current and the ESR of the output capacitor (see Section 9.1.2.2). Furthermore, the output also may contain small voltage spikes at the peaks of the sawtooth waveform. This is due to the fast switching of the output switch and the parasitic inductance of C_{OUT}. These voltage spikes can be minimized through the use of low-inductance capacitors.

There are several ways to reduce the output ripple voltage: a larger inductor, a larger C_{OUT}, or both. Another method is to use a small LC filter (20 µH and 100 µF) at the output. This filter can reduce the output ripple voltage by a factor of 10 (see Figure 7-1).

9.1.2.6 Grounding

The power and ground connections of the TL2575 and TL2575HV devices must be low impedance to help maintain output stability. For the 5-pin packages, both pin 3 and tab are ground, and either connection can be used as they are both part of the same lead frame. With the 16-pin package, all the ground pins (including signal and power grounds) should be soldered directly to wide PCB copper traces to ensure low-inductance connections and good thermal dissipation.

9.1.2.7 Reverse Current Considerations

There is an internal diode from the output to VIN. Therefore, the device does not protect against reverse current and care must be taken to limit current in this scenario.

9.1.2.8 Buck Regulator Design Procedure

PROCEDURE (Fixed Output)	EXAMPLE (Fixed Output)
Known: V_{OUT} = 3.3 V, 5 V, 12 V, or 15 V $V_{IN(Max)}$ = Maximum input voltage $I_{LOAD(Max)}$ = Maximum load current	**Known:** V_{OUT} = 5 V $V_{IN(Max)}$ = 20 V $I_{LOAD(Max)}$ = 1 A
1. Inductor Selection (L1) **A.** From Figure 9-2 through Figure 9-5, select the appropriate inductor code based on the intersection of $V_{IN(Max)}$ and $I_{LOAD(Max)}$. **B.** The inductor chosen should be rated for operation at 52-kHz and have a current rating of at least 1.15 × $I_{LOAD(Max)}$ to allow for the ripple current. The actual peak current in L1 (in normal operation) can be calculated as follows: $I_{L1(pk)} = I_{LOAD(Max)} + (V_{IN} – V_{OUT}) \times t_{on} / 2L1$ Where $t_{on} = V_{OUT} / V_{IN} \times (1 / f_{osc})$	**1. Inductor Selection (L1)** **A.** From Figure 9-3 (TL2575-05), the intersection of 20-V line and 1-A line gives an inductor code of L330. **B.** L330 → L1 = 330 µH Choose from: 34042 (Schott) PE-52627 (Pulse Engineering) RL1952 (Renco)
2. Output Capacitor Selection (C_{OUT}) **A.** The TL2575 control loop has a two-pole two-zero frequency response. The dominant pole-zero pair is established by C_{OUT} and L1. To meet stability requirements while maintaining an acceptable output ripple voltage ($V_{ripple} \neq 0.01 \times V_{OUT}$), the recommended range for a standard aluminum electrolytic C_{OUT} is between 100 µF and 470 µF.	**2. Output Capacitor Selection (C_{OUT})** **A.** C_{OUT} = 100-µF to 470-µF, standard aluminum electrolytic

PROCEDURE (Fixed Output)	EXAMPLE (Fixed Output)
B. C_{OUT} should have a voltage rating of at least 1.5 × V_{OUT}. But if a low output ripple voltage is desired, choose capacitors with a higher-voltage ratings than the minimum required, due to their typically lower ESRs.	**B.** Although a C_{OUT} rated at 8 V is sufficient for V_{OUT} = 5 V, a higher-voltage capacitor is chosen for its typically lower ESR (and hence lower output ripple voltage) → Capacitor voltage rating = 20 V.
3. Catch Diode Selection (D1) (see Table 9-1) **A.** In normal operation, the catch diode requires a current rating of at least 1.2 × $I_{LOAD(Max)}$. For the most robust design, D1 should be rated to handle a current equal to the TL2575 maximum switch peak current; this represents the worst-case scenario of a continuous short at V_{OUT}. **B.** The diode requires a reverse voltage rating of at least 1.25 × $V_{IN(Max)}$.	**3. Catch Diode Selection (D1) (see Table 9-1)** **A.** Pick a diode with 3-A rating. **B.** Pick 30-V rated Schottky diode (1N5821, MBR330, 31QD03, or SR303) or 100-V rated Fast Recovery diode (31DF1, MURD310, or HER302).
4. Input Capacitor (C_{IN}) An aluminum electrolytic or tantalum capacitor is needed for input bypassing. Locate C_{IN} as close to the V_{IN} and GND pins as possible.	**4. Input Capacitor (C_{IN})** C_{IN} = 100 µF, 25 V, aluminum electrolytic

PROCEDURE (Adjustable Output)	EXAMPLE (Adjustable Output)
Known: $V_{OUT(Nom)}$ $V_{IN(Max)}$ = Maximum input voltage $I_{LOAD(Max)}$ = Maximum load current	**Known:** V_{OUT} = 10 V $V_{IN(Max)}$ = 25 V $I_{LOAD(Max)}$ = 1 A
1. Programming Output Voltage (Selecting R1 and R2) Referring to Figure 6-2, V_{OUT} is defined by: $V_{OUT} = V_{REF}\left(1 + \frac{R2}{R1}\right)$ where V_{REF} = 1.23 V Choose a value for R1 between 1 kΩ and 5 kΩ (use 1% metal-film resistors for best temperature coefficient and stability over time). $R2 = R1\left(\frac{V_{OUT}}{V_{REF}} - 1\right)$	**1. Programming Output Voltage (Selecting R1 and R2)** Select R1 = 1 kΩ R2 = 1 (10 / 1.23 – 1) = 7.13 kΩ Select R2 = 7.15 kΩ (closest 1% value)
2. Inductor Selection (L1) **A.** Calculate the "set" volts-second (E × T) across L1: E × T = (V_{IN} – V_{OUT}) × t_{on} E × T = (V_{IN} – V_{OUT}) × (V_{OUT} / V_{IN}) × {1000 / f_{osc}(in kHz)} [V × µs] **Note** **NOTE:** Along with I_{LOAD}, the "set" volts-second (E × T) constant establishes the minimum energy storage requirement for the inductor. **B.** Using Figure 9-6, select the appropriate inductor code based on the intersection of E × T value and $I_{LOAD(Max)}$. **C.** The inductor chosen should be rated for operation at 52-kHz and have a current rating of at least 1.15 x $I_{LOAD(Max)}$ to allow for the ripple current. The actual peak current in L1 (in normal operation) can be calculated as follows: $I_{L1(pk)}$ = $I_{LOAD(Max)}$ + (V_{IN} – V_{OUT}) × t_{on} / 2L1 Where t_{on} = V_{OUT} / V_{IN} × (1 / f_{osc})	**2. Inductor Selection (L1)** **A.** Calculate the "set" volts-second (E × T) across L1: E × T = (25 – 10) × (10 / 25) × (1000 / 52) [V × µs] E × T = 115 V × µs **B.** Using Figure 9-6, the intersection of 115 V • µs and 1 A corresponds to an inductor code of H470. **C.** H470 → L1 = 470 µH Choose from: 34048 (Schott) PE-53118 (Pulse Engineering) RL1961 (Renco)
3. Output Capacitor Selection (C_{OUT})	**3. Output Capacitor Selection (C_{OUT})**

Copyright © 2022 Texas Instruments Incorporated

PROCEDURE (Adjustable Output)	EXAMPLE (Adjustable Output)
A. The TL2575 control loop has a two-pole two-zero frequency response. The dominant pole-zero pair is established by C_{OUT} and L1. To meet stability requirements, C_{OUT} must meet the following requirement: $C_{OUT} \geq 7758 \frac{V_{IN(Max)}}{V_{OUT} \bullet L1(\mu H)} (\mu F)$ However, C_{OUT} may need to be several times larger than the calculated value above in order to achieve an acceptable output ripple voltage of ~0.01 × V_{OUT}. **B.** C_{OUT} should have a voltage rating of at least 1.5 × V_{OUT}. But if a low output ripple voltage is desired, choose capacitors with a higher voltage ratings than the minimum required due to their typically lower ESRs.	**A.** $C_{OUT} \geq 7785 \times 25 / (10 \times 470)$ [µF] $C_{OUT} \geq 41.4$ µF To obtain an acceptable output voltage ripple → C_{OUT} = 220 µF electrolytic
4. Catch Diode Selection (D1) (see Table 9-1) **A.** In normal operation, the catch diode requires a current rating of at least 1.2 × $I_{LOAD(Max)}$. For the most robust design, D1 should be rated for a current equal to the TL2575 maximum switch peak current; this represents the worst-case scenario of a continuous short at V_{OUT}. **B.** The diode requires a reverse voltage rating of at least 1.25 × $V_{IN(Max)}$.	**4. Catch Diode Selection (D1) (see Table 9-1)** **A.** Pick a diode with a 3-A rating. **B.** Pick a 40-V rated Schottky diode (1N5822, MBR340, 31QD04, or SR304) or 100-V rated Fast Recovery diode (31DF1, MURD310, or HER302)
5. Input Capacitor (C_{IN}) An aluminum electrolytic or tantalum capacitor is needed for input bypassing. Locate C_{IN} as close to V_{IN} and GND pins as possible.	**5. Input Capacitor (C_{IN})** C_{IN} = 100 µF, 35 V, aluminum electrolytic

Table 9-1. Diode Selection Guide

V_R	SCHOTTKY		FAST RECOVERY	
	1A	3A	1A	3A
20 V	1N5817 MBR120P SR102	1N5820 MBR320 SR302	The following diodes are all rated to 100 V: 11DF1 MUR110 HER102	The following diodes are all rated to 100 V: 31DF1 MURD310 HER302
30 V	1N5818 MBR130P 11DQ03 SR103	1N5821 MBR330 31DQ03 SR303		
40 V	1N5819 MBR140P 11DQ04 SR104	IN5822 MBR340 31DQ04 SR304		
50 V	MBR150 11DQ05 SR105	MBR350 31DQ05 SR305		
60 V	MBR160 11DQ06 SR106	MBR360 31DQ06 SR306		

9.1.2.9 Inductor Selection Guide

Inductor Value Selection Guide for Continuous-Mode Operation

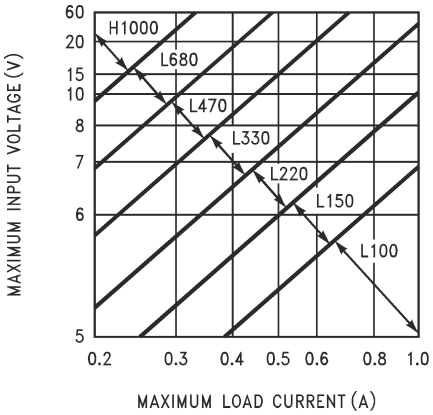

Figure 9-2. TL2575-33

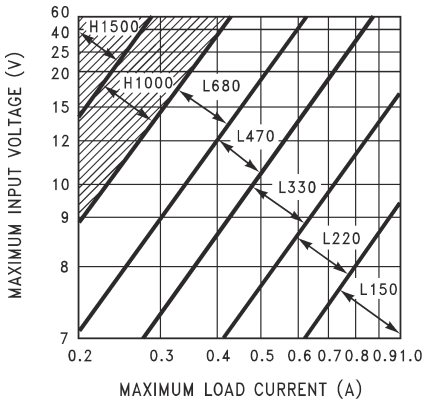

Figure 9-3. TL2575-50

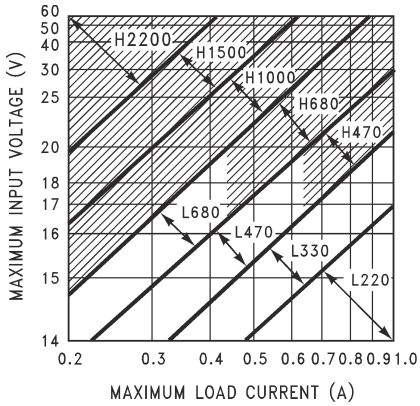

Figure 9-4. TL2575-12

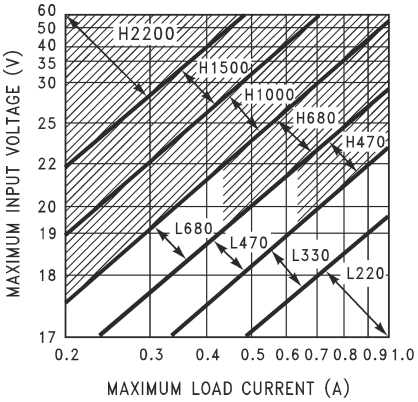

Figure 9-5. TL2575-15

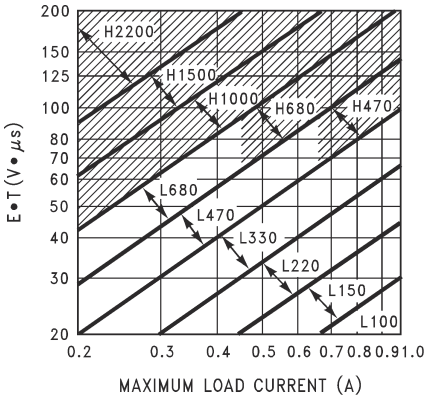

Figure 9-6. TL2575-ADJ

Copyright © 2022 Texas Instruments Incorporated

9.1.3 Application Curves

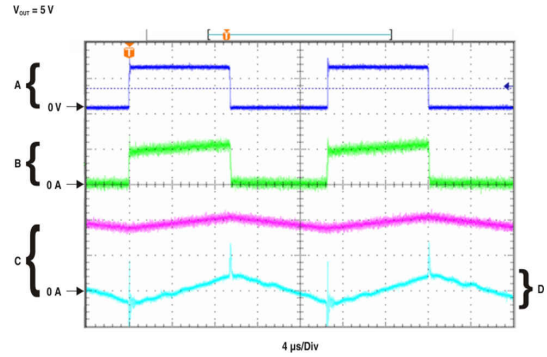

Output ripple voltage: 20 mV/div

Figure 9-7. Switching Waveforms

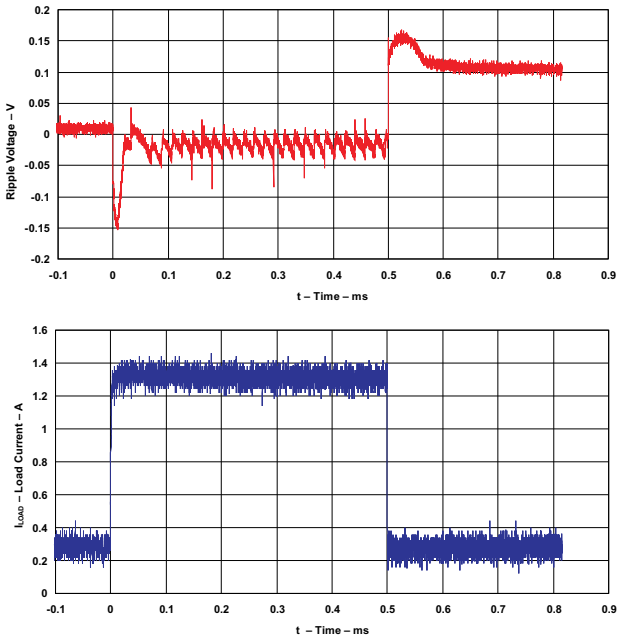

Inductor value selection guide for continuous-mode operation

Figure 9-8. Load Transient Response

10 Power Supply Recommendations

This device operates with a power supply range of 4.75 V to 40 V (60 V for the TL2575-HV). A 100-µF decoupling capacitor is recommended on the input to filter noise.

11 Layout

11.1 Layout Guidelines

With any switching regulator, circuit layout plays an important role in circuit performance. Wiring and parasitic inductances, as well as stray capacitances, are subjected to rapidly switching currents, which can result in unwanted voltage transients. To minimize inductance and ground loops, the length of the leads indicated by heavy lines should be minimized. Optimal results can be achieved by single-point grounding (see Figure 7-1) or by ground-plane construction. For the same reasons, the two programming resistors used in the adjustable version should be located as close as possible to the regulator to keep the sensitive feedback wiring short.

11.2 Layout Example

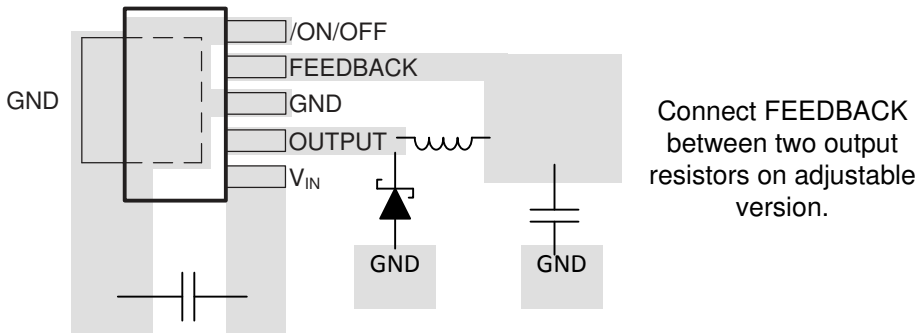

Figure 11-1. Layout Diagram (KV Package)

12 Device and Documentation Support

12.1 Receiving Notification of Documentation Updates

To receive notification of documentation updates, navigate to the device product folder on ti.com. Click on *Subscribe to updates* to register and receive a weekly digest of any product information that has changed. For change details, review the revision history included in any revised document.

12.2 Support Resources

TI E2E™ support forums are an engineer's go-to source for fast, verified answers and design help — straight from the experts. Search existing answers or ask your own question to get the quick design help you need.

Linked content is provided "AS IS" by the respective contributors. They do not constitute TI specifications and do not necessarily reflect TI's views; see TI's Terms of Use.

12.3 Trademarks

TI E2E™ is a trademark of Texas Instruments.
All trademarks are the property of their respective owners.

12.4 Electrostatic Discharge Caution

This integrated circuit can be damaged by ESD. Texas Instruments recommends that all integrated circuits be handled with appropriate precautions. Failure to observe proper handling and installation procedures can cause damage.

ESD damage can range from subtle performance degradation to complete device failure. Precision integrated circuits may be more susceptible to damage because very small parametric changes could cause the device not to meet its published specifications.

12.5 Glossary

TI Glossary	This glossary lists and explains terms, acronyms, and definitions.

13 Mechanical, Packaging, and Orderable Information

The following pages include mechanical, packaging, and orderable information. This information is the most current data available for the designated devices. This data is subject to change without notice and revision of this document. For browser-based versions of this data sheet, refer to the left-hand navigation.

Copyright © 2022 Texas Instruments Incorporated

13.1 Package Option Addendum

Packaging Information

Orderable Device	Status(1)	Package Type	Package Drawing	Pins	Package Qty	Eco Plan(2)	Lead/Ball Finish(6)	MSL Peak Temp(3)	Op Temp (°C)	Device Marking(4) (5)
TL2575-05IKTTR	ACTIVE	DDPAK/TO-263	KTT	5	500	RoHS & Green	SN	Level-3-245C-168 HR	–40 to 125	TL2575-05I
TL2575-05IKTTR G3	ACTIVE	DDPAK/TO-263	KTT	5	500	RoHS & Green	SN	Level-3-245C-168 HR	–40 to 125	TL2575-05I
TL2575-05IKV	ACTIVE	TO-220	KV	5	50	RoHS & Green	SN	Level-NC-NC-NC	–40 to 125	TL2575-05I
TL2575-05IN	ACTIVE	PDIP	N	16	25	RoHS & Green	NIPDAU	Level-NC-NC-NC	–40 to 125	TL2575-05IN
TL2575-12IKTTR	ACTIVE	DDPAK/TO-263	KTT	5	500	RoHS & Green	SN	Level-3-245C-168 HR	–40 to 125	TL2575-12I
TL2575-12IKV	ACTIVE	TO-220	KV	5	50	RoHS & Green	SN	Level-NC-NC-NC	–40 to 125	TL2575-12I
TL2575-12IN	ACTIVE	PDIP	N	16	25	RoHS & Green	NIPDAU	Level-NC-NC-NC	–40 to 125	TL2575-12IN
TL2575-15IKTTR	ACTIVE	DDPAK/TO-263	KTT	5	500	RoHS & Green	SN	Level-3-245C-168 HR	–40 to 125	TL2575-15I
TL2575-15IKV	ACTIVE	TO-220	KV	5	50	RoHS & Green	SN	Level-NC-NC-NC	–40 to 125	TL2575-15I
TL2575-15IN	ACTIVE	PDIP	N	16	25	RoHS & Green	NIPDAU	Level-NC-NC-NC	–40 to 125	TL2575-15IN
TL2575-33IKTTR	ACTIVE	DDPAK/TO-263	KTT	5	500	RoHS & Green	SN	Level-3-245C-168 HR	–40 to 125	TL2575-33I
TL2575-33IKV	ACTIVE	TO-220	KV	5	500	RoHS & Green	SN	Level-NC-NC-NC	–40 to 125	TL2575-33I
TL2575-33IN	ACTIVE	PDIP	N	16	50	RoHS & Green	NIPDAU	Level-NC-NC-NC	–40 to 125	TL2575-33IN
TL2575-ADJIKTTR	ACTIVE	DDPAK/TO-263	KTT	5	25	RoHS & Green	SN	Level-3-245C-168 HR	–40 to 125	TL2575ADJI
TL2575-ADJIKTTRG3	ACTIVE	DDPAK/TO-263	KTT	5	25	RoHS & Green	SN	Level-3-245C-168 HR	–40 to 125	TL2575ADJI
TL2575-ADJIKV	ACTIVE	TO-220	KV	5	500	RoHS & Green	SN	Level-NC-NC-NC	–40 to 125	TL2575ADJI
TL2575-ADJIN	ACTIVE	PDIP	N	16	50	RoHS & Green	NIPDAU	Level-NC-NC-NC	–40 to 125	TL2575-ADJIN
TL2575-ADJINE4	ACTIVE	PDIP	N	16	25	RoHS & Green	NIPDAU	Level-NC-NC-NC	–40 to 125	TL2575-ADJIN
TL2575HV-05IKT TR	ACTIVE	DDPAK/TO-263	KTT	5	500	RoHS & Green	SN	Level-3-245C-168 HR	–40 to 125	2BHV-05I
TL2575HV-05IKV	ACTIVE	TO-220	KV	5	50	RoHS & Green	SN	Level-NC-NC-NC	–40 to 125	TL2575HV-05I
TL2575HV-05IN	ACTIVE	PDIP	N	16	25	RoHS & Green	NIPDAU	Level-NC-NC-NC	–40 to 125	TL2575HV-05IN
TL2575HV-12IKT TR	ACTIVE	DDPAK/TO-263	KTT	5	500	RoHS & Green	SN	Level-3-245C-168 HR	–40 to 125	2BHV-12I
TL2575HV-12IKV	ACTIVE	TO-220	KV	5	50	RoHS & Green	SN	Level-NC-NC-NC	–40 to 125	TL2575HV-12I
TL2575HV-12IN	ACTIVE	PDIP	N	16	25	RoHS & Green	NIPDAU	Level-NC-NC-NC	–40 to 125	TL2575HV-12IN
TL2575HV-15IKT TR	ACTIVE	DDPAK/TO-263	KTT	5	500	RoHS & Green	SN	Level-3-245C-168 HR	–40 to 125	2BHV-15I
TL2575HV-15IKV	ACTIVE	TO-220	KV	5	50	RoHS & Green	SN	Level-NC-NC-NC	–40 to 125	TL2575HV-15I

Copyright © 2022 Texas Instruments Incorporated

Orderable Device	Status(1)	Package Type	Package Drawing	Pins	Package Qty	Eco Plan(2)	Lead/Ball Finish(6)	MSL Peak Temp(3)	Op Temp (°C)	Device Marking(4) (5)
TL2575HV-15IN	ACTIVE	PDIP	N	16	25	RoHS & Green	NIPDAU	Level-NC-NC-NC	–40 to 125	TL2575HV-15IN
TL2575HV-33IKTTR	ACTIVE	DDPAK/TO-263	KTT	5	500	RoHS & Green	SN	Level-3-245C-168 HR	–40 to 125	2BHV-33I
TL2575HV-33IKV	ACTIVE	TO-220	KV	5	50	RoHS & Green	SN	Level-NC-NC-NC	–40 to 125	TL2575HV-33I
TL2575HV-33IN	ACTIVE	PDIP	N	16	25	RoHS & Green	NIPDAU	Level-NC-NC-NC	–40 to 125	TL2575HV-33IN
TL2575HV-ADJIKTTR	ACTIVE	DDPAK/TO-263	KTT	5	500	RoHS & Green	SN	Level-3-245C-168 HR	–40 to 125	2BHV-ADJI
TL2575HV-ADJIKV	ACTIVE	TO-220	KV	5	50	RoHS & Green	SN	Level-NC-NC-NC	–40 to 125	TL2575HVADJI
TL2575HV-ADJIN	ACTIVE	PDIP	N	16	25	RoHS & Green	NIPDAU	Level-NC-NC-NC	–40 to 125	TL2575HV-ADJIN
TL2575HV-ADJIKTTR	ACTIVE	DDPAK/TO-263	KTT	5	500	RoHS-Exempt & Green	SN	Level-3-245C-168 HR	–40 to 125	2BHV-ADJI
TL2575-ADJIKTTR	ACTIVE	DDPAK/TO-263	KTT	5	500	RoHS-Exempt & Green	SN	Level-3-245C-168 HR	–40 to 125	TL2575ADJI
TL2575HV-12IKTTR	ACTIVE	DDPAK/TO-263	KTT	5	500	RoHS-Exempt & Green	SN	Level-3-245C-168 HR	–40 to 125	2BHV-12I
TL2575-12IKTTR	ACTIVE	DDPAK/TO-263	KTT	5	500	RoHS-Exempt & Green	SN	Level-3-245C-168 HR	–40 to 125	TL2575-12I
TL2575HV-15IKTTR	ACTIVE	DDPAK/TO-263	KTT	5	500	RoHS-Exempt & Green	SN	Level-3-245C-168 HR	–40 to 125	2BHV-15I
TL2575-33IKTTR	ACTIVE	DDPAK/TO-263	KTT	5	500	RoHS-Exempt & Green	SN	Level-3-245C-168 HR	–40 to 125	TL2575-33I
TL2575HV-05IKTTR	ACTIVE	DDPAK/TO-263	KTT	5	500	RoHS-Exempt & Green	SN	Level-3-245C-168 HR	–40 to 125	2BHV-05I
TL2575-05IKTTR	ACTIVE	DDPAK/TO-263	KTT	5	500	RoHS-Exempt & Green	SN	Level-3-245C-168 HR	–40 to 125	TL2575-05I

(1) The marketing status values are defined as follows:
ACTIVE: Product device recommended for new designs.
LIFEBUY: TI has announced that the device will be discontinued, and a lifetime-buy period is in effect.
NRND: Not recommended for new designs. Device is in production to support existing customers, but TI does not recommend using this part in a new design.
PRE_PROD Unannounced device, not in production, not available for mass market, nor on the web, samples not available.
PREVIEW: Device has been announced but is not in production. Samples may or may not be available.
OBSOLETE: TI has discontinued the production of the device.

(2) Eco Plan - The planned eco-friendly classification: Pb-Free (RoHS), Pb-Free (RoHS Exempt), or Green (RoHS & no Sb/Br) - please check www.ti.com/productcontent for the latest availability information and additional product content details.
TBD: The Pb-Free/Green conversion plan has not been defined.
Pb-Free (RoHS): TI's terms "Lead-Free" or "Pb-Free" mean semiconductor products that are compatible with the current RoHS requirements for all 6 substances, including the requirement that lead not exceed 0.1% by weight in homogeneous materials. Where designed to be soldered at high temperatures, TI Pb-Free products are suitable for use in specified lead-free processes.
Pb-Free (RoHS Exempt): This component has a RoHS exemption for either 1) lead-based flip-chip solder bumps used between the die and package, or 2) lead-based die adhesive used between the die and leadframe. The component is otherwise considered Pb-Free (RoHS compatible) as defined above.
Green (RoHS & no Sb/Br): TI defines "Green" to mean Pb-Free (RoHS compatible), and free of Bromine (Br) and Antimony (Sb) based flame retardants (Br or Sb do not exceed 0.1% by weight in homogeneous material).

(3) MSL, Peak Temp. -- The Moisture Sensitivity Level rating according to the JEDEC industry standard classifications, and peak solder temperature.

Copyright © 2022 Texas Instruments Incorporated

(4) There may be additional marking, which relates to the logo, the lot trace code information, or the environmental category on the device.
(5) Multiple Device markings will be inside parentheses. Only one Device Marking contained in parentheses and separated by a "~" will appear on a device. If a line is indented then it is a continuation of the previous line and the two combined represent the entire Device Marking for that device.
(6) Lead/Ball Finish - Orderable Devices may have multiple material finish options. Finish options are separated by a vertical ruled line. Lead/Ball Finish values may wrap to two lines if the finish value exceeds the maximum column width.

Important Information and Disclaimer: The information provided on this page represents TI's knowledge and belief as of the date that it is provided. TI bases its knowledge and belief on information provided by third parties, and makes no representation or warranty as to the accuracy of such information. Efforts are underway to better integrate information from third parties. TI has taken and continues to take reasonable steps to provide representative and accurate information but may not have conducted destructive testing or chemical analysis on incoming materials and chemicals. TI and TI suppliers consider certain information to be proprietary, and thus CAS numbers and other limited information may not be available for release.

In no event shall TI's liability arising out of such information exceed the total purchase price of the TI part(s) at issue in this document sold by TI to Customer on an annual basis.

Copyright © 2022 Texas Instruments Incorporated

TAPE AND REEL INFORMATION

REEL DIMENSIONS

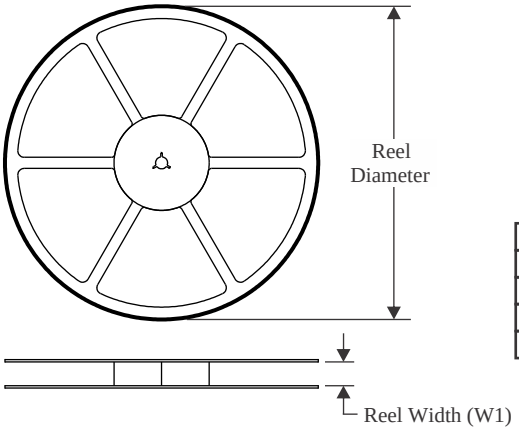

TAPE DIMENSIONS

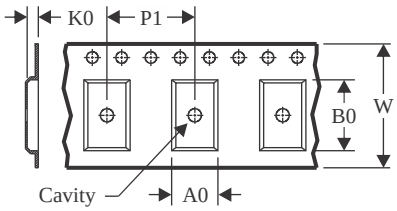

A0	Dimension designed to accommodate the component width
B0	Dimension designed to accommodate the component length
K0	Dimension designed to accommodate the component thickness
W	Overall width of the carrier tape
P1	Pitch between successive cavity centers

QUADRANT ASSIGNMENTS FOR PIN 1 ORIENTATION IN TAPE

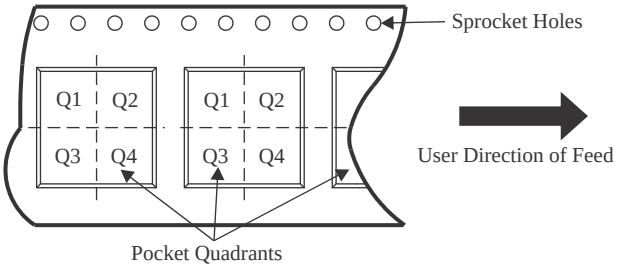

*All dimensions are nominal

Device	Package Type	Package Drawing	Pins	SPQ	Reel Diameter (mm)	Reel Width W1 (mm)	A0 (mm)	B0 (mm)	K0 (mm)	P1 (mm)	W (mm)	Pin1 Quadrant
TL2575-05IKTTR	DDPAK/ TO-263	KTT	5	500	330.0	24.4	10.75	14.85	5.0	16.0	24.0	Q2
TL2575-12IKTTR	DDPAK/ TO-263	KTT	5	500	330.0	24.4	10.75	14.85	5.0	16.0	24.0	Q2
TL2575-15IKTTR	DDPAK/ TO-263	KTT	5	500	330.0	24.4	10.8	16.3	5.11	16.0	24.0	Q2
TL2575-33IKTTR	DDPAK/ TO-263	KTT	5	500	330.0	24.4	10.75	14.85	5.0	16.0	24.0	Q2
TL2575-ADJIKTTR	DDPAK/ TO-263	KTT	5	500	330.0	24.4	10.75	14.85	5.0	16.0	24.0	Q2
TL2575HV-05IKTTR	DDPAK/ TO-263	KTT	5	500	330.0	24.4	10.75	14.85	5.0	16.0	24.0	Q2
TL2575HV-12IKTTR	DDPAK/ TO-263	KTT	5	500	330.0	24.4	10.75	14.85	5.0	16.0	24.0	Q2
TL2575HV-15IKTTR	DDPAK/ TO-263	KTT	5	500	330.0	24.4	10.75	14.85	5.0	16.0	24.0	Q2
TL2575HV-15IKTTR	DDPAK/ TO-263	KTT	5	500	330.0	24.4	10.8	16.3	5.11	16.0	24.0	Q2

Device	Package Type	Package Drawing	Pins	SPQ	Reel Diameter (mm)	Reel Width W1 (mm)	A0 (mm)	B0 (mm)	K0 (mm)	P1 (mm)	W (mm)	Pin1 Quadrant
TL2575HV-33IKTTR	DDPAK/ TO-263	KTT	5	500	330.0	24.4	10.8	16.3	5.11	16.0	24.0	Q2
TL2575HV-ADJIKTTR	DDPAK/ TO-263	KTT	5	500	330.0	24.4	10.75	14.85	5.0	16.0	24.0	Q2

TAPE AND REEL BOX DIMENSIONS

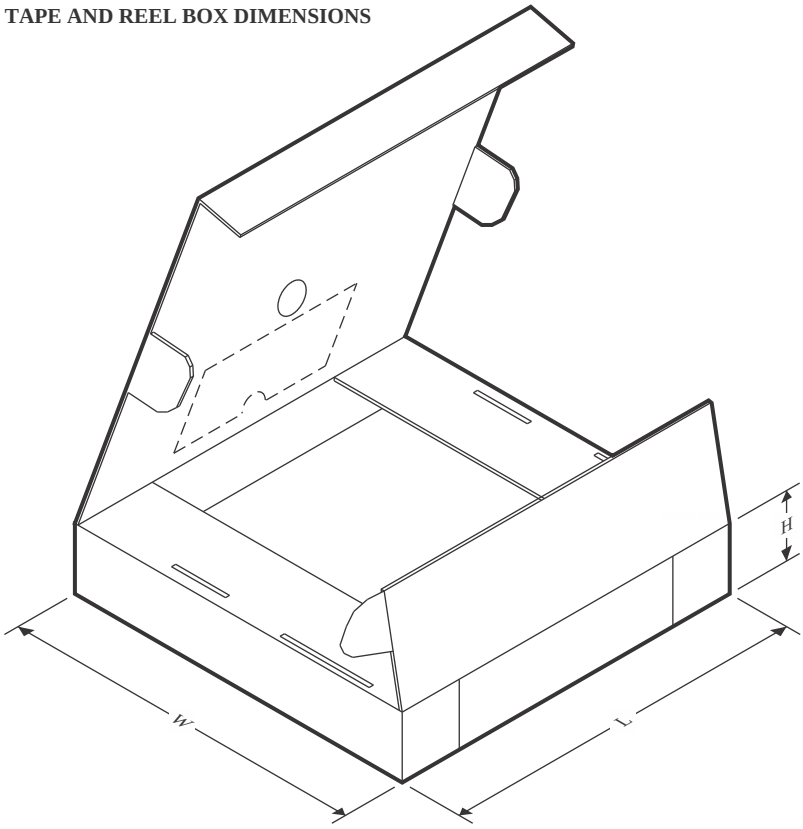

*All dimensions are nominal

Device	Package Type	Package Drawing	Pins	SPQ	Length (mm)	Width (mm)	Height (mm)
TL2575-05IKTTR	DDPAK/TO-263	KTT	5	500	356.0	356.0	45.0
TL2575-12IKTTR	DDPAK/TO-263	KTT	5	500	356.0	356.0	45.0
TL2575-15IKTTR	DDPAK/TO-263	KTT	5	500	340.0	340.0	38.0
TL2575-33IKTTR	DDPAK/TO-263	KTT	5	500	356.0	356.0	45.0
TL2575-ADJIKTTR	DDPAK/TO-263	KTT	5	500	356.0	356.0	45.0
TL2575HV-05IKTTR	DDPAK/TO-263	KTT	5	500	356.0	356.0	45.0
TL2575HV-12IKTTR	DDPAK/TO-263	KTT	5	500	356.0	356.0	45.0
TL2575HV-15IKTTR	DDPAK/TO-263	KTT	5	500	356.0	356.0	45.0
TL2575HV-15IKTTR	DDPAK/TO-263	KTT	5	500	340.0	340.0	38.0
TL2575HV-33IKTTR	DDPAK/TO-263	KTT	5	500	340.0	340.0	38.0
TL2575HV-ADJIKTTR	DDPAK/TO-263	KTT	5	500	356.0	356.0	45.0

TUBE

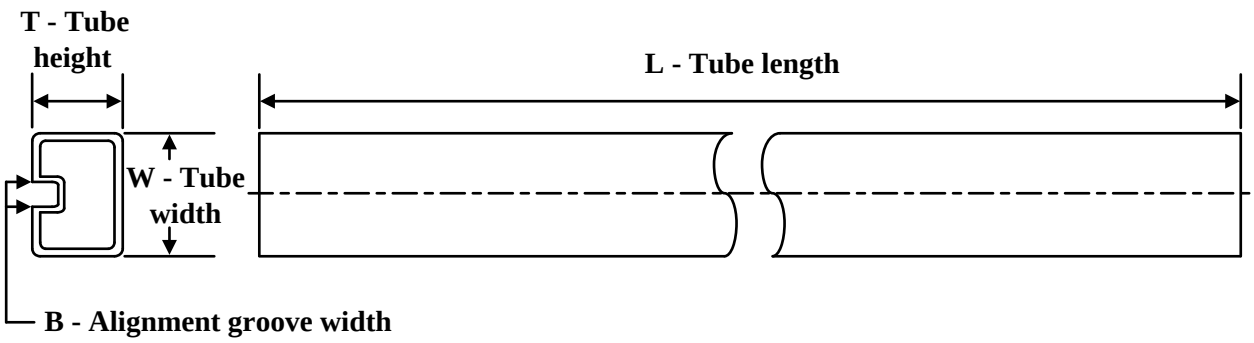

*All dimensions are nominal

Device	Package Name	Package Type	Pins	SPQ	L (mm)	W (mm)	T (µm)	B (mm)
TL2575-05IKV	KV	TO-220	5	50	534	32.7	700	15.6
TL2575-05IKV.A	KV	TO-220	5	50	534	32.7	700	15.6
TL2575-05IN	N	PDIP	16	25	506	13.97	11230	4.32
TL2575-05IN.A	N	PDIP	16	25	506	13.97	11230	4.32
TL2575-12IKV	KV	TO-220	5	50	534	32.7	700	15.6
TL2575-12IKV.A	KV	TO-220	5	50	534	32.7	700	15.6
TL2575-12IKV.B	KV	TO-220	5	50	534	32.7	700	15.6
TL2575-12IN	N	PDIP	16	25	506	13.97	11230	4.32
TL2575-12IN.A	N	PDIP	16	25	506	13.97	11230	4.32
TL2575-15IKV	KV	TO-220	5	50	534	32.7	700	15.6
TL2575-15IKV.A	KV	TO-220	5	50	534	32.7	700	15.6
TL2575-15IN	N	PDIP	16	25	506	13.97	11230	4.32
TL2575-15IN.A	N	PDIP	16	25	506	13.97	11230	4.32
TL2575-33IKV	KV	TO-220	5	50	534	32.7	700	15.6
TL2575-33IKV.A	KV	TO-220	5	50	534	32.7	700	15.6
TL2575-33IN	N	PDIP	16	25	506	13.97	11230	4.32
TL2575-33IN.A	N	PDIP	16	25	506	13.97	11230	4.32
TL2575-ADJIKV	KV	TO-220	5	50	534	32.7	700	15.6
TL2575-ADJIKV.A	KV	TO-220	5	50	534	32.7	700	15.6
TL2575-ADJIN	N	PDIP	16	25	506	13.97	11230	4.32
TL2575-ADJIN.A	N	PDIP	16	25	506	13.97	11230	4.32
TL2575HV-05IKV	KV	TO-220	5	50	534	32.7	700	15.6
TL2575HV-05IKV.A	KV	TO-220	5	50	534	32.7	700	15.6
TL2575HV-05IN	N	PDIP	16	25	506	13.97	11230	4.32
TL2575HV-05IN.A	N	PDIP	16	25	506	13.97	11230	4.32
TL2575HV-12IKV	KV	TO-220	5	50	534	32.7	700	15.6
TL2575HV-12IKV.A	KV	TO-220	5	50	534	32.7	700	15.6
TL2575HV-12IN	N	PDIP	16	25	506	13.97	11230	4.32
TL2575HV-12IN.A	N	PDIP	16	25	506	13.97	11230	4.32

Device	Package Name	Package Type	Pins	SPQ	L (mm)	W (mm)	T (µm)	B (mm)
TL2575HV-15IKV	KV	TO-220	5	50	534	32.7	700	15.6
TL2575HV-15IKV.A	KV	TO-220	5	50	534	32.7	700	15.6
TL2575HV-15IN	N	PDIP	16	25	506	13.97	11230	4.32
TL2575HV-15IN.A	N	PDIP	16	25	506	13.97	11230	4.32
TL2575HV-33IKV	KV	TO-220	5	50	534	32.7	700	15.6
TL2575HV-33IKV.A	KV	TO-220	5	50	534	32.7	700	15.6
TL2575HV-33IN	N	PDIP	16	25	506	13.97	11230	4.32
TL2575HV-33IN.A	N	PDIP	16	25	506	13.97	11230	4.32
TL2575HV-ADJIKV	KV	TO-220	5	50	534	32.7	700	15.6
TL2575HV-ADJIKV.A	KV	TO-220	5	50	534	32.7	700	15.6
TL2575HV-ADJIN	N	PDIP	16	25	506	13.97	11230	4.32
TL2575HV-ADJIN.A	N	PDIP	16	25	506	13.97	11230	4.32

KV (R–PZFM–T5) PLASTIC FLANGE–MOUNT PACKAGE

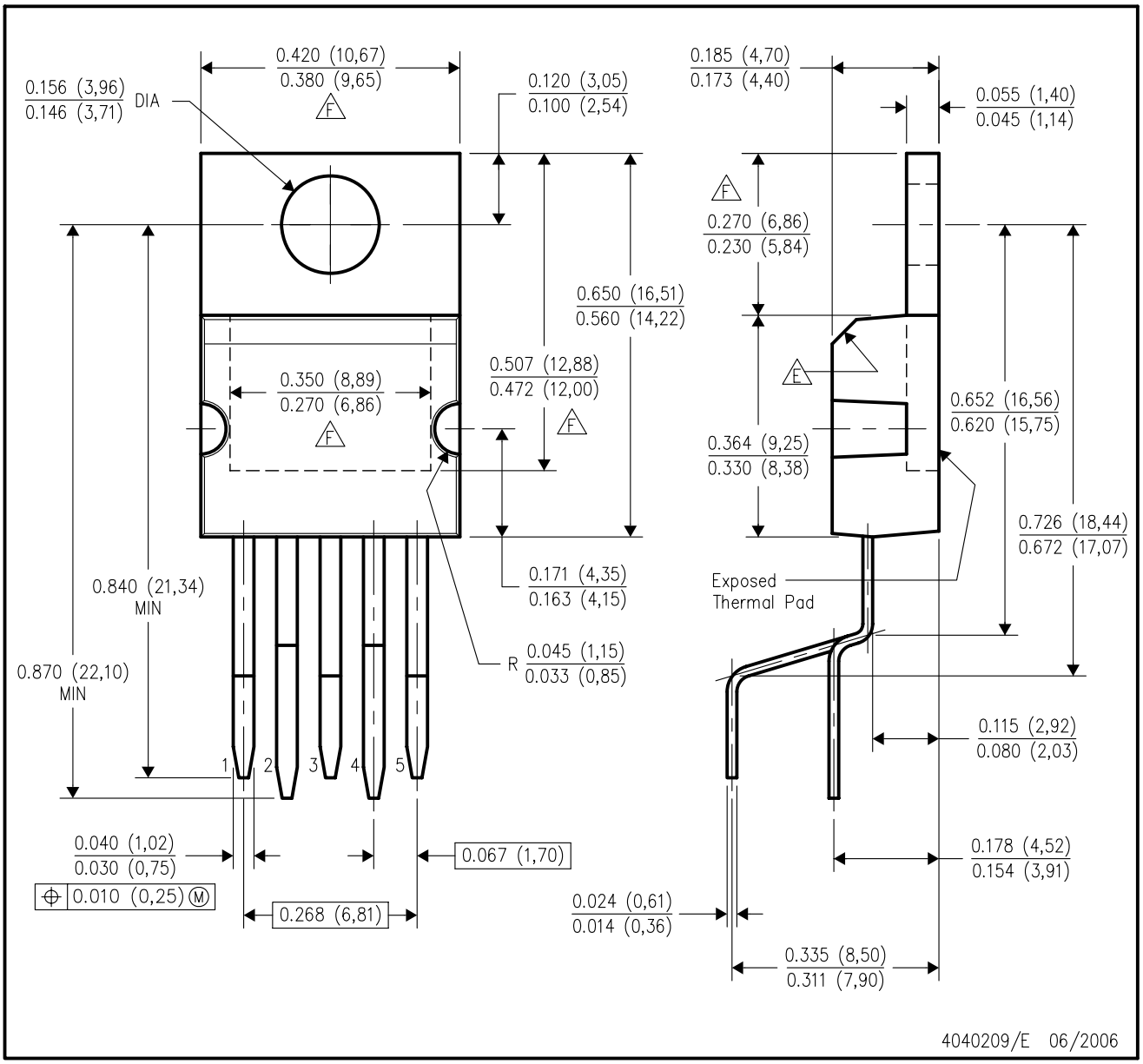

NOTES:
- A. All linear dimensions are in inches (millimeters).
- B. This drawing is subject to change without notice.
- C. All lead dimensions apply before solder dip.
- D. The center lead is in electrical contact with the mounting tab.
- E. The chamfer is optional.
- F. Thermal pad contour optional within these dimensions.

N (R–PDIP–T**) PLASTIC DUAL–IN–LINE PACKAGE

16 PINS SHOWN

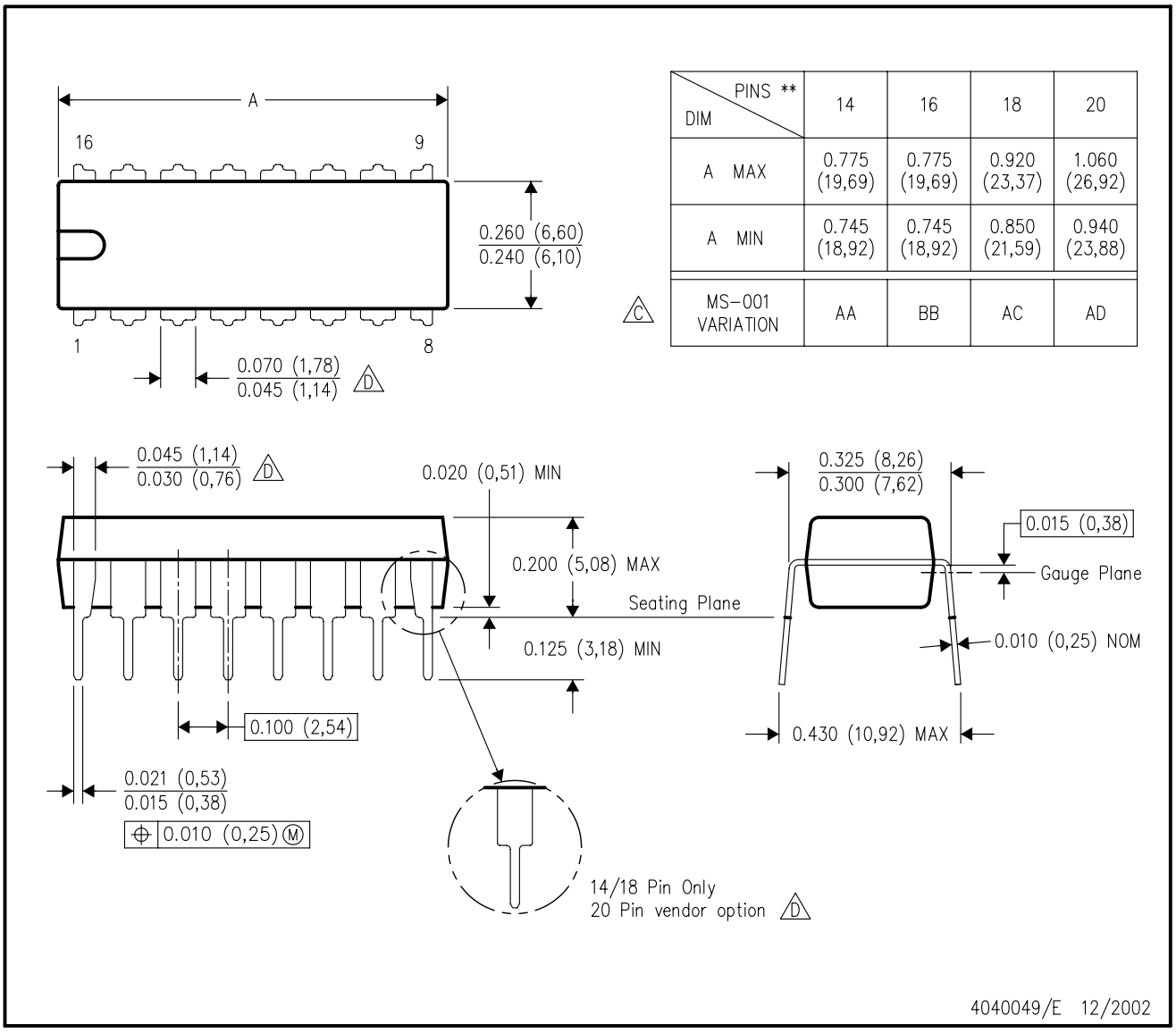

DIM \ PINS **	14	16	18	20
A MAX	0.775 (19,69)	0.775 (19,69)	0.920 (23,37)	1.060 (26,92)
A MIN	0.745 (18,92)	0.745 (18,92)	0.850 (21,59)	0.940 (23,88)
MS–001 VARIATION (C)	AA	BB	AC	AD

NOTES:
A. All linear dimensions are in inches (millimeters).
B. This drawing is subject to change without notice.
C. Falls within JEDEC MS–001, except 18 and 20 pin minimum body length (Dim A).
D. The 20 pin end lead shoulder width is a vendor option, either half or full width.

KTT (R–PSFM–G5) PLASTIC FLANGE–MOUNT PACKAGE

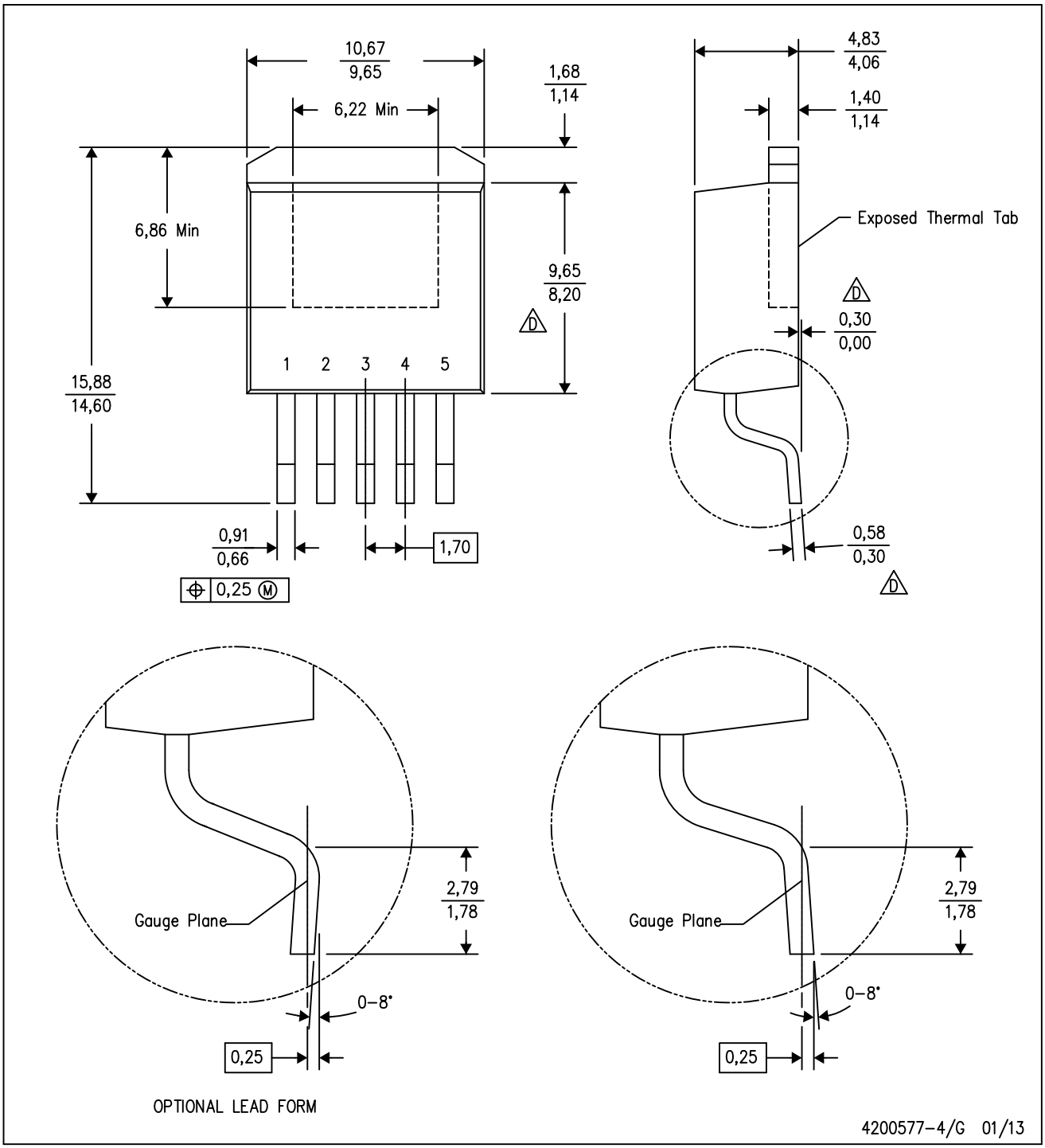

NOTES:
A. All linear dimensions are in millimeters.
B. This drawing is subject to change without notice.
C. Body dimensions do not include mold flash or protrusion. Mold flash or protrusion not to exceed 0.005 (0,13) per side.
D. Falls within JEDEC TO–263 variation BA, except minimum lead thickness, maximum seating height, and minimum body length.

KTT (R–PSFM–G5) PLASTIC FLANGE–MOUNT PACKAGE

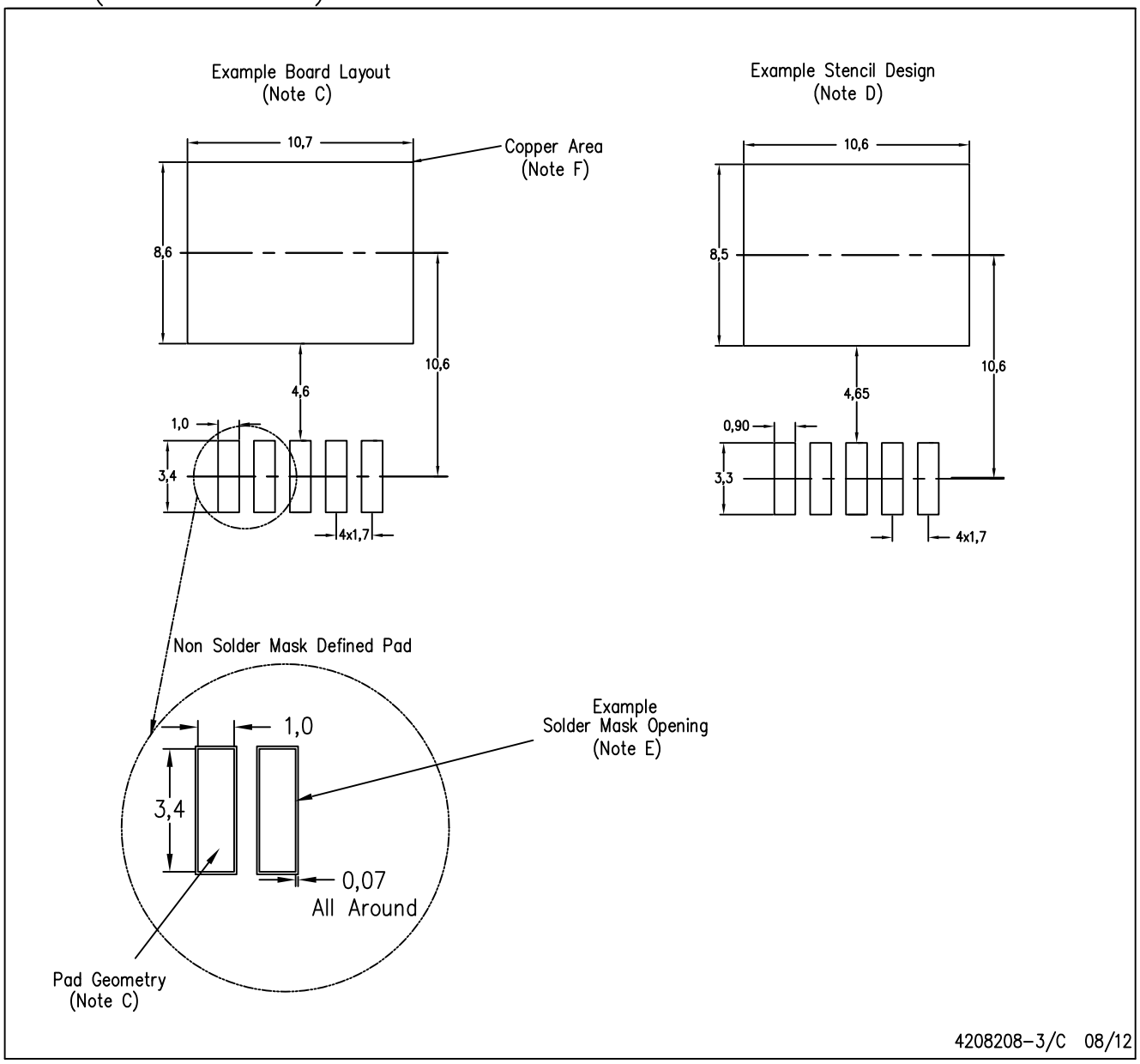

NOTES:
A. All linear dimensions are in millimeters.
B. This drawing is subject to change without notice.
C. Publication IPC–SM–782 is recommended for alternate designs.
D. Laser cutting apertures with trapezoidal walls and also rounding corners will offer better paste release. Customers should contact their board assembly site for stencil design recommendations. Refer to IPC–7525.
E. Customers should contact their board fabrication site for solder mask tolerances between and around signal pads.
F. This package is designed to be soldered to a thermal pad on the board. Refer to the Product Datasheet for specific thermal information, via requirements, and recommended thermal pad size. For thermal pad sizes larger than shown a solder mask defined pad is recommended in order to maintain the solderable pad geometry while increasing copper area.

KTT0005B

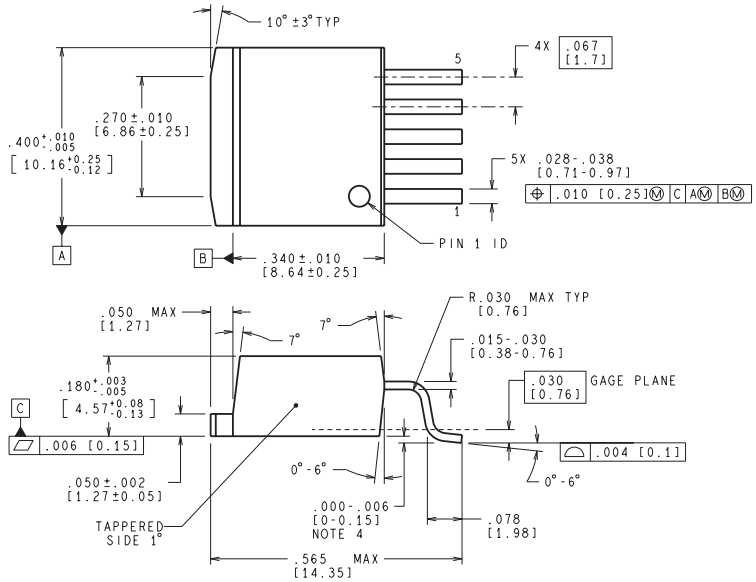

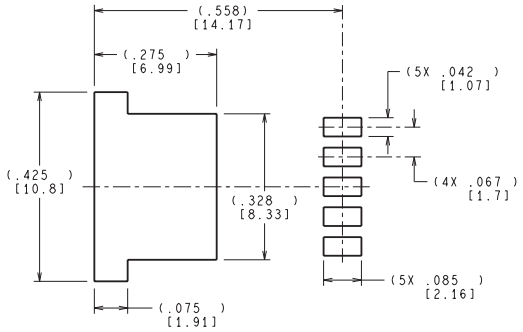

LAND PATTERN RECOMMENDATION

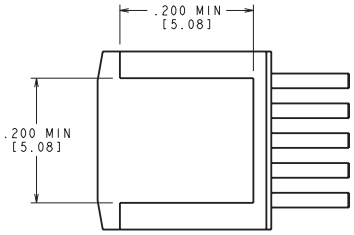

BOTTOM SIDE OF PACKAGE

CONTROLLING DIMENSION IS INCH
VALUES IN [ ] ARE MILLIMETERS
DIMENSIONS IN ( ) FOR REFERENCE ONLY

TS5B (Rev D)

IMPORTANT NOTICE AND DISCLAIMER

TI PROVIDES TECHNICAL AND RELIABILITY DATA (INCLUDING DATASHEETS), DESIGN RESOURCES (INCLUDING REFERENCE DESIGNS), APPLICATION OR OTHER DESIGN ADVICE, WEB TOOLS, SAFETY INFORMATION, AND OTHER RESOURCES “AS IS” AND WITH ALL FAULTS, AND DISCLAIMS ALL WARRANTIES, EXPRESS AND IMPLIED, INCLUDING WITHOUT LIMITATION ANY IMPLIED WARRANTIES OF MERCHANTABILITY, FITNESS FOR A PARTICULAR PURPOSE OR NON-INFRINGEMENT OF THIRD PARTY INTELLECTUAL PROPERTY RIGHTS.

These resources are intended for skilled developers designing with TI products. You are solely responsible for (1) selecting the appropriate TI products for your application, (2) designing, validating and testing your application, and (3) ensuring your application meets applicable standards, and any other safety, security, regulatory or other requirements.

These resources are subject to change without notice. TI grants you permission to use these resources only for development of an application that uses the TI products described in the resource. Other reproduction and display of these resources is prohibited. No license is granted to any other TI intellectual property right or to any third party intellectual property right. TI disclaims responsibility for, and you fully indemnify TI and its representatives against any claims, damages, costs, losses, and liabilities arising out of your use of these resources.

TI’s products are provided subject to TI’s Terms of Sale, TI’s General Quality Guidelines, or other applicable terms available either on ti.com or provided in conjunction with such TI products. TI’s provision of these resources does not expand or otherwise alter TI’s applicable warranties or warranty disclaimers for TI products. Unless TI explicitly designates a product as custom or customer-specified, TI products are standard, catalog, general purpose devices.

TI objects to and rejects any additional or different terms you may propose.

Copyright © 2025, Texas Instruments Incorporated

Last updated 10/2025