TEXAS INSTRUMENTS

TL2842, TL2843, TL2844, TL2845
TL3842, TL3843, TL3844, TL3845

SLVS038I – JANUARY 1989 – REVISED JULY 2016

TLx84x Current-Mode PWM Controllers

1 Features

- Optimized for Off-Line and DC-to-DC Converters
- Low Start-Up Current (< 1 mA)
- Automatic Feed-forward compensation
- Pulse-by-Pulse Current Limiting
- Enhanced Load-Response Characteristics
- Undervoltage Lockout With Hysteresis
- Double-Pulse Suppression
- High-Current Totem-Pole Output
- Internally Trimmed Bandgap Reference
- 500-kHz Operation
- Error Amplifier With Low Output Resistance
- Designed to be Interchangeable with UC2842 and UC3842 Series

2 Applications

- Switching regulators of any polarity
- Transformer-coupled DC/DC convertors

Device Pinout Drawing SOIC (14)

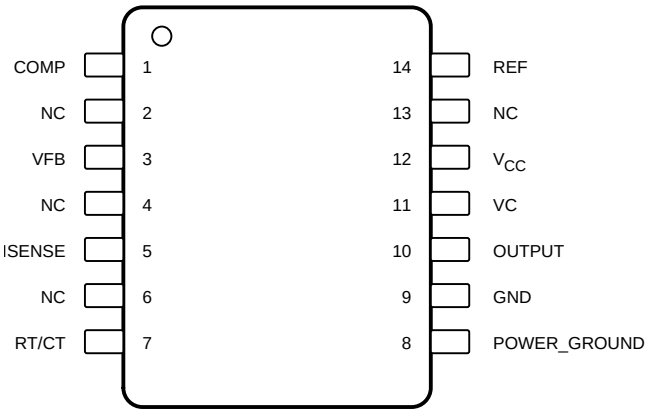

Not to scale

3 Description

The TL284x and TL384x series of control integrated circuits provide the features that are necessary to implement off-line or DC-to-DC fixed-frequency current-mode control schemes, with a minimum number of external components. Some of the internally implemented circuits are an undervoltage lockout (UVLO), featuring a start-up current of less than 1 mA, and a precision reference trimmed for accuracy at the error amplifier input. Other internal circuits include logic to ensure latched operation, a pulse-width modulation (PWM) comparator (that also provides current-limit control), and a totem-pole output stage designed to source or sink high-peak current. The output stage, suitable for driving N-channel MOSFETs, is low when it is in the off state.

Device Information(1)

PART NUMBER	PACKAGE	BODY SIZE (NOM)
TLx84x	SOIC (8)	4.90 mm × 3.91 mm
	SOIC (14)	8.65 mm × 3.91 mm
	PDIP (8)	9.81 mm × 6.35 mm

(1) For all available packages, see the orderable addendum at the end of the datasheet.

Device Pinout Drawing SOIC or PDIP (8)

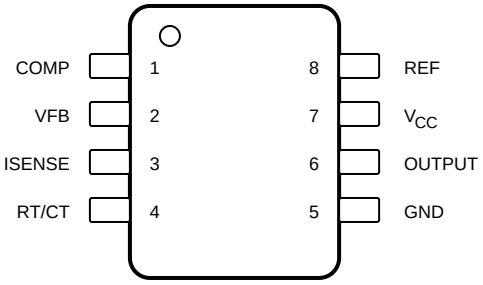

Not to scale

NC — No internal connection

An IMPORTANT NOTICE at the end of this data sheet addresses availability, warranty, changes, use in safety-critical applications, intellectual property matters and other important disclaimers. PRODUCTION DATA.

Table of Contents

1 Features ... 1
2 Applications ... 1
3 Description ... 1
4 Revision History ... 2
5 Pin Configuration and Functions ... 3
6 Specifications ... 4
6.1 Absolute Maximum Ratings ... 4
6.2 ESD Ratings ... 4
6.3 Recommended Operating Conditions ... 4
6.4 Thermal Information ... 4
6.5 Electrical Characteristics ... 5
6.6 Typical Characteristics ... 6
7 Detailed Description ... 8
7.1 Overview ... 8
7.2 Functional Block Diagram ... 8
7.3 Feature Description ... 8
7.4 Device Functional Modes ... 9
8 Application and Implementation ... 10
8.1 Typical Application ... 10
9 Power Supply Recommendations ... 12
10 Layout ... 13
10.1 Layout Guidelines ... 13
10.2 Layout Example ... 14
11 Device and Documentation Support ... 15
11.1 Receiving Notification of Documentation Updates 15
11.2 Related Links ... 15
11.3 Community Resources ... 15
11.4 Trademarks ... 15
11.5 Electrostatic Discharge Caution ... 15
11.6 Glossary ... 15
12 Mechanical, Packaging, and Orderable Information ... 15

4 Revision History

NOTE: Page numbers for previous revisions may differ from page numbers in the current version.

Changes from Revision H (January 2015) to Revision I	Page
• Updated pinout images	3
• Changed TL984x to TL384x in *Recommended Operating Conditions*	4
• Changed TLx842, TLx844 to TLx842, TLx843 and TLx843, TLx845 to TLx844, TLx845 in *Pulse-Width-Modulator Section*	6
• Added *Receiving Notification of Documentation Updates* section and *Community Resources* section	15

Changes from Revision G (February 2008) to Revision H	Page
• Added *Applications*, *Device Information* table, *Pin Functions* table, *ESD Ratings* table, *Thermal Information* table, *Typical Characteristics*, *Feature Description* section, *Device Functional Modes*, *Application and Implementation* section, *Power Supply Recommendations* section, *Layout* section, *Device and Documentation Support* section, and *Mechanical, Packaging, and Orderable Information* section.	1
• Deleted *Ordering Information* table.	1

Copyright © 1989–2016, Texas Instruments Incorporated

5 Pin Configuration and Functions

D Package
14-Pin SOIC
Top View

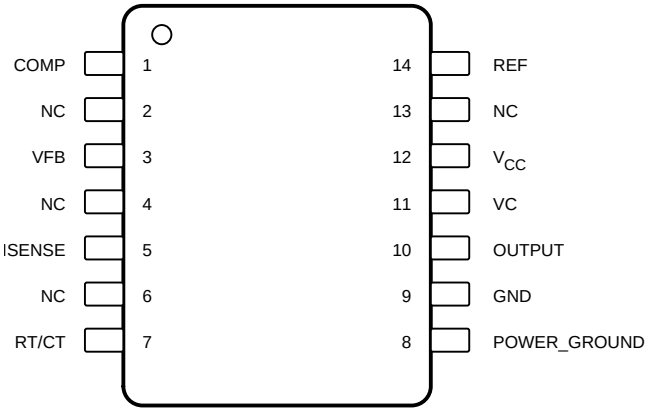

Not to scale

D or P Package
8-Pin SOIC or PDIP
Top View

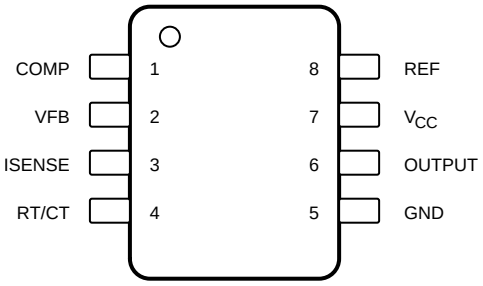

Not to scale

NC — No internal connection

Pin Functions

PIN			TYPE	DESCRIPTION
NAME	D	D or P		
COMP	1	1	I/O	Error amplifier compensation pin
GND	9	5	—	Device power supply ground terminal
ISENSE	5	3	I	Current sense comparator input
NC	2, 4, 6, 13	—	—	Do not connect
OUTPUT	10	6	O	PWM Output
POWER GROUND	8	—	—	Output PWM ground terminal
REF	14	8	O	Oscillator voltage reference
RT/CT	7	4	I/O	Oscillator RC input
VC	11	—	—	Output PWM positive voltage supply
V_{CC}	12	7	—	Device positive voltage supply
VFB	3	2	I	Error amplifier input

Copyright © 1989–2016, Texas Instruments Incorporated

6 Specifications

6.1 Absolute Maximum Ratings

over operating free-air temperature range (unless otherwise noted)[1]

		MIN	MAX	UNIT
V_{CC}	Supply Voltage[2]	Self limiting		—
V_I	Analog input voltage range, VFB and ISENSE	–0.3	6.3	V
V_O	Output Voltage		35	V
V_I	Input Voltage, VC and D Package only		35	V
I_{CC}	Supply current		30	mA
I_O	Output current		±1	A
	error amplifier output sink current		10	mA
T_J	Virtual junction temperature		150	°C
	Output energy (capacitive load)		5	µJ
T_{stg}	Storage temperature	–65	150	°C

(1) Stresses beyond those listed under *Absolute Maximum Ratings* may cause permanent damage to the device. These are stress ratings only, which do not imply functional operation of the device at these or any other conditions beyond those indicated under *Recommended Operating Conditions*. Exposure to absolute-maximum-rated conditions for extended periods may affect device reliability.
(2) All voltages are with respect to the device GND pin.

6.2 ESD Ratings

			VALUE	UNIT
$V_{(ESD)}$	Electrostatic discharge	Human body model (HBM), per ANSI/ESDA/JEDEC JS-001, all pins[1]	3000	V
		Charged device model (CDM), per JEDEC specification JESD22-C101, all pins[2]	3000	

(1) JEDEC document JEP155 states that 500-V HBM allows safe manufacturing with a standard ESD control process.
(2) JEDEC document JEP157 states that 250-V CDM allows safe manufacturing with a standard ESD control process.

6.3 Recommended Operating Conditions

over operating free-air temperature range (unless otherwise noted)

			MIN	TYP	MAX	UNIT
V_{CC} and VC[1]	Supply Voltage				30	V
V_I, RT/CT	Input Voltage		0		5.5	V
V_I, VFB and ISENSE	Input Voltage		0		5.5	V
V_O, OUTPUT	Output voltage		0		30	V
V_O, POWER GROUND[1]	Output voltage		–0.1		1	V
I_{CC}	Supply current, externally limited				25	mA
I_O	Average output current				200	mA
$I_{O(ref)}$	Reference output current				–20	mA
f_{OSC}	Oscillator frequency			100	500	kHz
T_A	Operating free-air temperature	TL284x	–40		85	°C
		TL384x	0		70	

(1) These recommended voltages for VC and POWER GROUND apply only to the D package.

6.4 Thermal Information

THERMAL METRIC[1]		TLx84x			UNIT
		D (SOIC)	D (SOIC)	P (PDIP)	
		8 PINS	14 PINS	8 PINS	
$R_{\theta JA}$	Junction-to-ambient thermal resistance	97	86	85	°C/W

(1) For more information about traditional and new thermal metrics, see the *Semiconductor and IC Package Thermal Metrics* application report.

Copyright © 1989–2016, Texas Instruments Incorporated

6.5 Electrical Characteristics

over operating free-air temperature range, V_{CC} = 15 V[1], R_T = 10 kΩ, C_T = 3.3 nF (unless otherwise noted)

PARAMETER		TEST CONDITIONS[2]	TL284x			TL384x			UNIT
			MIN	TYP[2]	MAX	MIN	TYP[2]	MAX	
Reference Section									
Output voltage		I_O = 1 mA, T_A = 25°C	4.95	5	5.05	4.9	5	5.1	V
Line regulation		V_{CC} = 12 V to 25 V		6	20		6	20	mV
Load regulation		I_O = 1 mA to 20 mA		6	25		6	25	mV
Temperature coefficient of output voltage				0.2	0.4		0.2	0.4	mV/°C
Output voltage with worst-case variation		V_{CC} = 12 V to 25 V, I_O = 1 mA to 20 mA	4.9		5.1	4.82		5.18	V
Output noise voltage		f = 10 Hz to 10 kHz, T_A = 25°C		50			50		µV
Output-voltage long-term drift		After 1000 h at T_A = 25°C		5	25		5	25	mV
Short-circuit output current			–30	–100	–180	–30	–100	–180	mA
Oscillator Section									
Oscillator frequency[3]		T_A = 25°C	47	52	57	47	52	57	kHz
Frequency change with supply voltage		V_{CC} = 12 V to 25 V		2	10		2	10	Hz/kHz
Frequency change with temperature				50			50		Hz/kHz
peak-to-peak amplitude at RT/CT				1.7			1.7		V
Error-Amplifier Section									
Feedback input voltage		COMP at 2.5 V	2.45	2.50	2.55	2.42	2.50	2.58	V
Input bias current				–0.3	–1		–0.3	–2	µA
Open-loop voltage amplification		V_O = 2 V to 4 V	65	90		65	90		dB
Gain-bandwidth product			0.7	1		0.7	1		MHz
Supply-voltage rejection ratio		V_{CC} = 12 V to 25 V	60	70		60	70		dB
Output sink current		VFB, at 2.7 V, COMP at 1.1 V	2	6		2	6		mA
Output source current		VFB, at 2.3 V, COMP at 5 V	–0.5	–0.8		–0.5	–0.8		mA
Hihg-level output voltage		VFB, at 2.3 V, R_L = 15 kΩ to GND	5	6		5	6		V
Low-level output voltage		VFB, at 2.7 V, R_L = 15 kΩ to GND		0.7	1.1		0.7	1.1	V
Current-sense Section									
Voltage amplification		See[4][5]	2.85	3	3.13	2.85	3	3.15	V/V
Current-sense comparator threshold		COMP at 5 V, see[4]	0.9	1	1.1	0.9	1	1.1	V
Supply-voltage rejection ratio		V_{CC} = 12 V to 25 V, see[4]		70			70		dB
Input bias current				–2	–10		–2	–10	µA
Delay time to output				150	300		150	300	ns
Output Section									
High-level output voltage		I_{OH} = –20 mA	13	13.5		13	13.5		V
		I_{OH} = –200 mA	12	13.5		13	13.5		
Low-level output voltage		I_{OH} = 20 mA		0.1	0.4		0.1	0.4	V
		I_{OH} = 200 mA		1.5	2.2		1.5	2.2	
Rise time		C_L = 1 nF, T_A = 25°C		50	150		50	150	ns
fall time		C_L = 1 nF, T_A = 25°C		50	150		50	150	ns
Undervoltage-Lockout Section									
Start threshold voltage	TLx842, TLx844		15	16	17	14.5	16	17.5	V
	TLx843, TLx845		7.8	8.4	9	7.8	8.4	9	

(1) Adjust V_{CC} above the start threshold before setting it to 15 V.
(2) All typical values are at TA = 25°C.
(3) Output frequency equals oscillator frequency for the TLx842 and TLx843. Output frequency is one-half the oscillator frequency for the TLx844 and TLx845.
(4) These parameters are measured at the trip point of the latch, with VFB at 0 V.
(5) Voltage amplification is measured between ISENSE and COMP, with the input changing from 0 V to 0.8 V.

Copyright © 1989–2016, Texas Instruments Incorporated

Electrical Characteristics (continued)

over operating free-air temperature range, V_{CC} = 15 V[(1)], R_T = 10 kΩ, C_T = 3.3 nF (unless otherwise noted)

PARAMETER		TEST CONDITIONS[(2)]	TL284x			TL384x			UNIT
			MIN	TYP[(2)]	MAX	MIN	TYP[(2)]	MAX	
Minimum operating voltage after startup	TLx842, TLx844		9	10	11	8.5	10	11.5	V
	TLx843, TLx845		7	7.6	8.2	7	7.6	8.02	
Pulse-Width-Modulator Section									
Maximum duty cycle	TLx842, TLx843		95%	97%	100%	95%	97%	100%	
	TLx844, TLx845		46%	48%	50%	46%	48%	50%	
Minimum duty cycle					0%			0%	
Supply Voltage									
Start-up current				0.5	1		0.5	1	mA
Operating supply current		VFB and ISENSE at 0 V		11	17		11	17	mA
Limiting voltage		I_{CC} = 25 mA		34			34		V

6.6 Typical Characteristics

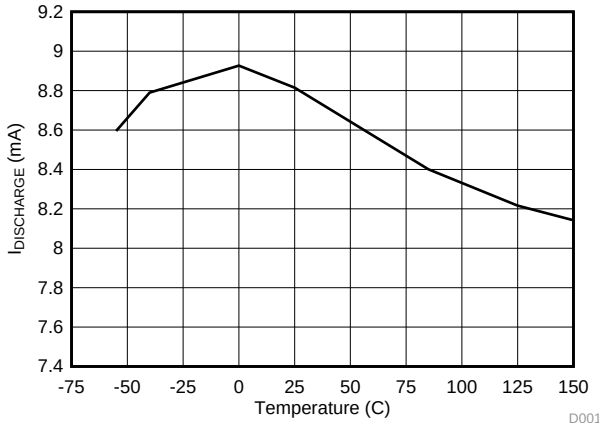

Figure 1. Oscillator Discharge Current vs Temperature for V_{IN} = 15 V and V_{OSC} = 2V

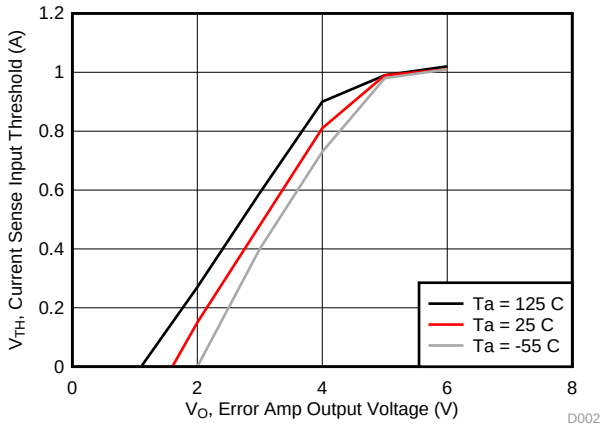

Figure 2. Current Sense Input Threshold vs Error Amplifier Output Voltage for V_{IN} = 15 V

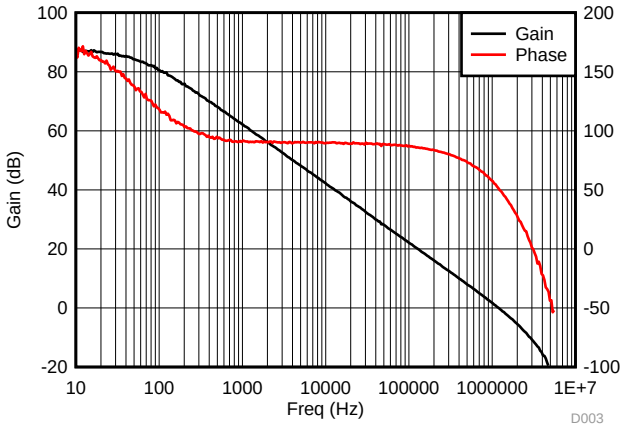

Figure 3. Error Amplifier Open-Loop Gain and Phase vs Frequency V_{CC} = 15 V, R_L = 100 kΩ, and T_A = 25 °C

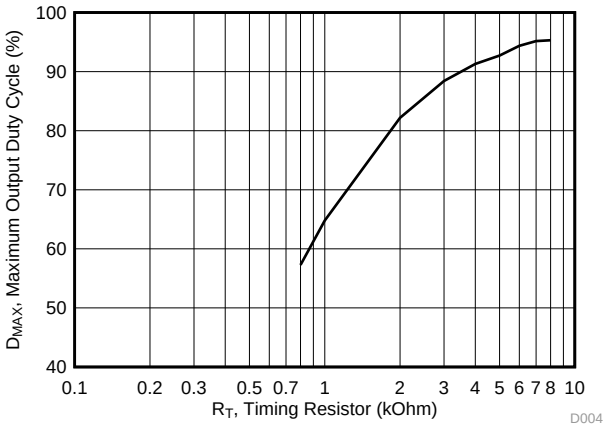

Figure 4. Max Output Duty Cycle vs Timing Resistor for V_{CC} = 15, C_T = 3.3 nF, T_A = 25 °C

Copyright © 1989–2016, Texas Instruments Incorporated

Typical Characteristics (continued)

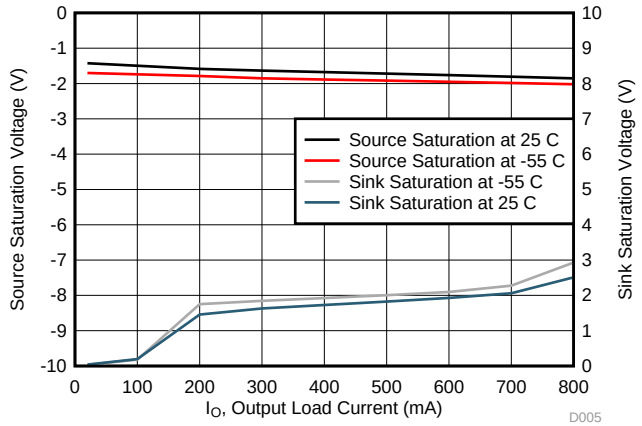

Figure 5. Output Saturation Voltage vs Load Current for V_{CC} = 15 V with 5-ms Input Pulses

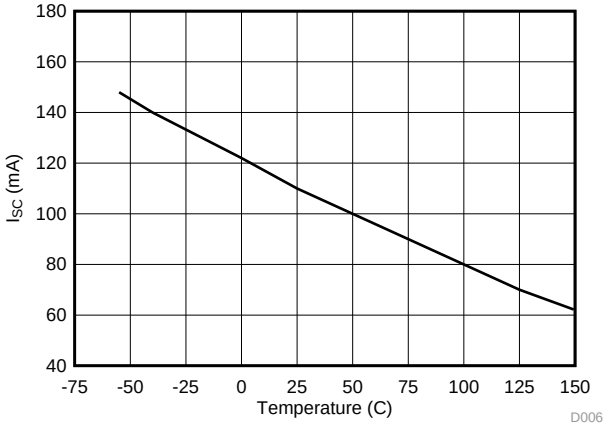

Figure 6. Reference Short Circuit Current vs Temperature for V_{IN} = 15 V

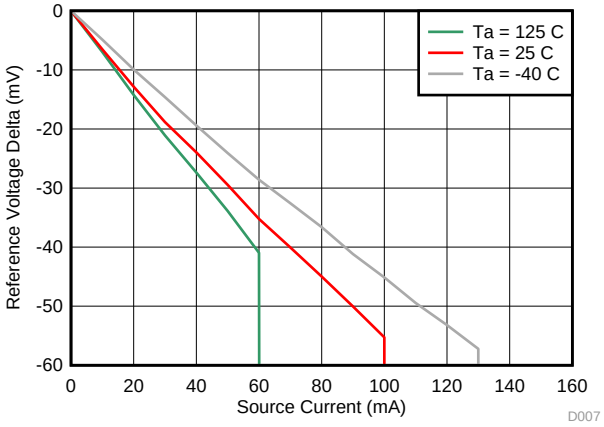

Figure 7. Reference Voltage vs Source Current

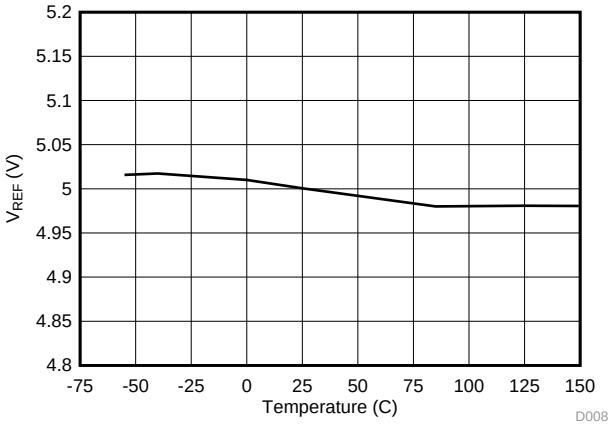

Figure 8. Reference Voltage vs Temperature

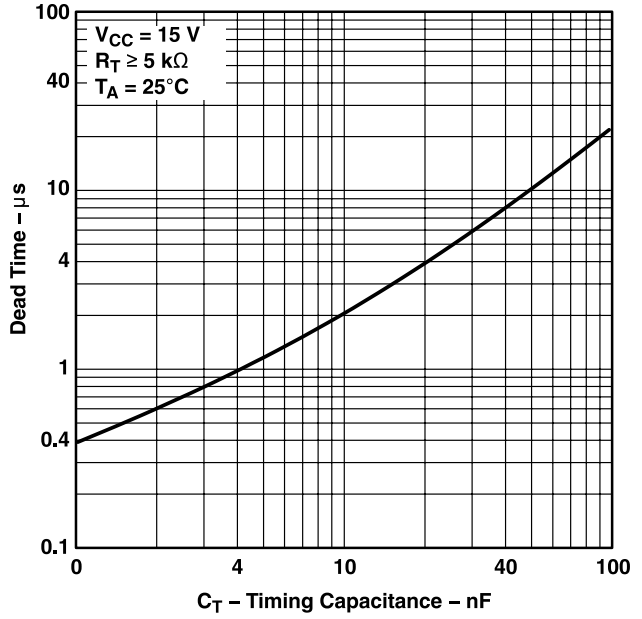

Figure 9. Dead Time vs Timing Capacitance

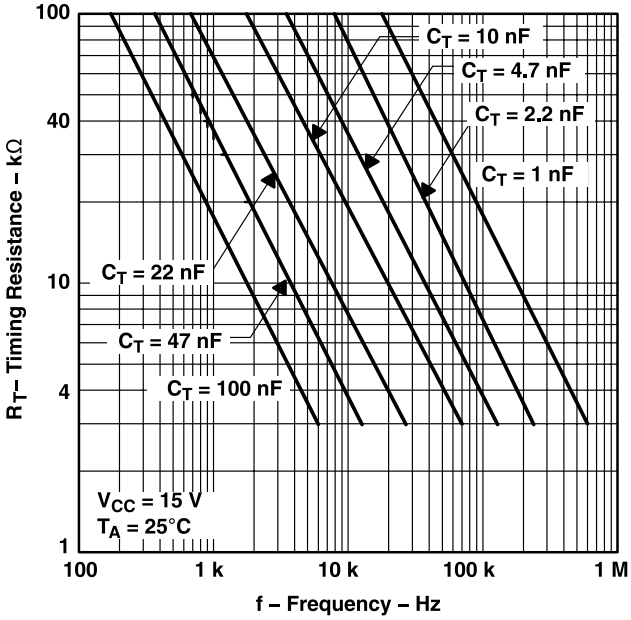

Figure 10. Timing Resistance vs Frequency

7 Detailed Description

7.1 Overview

The TL284x and TL384x series of control integrated circuits provide the features that are necessary to implement off-line or DC-to-DC fixed-frequency current-mode control schemes, with a minimum number of external components. Some of the internally implemented circuits are an undervoltage lockout (UVLO), featuring a start-up current of less than 1 mA, and a precision reference trimmed for accuracy at the error amplifier input. Other internal circuits include logic to ensure latched operation, a pulse-width modulation (PWM) comparator (that also provides current-limit control), and a totem-pole output stage designed to source or sink high-peak current. The output stage, suitable for driving N-channel MOSFETs, is low when it is in the off state.

Major differences between members of these series are the UVLO thresholds and maximum duty-cycle ranges. Typical UVLO thresholds of 16 V (on) and 10 V (off) on the TLx842 and TLx844 devices make them ideally suited to off-line applications. The corresponding typical thresholds for the TLx843 and TLx845 devices are 8.4 V (on) and 7.6 V (off). The TLx842 and TLx843 devices can operate to duty cycles approaching 100%. A duty-cycle range of 0 to 50% is obtained by the TLx844 and TLx845 by the addition of an internal toggle flip-flop, which blanks the output off every other clock cycle.

The TL284x-series devices are characterized for operation from −40°C to +85°C. The TL384x devices are characterized for operation from 0°C to 70°C.

7.2 Functional Block Diagram

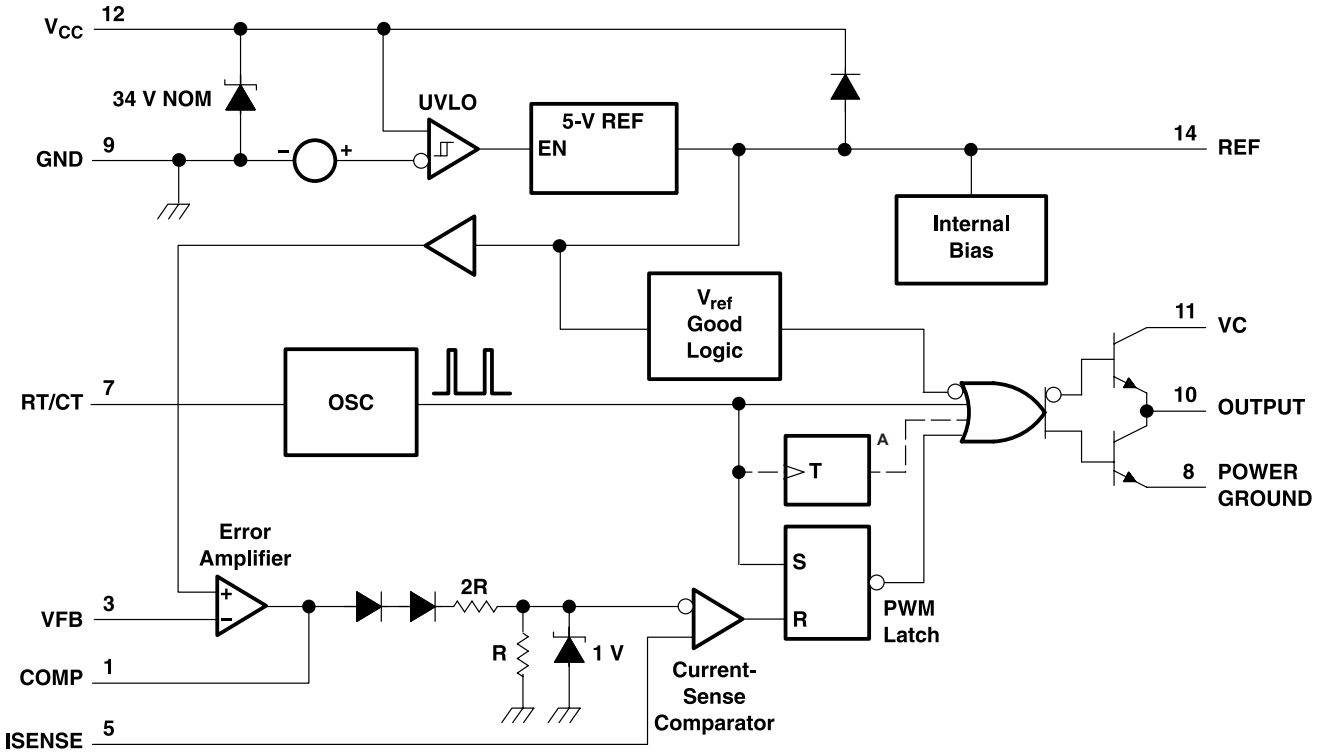

A. The toggle flip-flop is present only in TL2844, TL2845, TL3844, and TL3845. Pin numbers shown are for the D (14-pin) package.

7.3 Feature Description

7.3.1 Pulse-by-Pulse Current Limiting

Pulse-by-pulse limiting is inherent in the control scheme. An upper limit on the peak current can be established by simply clamping the error voltage. Accurate current limiting allows optimization of magnetic and power semiconductor elements while ensuring reliable supply operation

Copyright © 1989–2016, Texas Instruments Incorporated

Feature Description (continued)

7.3.2 Error Amplifier With Low Output Resistance

With a low output resistance, various impedance networks may be used on the compensation pin input for error amplifier feedback.

7.3.3 High-Current Totem-Pole Output

The output of the TLx84x devices can sink or source up to 1 A of current.

7.4 Device Functional Modes

7.4.1 Shutdown Technique

The PWM controller (see Figure 11) can be shut down by two methods: either raise the voltage at ISENSE above 1 V or pull the COMP terminal below a voltage two diode drops above ground. Either method causes the output of the PWM comparator to be high (see *Functional Block Diagram*). The PWM latch is reset dominant so that the output remains low until the next clock cycle after the shutdown condition at the COMP or ISENSE terminal is removed. In one example, an externally latched shutdown can be accomplished by adding an SCR that resets by cycling VCC below the lower UVLO threshold. At this point, the reference turns off, allowing the SCR to reset.

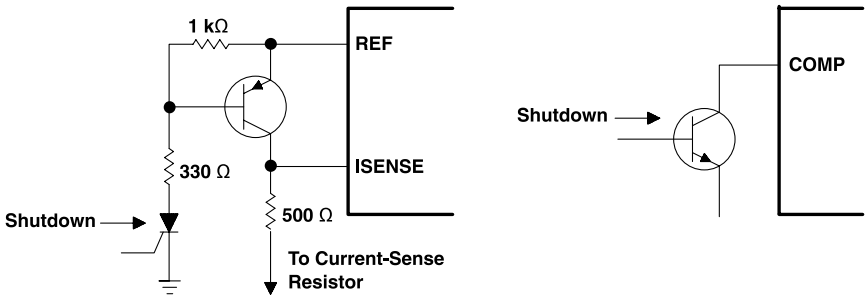

Figure 11. Shutdown Techniques

7.4.2 Slope Compensation

A fraction of the oscillator ramp can be summed resistively with the current-sense signal to provide slope compensation for converters requiring duty cycles over 50% (see Figure 12).

NOTE

Capacitor C forms a filter with R2 to suppress the leading-edge switch spikes.

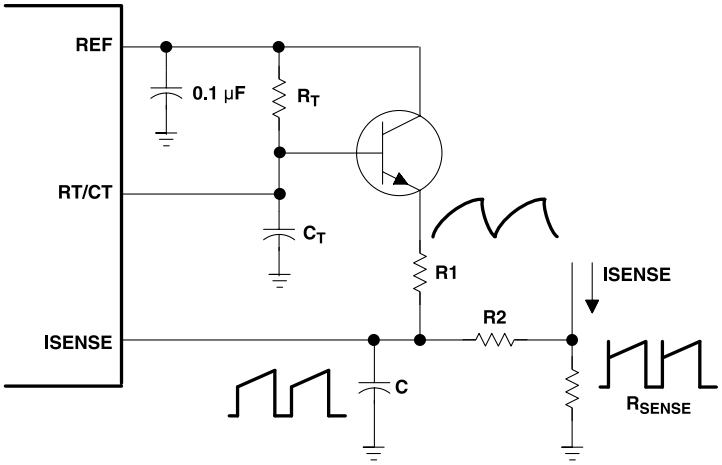

Figure 12. Slope Compensation

8 Application and Implementation

NOTE

Information in the following applications sections is not part of the TI component specification, and TI does not warrant its accuracy or completeness. TI's customers are responsible for determining suitability of components for their purposes. Customers should validate and test their design implementation to confirm system functionality.

8.1 Typical Application

The following application is an open-loop laboratory test fixture. This circuit demonstrates the setup and use of the TL284x and TL384x devices and their internal circuitry.

In the open-loop laboratory test fixture (see Figure 13), high peak currents associated with loads necessitate careful grounding techniques. Timing and bypass capacitors should be connected close to the GND terminal in a single-point ground. The transistor and 5-kΩ potentiometer sample the oscillator waveform and apply an adjustable ramp to the ISENSE terminal.

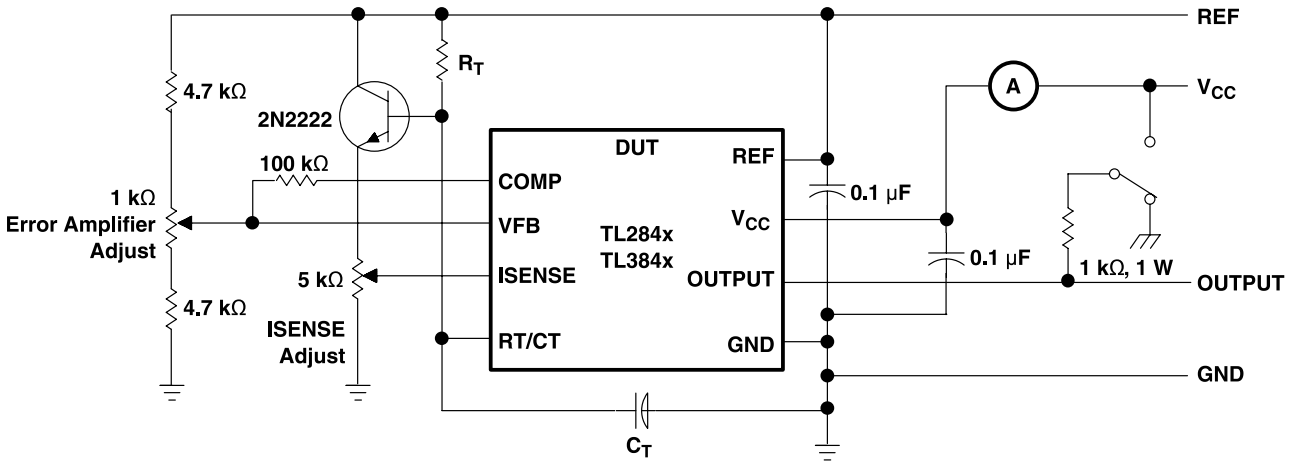

Figure 13. Open-Loop Laboratory Test Fixture

8.1.1 Design Requirements

The design techniques in the following sections may be used for power supply PWM applications which fall within the following requirements.

- 500-kHz or lower operation
- 30-V or less output voltage
- 200-mA or less output current

Copyright © 1989–2016, Texas Instruments Incorporated

Typical Application (continued)

8.1.2 Detailed Design Procedure

8.1.2.1 Current-Sense Circuit

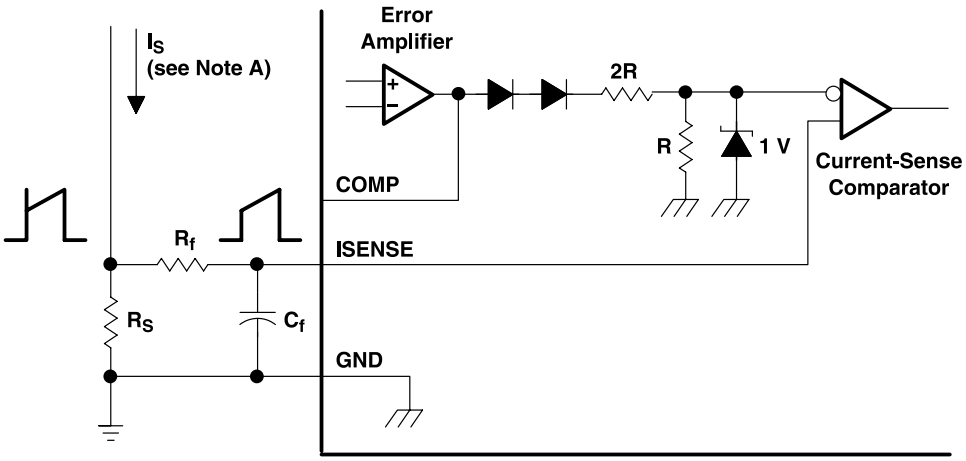

A. Peak current (IS) is determined by the formula: $I_{S(max)} = \frac{1\ V}{R_S}$ A small RC filter formed by resistor Rf and capacitor Cf may be required to suppress switch transients.

Figure 14. Current-Sense Circuit Schematic

8.1.2.2 Error-Amplifier Configuration

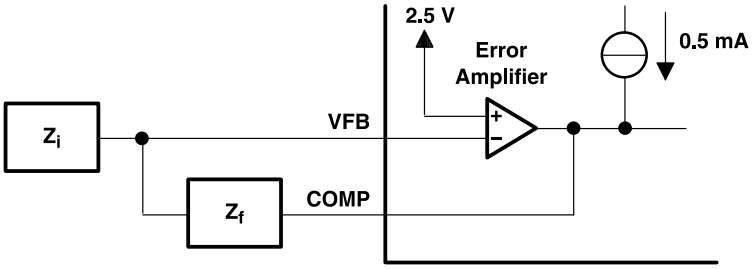

A. Error amplifier can source or sink up to 0.5 mA.

Figure 15. Error-Amplifier Configuration Schematic

8.1.2.3 Oscillator Section

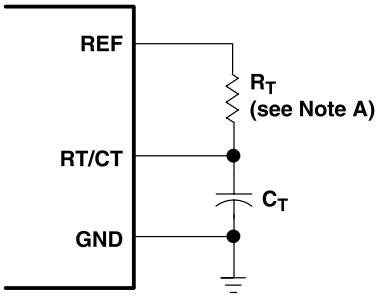

A. For $R_T > 5\ k\Omega$: $f \approx \frac{1.72}{R_T C_T}$

Figure 16. Oscillator Section Schematic

Typical Application (continued)

8.1.3 Application Curve

The application curve shows oscillator characteristics for chosen capacitor and resistor values.

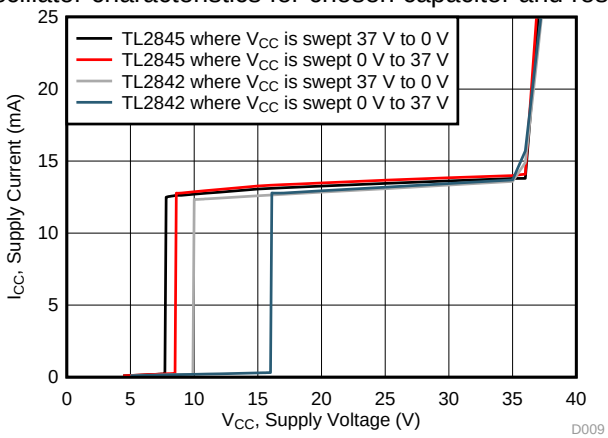

Figure 17. Supply Current vs Supply Voltage

9 Power Supply Recommendations

See *Recommended Operating Conditions* for the recommended power supply voltages for the TL284x and TL384x devices. TI also recommends to have a decoupling capacitor on the output of the device's power supply to limit noise on the device input.

Copyright © 1989–2016, Texas Instruments Incorporated

10 Layout

10.1 Layout Guidelines

Always try to use a low EMI inductor with a ferrite type closed core. Some examples would be toroid and encased E core inductors. Open core can be used if they have low EMI characteristics and are located a bit more away from the low power traces and components. Make the poles perpendicular to the PCB as well if using an open core. Stick cores usually emit the most unwanted noise.

10.1.1 Feedback Traces

Try to run the feedback trace as far from the inductor and noisy power traces as possible. Also, keep the feedback trace to be as direct as possible and somewhat thick. These two sometimes involve a trade-off, but keeping it away from inductor EMI and other noise sources is the more critical of the two. Run the feedback trace on the side of the PCB opposite of the inductor with a ground plane separating the two.

10.1.2 Input/Output Capacitors

When using a low value ceramic input filter capacitor, it should be located as close to the V_{CC} pin of the IC as possible. This will eliminate as much trace inductance effects as possible and give the internal IC rail a cleaner voltage supply. Some designs require the use of a feed-forward capacitor connected from the output to the feedback pin as well, usually for stability reasons. In this case it should also be positioned as close to the IC as possible. Using surface mount capacitors also reduces lead length and lessens the chance of noise coupling into the effective antenna created by through-hole components.

10.1.3 Compensation Components

External compensation components for stability should also be placed close to the IC. Surface mount components are recommended here as well for the same reasons discussed for the filter capacitors. These should not be located very close to the inductor either.

10.1.4 Traces and Ground Planes

Make all of the power (high current) traces as short, direct, and thick as possible. It is good practice on a standard PCB board to make the traces an absolute minimum of 15 mils (0.381 mm) per Ampere. The inductor, output capacitors, and output diode should be as close to each other possible. This helps reduce the EMI radiated by the power traces due to the high switching currents through them. This will also reduce lead inductance and resistance as well, which in turn reduces noise spikes, ringing, and resistive losses that produce voltage errors.

The grounds of the IC, input capacitors, output capacitors, and output diode (if applicable) should be connected close together directly to a ground plane. It would also be a good idea to have a ground plane on both sides of the PCB. This will reduce noise as well by reducing ground loop errors as well as by absorbing more of the EMI radiated by the inductor. For multi-layer boards with more than two layers, a ground plane can be used to separate the power plane (where the power traces and components are) and the signal plane (where the feedback and compensation and components are) for improved performance. On multi-layer boards the use of vias will be required to connect traces and different planes. It is good practice to use one standard via per 200 mA of current if the trace will need to conduct a significant amount of current from one plane to the other.

Arrange the components so that the switching current loops curl in the same direction. Due to the way switching regulators operate, there are two power states. One state when the switch is on and one when the switch is off. During each state there will be a current loop made by the power components that are currently conducting. Place the power components so that during each of the two states the current loop is conducting in the same direction. This prevents magnetic field reversal caused by the traces between the two half-cycles and reduces radiated EMI.

Copyright © 1989–2016, Texas Instruments Incorporated

10.2 Layout Example

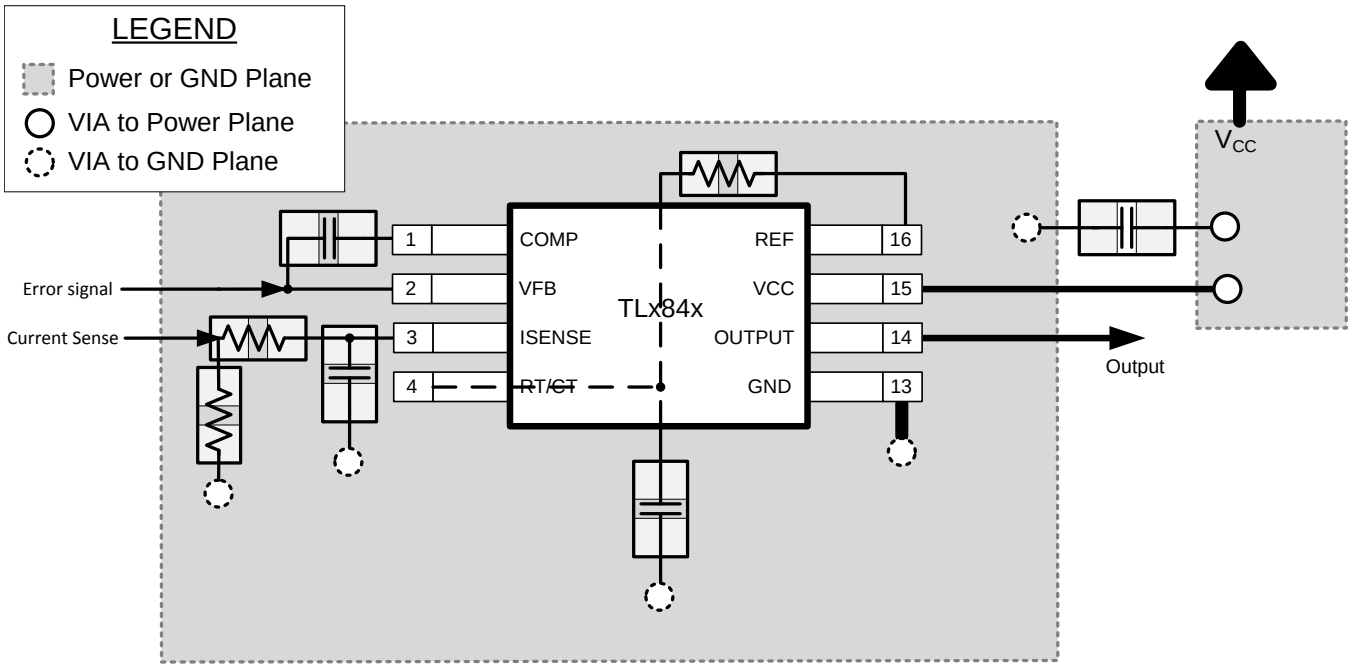

Figure 18. Layout of D-8 or P Package for TLx84x Devices

Copyright © 1989–2016, Texas Instruments Incorporated

11 Device and Documentation Support

11.1 Receiving Notification of Documentation Updates

To receive notification of documentation updates, navigate to the device product folder on ti.com. In the upper right corner, click on Alert me to register and receive a weekly digest of any product information that has changed. For change details, review the revision history included in any revised document.

11.2 Related Links

The table below lists quick access links. Categories include technical documents, support and community resources, tools and software, and quick access to sample or buy.

Table 1. Related Links

PARTS	PRODUCT FOLDER	SAMPLE & BUY	TECHNICAL DOCUMENTS	TOOLS & SOFTWARE	SUPPORT & COMMUNITY
TL2842	Click here	Click here	Click here	Click here	Click here
TL2843	Click here	Click here	Click here	Click here	Click here
TL2844	Click here	Click here	Click here	Click here	Click here
TL2845	Click here	Click here	Click here	Click here	Click here
TL3842	Click here	Click here	Click here	Click here	Click here
TL3843	Click here	Click here	Click here	Click here	Click here
TL3844	Click here	Click here	Click here	Click here	Click here
TL3845	Click here	Click here	Click here	Click here	Click here

11.3 Community Resources

The following links connect to TI community resources. Linked contents are provided "AS IS" by the respective contributors. They do not constitute TI specifications and do not necessarily reflect TI's views; see TI's Terms of Use.

TI E2E™ Online Community ***TI's Engineer-to-Engineer (E2E) Community.*** Created to foster collaboration among engineers. At e2e.ti.com, you can ask questions, share knowledge, explore ideas and help solve problems with fellow engineers.

Design Support ***TI's Design Support*** Quickly find helpful E2E forums along with design support tools and contact information for technical support.

11.4 Trademarks

E2E is a trademark of Texas Instruments.
All other trademarks are the property of their respective owners.

11.5 Electrostatic Discharge Caution

These devices have limited built-in ESD protection. The leads should be shorted together or the device placed in conductive foam during storage or handling to prevent electrostatic damage to the MOS gates.

11.6 Glossary

SLYZ022 — *TI Glossary*.

This glossary lists and explains terms, acronyms, and definitions.

12 Mechanical, Packaging, and Orderable Information

The following pages include mechanical, packaging, and orderable information. This information is the most current data available for the designated devices. This data is subject to change without notice and revision of this document. For browser-based versions of this data sheet, refer to the left-hand navigation.

PACKAGING INFORMATION

Orderable Device	Status (1)	Package Type	Package Drawing	Pins	Package Qty	Eco Plan (2)	Lead finish/ Ball material (6)	MSL Peak Temp (3)	Op Temp (°C)	Device Marking (4/5)	Samples
TL2842D	OBSOLETE	SOIC	D	14		TBD	Call TI	Call TI	-40 to 85	TL2842	
TL2842D-8	OBSOLETE	SOIC	D	8		TBD	Call TI	Call TI	-40 to 85	TL2842	
TL2842DR	ACTIVE	SOIC	D	14	2500	RoHS & Green	NIPDAU	Level-2-260C-1 YEAR	-40 to 85	TL2842	Samples
TL2842DR-8	ACTIVE	SOIC	D	8	2500	RoHS & Green	NIPDAU	Level-2-260C-1 YEAR	-40 to 85	TL2842	Samples
TL2842P	ACTIVE	PDIP	P	8	50	RoHS & Green	NIPDAU	N / A for Pkg Type	-40 to 85	TL2842P	Samples
TL2843D-8	OBSOLETE	SOIC	D	8		TBD	Call TI	Call TI	-40 to 85	TL2843	
TL2843DR	ACTIVE	SOIC	D	14	2500	RoHS & Green	NIPDAU	Level-1-260C-UNLIM	-40 to 85	TL2843	Samples
TL2843DR-8	ACTIVE	SOIC	D	8	2500	RoHS & Green	NIPDAU	Level-1-260C-UNLIM	-40 to 85	TL2843	Samples
TL2843DRE4	ACTIVE	SOIC	D	14	2500	RoHS & Green	NIPDAU	Level-1-260C-UNLIM	-40 to 85	TL2843	Samples
TL2843DRG4-8	ACTIVE	SOIC	D	8	2500	RoHS & Green	NIPDAU	Level-1-260C-UNLIM	-40 to 85	TL2843	Samples
TL2843P	ACTIVE	PDIP	P	8	50	RoHS & Green	NIPDAU	N / A for Pkg Type	-40 to 85	TL2843P	Samples
TL2844D	OBSOLETE	SOIC	D	14		TBD	Call TI	Call TI	-40 to 85	TL2844	
TL2844D-8	OBSOLETE	SOIC	D	8		TBD	Call TI	Call TI	-40 to 85	TL2844	
TL2844DR	ACTIVE	SOIC	D	14	2500	RoHS & Green	NIPDAU	Level-1-260C-UNLIM	-40 to 85	TL2844	Samples
TL2844DR-8	ACTIVE	SOIC	D	8	2500	RoHS & Green	NIPDAU	Level-1-260C-UNLIM	-40 to 85	TL2844	Samples
TL2844DRG4	ACTIVE	SOIC	D	14	2500	RoHS & Green	NIPDAU	Level-1-260C-UNLIM	-40 to 85	TL2844	Samples
TL2844P	ACTIVE	PDIP	P	8	50	RoHS & Green	NIPDAU	N / A for Pkg Type	-40 to 85	TL2844P	Samples
TL2844PE4	ACTIVE	PDIP	P	8	50	RoHS & Green	NIPDAU	N / A for Pkg Type	-40 to 85	TL2844P	Samples
TL2845D	OBSOLETE	SOIC	D	14		TBD	Call TI	Call TI	-40 to 85	TL2845	
TL2845D-8	OBSOLETE	SOIC	D	8		TBD	Call TI	Call TI	-40 to 85	TL2845	
TL2845DR	ACTIVE	SOIC	D	14	2500	RoHS & Green	NIPDAU	Level-1-260C-UNLIM	-40 to 85	TL2845	Samples
TL2845DR-8	ACTIVE	SOIC	D	8	2500	RoHS & Green	NIPDAU	Level-1-260C-UNLIM	-40 to 85	TL2845	Samples

Orderable Device	Status (1)	Package Type	Package Drawing	Pins	Package Qty	Eco Plan (2)	Lead finish/ Ball material (6)	MSL Peak Temp (3)	Op Temp (°C)	Device Marking (4/5)	Samples
TL2845DRG4	ACTIVE	SOIC	D	14	2500	RoHS & Green	NIPDAU	Level-1-260C-UNLIM	-40 to 85	TL2845	Samples
TL2845P	ACTIVE	PDIP	P	8	50	RoHS & Green	NIPDAU	N / A for Pkg Type	-40 to 85	TL2845P	Samples
TL3842D-8	OBSOLETE	SOIC	D	8		TBD	Call TI	Call TI	0 to 70	TL3842	
TL3842DR	ACTIVE	SOIC	D	14	2500	RoHS & Green	NIPDAU	Level-2-260C-1 YEAR	0 to 70	TL3842	Samples
TL3842DR-8	ACTIVE	SOIC	D	8	2500	RoHS & Green	NIPDAU	Level-2-260C-1 YEAR	0 to 70	TL3842	Samples
TL3842DRE4-8	ACTIVE	SOIC	D	8	2500	RoHS & Green	NIPDAU	Level-2-260C-1 YEAR	0 to 70	TL3842	Samples
TL3842P	ACTIVE	PDIP	P	8	50	RoHS & Green	NIPDAU	N / A for Pkg Type	0 to 70	TL3842P	Samples
TL3842PE4	ACTIVE	PDIP	P	8	50	RoHS & Green	NIPDAU	N / A for Pkg Type	0 to 70	TL3842P	Samples
TL3843D	OBSOLETE	SOIC	D	14		TBD	Call TI	Call TI	0 to 70	TL3843	
TL3843D-8	OBSOLETE	SOIC	D	8		TBD	Call TI	Call TI	0 to 70	TL3843	
TL3843DR	ACTIVE	SOIC	D	14	2500	RoHS & Green	NIPDAU	Level-1-260C-UNLIM	0 to 70	TL3843	Samples
TL3843DR-8	ACTIVE	SOIC	D	8	2500	RoHS & Green	NIPDAU	Level-1-260C-UNLIM	0 to 70	TL3843	Samples
TL3843P	ACTIVE	PDIP	P	8	50	RoHS & Green	NIPDAU	N / A for Pkg Type	0 to 70	TL3843P	Samples
TL3844D	OBSOLETE	SOIC	D	14		TBD	Call TI	Call TI	0 to 70	TL3844	
TL3844D-8	OBSOLETE	SOIC	D	8		TBD	Call TI	Call TI	0 to 70	TL3844	
TL3844DR	ACTIVE	SOIC	D	14	2500	RoHS & Green	NIPDAU	Level-1-260C-UNLIM	0 to 70	TL3844	Samples
TL3844DR-8	ACTIVE	SOIC	D	8	2500	RoHS & Green	NIPDAU	Level-1-260C-UNLIM	0 to 70	TL3844	Samples
TL3844P	ACTIVE	PDIP	P	8	50	RoHS & Green	NIPDAU	N / A for Pkg Type	0 to 70	TL3844P	Samples
TL3844PE4	ACTIVE	PDIP	P	8	50	RoHS & Green	NIPDAU	N / A for Pkg Type	0 to 70	TL3844P	Samples
TL3845D	ACTIVE	SOIC	D	14	50	RoHS & Green	NIPDAU	Level-1-260C-UNLIM	0 to 70	TL3845	Samples
TL3845D-8	OBSOLETE	SOIC	D	8		TBD	Call TI	Call TI	0 to 70	TL3845	
TL3845DR	ACTIVE	SOIC	D	14	2500	RoHS & Green	NIPDAU	Level-1-260C-UNLIM	0 to 70	TL3845	Samples
TL3845DR-8	ACTIVE	SOIC	D	8	2500	RoHS & Green	NIPDAU	Level-1-260C-UNLIM	0 to 70	TL3845	Samples

Orderable Device	Status (1)	Package Type	Package Drawing	Pins	Package Qty	Eco Plan (2)	Lead finish/ Ball material (6)	MSL Peak Temp (3)	Op Temp (°C)	Device Marking (4/5)	Samples
TL3845P	ACTIVE	PDIP	P	8	50	RoHS & Green	NIPDAU	N / A for Pkg Type	0 to 70	TL3845P	Samples
TL3845PE4	ACTIVE	PDIP	P	8	50	RoHS & Green	NIPDAU	N / A for Pkg Type	0 to 70	TL3845P	Samples

(1) The marketing status values are defined as follows:
ACTIVE: Product device recommended for new designs.
LIFEBUY: TI has announced that the device will be discontinued, and a lifetime-buy period is in effect.
NRND: Not recommended for new designs. Device is in production to support existing customers, but TI does not recommend using this part in a new design.
PREVIEW: Device has been announced but is not in production. Samples may or may not be available.
OBSOLETE: TI has discontinued the production of the device.

(2) **RoHS:** TI defines "RoHS" to mean semiconductor products that are compliant with the current EU RoHS requirements for all 10 RoHS substances, including the requirement that RoHS substance do not exceed 0.1% by weight in homogeneous materials. Where designed to be soldered at high temperatures, "RoHS" products are suitable for use in specified lead-free processes. TI may reference these types of products as "Pb-Free".
RoHS Exempt: TI defines "RoHS Exempt" to mean products that contain lead but are compliant with EU RoHS pursuant to a specific EU RoHS exemption.
Green: TI defines "Green" to mean the content of Chlorine (Cl) and Bromine (Br) based flame retardants meet JS709B low halogen requirements of <=1000ppm threshold. Antimony trioxide based flame retardants must also meet the <=1000ppm threshold requirement.

(3) MSL, Peak Temp. - The Moisture Sensitivity Level rating according to the JEDEC industry standard classifications, and peak solder temperature.

(4) There may be additional marking, which relates to the logo, the lot trace code information, or the environmental category on the device.

(5) Multiple Device Markings will be inside parentheses. Only one Device Marking contained in parentheses and separated by a "~" will appear on a device. If a line is indented then it is a continuation of the previous line and the two combined represent the entire Device Marking for that device.

(6) Lead finish/Ball material - Orderable Devices may have multiple material finish options. Finish options are separated by a vertical ruled line. Lead finish/Ball material values may wrap to two lines if the finish value exceeds the maximum column width.

Important Information and Disclaimer: The information provided on this page represents TI's knowledge and belief as of the date that it is provided. TI bases its knowledge and belief on information provided by third parties, and makes no representation or warranty as to the accuracy of such information. Efforts are underway to better integrate information from third parties. TI has taken and continues to take reasonable steps to provide representative and accurate information but may not have conducted destructive testing or chemical analysis on incoming materials and chemicals. TI and TI suppliers consider certain information to be proprietary, and thus CAS numbers and other limited information may not be available for release.

In no event shall TI's liability arising out of such information exceed the total purchase price of the TI part(s) at issue in this document sold by TI to Customer on an annual basis.

TAPE AND REEL INFORMATION

REEL DIMENSIONS

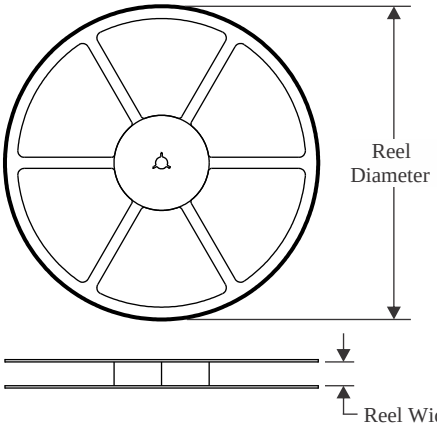

TAPE DIMENSIONS

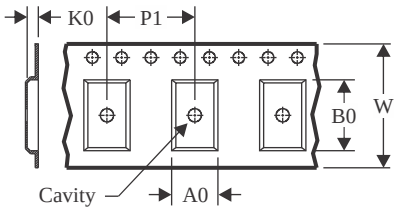

A0	Dimension designed to accommodate the component width
B0	Dimension designed to accommodate the component length
K0	Dimension designed to accommodate the component thickness
W	Overall width of the carrier tape
P1	Pitch between successive cavity centers

QUADRANT ASSIGNMENTS FOR PIN 1 ORIENTATION IN TAPE

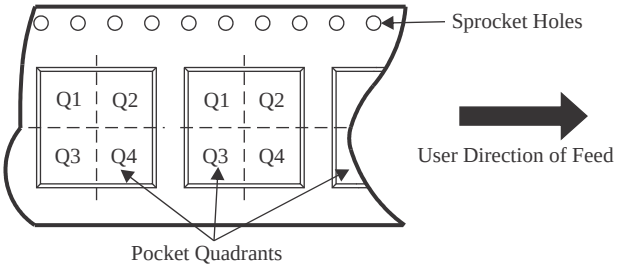

*All dimensions are nominal

Device	Package Type	Package Drawing	Pins	SPQ	Reel Diameter (mm)	Reel Width W1 (mm)	A0 (mm)	B0 (mm)	K0 (mm)	P1 (mm)	W (mm)	Pin1 Quadrant
TL2842DR	SOIC	D	14	2500	330.0	16.4	6.5	9.0	2.1	8.0	16.0	Q1
TL2842DR-8	SOIC	D	8	2500	330.0	12.4	6.4	5.2	2.1	8.0	12.0	Q1
TL2843DR	SOIC	D	14	2500	330.0	16.4	6.5	9.0	2.1	8.0	16.0	Q1
TL2843DR-8	SOIC	D	8	2500	330.0	12.4	6.4	5.2	2.1	8.0	12.0	Q1
TL2844DR	SOIC	D	14	2500	330.0	16.4	6.5	9.0	2.1	8.0	16.0	Q1
TL2844DR-8	SOIC	D	8	2500	330.0	12.4	6.4	5.2	2.1	8.0	12.0	Q1
TL2845DR	SOIC	D	14	2500	330.0	16.4	6.5	9.0	2.1	8.0	16.0	Q1
TL2845DR-8	SOIC	D	8	2500	330.0	12.4	6.4	5.2	2.1	8.0	12.0	Q1
TL3842DR	SOIC	D	14	2500	330.0	16.4	6.5	9.0	2.1	8.0	16.0	Q1
TL3842DR-8	SOIC	D	8	2500	330.0	12.4	6.4	5.2	2.1	8.0	12.0	Q1
TL3843DR	SOIC	D	14	2500	330.0	16.4	6.5	9.0	2.1	8.0	16.0	Q1
TL3843DR-8	SOIC	D	8	2500	330.0	12.4	6.4	5.2	2.1	8.0	12.0	Q1
TL3844DR	SOIC	D	14	2500	330.0	16.4	6.5	9.0	2.1	8.0	16.0	Q1
TL3844DR-8	SOIC	D	8	2500	330.0	12.4	6.4	5.2	2.1	8.0	12.0	Q1
TL3845DR	SOIC	D	14	2500	330.0	16.4	6.5	9.0	2.1	8.0	16.0	Q1
TL3845DR-8	SOIC	D	8	2500	330.0	12.4	6.4	5.2	2.1	8.0	12.0	Q1

TAPE AND REEL BOX DIMENSIONS

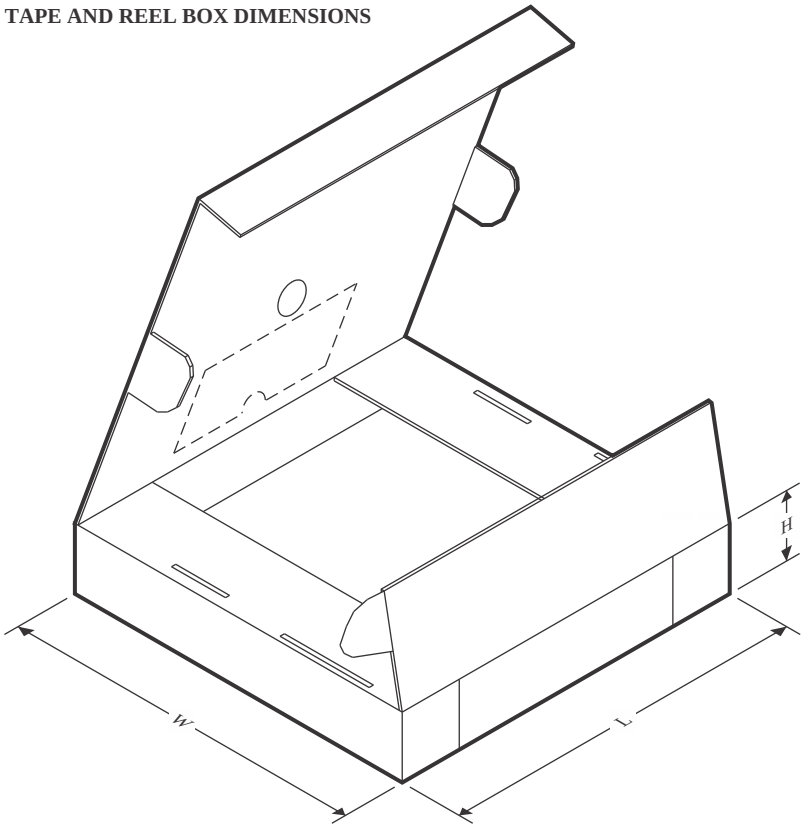

*All dimensions are nominal

Device	Package Type	Package Drawing	Pins	SPQ	Length (mm)	Width (mm)	Height (mm)
TL2842DR	SOIC	D	14	2500	356.0	356.0	35.0
TL2842DR-8	SOIC	D	8	2500	353.0	353.0	32.0
TL2843DR	SOIC	D	14	2500	356.0	356.0	35.0
TL2843DR-8	SOIC	D	8	2500	353.0	353.0	32.0
TL2844DR	SOIC	D	14	2500	353.0	353.0	32.0
TL2844DR-8	SOIC	D	8	2500	353.0	353.0	32.0
TL2845DR	SOIC	D	14	2500	356.0	356.0	35.0
TL2845DR-8	SOIC	D	8	2500	353.0	353.0	32.0
TL3842DR	SOIC	D	14	2500	356.0	356.0	35.0
TL3842DR-8	SOIC	D	8	2500	353.0	353.0	32.0
TL3843DR	SOIC	D	14	2500	356.0	356.0	35.0
TL3843DR-8	SOIC	D	8	2500	353.0	353.0	32.0
TL3844DR	SOIC	D	14	2500	353.0	353.0	32.0
TL3844DR-8	SOIC	D	8	2500	353.0	353.0	32.0
TL3845DR	SOIC	D	14	2500	356.0	356.0	35.0
TL3845DR-8	SOIC	D	8	2500	353.0	353.0	32.0

TUBE

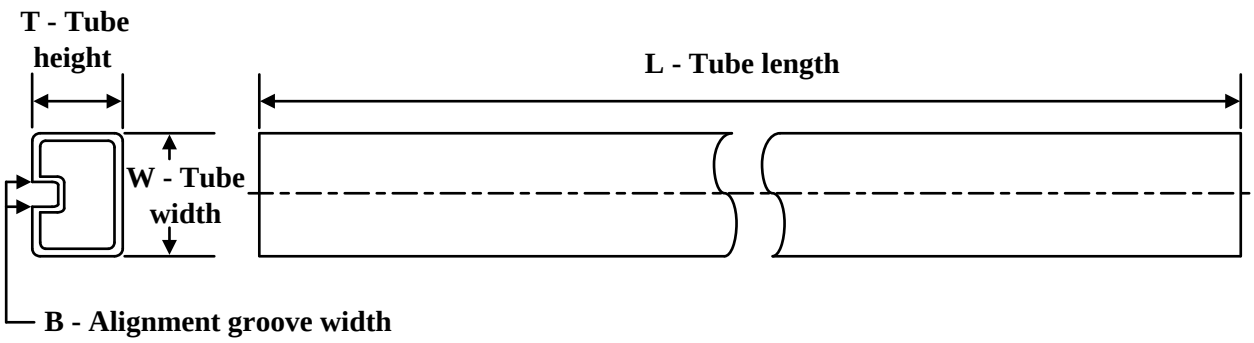

*All dimensions are nominal

Device	Package Name	Package Type	Pins	SPQ	L (mm)	W (mm)	T (µm)	B (mm)
TL2842P	P	PDIP	8	50	506	13.97	11230	4.32
TL2843P	P	PDIP	8	50	506	13.97	11230	4.32
TL2844P	P	PDIP	8	50	506	13.97	11230	4.32
TL2844PE4	P	PDIP	8	50	506	13.97	11230	4.32
TL2845P	P	PDIP	8	50	506	13.97	11230	4.32
TL3842P	P	PDIP	8	50	506	13.97	11230	4.32
TL3842P	P	PDIP	8	50	506	13.97	11230	4.32
TL3842PE4	P	PDIP	8	50	506	13.97	11230	4.32
TL3842PE4	P	PDIP	8	50	506	13.97	11230	4.32
TL3843P	P	PDIP	8	50	506	13.97	11230	4.32
TL3843P	P	PDIP	8	50	506	13.97	11230	4.32
TL3844P	P	PDIP	8	50	506	13.97	11230	4.32
TL3844P	P	PDIP	8	50	506	13.97	11230	4.32
TL3844PE4	P	PDIP	8	50	506	13.97	11230	4.32
TL3844PE4	P	PDIP	8	50	506	13.97	11230	4.32
TL3845D	D	SOIC	14	50	506.6	8	3940	4.32
TL3845P	P	PDIP	8	50	506	13.97	11230	4.32
TL3845P	P	PDIP	8	50	506	13.97	11230	4.32
TL3845PE4	P	PDIP	8	50	506	13.97	11230	4.32
TL3845PE4	P	PDIP	8	50	506	13.97	11230	4.32

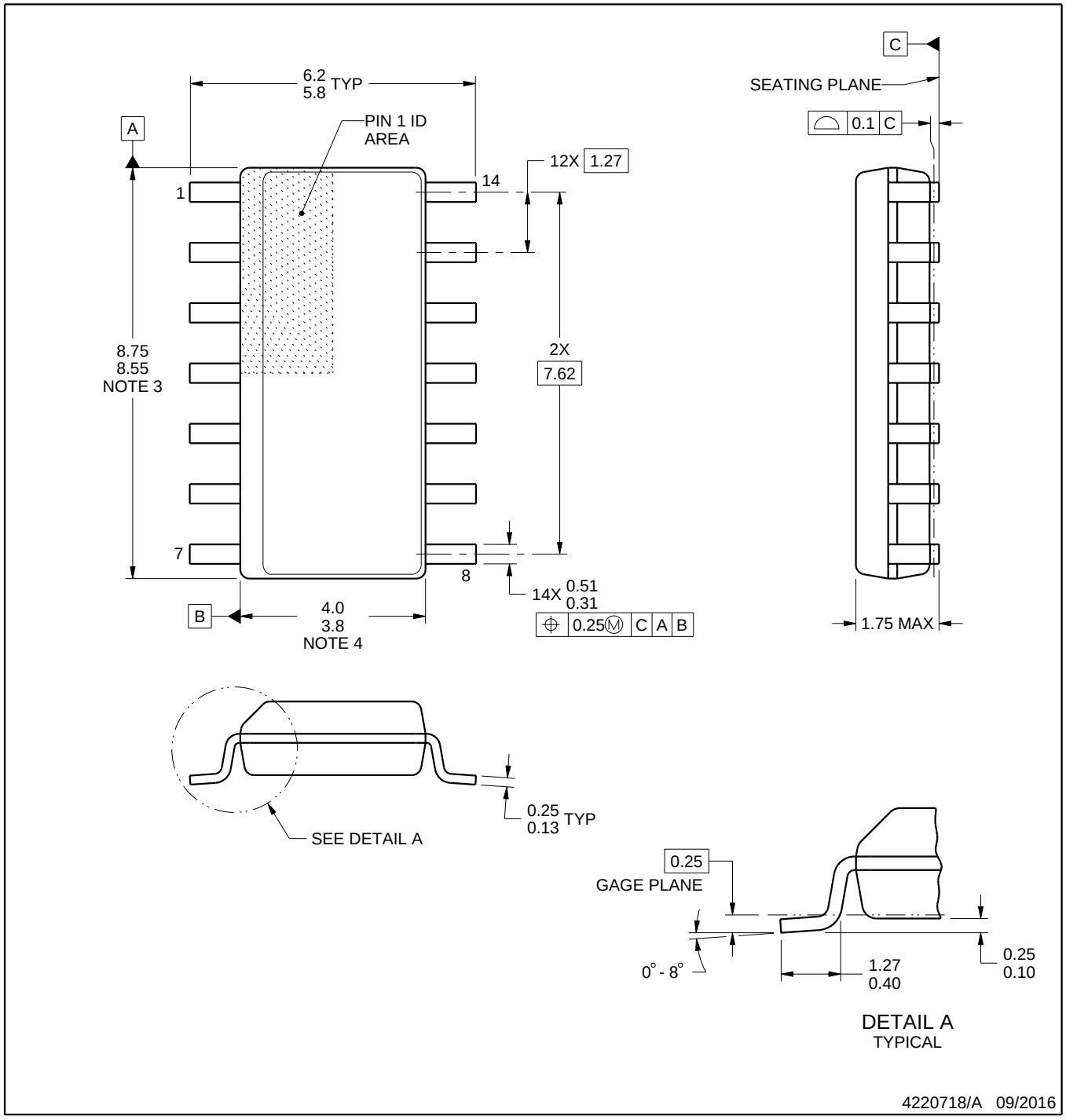

NOTES:

1. All linear dimensions are in millimeters. Dimensions in parenthesis are for reference only. Dimensioning and tolerancing per ASME Y14.5M.
2. This drawing is subject to change without notice.
3. This dimension does not include mold flash, protrusions, or gate burrs. Mold flash, protrusions, or gate burrs shall not exceed 0.15 mm, per side.
4. This dimension does not include interlead flash. Interlead flash shall not exceed 0.43 mm, per side.
5. Reference JEDEC registration MS-012, variation AB.

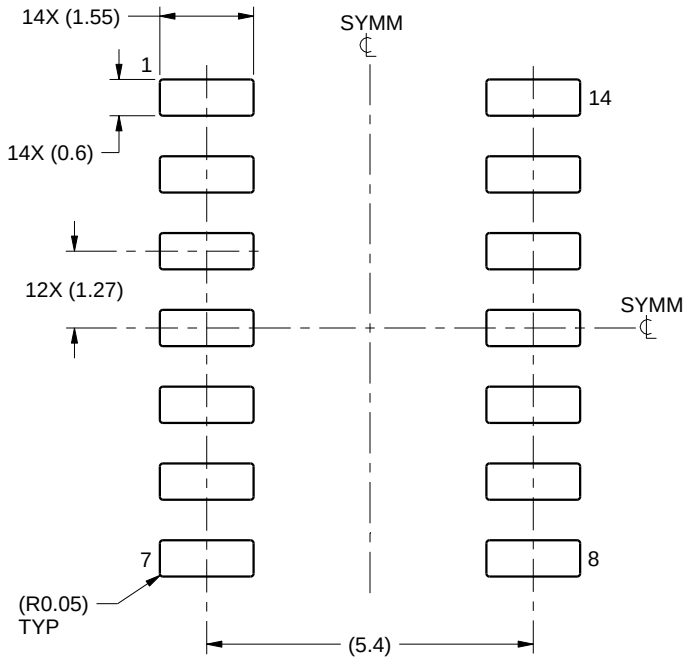

LAND PATTERN EXAMPLE
SCALE:8X

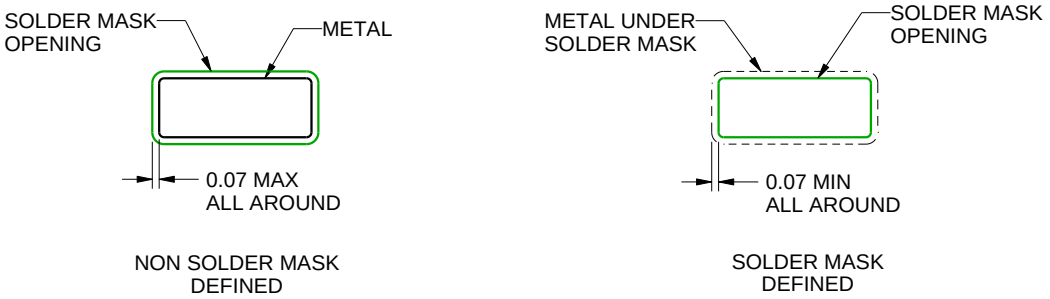

SOLDER MASK DETAILS

4220718/A 09/2016

NOTES: (continued)

6. Publication IPC-7351 may have alternate designs.
7. Solder mask tolerances between and around signal pads can vary based on board fabrication site.

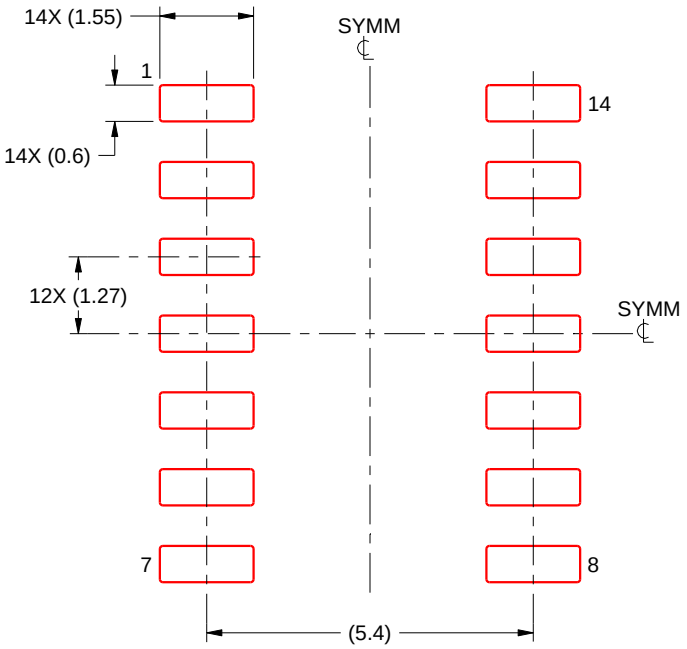

SOLDER PASTE EXAMPLE
BASED ON 0.125 mm THICK STENCIL
SCALE:8X

4220718/A 09/2016

NOTES: (continued)

8. Laser cutting apertures with trapezoidal walls and rounded corners may offer better paste release. IPC-7525 may have alternate design recommendations.
9. Board assembly site may have different recommendations for stencil design.

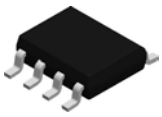

PACKAGE OUTLINE

D0008A

SOIC - 1.75 mm max height

SMALL OUTLINE INTEGRATED CIRCUIT

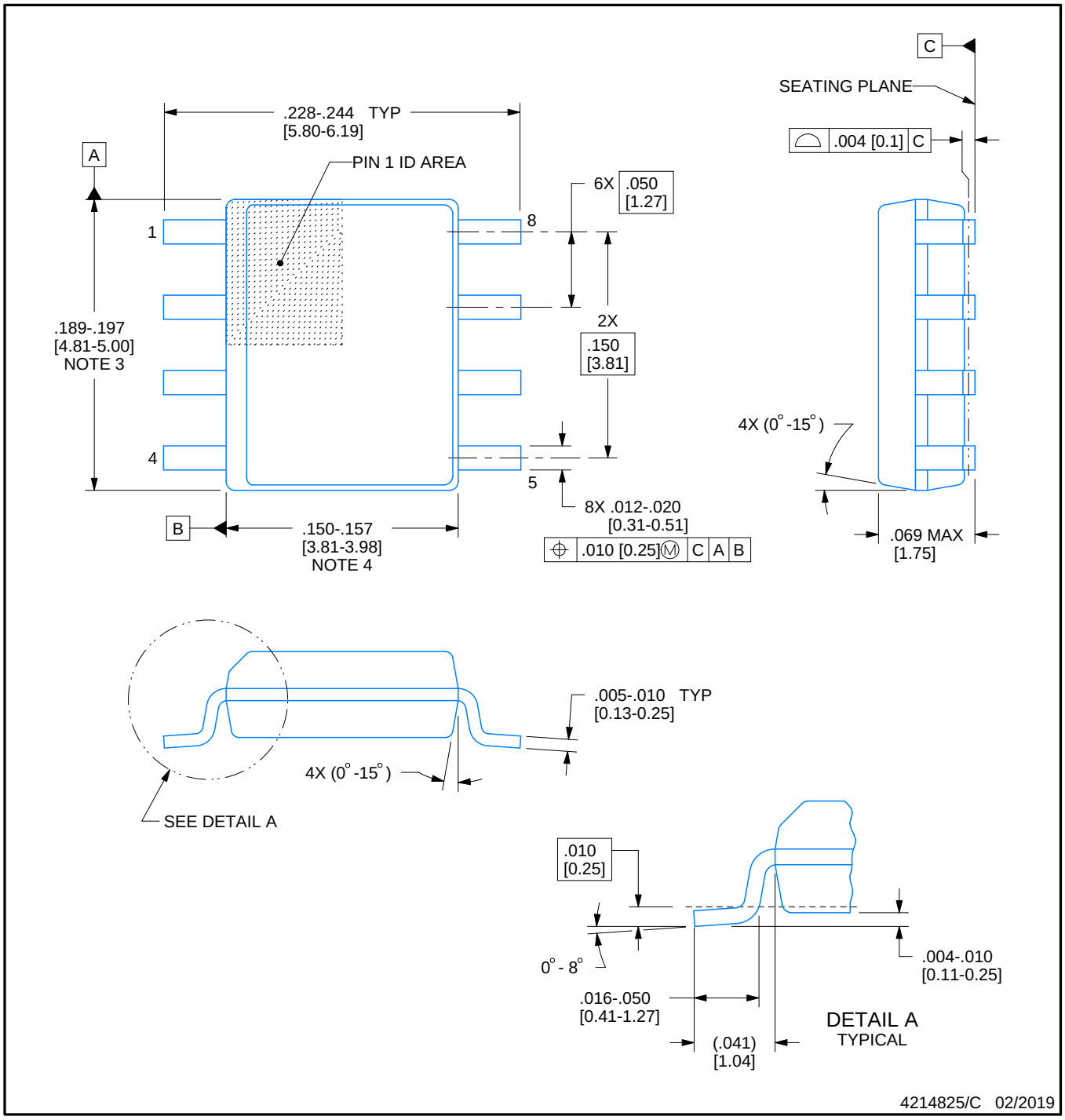

NOTES:

1. Linear dimensions are in inches [millimeters]. Dimensions in parenthesis are for reference only. Controlling dimensions are in inches. Dimensioning and tolerancing per ASME Y14.5M.
2. This drawing is subject to change without notice.
3. This dimension does not include mold flash, protrusions, or gate burrs. Mold flash, protrusions, or gate burrs shall not exceed .006 [0.15] per side.
4. This dimension does not include interlead flash.
5. Reference JEDEC registration MS-012, variation AA.

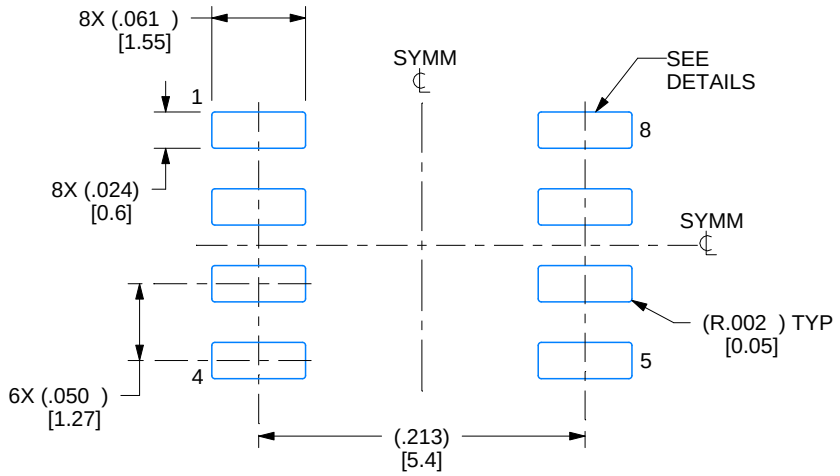

LAND PATTERN EXAMPLE
EXPOSED METAL SHOWN
SCALE:8X

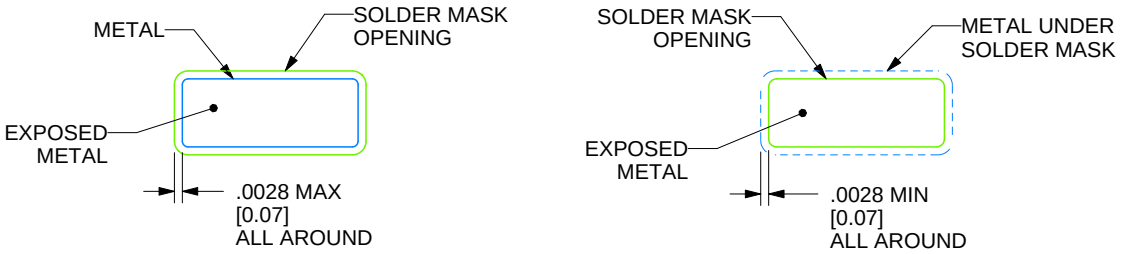

SOLDER MASK DETAILS

4214825/C 02/2019

NOTES: (continued)

6. Publication IPC-7351 may have alternate designs.
7. Solder mask tolerances between and around signal pads can vary based on board fabrication site.

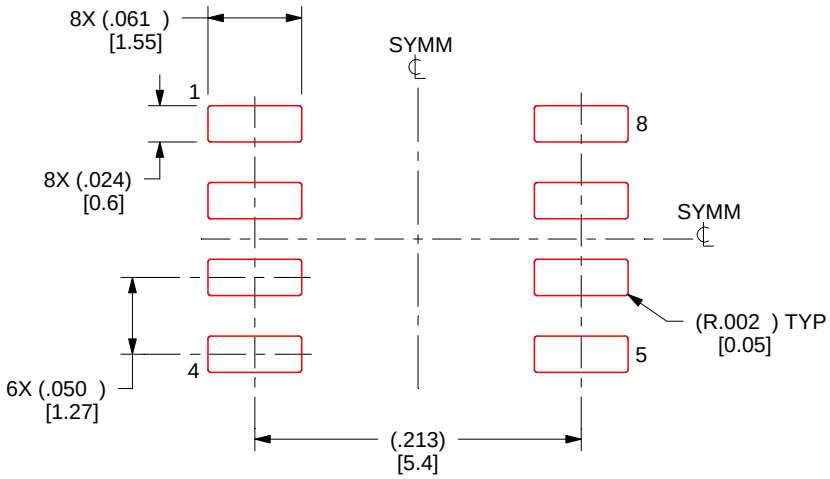

SOLDER PASTE EXAMPLE
BASED ON .005 INCH [0.125 MM] THICK STENCIL
SCALE:8X

4214825/C 02/2019

NOTES: (continued)

8. Laser cutting apertures with trapezoidal walls and rounded corners may offer better paste release. IPC-7525 may have alternate design recommendations.
9. Board assembly site may have different recommendations for stencil design.

P (R–PDIP–T8) PLASTIC DUAL–IN–LINE PACKAGE

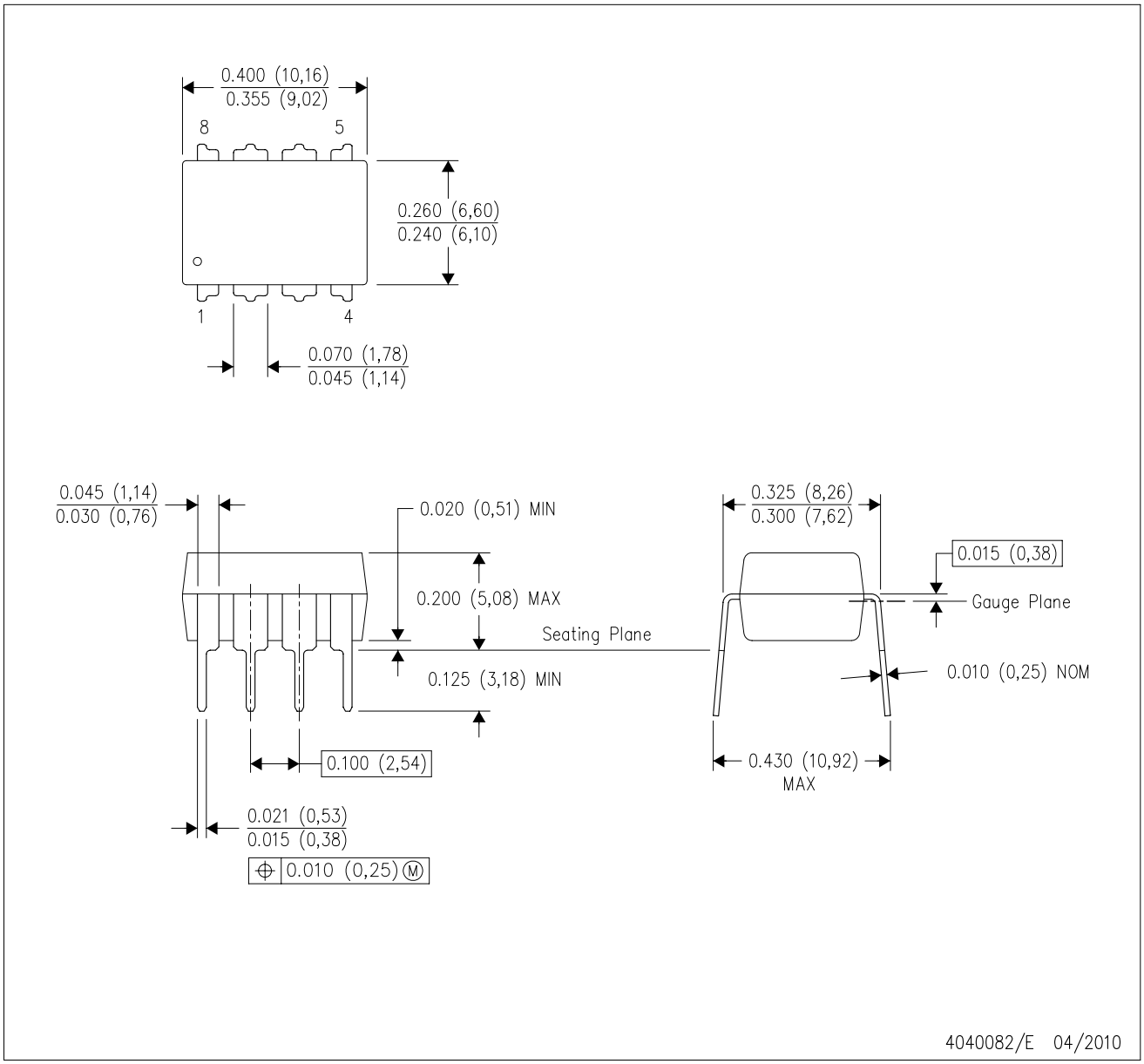

NOTES:
A. All linear dimensions are in inches (millimeters).
B. This drawing is subject to change without notice.
C. Falls within JEDEC MS–001 variation BA.

IMPORTANT NOTICE AND DISCLAIMER

TI PROVIDES TECHNICAL AND RELIABILITY DATA (INCLUDING DATA SHEETS), DESIGN RESOURCES (INCLUDING REFERENCE DESIGNS), APPLICATION OR OTHER DESIGN ADVICE, WEB TOOLS, SAFETY INFORMATION, AND OTHER RESOURCES “AS IS” AND WITH ALL FAULTS, AND DISCLAIMS ALL WARRANTIES, EXPRESS AND IMPLIED, INCLUDING WITHOUT LIMITATION ANY IMPLIED WARRANTIES OF MERCHANTABILITY, FITNESS FOR A PARTICULAR PURPOSE OR NON-INFRINGEMENT OF THIRD PARTY INTELLECTUAL PROPERTY RIGHTS.

These resources are intended for skilled developers designing with TI products. You are solely responsible for (1) selecting the appropriate TI products for your application, (2) designing, validating and testing your application, and (3) ensuring your application meets applicable standards, and any other safety, security, regulatory or other requirements.

These resources are subject to change without notice. TI grants you permission to use these resources only for development of an application that uses the TI products described in the resource. Other reproduction and display of these resources is prohibited. No license is granted to any other TI intellectual property right or to any third party intellectual property right. TI disclaims responsibility for, and you will fully indemnify TI and its representatives against, any claims, damages, costs, losses, and liabilities arising out of your use of these resources.

TI’s products are provided subject to TI’s Terms of Sale or other applicable terms available either on ti.com or provided in conjunction with such TI products. TI’s provision of these resources does not expand or otherwise alter TI’s applicable warranties or warranty disclaimers for TI products.

TI objects to and rejects any additional or different terms you may have proposed.

Mailing Address: Texas Instruments, Post Office Box 655303, Dallas, Texas 75265
Copyright © 2024, Texas Instruments Incorporated