TLV62568 1-A High Efficiency Synchronous Buck Converter in SOT Package

1 Features

- Up to 95% Efficiency
- Low $R_{DS(ON)}$ Switches 150 mΩ / 100 mΩ
- 2.5-V to 5.5-V Input Voltage Range
- Adjustable Output Voltage from 0.6 V to V_{IN}
- Power Save Mode for Light Load Efficiency
- 100% Duty Cycle for Lowest Dropout
- 35-µA Operating Quiescent Current
- 1.5-MHz Switching Frequency
- Power Good Output
- Over Current Protection
- Internal Soft Startup
- Thermal Shutdown Protection
- Available in SOT Package
- Pin-to-Pin Compatible with TLV62569
- Create a Custom Design Using the TLV62568 With the WEBENCH® Power Designer

2 Applications

- General Purpose POL Supply
- Network Video Camera
- Set Top Box
- Wireless Router

3 Description

The TLV62568 device is a synchronous step-down buck DC-DC converter optimized for high efficiency and compact solution size. The device integrates switches capable of delivering an output current up to 1 A.

At medium to heavy loads, the device operates in pulse width modulation (PWM) mode with 1.5-MHz switching frequency. At light load, the device automatically enters Power Save Mode (PSM) to maintain high efficiency over the entire load current range. In shutdown, the current consumption is reduced to less than 2 µA.

The TLV62568 provides an adjustable output voltage via an external resistor divider. An internal soft start circuit limits the inrush current during startup. Other features like over current protection, thermal shutdown protection and power good are built-in. The device is available in a SOT23 and SOT563 package.

Device Information(1)

PART NUMBER	PACKAGE	BODY SIZE (NOM)
TLV62568	SOT-23 (5)	2.90 mm × 2.80 mm
TLV62568P	SOT-23 (6)	
TLV62568	SOT563 (6)	1.60 mm x 1.60 mm
TLV62568P	SOT563 (6)	

(1) For all available packages, see the orderable addendum at the end of the datasheet.

Device Comparison

PART NUMBER	FUNCTION	PACKAGE MARKING
TLV62568DBV	-	14VF
TLV62568PDDC	Power Good	9X
TLV62568DRL	-	18L
TLV62568PDRL	Power Good	18N

Simplified Schematic

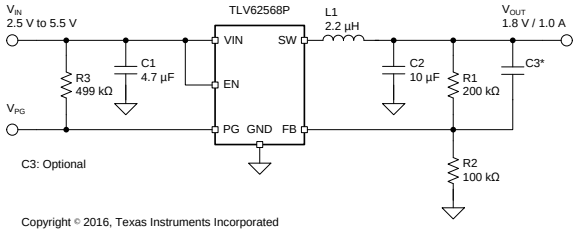

Copyright © 2016, Texas Instruments Incorporated

Efficiency at 5-V Input Voltage

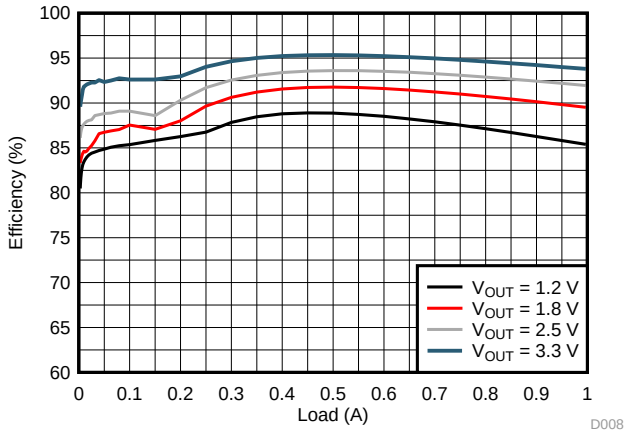

An IMPORTANT NOTICE at the end of this data sheet addresses availability, warranty, changes, use in safety-critical applications, intellectual property matters and other important disclaimers. PRODUCTION DATA.

Table of Contents

1 **Features** ... 1
2 **Applications** ... 1
3 **Description** ... 1
4 **Revision History** ... 2
5 **Pin Configuration and Functions** ... 3
6 **Specifications** ... 4
6.1 Absolute Maximum Ratings ... 4
6.2 ESD Ratings ... 4
6.3 Recommended Operating Conditions ... 4
6.4 Thermal Information ... 4
6.5 Electrical Characteristics ... 5
6.6 Typical Characteristics ... 6
7 **Detailed Description** ... 7
7.1 Overview ... 7
7.2 Functional Block Diagram ... 7
7.3 Feature Description ... 7
7.4 Device Functional Modes ... 8
8 **Application and Implementation** ... 9
8.1 Application Information ... 9
8.2 Typical Application ... 9
9 **Power Supply Recommendations** ... 14
10 **Layout** ... 15
10.1 Layout Guidelines ... 15
10.2 Layout Example ... 15
10.3 Thermal Considerations ... 15
11 **Device and Documentation Support** ... 16
11.1 Device Support ... 16
11.2 Documentation Support ... 16
11.3 Receiving Notification of Documentation Updates 16
11.4 Community Resources ... 16
11.5 Trademarks ... 16
11.6 Electrostatic Discharge Caution ... 17
11.7 Glossary ... 17
12 **Mechanical, Packaging, and Orderable Information** ... 17

4 Revision History

Changes from Revision A (April 2017) to Revision B — **Page**

- Added WEBENCH links to data sheet ... 1
- Changed TLV62568PDDC to production status ... 1
- Added DDC package thermal information. ... 4
- Changed 1.2 V From: MIN value To: MAX value for High-level threshold at EN pin ... 5

Changes from Original (November 2016) to Revision A — **Page**

- Changed TLV62568DRL and TLV62568PDRL to production status. ... 1
- Moved Device Comparison table to page 1 ... 1
- Added DRL package thermal information ... 4
- Added startup time of TLV62568DRL, TLV62568PDRL ... 5
- Added TLV62568PDRL layout. ... 15

Copyright © 2016–2017, Texas Instruments Incorporated

5 Pin Configuration and Functions

SOT23-5
DBV Package
(Top View)

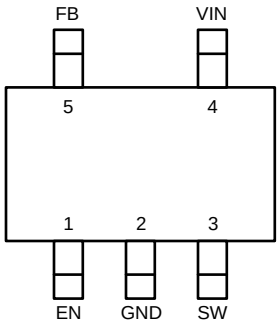

SOT23-6
DDC Package
(Top View)

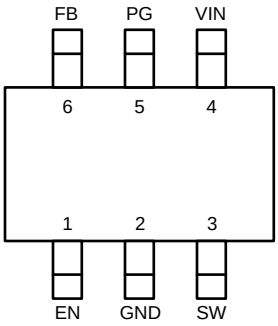

SOT563-6
DRL Package
(Top View)

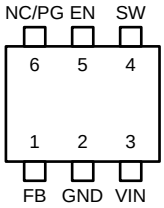

Pin Functions

PIN NUMBER				I/O/PWR	DESCRIPTION
NAME	SOT23-5	SOT23-6	SOT563-6		
EN	1	1	5	I	Device enable logic input. Logic high enables the device, logic low disables the device and turns it into shutdown. Do not leave floating.
GND	2	2	2	PWR	Ground pin.
SW	3	3	4	PWR	Switch pin connected to the internal FET switches and inductor terminal. Connect the inductor of the output filter to this pin.
VIN	4	4	3	PWR	Power supply voltage input.
PG	-	5	6	O	Power good open drain output pin for TLV62568P. The pull-up resistor should not be connected to any voltage higher than 5.5V. If it's not used, leave the pin floating.
FB	5	6	1	I	Feedback pin for the internal control loop. Connect this pin to an external feedback divider.
NC	-	-	6	O	No connection pin for TLV62568DRL. The pin can be connected to the output. Or leave it floating.

Copyright © 2016–2017, Texas Instruments Incorporated

6 Specifications

6.1 Absolute Maximum Ratings

Over operating temperature range (unless otherwise noted)[1]

		MIN	MAX	UNIT
Voltage[2]	VIN, EN, PG	–0.3	6	V
	SW (DC)	–0.3	V_{IN}+0.3	V
	SW (AC, less than 10 ns)[3]	–3.0	9	V
	FB	–0.3	5.5	V
Operating junction temperature, T_J		–40	150	°C
Storage temperature, T_{stg}		–65	150	°C

(1) Stresses beyond those listed under *absolute maximum ratings* may cause permanent damage to the device. Functional operation of the device at these or any other conditions beyond those indicated under *recommended operating conditions* is not implied. Exposure to absolute–maximum–rated conditions for extended periods may affect device reliability.
(2) All voltage values are with respect to network ground terminal.
(3) While switching.

6.2 ESD Ratings

			VALUE	UNIT
$V_{(ESD)}$	Electrostatic discharge	Human-body model (HBM), per ANSI/ESDA/JEDEC JS-001[1]	±2000	V
		Charged-device model (CDM), per JEDEC specification JESD22-C101[2]	±500	V

(1) JEDEC document JEP155 states that 500-V HBM allows safe manufacturing with a standard ESD control process.
(2) JEDEC document JEP157 states that 250-V CDM allows safe manufacturing with a standard ESD control process.

6.3 Recommended Operating Conditions[1]

		MIN	TYP	MAX	UNIT
V_{IN}	Input voltage	2.5		5.5	V
V_{OUT}	Output voltage	0.6		V_{IN}	V
I_{OUT}	Output current			1	A
T_J	Operating junction temperature	–40		125	°C
I_{SINK_PG}	Sink current at PG pin			1	mA

(1) Refer to the *Application and Implementation* section for further information.

6.4 Thermal Information

THERMAL METRIC[1]		DBV (5 Pins)	DDC (6 pins)	DRL (6 pins)	UNIT
$R_{\theta JA}$	Junction-to-ambient thermal resistance	191.6	121.6	149.8	°C/W
$R_{\theta JC(top)}$	Junction-to-case (top) thermal resistance	141.4	69.1	45.7	°C/W
$R_{\theta JB}$	Junction-to-board thermal resistance	44.5	45.5	31.1	°C/W
ψ_{JT}	Junction-to-top characterization parameter	34.5	22.3	1.3	°C/W
ψ_{JB}	Junction-to-board characterization parameter	43.9	46.0	31.7	°C/W
$R_{\theta JC(bot)}$	Junction-to-case (bottom) thermal resistance	N/A	N/A	N/A	°C/W

(1) For more information about traditional and new thermal metrics, see the *Semiconductor and IC Package Thermal Metrics* application report.

Copyright © 2016–2017, Texas Instruments Incorporated

6.5 Electrical Characteristics

V_{IN} = 5 V, T_J = 25°C, unless otherwise noted

PARAMETER		TEST CONDITIONS	MIN	TYP	MAX	UNIT
SUPPLY						
I_Q	Quiescent current into VIN pin	Not switching		35		uA
I_{SD}	Shutdown current into VIN pin	EN = 0 V		0.1	2	µA
V_{UVLO}	Under voltage lock out	V_{IN} falling		2.3	2.45	V
	Under voltage lock out hysteresis			100		mV
T_{JSD}	Thermal shutdown threshold	Junction temperature rising		150		°C
		Junction temperature falling		130		
LOGIC INTERFACE						
V_{IH}	High-level threshold at EN pin	2.5 V ≤ V_{IN} ≤ 5.5 V		0.95	1.2	V
V_{IL}	Low-level threshold at EN pin	2.5 V ≤ V_{IN} ≤ 5.5 V	0.4	0.85		V
t_{SS}	Soft startup time	TLV62568DBV		700		µs
		TLV62568DRL, TLV62568PDRL, TLV62568PDDC		900		
V_{PG}	Power good threshold, TLV62568P	V_{FB} rising, referenced to V_{FB} nominal		95%		
		V_{FB} falling, referenced to V_{FB} nominal		90%		
$V_{PG,OL}$	Power good low-level output voltage	I_{SINK} = 1 mA			0.4	V
$I_{PG,LKG}$	Input leakage current into PG pin	V_{PG} = 5 V		0.01		µA
$t_{PG,DLY}$	Power good delay time	V_{FB} falling		40		µs
OUTPUT						
V_{FB}	Feedback regulation voltage		0.588	0.6	0.612	V
$R_{DS(on)}$	High-side FET on resistance			150		mΩ
	Low-side FET on resistance			100		
I_{LIM}	High-side FET current limit		1.5			A
f_{SW}	Switching frequency	V_{OUT} = 1.8 V		1.5		MHz

Copyright © 2016–2017, Texas Instruments Incorporated

6.6 Typical Characteristics

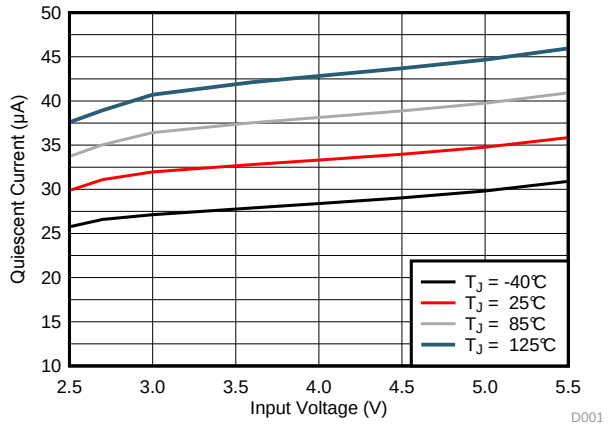

Figure 1. Quiescent Current vs Input Voltage

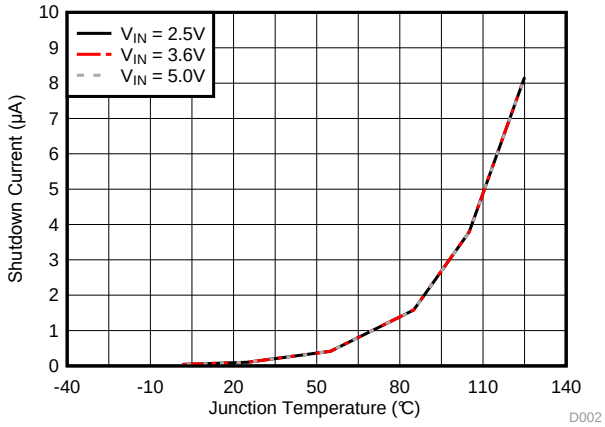

Figure 2. Shutdown Current vs Junction Temperature

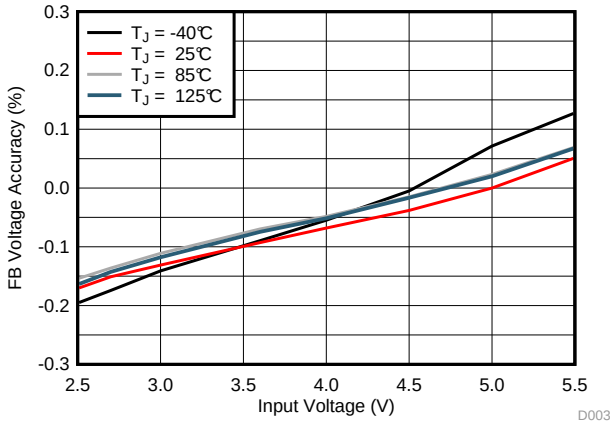

Figure 3. FB Voltage Accuracy

Copyright © 2016–2017, Texas Instruments Incorporated

7 Detailed Description

7.1 Overview

The TLV62568 is a high-efficiency synchronous step-down converter. The device operates with an adaptive off-time with peak current control scheme. The device operates at typically 1.5-MHz frequency pulse width modulation (PWM) at moderate to heavy load currents. Based on the V_{IN}/V_{OUT} ratio, a simple circuit sets the required off time for the low-side MOSFET. It makes the switching frequency relatively constant regardless of the variation of input voltage, output voltage, and load current.

7.2 Functional Block Diagram

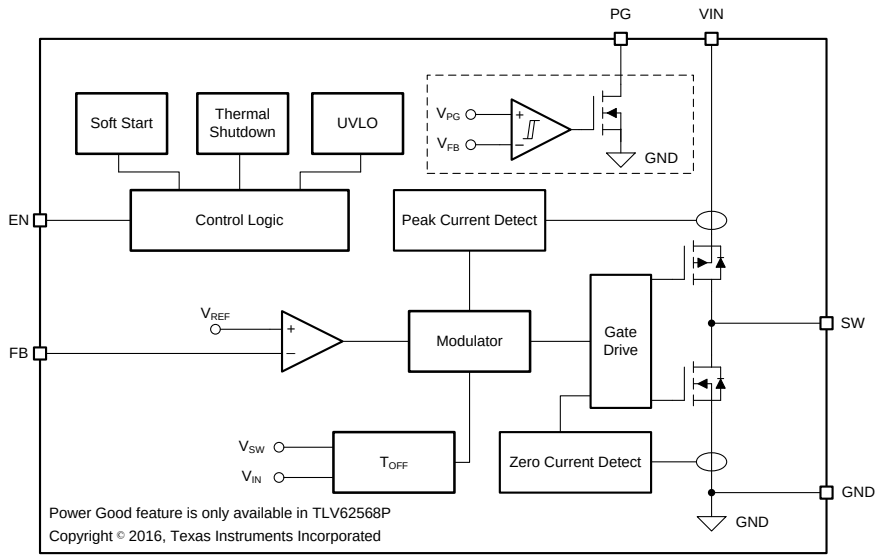

Figure 4. TLV62568 Functional Block Diagram

7.3 Feature Description

7.3.1 Power Save Mode

The device automatically enters Power Save Mode to improve efficiency at light load when the inductor current becomes discontinuous. In Power Save Mode, the converter reduces switching frequency and minimizes current consumption. In Power Save Mode, the output voltage rises slightly above the nominal output voltage. This effect is minimized by increasing the output capacitor.

7.3.2 100% Duty Cycle Low Dropout Operation

The device offers a low input-to-output voltage differential by entering 100% duty cycle mode. In this mode, the high-side MOSFET switch is constantly turned on and the low-side MOSFET is switched off. The minimum input voltage to maintain output regulation, depending on the load current and output voltage, is calculated as:

$$V_{IN(MIN)} = V_{OUT} + I_{OUT} \times (R_{DS(ON)} + R_L) \quad (1)$$

where

- $R_{DS(ON)}$ = High side FET on-resistance
- R_L = Inductor ohmic resistance (DCR)

7.3.3 Soft Startup

After enabling the device, internal soft startup circuitry ramps up the output voltage which reaches nominal output voltage during a startup time. This avoids excessive inrush current and creates a smooth output voltage rise slope. It also prevents excessive voltage drops of primary cells and rechargeable batteries with high internal impedance.

Feature Description (continued)

The TLV62568 is able to start into a pre-biased output capacitor. The converter starts with the applied bias voltage and ramps the output voltage to its nominal value.

7.3.4 Switch Current Limit

The switch current limit prevents the device from high inductor current and drawing excessive current from a battery or input voltage rail. Excessive current might occur with a heavy load or shorted output circuit condition. The TLV62568 adopts the peak current control by sensing the current of the high-side switch. Once the high-side switch current limit is reached, the high-side switch is turned off and low-side switch is turned on to ramp down the inductor current with an adaptive off-time.

7.3.5 Under Voltage Lockout

To avoid mis-operation of the device at low input voltages, under voltage lockout is implemented that shuts down the device at voltages lower than V_{UVLO} with V_{HYS_UVLO} hysteresis.

7.3.6 Thermal Shutdown

The device enters thermal shutdown once the junction temperature exceeds the thermal shutdown rising threshold, T_{JSD}. Once the junction temperature falls below the falling threshold, the device returns to normal operation automatically.

7.4 Device Functional Modes

7.4.1 Enabling/Disabling the Device

The device is enabled by setting the EN input to a logic High. Accordingly, a logic Low disables the device. If the device is enabled, the internal power stage starts switching and regulates the output voltage to the set point voltage. The EN input must be terminated and should not be left floating.

7.4.2 Power Good

The TLV62568P has a power good output. The PG pin goes high impedance once the output is above 95% of the nominal voltage, and is driven low once the output voltage falls below typically 90% of the nominal voltage. The PG pin is an open-drain output and is specified to sink up to 1 mA. The power good output requires a pull-up resistor connecting to any voltage rail less than 5.5 V. The PG signal can be used for sequencing of multiple rails by connecting it to the EN pin of other converters. Leave the PG pin unconnected when not used.

Table 1. PG Pin Logic

DEVICE CONDITIONS		LOGIC STATUS	
		HIGH Z	LOW
Enable	EN = High, $V_{FB} \geq V_{PG}$	√	
	EN = High, $V_{FB} \leq V_{PG}$		√
Shutdown	EN = Low		√
Thermal Shutdown	$T_J > T_{JSD}$		√
UVLO	$1.4\ V < V_{IN} < V_{UVLO}$		√
Power Supply Removal	$V_{IN} \leq 1.4\ V$	√	

Copyright © 2016–2017, Texas Instruments Incorporated

8 Application and Implementation

NOTE

Information in the following applications sections is not part of the TI component specification, and TI does not warrant its accuracy or completeness. TI's customers are responsible for determining suitability of components for their purposes. Customers should validate and test their design implementation to confirm system functionality.

8.1 Application Information

The following section discusses the design of the external components to complete the power supply design for several input and output voltage options by using typical applications as a reference.

8.2 Typical Application

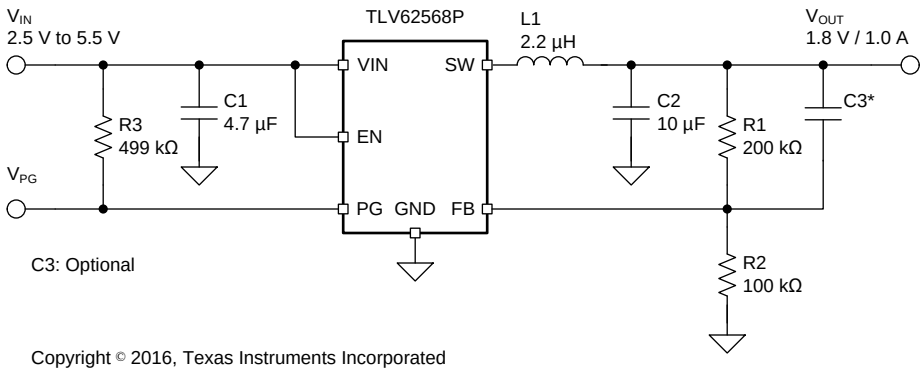

Figure 5. TLV62568 1.8-V Output Application

8.2.1 Design Requirements

For this design example, use the parameters listed in Table 2 as the input parameters.

Table 2. Design Parameters

DESIGN PARAMETER	EXAMPLE VALUE
Input voltage	2.5 V to 5.5 V
Output voltage	1.8 V
Maximum output current	1.0 A

Table 3 lists the components used for the example.

Table 3. List of Components

REFERENCE	DESCRIPTION	MANUFACTURER (1)
C1	4.7 µF, Ceramic Capacitor, 10 V, X7R, size 0805, GRM21BR71A475KA73L	Murata
C2	10 µF, Ceramic Capacitor, 10 V, X7R, size 0805, GRM21BR71A106KE51L	Murata
L1	2.2 µH, Power Inductor, SDER041H-2R2MS	Cyntec
R1,R2,R3	Chip resistor,1%,size 0603	Std.
C3	Optional, 6.8 pF if it is needed	Std.

(1) See *Third-party Products Disclaimer*

8.2.2 Detailed Design Procedure

8.2.2.1 Custom Design With WEBENCH® Tools

Click here to create a custom design using the TLV62568 device with the WEBENCH® Power Designer.

1. Start by entering the input voltage (V_{IN}), output voltage (V_{OUT}), and output current (I_{OUT}) requirements.
2. Optimize the design for key parameters such as efficiency, footprint, and cost using the optimizer dial.
3. Compare the generated design with other possible solutions from Texas Instruments.

The WEBENCH Power Designer provides a customized schematic along with a list of materials with real-time pricing and component availability.

In most cases, these actions are available:

- Run electrical simulations to see important waveforms and circuit performance
- Run thermal simulations to understand board thermal performance
- Export customized schematic and layout into popular CAD formats
- Print PDF reports for the design, and share the design with colleagues

Get more information about WEBENCH tools at www.ti.com/WEBENCH.

8.2.2.2 Setting the Output Voltage

An external resistor divider is used to set output voltage according to Equation 2.

When sizing R2, in order to achieve low current consumption and acceptable noise sensitivity, use a maximum of 200 kΩ for R2. Larger currents through R2 improve noise sensitivity and output voltage accuracy but increase current consumption.

$$V_{OUT} = V_{FB} \times \left(1 + \frac{R1}{R2}\right) = 0.6V \times \left(1 + \frac{R1}{R2}\right) \tag{2}$$

A feed forward capacitor, C3 improves the loop bandwidth to make a fast transient response (shown in Figure 19). 6.8-pF capacitance is recommended for R2 of 100-kΩ resistance. A more detailed discussion on the optimization for stability vs. transient response can be found in SLVA289.

8.2.2.3 Output Filter Design

The inductor and output capacitor together provide a low-pass filter. To simplify this process, Table 4 outlines possible inductor and capacitor value combinations. Checked cells represent combinations that are proven for stability by simulation and lab test. Further combinations should be checked for each individual application.

Table 4. Matrix of Output Capacitor and Inductor Combinations

V_{OUT} [V]	L [µH] (1)	C_{OUT} [µF] (2)				
		4.7	10	22	2x 22	100
0.6 ≤ V_{OUT} < 1.2	1				+	
	2.2				++ (3)	
1.2 ≤ V_{OUT} < 1.8	1			+	+	
	2.2			++ (3)	+	
1.8 ≤ V_{OUT}	1		+	+	+	
	2.2		++ (3)	+	+	

(1) Inductor tolerance and current de-rating is anticipated. The effective inductance can vary by +20% and -30%.
(2) Capacitor tolerance and bias voltage de-rating is anticipated. The effective capacitance can vary by +20% and -50%.
(3) This LC combination is the standard value and recommended for most applications.

Copyright © 2016–2017, Texas Instruments Incorporated

8.2.2.4 Inductor Selection

The main parameters for inductor selection is inductor value and then saturation current of the inductor. To calculate the maximum inductor current under static load conditions, Equation 3 is given:

$$I_{L,MAX} = I_{OUT,MAX} + \frac{\Delta I_L}{2}$$

$$\Delta I_L = V_{OUT} \times \frac{1 - \frac{V_{OUT}}{V_{IN}}}{L \times f_{SW}}$$

where:

- $I_{OUT,MAX}$ is the maximum output current
- ΔI_L is the inductor current ripple
- f_{SW} is the switching frequency
- L is the inductor value (3)

It is recommended to choose a saturation current for the inductor that is approximately 20% to 30% higher than $I_{L,MAX}$. In addition, DC resistance and size should also be taken into account when selecting an appropriate inductor.

8.2.2.5 Input and Output Capacitor Selection

The architecture of the TLV62568 allows use of tiny ceramic-type output capacitors with low equivalent series resistance (ESR). These capacitors provide low output voltage ripple and are thus recommended. To keep its resistance up to high frequencies and to achieve narrow capacitance variation with temperature, it is recommended to use X7R or X5R dielectric.

The input capacitor is the low impedance energy source for the converter that helps provide stable operation. A low ESR multilayer ceramic capacitor is recommended for best filtering. For most applications, 4.7-µF input capacitance is sufficient; a larger value reduces input voltage ripple.

The TLV62568 is designed to operate with an output capacitor of 10 µF to 47 µF, as outlined in Table 4.

8.2.3 Application Performance Curves

V_{IN} = 5 V, V_{OUT} = 1.8 V, L = 2.2 µH, T_A = 25°C, unless otherwise noted.

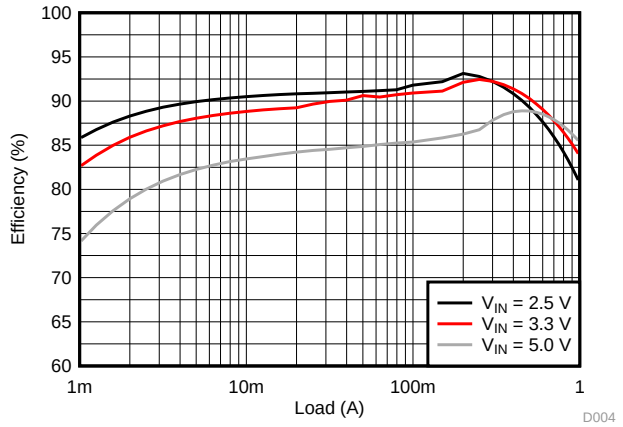

Figure 6. 1.2-V Output Efficiency

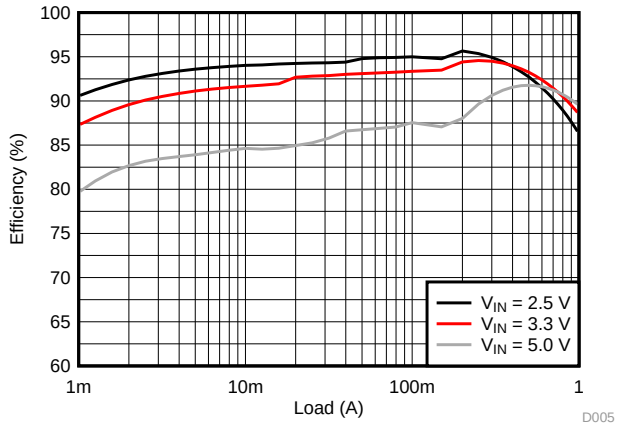

Figure 7. 1.8-V Output Efficiency

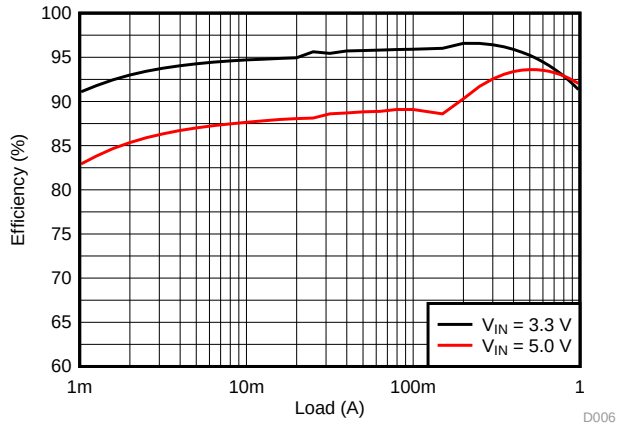

Figure 8. 2.5-V Output Efficiency

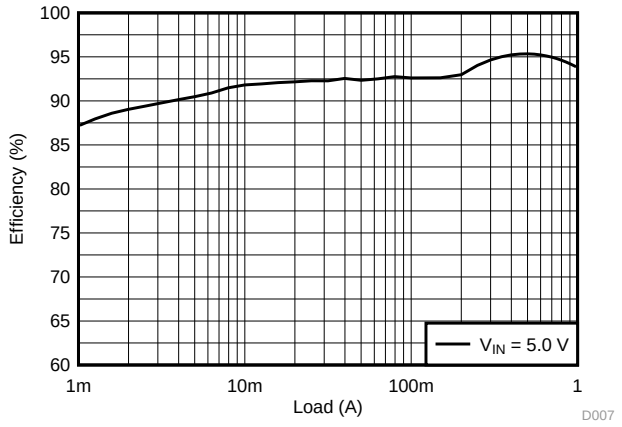

Figure 9. 3.3-V Output Efficiency

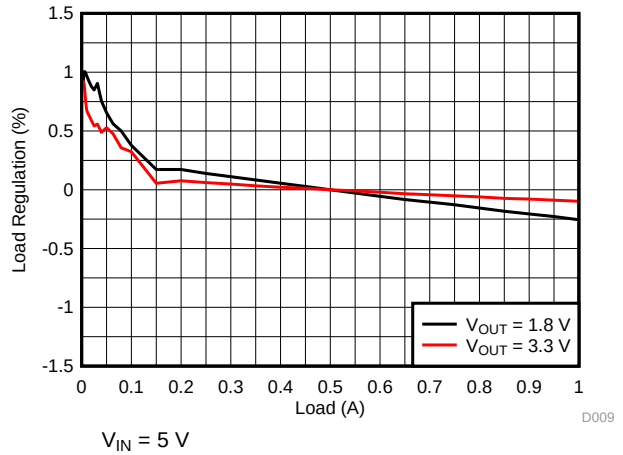

V_{IN} = 5 V

Figure 10. Load Regulation

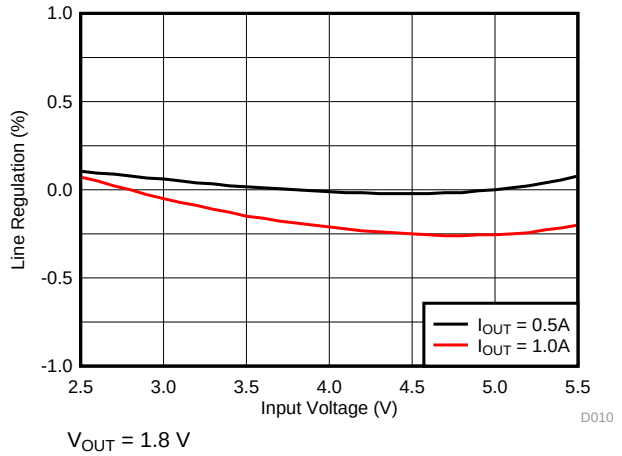

V_{OUT} = 1.8 V

Figure 11. Line Regulation

Copyright © 2016–2017, Texas Instruments Incorporated

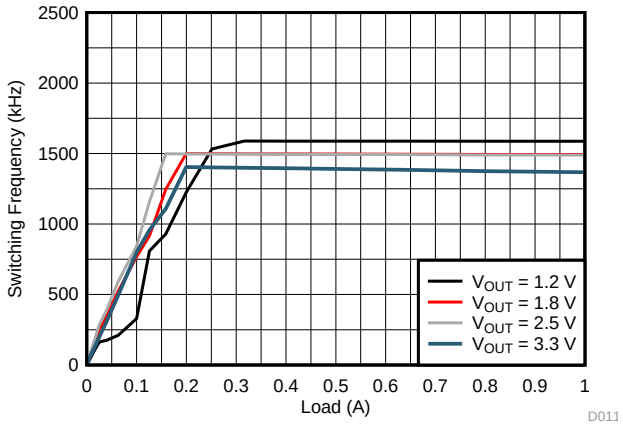

V_{IN} = 5 V

Figure 12. Switching Frequency vs Load

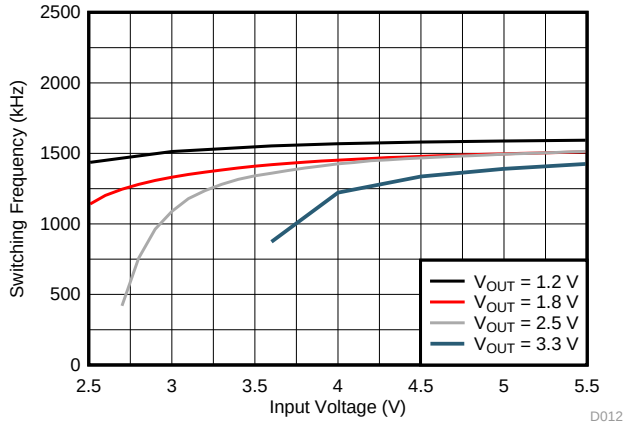

I_{OUT} = 0.5 A

Figure 13. Switching Frequency vs Input Voltage

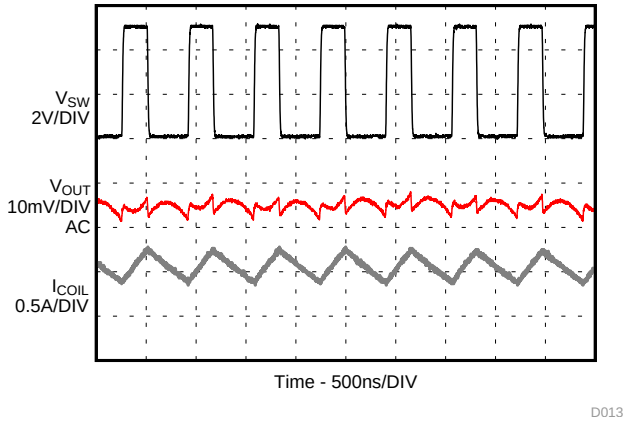

I_{OUT} = 0.5 A

Figure 14. PWM Operation

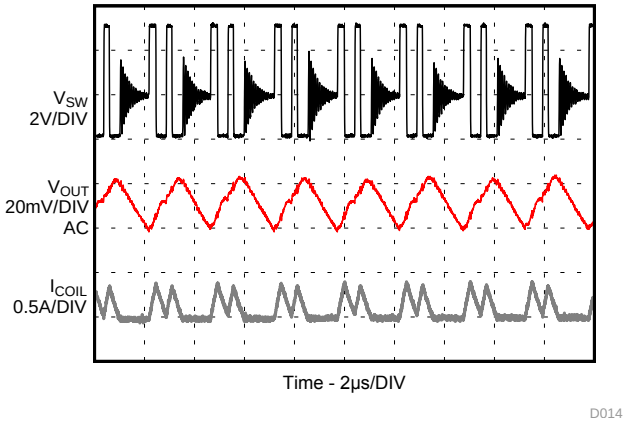

I_{OUT} = 0.1 A

Figure 15. Power Save Mode Operation

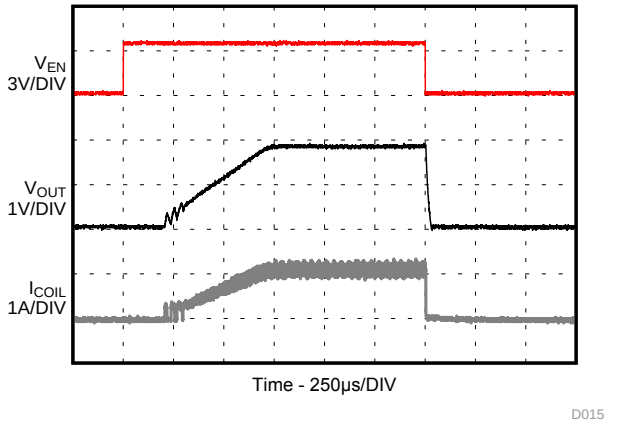

I_{OUT} = 1 A

Figure 16. Startup with Load

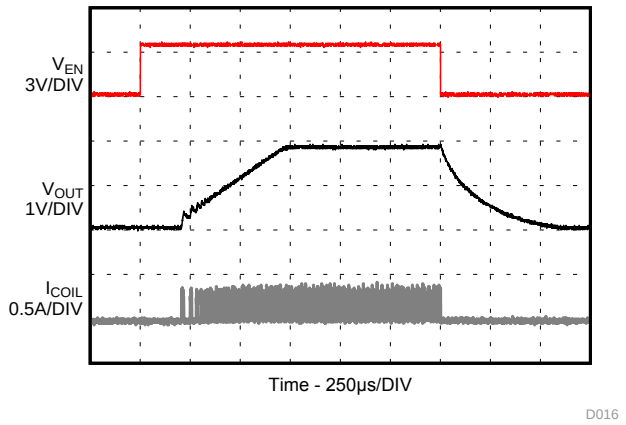

I_{OUT} = 0.1 A

Figure 17. Startup with Load

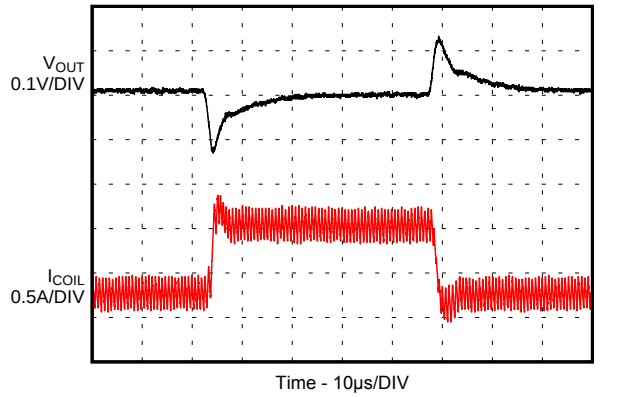

Load Step 0.3 A to 1 A, 1A/µs slew rate

Figure 18. Load Transient

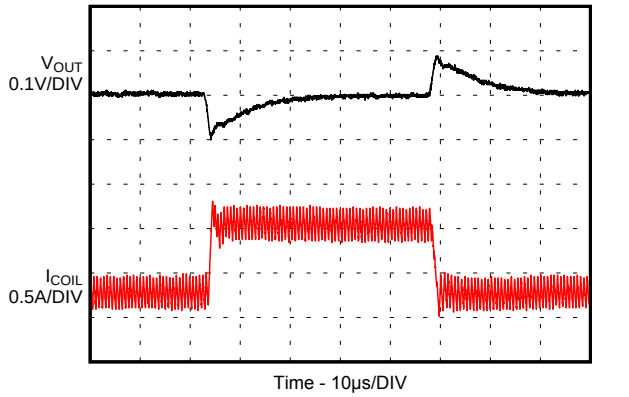

Load Step 0.3 A to 1 A, 1A/µs slew rate C3 = 6.8 pF

Figure 19. Load Transient with a feed forward capacitor

9 Power Supply Recommendations

The power supply to the TLV62568 must have a current rating according to the supply voltage, output voltage and output current.

Copyright © 2016–2017, Texas Instruments Incorporated

10 Layout

10.1 Layout Guidelines

The PCB layout is an important step to maintain the high performance of the TLV62568 device.

- The input/output capacitors and the inductor should be placed as close as possible to the IC. This keeps the power traces short. Routing these power traces direct and wide results in low trace resistance and low parasitic inductance.
- The low side of the input and output capacitors must be connected properly to the power GND to avoid a GND potential shift.
- The sense traces connected to FB are signal traces. Special care should be taken to avoid noise being induced. Keep these traces away from SW nodes.
- GND layers might be used for shielding.

10.2 Layout Example

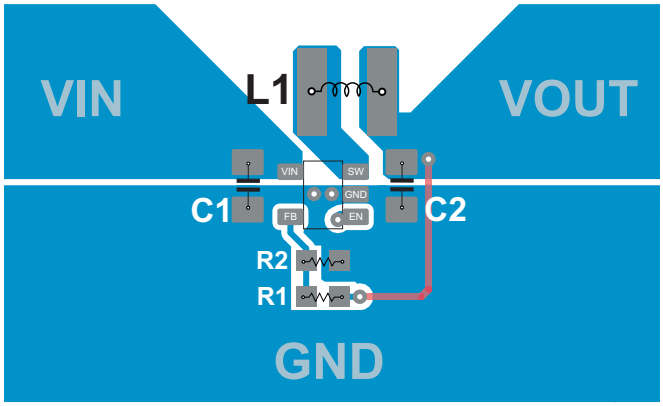

Figure 20. TLV62568DBV Layout

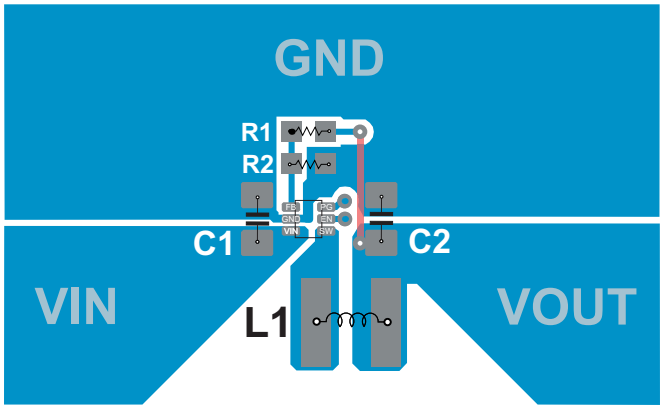

Figure 21. TLV62568PDRL Layout

10.3 Thermal Considerations

Implementation of integrated circuits in low-profile and fine-pitch surface-mount packages typically requires special attention to power dissipation. Many system-dependent issues such as thermal coupling, airflow, convection surfaces, and the presence of other heat-generating components affect the power dissipation limits of a given component.

Two basic approaches for enhancing thermal performance are listed below:

- Improving the power dissipation capability of the PCB design
- Introducing airflow in the system

For more details on how to use the thermal parameters, see the application notes: Thermal Characteristics Application Notes SZZA017 and SPRA953.

11 Device and Documentation Support

11.1 Device Support

11.1.1 Third-Party Products Disclaimer

TI'S PUBLICATION OF INFORMATION REGARDING THIRD-PARTY PRODUCTS OR SERVICES DOES NOT CONSTITUTE AN ENDORSEMENT REGARDING THE SUITABILITY OF SUCH PRODUCTS OR SERVICES OR A WARRANTY, REPRESENTATION OR ENDORSEMENT OF SUCH PRODUCTS OR SERVICES, EITHER ALONE OR IN COMBINATION WITH ANY TI PRODUCT OR SERVICE.

11.1.2 Custom Design With WEBENCH® Tools

Click here to create a custom design using the TLV62568 device with the WEBENCH® Power Designer.

1. Start by entering the input voltage (V_{IN}), output voltage (V_{OUT}), and output current (I_{OUT}) requirements.
2. Optimize the design for key parameters such as efficiency, footprint, and cost using the optimizer dial.
3. Compare the generated design with other possible solutions from Texas Instruments.

The WEBENCH Power Designer provides a customized schematic along with a list of materials with real-time pricing and component availability.

In most cases, these actions are available:

- Run electrical simulations to see important waveforms and circuit performance
- Run thermal simulations to understand board thermal performance
- Export customized schematic and layout into popular CAD formats
- Print PDF reports for the design, and share the design with colleagues

Get more information about WEBENCH tools at www.ti.com/WEBENCH.

11.2 Documentation Support

11.2.1 Related Documentation

Semiconductor and IC Package Thermal Metrics Application Report (SPRA953)

Thermal Characteristics of Linear and Logic Packages Using JEDEC PCB Designs Application Report (SZZA017)

11.3 Receiving Notification of Documentation Updates

To receive notification of documentation updates, navigate to the device product folder on ti.com. In the upper right corner, click on *Alert me* to register and receive a weekly digest of any product information that has changed. For change details, review the revision history included in any revised document.

11.4 Community Resources

The following links connect to TI community resources. Linked contents are provided "AS IS" by the respective contributors. They do not constitute TI specifications and do not necessarily reflect TI's views; see TI's Terms of Use.

TI E2E™ Online Community ***TI's Engineer-to-Engineer (E2E) Community.*** Created to foster collaboration among engineers. At e2e.ti.com, you can ask questions, share knowledge, explore ideas and help solve problems with fellow engineers.

Design Support ***TI's Design Support*** Quickly find helpful E2E forums along with design support tools and contact information for technical support.

11.5 Trademarks

E2E is a trademark of Texas Instruments.
WEBENCH is a registered trademark of Texas Instruments.
All other trademarks are the property of their respective owners.

Copyright © 2016–2017, Texas Instruments Incorporated

11.6 Electrostatic Discharge Caution

These devices have limited built-in ESD protection. The leads should be shorted together or the device placed in conductive foam during storage or handling to prevent electrostatic damage to the MOS gates.

11.7 Glossary

SLYZ022 — *TI Glossary*.

This glossary lists and explains terms, acronyms, and definitions.

12 Mechanical, Packaging, and Orderable Information

The following pages include mechanical, packaging, and orderable information. This information is the most current data available for the designated devices. This data is subject to change without notice and revision of this document. For browser-based versions of this data sheet, refer to the left-hand navigation.

PACKAGING INFORMATION

Orderable part number	Status (1)	Material type (2)	Package | Pins	Package qty | Carrier	RoHS (3)	Lead finish/ Ball material (4)	MSL rating/ Peak reflow (5)	Op temp (°C)	Part marking (6)
TLV62568DBVR	Active	Production	SOT-23 (DBV) | 5	3000 | LARGE T&R	Yes	NIPDAU | SN	Level-1-260C-UNLIM	-40 to 125	14VF
TLV62568DBVR.A	Active	Production	SOT-23 (DBV) | 5	3000 | LARGE T&R	Yes	NIPDAU	Level-1-260C-UNLIM	-40 to 125	14VF
TLV62568DBVT	Active	Production	SOT-23 (DBV) | 5	250 | SMALL T&R	Yes	NIPDAU | SN	Level-1-260C-UNLIM	-40 to 125	14VF
TLV62568DBVT.A	Active	Production	SOT-23 (DBV) | 5	250 | SMALL T&R	Yes	NIPDAU	Level-1-260C-UNLIM	-40 to 125	14VF
TLV62568DRLR	Active	Production	SOT-5X3 (DRL) | 6	3000 | LARGE T&R	Yes	Call TI | Sn	Level-1-260C-UNLIM	-40 to 125	18L
TLV62568DRLR.A	Active	Production	SOT-5X3 (DRL) | 6	3000 | LARGE T&R	Yes	SN	Level-1-260C-UNLIM	-40 to 125	18L
TLV62568DRLT	Active	Production	SOT-5X3 (DRL) | 6	250 | SMALL T&R	Yes	Call TI | Sn	Level-1-260C-UNLIM	-40 to 125	18L
TLV62568DRLT.A	Active	Production	SOT-5X3 (DRL) | 6	250 | SMALL T&R	Yes	SN	Level-1-260C-UNLIM	-40 to 125	18L
TLV62568PDDCR	Active	Production	SOT-23-THIN (DDC) | 6	3000 | LARGE T&R	Yes	Call TI | Sn	Level-1-260C-UNLIM	-40 to 125	(9X9, 9XW)
TLV62568PDDCR.A	Active	Production	SOT-23-THIN (DDC) | 6	3000 | LARGE T&R	Yes	SN	Level-1-260C-UNLIM	-40 to 125	(9X9, 9XW)
TLV62568PDDCT	Active	Production	SOT-23-THIN (DDC) | 6	250 | SMALL T&R	Yes	Call TI | Sn	Level-1-260C-UNLIM	-40 to 125	(9X9, 9XW)
TLV62568PDDCT.A	Active	Production	SOT-23-THIN (DDC) | 6	250 | SMALL T&R	Yes	SN	Level-1-260C-UNLIM	-40 to 125	(9X9, 9XW)
TLV62568PDRLR	Active	Production	SOT-5X3 (DRL) | 6	3000 | LARGE T&R	Yes	Call TI | Sn	Level-1-260C-UNLIM	-40 to 125	18N
TLV62568PDRLR.A	Active	Production	SOT-5X3 (DRL) | 6	3000 | LARGE T&R	Yes	SN	Level-1-260C-UNLIM	-40 to 125	18N
TLV62568PDRLT	Active	Production	SOT-5X3 (DRL) | 6	250 | SMALL T&R	Yes	Call TI | Sn	Level-1-260C-UNLIM	-40 to 125	18N
TLV62568PDRLT.A	Active	Production	SOT-5X3 (DRL) | 6	250 | SMALL T&R	Yes	SN	Level-1-260C-UNLIM	-40 to 125	18N

(1) **Status:** For more details on status, see our product life cycle.

(2) **Material type:** When designated, preproduction parts are prototypes/experimental devices, and are not yet approved or released for full production. Testing and final process, including without limitation quality assurance, reliability performance testing, and/or process qualification, may not yet be complete, and this item is subject to further changes or possible discontinuation. If available for ordering, purchases will be subject to an additional waiver at checkout, and are intended for early internal evaluation purposes only. These items are sold without warranties of any kind.

(3) **RoHS values:** Yes, No, RoHS Exempt. See the TI RoHS Statement for additional information and value definition.

(4) **Lead finish/Ball material:** Parts may have multiple material finish options. Finish options are separated by a vertical ruled line. Lead finish/Ball material values may wrap to two lines if the finish value exceeds the maximum column width.

(5) **MSL rating/Peak reflow:** The moisture sensitivity level ratings and peak solder (reflow) temperatures. In the event that a part has multiple moisture sensitivity ratings, only the lowest level per JEDEC standards is shown. Refer to the shipping label for the actual reflow temperature that will be used to mount the part to the printed circuit board.

(6) **Part marking:** There may be an additional marking, which relates to the logo, the lot trace code information, or the environmental category of the part.

Multiple part markings will be inside parentheses. Only one part marking contained in parentheses and separated by a "~" will appear on a part. If a line is indented then it is a continuation of the previous line and the two combined represent the entire part marking for that device.

Important Information and Disclaimer: The information provided on this page represents TI's knowledge and belief as of the date that it is provided. TI bases its knowledge and belief on information provided by third parties, and makes no representation or warranty as to the accuracy of such information. Efforts are underway to better integrate information from third parties. TI has taken and continues to take reasonable steps to provide representative and accurate information but may not have conducted destructive testing or chemical analysis on incoming materials and chemicals. TI and TI suppliers consider certain information to be proprietary, and thus CAS numbers and other limited information may not be available for release.

In no event shall TI's liability arising out of such information exceed the total purchase price of the TI part(s) at issue in this document sold by TI to Customer on an annual basis.

TAPE AND REEL INFORMATION

REEL DIMENSIONS

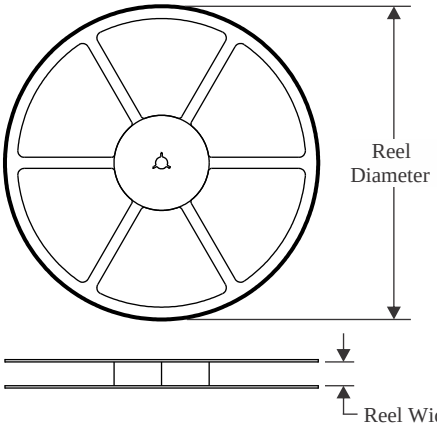

TAPE DIMENSIONS

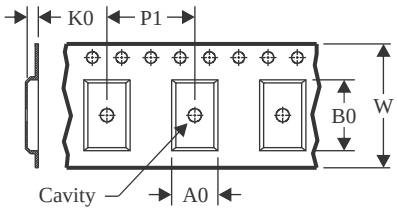

A0	Dimension designed to accommodate the component width
B0	Dimension designed to accommodate the component length
K0	Dimension designed to accommodate the component thickness
W	Overall width of the carrier tape
P1	Pitch between successive cavity centers

QUADRANT ASSIGNMENTS FOR PIN 1 ORIENTATION IN TAPE

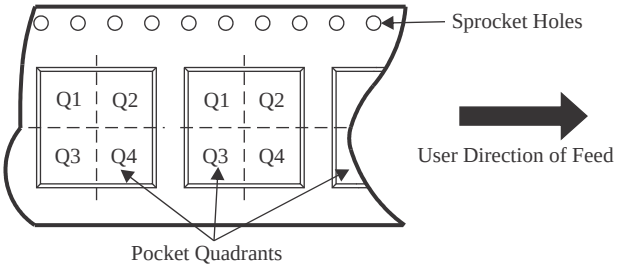

*All dimensions are nominal

Device	Package Type	Package Drawing	Pins	SPQ	Reel Diameter (mm)	Reel Width W1 (mm)	A0 (mm)	B0 (mm)	K0 (mm)	P1 (mm)	W (mm)	Pin1 Quadrant
TLV62568DBVR	SOT-23	DBV	5	3000	178.0	8.4	3.2	3.2	1.4	4.0	8.0	Q3
TLV62568DBVT	SOT-23	DBV	5	250	180.0	8.4	3.2	3.2	1.4	4.0	8.0	Q3
TLV62568DRLR	SOT-5X3	DRL	6	3000	180.0	8.4	1.8	1.8	0.75	4.0	8.0	Q3
TLV62568DRLR	SOT-5X3	DRL	6	3000	180.0	8.4	2.0	1.8	0.75	4.0	8.0	Q3
TLV62568DRLT	SOT-5X3	DRL	6	250	180.0	8.4	1.8	1.8	0.75	4.0	8.0	Q3
TLV62568DRLT	SOT-5X3	DRL	6	250	180.0	8.4	2.0	1.8	0.75	4.0	8.0	Q3
TLV62568PDDCR	SOT-23-THIN	DDC	6	3000	180.0	8.4	3.2	3.2	1.4	4.0	8.0	Q3
TLV62568PDDCT	SOT-23-THIN	DDC	6	250	180.0	8.4	3.2	3.2	1.4	4.0	8.0	Q3
TLV62568PDRLR	SOT-5X3	DRL	6	3000	180.0	8.4	2.0	1.8	0.75	4.0	8.0	Q3
TLV62568PDRLR	SOT-5X3	DRL	6	3000	180.0	8.4	1.8	1.8	0.75	4.0	8.0	Q3
TLV62568PDRLT	SOT-5X3	DRL	6	250	180.0	8.4	2.0	1.8	0.75	4.0	8.0	Q3
TLV62568PDRLT	SOT-5X3	DRL	6	250	180.0	8.4	1.8	1.8	0.75	4.0	8.0	Q3

TAPE AND REEL BOX DIMENSIONS

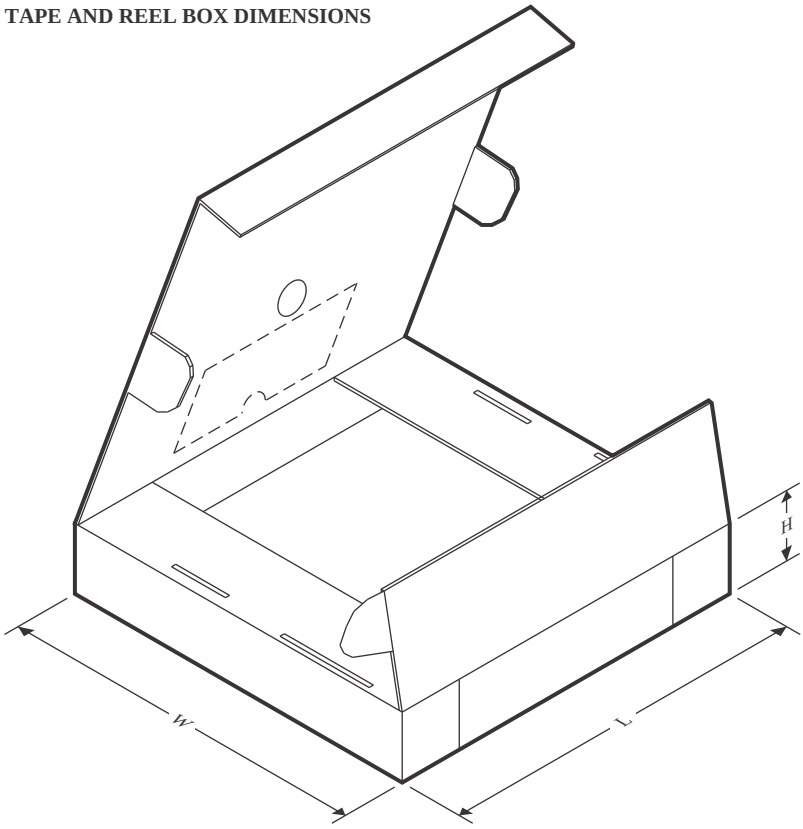

*All dimensions are nominal

Device	Package Type	Package Drawing	Pins	SPQ	Length (mm)	Width (mm)	Height (mm)
TLV62568DBVR	SOT-23	DBV	5	3000	208.0	191.0	35.0
TLV62568DBVT	SOT-23	DBV	5	250	210.0	185.0	35.0
TLV62568DRLR	SOT-5X3	DRL	6	3000	210.0	185.0	35.0
TLV62568DRLR	SOT-5X3	DRL	6	3000	210.0	185.0	35.0
TLV62568DRLT	SOT-5X3	DRL	6	250	210.0	185.0	35.0
TLV62568DRLT	SOT-5X3	DRL	6	250	210.0	185.0	35.0
TLV62568PDDCR	SOT-23-THIN	DDC	6	3000	210.0	185.0	35.0
TLV62568PDDCT	SOT-23-THIN	DDC	6	250	210.0	185.0	35.0
TLV62568PDRLR	SOT-5X3	DRL	6	3000	210.0	185.0	35.0
TLV62568PDRLR	SOT-5X3	DRL	6	3000	210.0	185.0	35.0
TLV62568PDRLT	SOT-5X3	DRL	6	250	210.0	185.0	35.0
TLV62568PDRLT	SOT-5X3	DRL	6	250	210.0	185.0	35.0

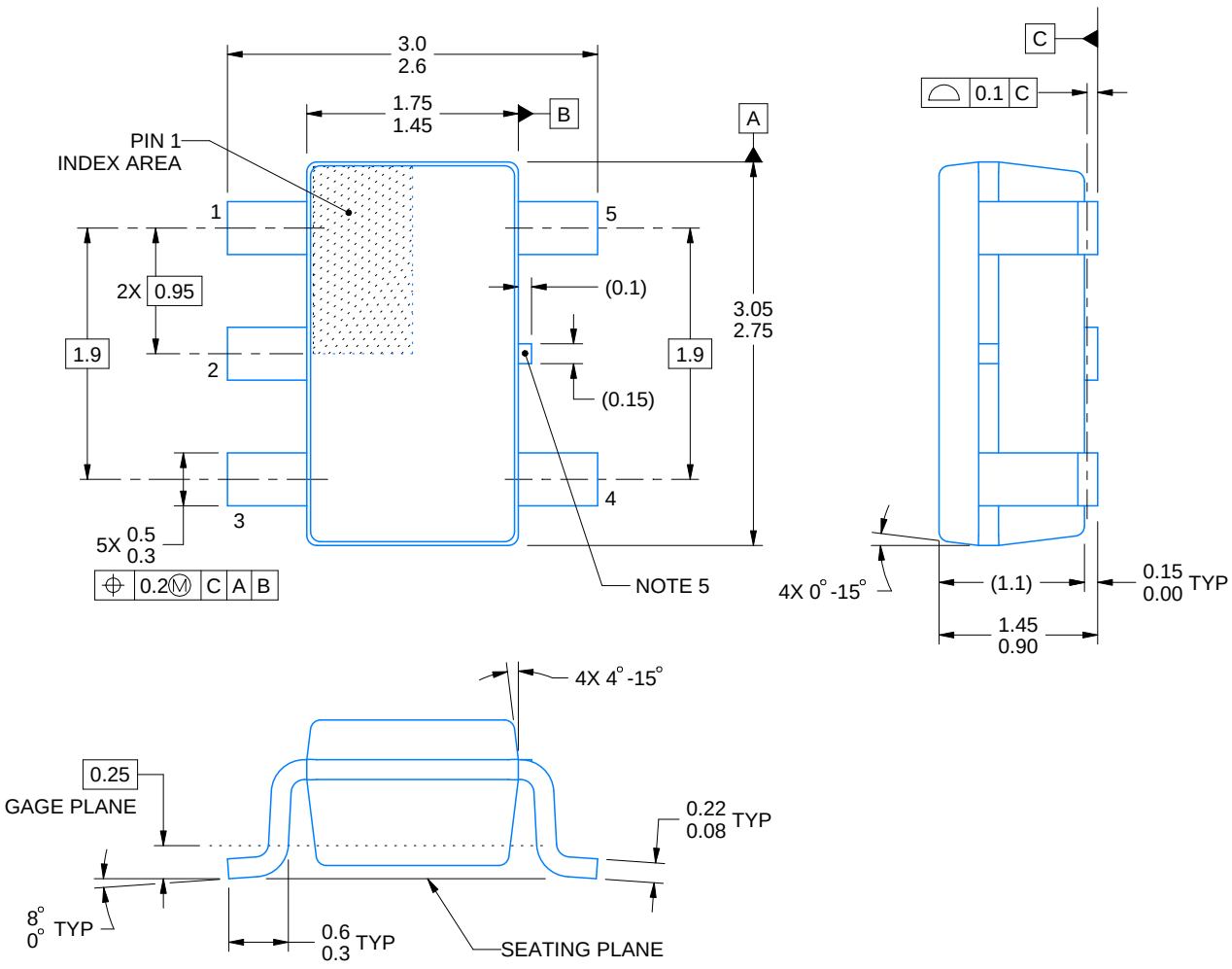

4214839/K 08/2024

NOTES:

1. All linear dimensions are in millimeters. Any dimensions in parenthesis are for reference only. Dimensioning and tolerancing per ASME Y14.5M.
2. This drawing is subject to change without notice.
3. Refernce JEDEC MO-178.
4. Body dimensions do not include mold flash, protrusions, or gate burrs. Mold flash, protrusions, or gate burrs shall not exceed 0.25 mm per side.
5. Support pin may differ or may not be present.

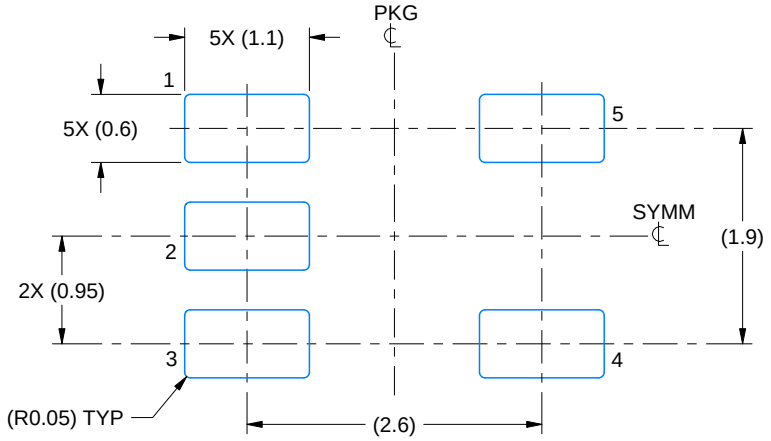

LAND PATTERN EXAMPLE
EXPOSED METAL SHOWN
SCALE:15X

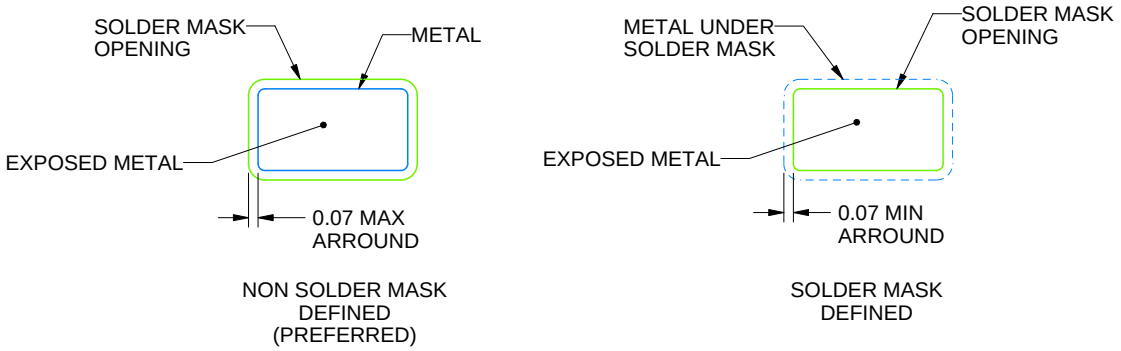

SOLDER MASK DETAILS

4214839/K 08/2024

NOTES: (continued)

6. Publication IPC-7351 may have alternate designs.
7. Solder mask tolerances between and around signal pads can vary based on board fabrication site.

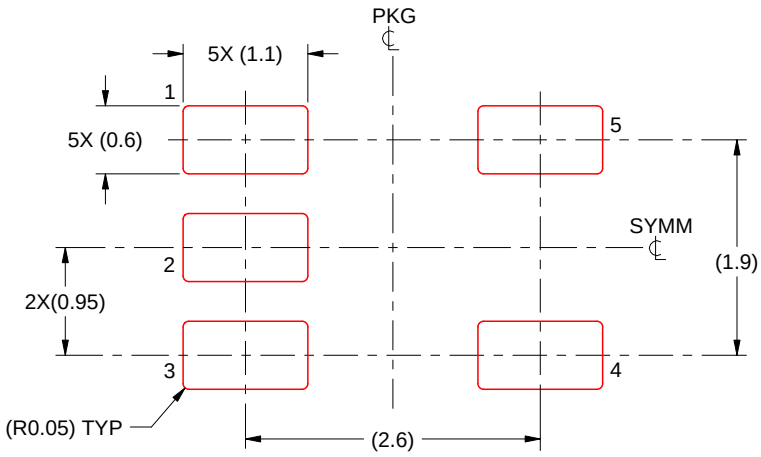

SOLDER PASTE EXAMPLE
BASED ON 0.125 mm THICK STENCIL
SCALE:15X

4214839/K 08/2024

NOTES: (continued)

8. Laser cutting apertures with trapezoidal walls and rounded corners may offer better paste release. IPC-7525 may have alternate design recommendations.
9. Board assembly site may have different recommendations for stencil design.

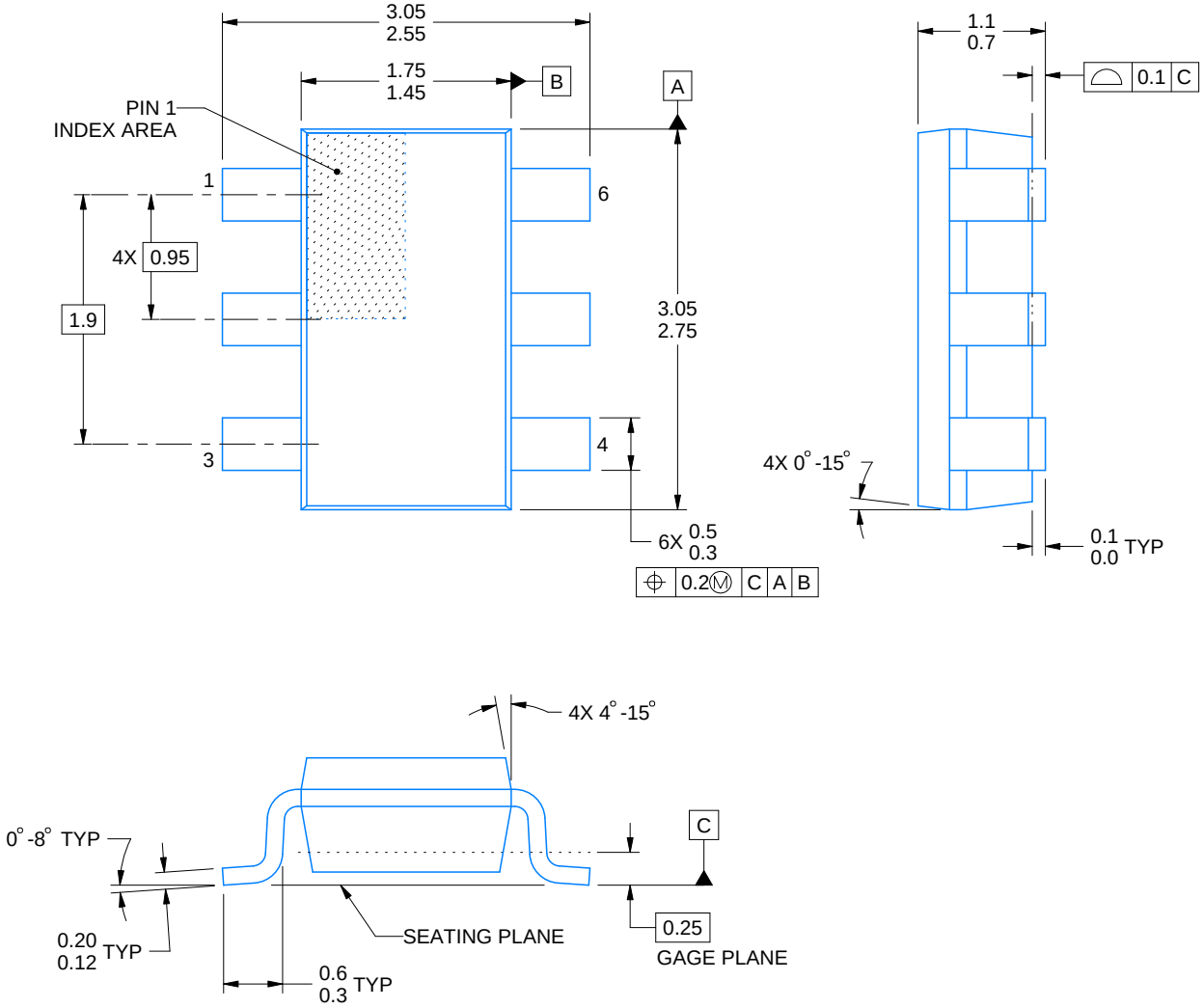

4214841/E 08/2024

NOTES:

1. All linear dimensions are in millimeters. Any dimensions in parenthesis are for reference only. Dimensioning and tolerancing per ASME Y14.5M.
2. This drawing is subject to change without notice.
3. Reference JEDEC MO-193.

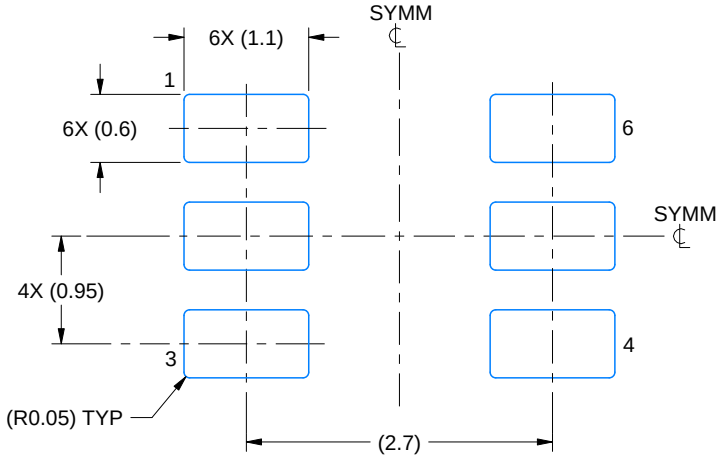

LAND PATTERN EXAMPLE
EXPLOSED METAL SHOWN
SCALE:15X

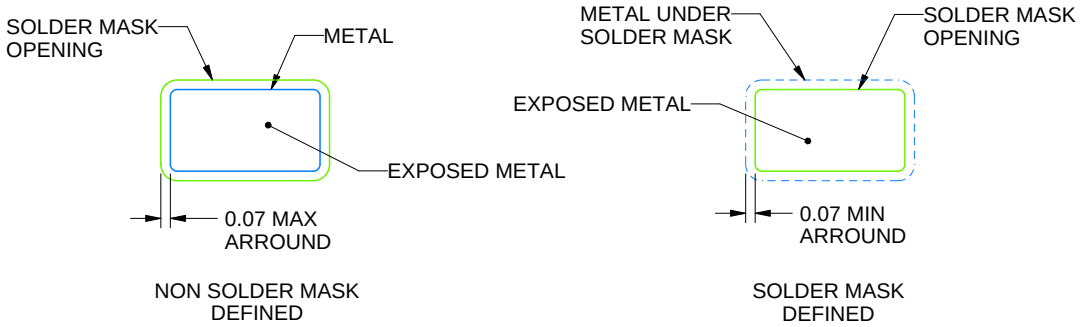

SOLDERMASK DETAILS

4214841/E 08/2024

NOTES: (continued)

4. Publication IPC-7351 may have alternate designs.
5. Solder mask tolerances between and around signal pads can vary based on board fabrication site.

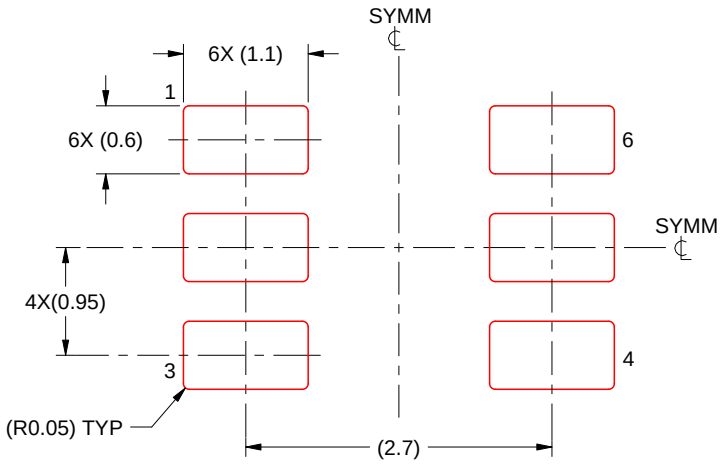

SOLDER PASTE EXAMPLE
BASED ON 0.125 THICK STENCIL
SCALE:15X

4214841/E 08/2024

NOTES: (continued)

6. Laser cutting apertures with trapezoidal walls and rounded corners may offer better paste release. IPC-7525 may have alternate design recommendations.
7. Board assembly site may have different recommendations for stencil design.

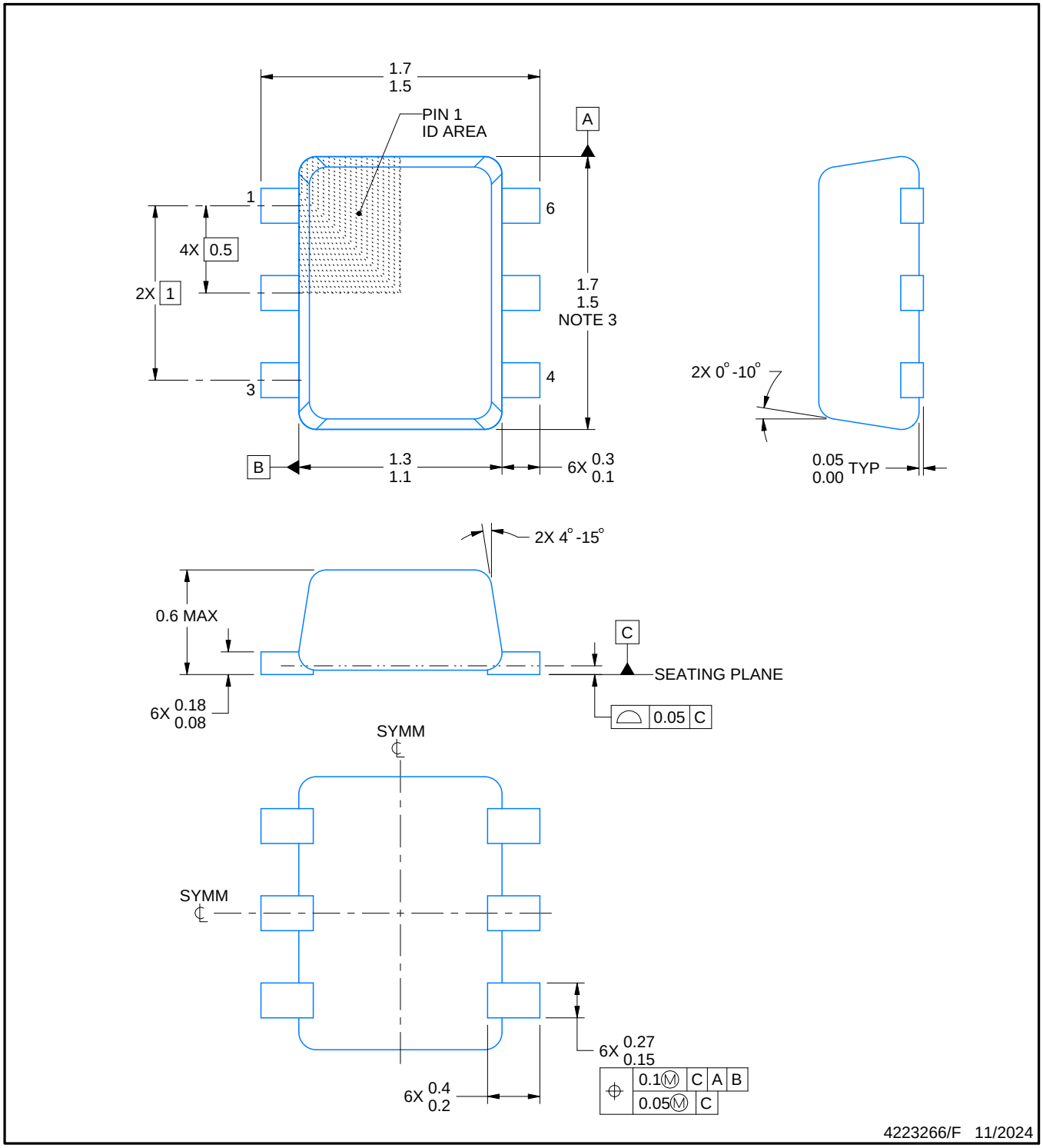

NOTES:

1. All linear dimensions are in millimeters. Any dimensions in parenthesis are for reference only. Dimensioning and tolerancing per ASME Y14.5M.
2. This drawing is subject to change without notice.
3. This dimension does not include mold flash, protrusions, or gate burrs. Mold flash, protrusions, or gate burrs shall not exceed 0.15 mm per side.
4. Reference JEDEC registration MO-293 Variation UAAD

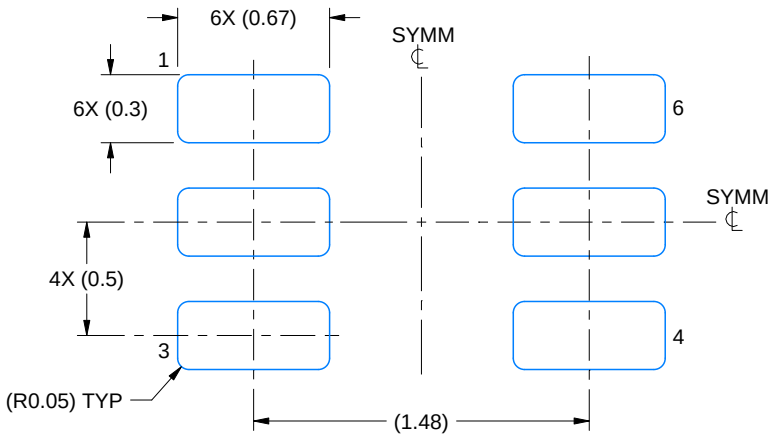

LAND PATTERN EXAMPLE
SCALE:30X

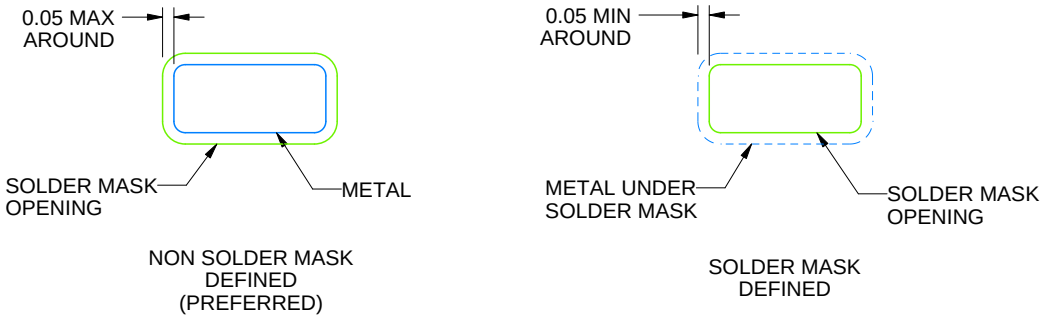

SOLDERMASK DETAILS

4223266/F 11/2024

NOTES: (continued)

5. Publication IPC-7351 may have alternate designs.
6. Solder mask tolerances between and around signal pads can vary based on board fabrication site.
7. Land pattern design aligns to IPC-610, Bottom Termination Component (BTC) solder joint inspection criteria.

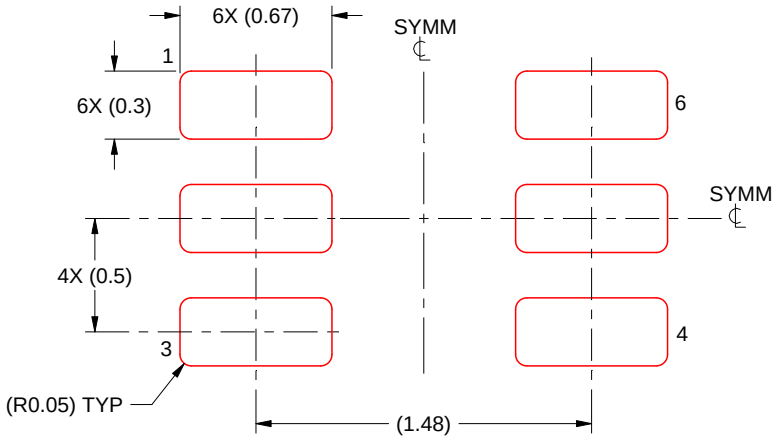

SOLDER PASTE EXAMPLE
BASED ON 0.1 mm THICK STENCIL
SCALE:30X

4223266/F 11/2024

NOTES: (continued)

8. Laser cutting apertures with trapezoidal walls and rounded corners may offer better paste release. IPC-7525 may have alternate design recommendations.
9. Board assembly site may have different recommendations for stencil design.

IMPORTANT NOTICE AND DISCLAIMER

TI PROVIDES TECHNICAL AND RELIABILITY DATA (INCLUDING DATASHEETS), DESIGN RESOURCES (INCLUDING REFERENCE DESIGNS), APPLICATION OR OTHER DESIGN ADVICE, WEB TOOLS, SAFETY INFORMATION, AND OTHER RESOURCES “AS IS” AND WITH ALL FAULTS, AND DISCLAIMS ALL WARRANTIES, EXPRESS AND IMPLIED, INCLUDING WITHOUT LIMITATION ANY IMPLIED WARRANTIES OF MERCHANTABILITY, FITNESS FOR A PARTICULAR PURPOSE OR NON-INFRINGEMENT OF THIRD PARTY INTELLECTUAL PROPERTY RIGHTS.

These resources are intended for skilled developers designing with TI products. You are solely responsible for (1) selecting the appropriate TI products for your application, (2) designing, validating and testing your application, and (3) ensuring your application meets applicable standards, and any other safety, security, regulatory or other requirements.

These resources are subject to change without notice. TI grants you permission to use these resources only for development of an application that uses the TI products described in the resource. Other reproduction and display of these resources is prohibited. No license is granted to any other TI intellectual property right or to any third party intellectual property right. TI disclaims responsibility for, and you fully indemnify TI and its representatives against any claims, damages, costs, losses, and liabilities arising out of your use of these resources.

TI’s products are provided subject to TI’s Terms of Sale, TI’s General Quality Guidelines, or other applicable terms available either on ti.com or provided in conjunction with such TI products. TI’s provision of these resources does not expand or otherwise alter TI’s applicable warranties or warranty disclaimers for TI products. Unless TI explicitly designates a product as custom or customer-specified, TI products are standard, catalog, general purpose devices.

TI objects to and rejects any additional or different terms you may propose.

Copyright © 2025, Texas Instruments Incorporated

Last updated 10/2025