AMC8Vx08 8-Channel, 16-Bit Analog Controllers With Current-Output DACs and Mux Output

1 Features

- Six 16-bit current output DACs (IDACs)
  - Programmable full-scale output ranges: 250mA, 150mA, 75mA
  - IDAC1 current sink option: –60mA
- Two 16-bit current output DACs optimized for high current generation (IDAC+)
  - IDAC internal mode with programmable full-scale ranges: 250mA, 150mA, 75mA
  - IDAC+ mode with external FET option for high current generation.
- MUXOUT pin to monitor internal voltage and current using external ADC
- Internal 2.5V reference
  - AMC8V208: 25ppm/°C
  - AMC8V108: 100ppm/°C
- Thermal shutdown at 150°C
- Selectable SPI and I^2C interfaces: 1.1V to 1.95V operation
- Operating junction temperature: –40°C to +125°C

2 Applications

- Optical module

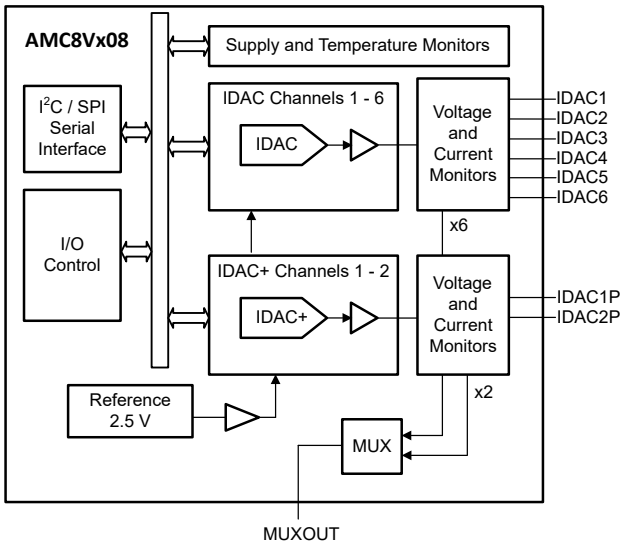

Simplified Schematic

3 Description

The AMC8V108 and AMC8V208 (AMC8Vx08) are highly integrated current-output controllers optimized for optical networking applications.

The AMC8Vx08 include six dedicated 16-bit current-output digital-to-analog converters (IDACs), and two 16-bit IDACs that can be configured to control high-output current generation circuits (IDAC+). The AMC8Vx08 also include a MUXOUT pin for monitoring the voltage and current on the current-output pins. An integrated high-precision internal reference eliminates the need for an external reference in most applications.

The IDAC outputs support full-scale output ranges of 250mA, 150mA, and 75mA, as well as an output range of –60mA (sink mode) supported on IDAC1 only. The IDAC+ outputs in internal current-output mode also support full-scale output ranges of 250mA, 150mA, and 75mA. Additionally, the IDAC+ outputs can be configured to operate with an external FET and sense resistor to simplify the design of very high-current outputs.

The IDAC and IDAC+ outputs operate from independent power supplies with a 275mV minimum headroom for power-dissipation optimization.

Package Information

PART NUMBER	PACKAGE(1)	PACKAGE SIZE(2)
AMC8V108	YBF (DSBGA, 60)	3.272mm × 3.272mm
AMC8V208		

(1) For more information, see Section 6.
(2) The package size (length × width) is a nominal value and includes pins, where applicable.

An IMPORTANT NOTICE at the end of this data sheet addresses availability, warranty, changes, use in safety-critical applications, intellectual property matters and other important disclaimers. PRODUCTION DATA.

4 Device and Documentation Support

4.1 Documentation Support

Note

TI is transitioning to use more inclusive terminology. Some language can be different than what is expected for certain technology areas.

4.2 Receiving Notification of Documentation Updates

To receive notification of documentation updates, navigate to the device product folder on ti.com. Click on *Notifications* to register and receive a weekly digest of any product information that has changed. For change details, review the revision history included in any revised document.

4.3 Support Resources

TI E2E™ support forums are an engineer's go-to source for fast, verified answers and design help — straight from the experts. Search existing answers or ask your own question to get the quick design help you need.

Linked content is provided "AS IS" by the respective contributors. They do not constitute TI specifications and do not necessarily reflect TI's views; see TI's Terms of Use.

4.4 Trademarks

TI E2E™ is a trademark of Texas Instruments.
All trademarks are the property of their respective owners.

4.5 Electrostatic Discharge Caution



This integrated circuit can be damaged by ESD. Texas Instruments recommends that all integrated circuits be handled with appropriate precautions. Failure to observe proper handling and installation procedures can cause damage.

ESD damage can range from subtle performance degradation to complete device failure. Precision integrated circuits may be more susceptible to damage because very small parametric changes could cause the device not to meet its published specifications.

4.6 Glossary

TI Glossary	This glossary lists and explains terms, acronyms, and definitions.

5 Revision History

NOTE: Page numbers for previous revisions may differ from page numbers in the current version.

DATE	REVISION	NOTES
September 2024	*	Initial Release

6 Mechanical, Packaging, and Orderable Information

The following pages include mechanical, packaging, and orderable information. This information is the most current data available for the designated devices. This data is subject to change without notice and revision of this document. For browser-based versions of this data sheet, refer to the left-hand navigation.

Copyright © 2024 Texas Instruments Incorporated

PACKAGING INFORMATION

Orderable part number	Status (1)	Material type (2)	Package | Pins	Package qty | Carrier	RoHS (3)	Lead finish/ Ball material (4)	MSL rating/ Peak reflow (5)	Op temp (°C)	Part marking (6)
AMC8V108YBFR	Active	Production	DSBGA (YBF) | 60	6000 | LARGE T&R	Yes	SNAGCU	Level-1-260C-UNLIM	-	AMC8V108
AMC8V108YBFR.A	Active	Production	DSBGA (YBF) | 60	6000 | LARGE T&R	Yes	SNAGCU	Level-1-260C-UNLIM	See AMC8V108YBFR	AMC8V108
AMC8V208YBFR	Active	Production	DSBGA (YBF) | 60	6000 | LARGE T&R	Yes	SNAGCU	Level-1-260C-UNLIM	-40 to 125	AMC8V208
AMC8V208YBFR.A	Active	Production	DSBGA (YBF) | 60	6000 | LARGE T&R	Yes	SNAGCU	Level-1-260C-UNLIM	See AMC8V208YBFR	AMC8V208

(1) **Status:** For more details on status, see our product life cycle.

(2) **Material type:** When designated, preproduction parts are prototypes/experimental devices, and are not yet approved or released for full production. Testing and final process, including without limitation quality assurance, reliability performance testing, and/or process qualification, may not yet be complete, and this item is subject to further changes or possible discontinuation. If available for ordering, purchases will be subject to an additional waiver at checkout, and are intended for early internal evaluation purposes only. These items are sold without warranties of any kind.

(3) **RoHS values:** Yes, No, RoHS Exempt. See the TI RoHS Statement for additional information and value definition.

(4) **Lead finish/Ball material:** Parts may have multiple material finish options. Finish options are separated by a vertical ruled line. Lead finish/Ball material values may wrap to two lines if the finish value exceeds the maximum column width.

(5) **MSL rating/Peak reflow:** The moisture sensitivity level ratings and peak solder (reflow) temperatures. In the event that a part has multiple moisture sensitivity ratings, only the lowest level per JEDEC standards is shown. Refer to the shipping label for the actual reflow temperature that will be used to mount the part to the printed circuit board.

(6) **Part marking:** There may be an additional marking, which relates to the logo, the lot trace code information, or the environmental category of the part.

Multiple part markings will be inside parentheses. Only one part marking contained in parentheses and separated by a "~" will appear on a part. If a line is indented then it is a continuation of the previous line and the two combined represent the entire part marking for that device.

Important Information and Disclaimer: The information provided on this page represents TI's knowledge and belief as of the date that it is provided. TI bases its knowledge and belief on information provided by third parties, and makes no representation or warranty as to the accuracy of such information. Efforts are underway to better integrate information from third parties. TI has taken and continues to take reasonable steps to provide representative and accurate information but may not have conducted destructive testing or chemical analysis on incoming materials and chemicals. TI and TI suppliers consider certain information to be proprietary, and thus CAS numbers and other limited information may not be available for release.

In no event shall TI's liability arising out of such information exceed the total purchase price of the TI part(s) at issue in this document sold by TI to Customer on an annual basis.

TAPE AND REEL INFORMATION

REEL DIMENSIONS

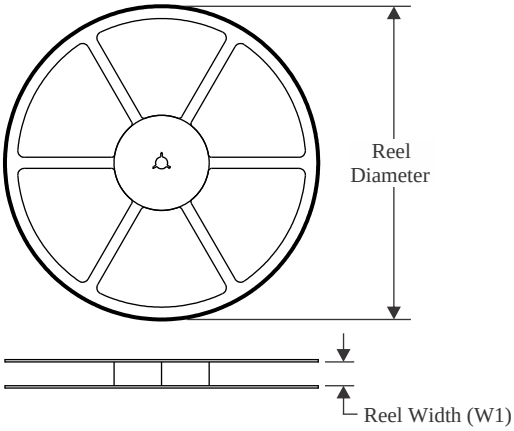

TAPE DIMENSIONS

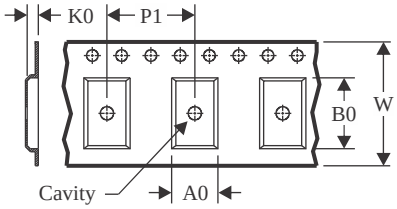

A0	Dimension designed to accommodate the component width
B0	Dimension designed to accommodate the component length
K0	Dimension designed to accommodate the component thickness
W	Overall width of the carrier tape
P1	Pitch between successive cavity centers

QUADRANT ASSIGNMENTS FOR PIN 1 ORIENTATION IN TAPE

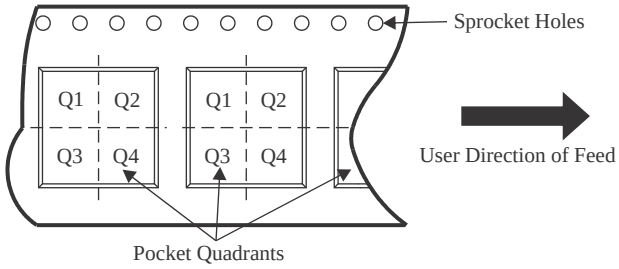

*All dimensions are nominal

Device	Package Type	Package Drawing	Pins	SPQ	Reel Diameter (mm)	Reel Width W1 (mm)	A0 (mm)	B0 (mm)	K0 (mm)	P1 (mm)	W (mm)	Pin1 Quadrant
AMC8V108YBFR	DSBGA	YBF	60	6000	330.0	12.4	3.48	3.48	0.7	8.0	12.0	Q1
AMC8V208YBFR	DSBGA	YBF	60	6000	330.0	12.4	3.48	3.48	0.7	8.0	12.0	Q1

TAPE AND REEL BOX DIMENSIONS

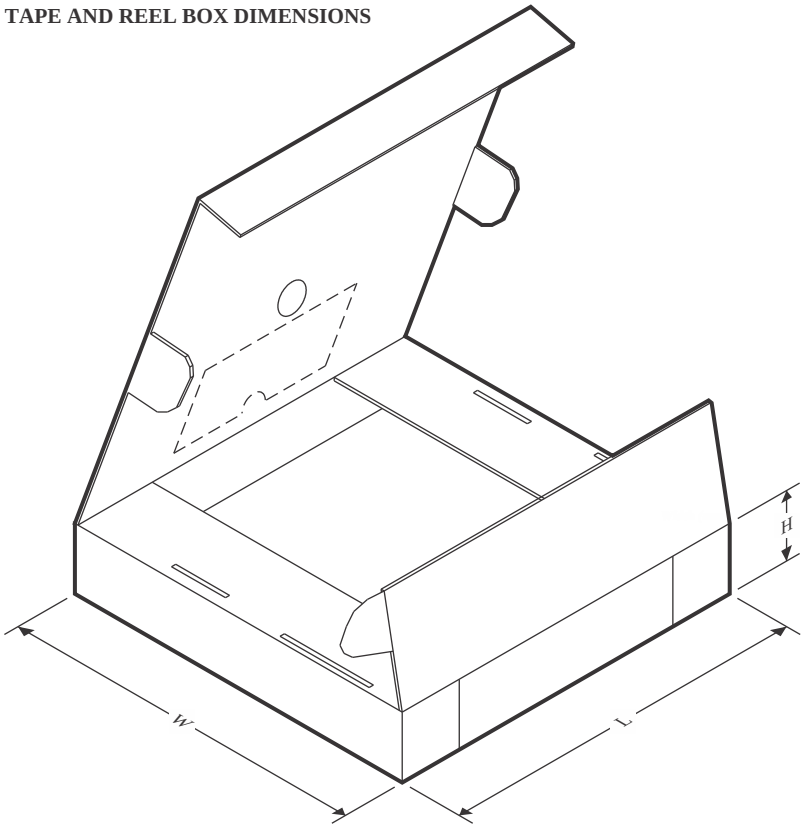

*All dimensions are nominal

Device	Package Type	Package Drawing	Pins	SPQ	Length (mm)	Width (mm)	Height (mm)
AMC8V108YBFR	DSBGA	YBF	60	6000	367.0	367.0	35.0
AMC8V208YBFR	DSBGA	YBF	60	6000	367.0	367.0	35.0

YBF0060

PACKAGE OUTLINE

DSBGA - 0.55 mm max height

DIE SIZE BALL GRID ARRAY

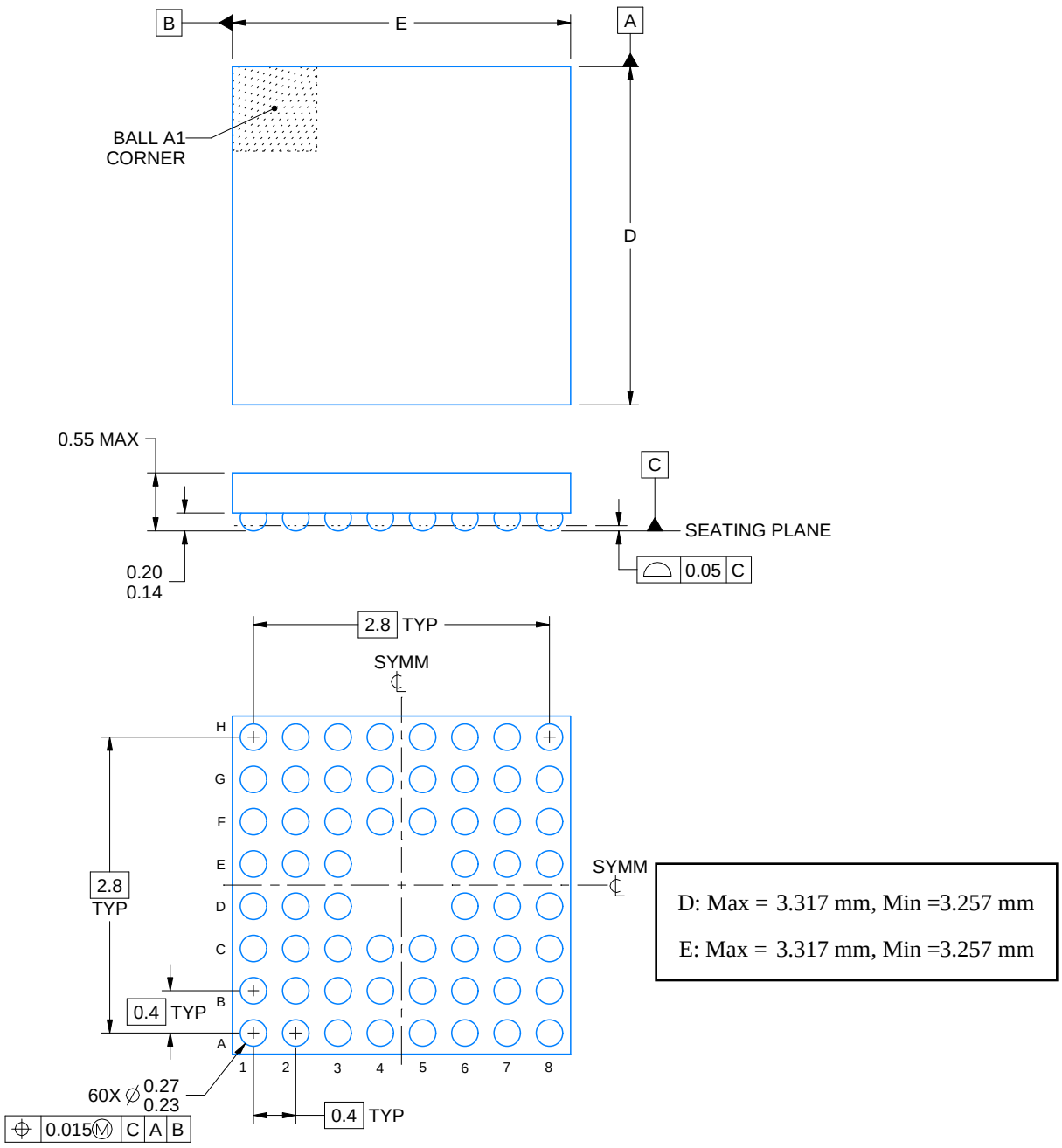

NOTES:

1. All linear dimensions are in millimeters. Any dimensions in parenthesis are for reference only. Dimensioning and tolerancing per ASME Y14.5M.
2. This drawing is subject to change without notice.

EXAMPLE BOARD LAYOUT

YBF0060

DSBGA - 0.55 mm max height

DIE SIZE BALL GRID ARRAY

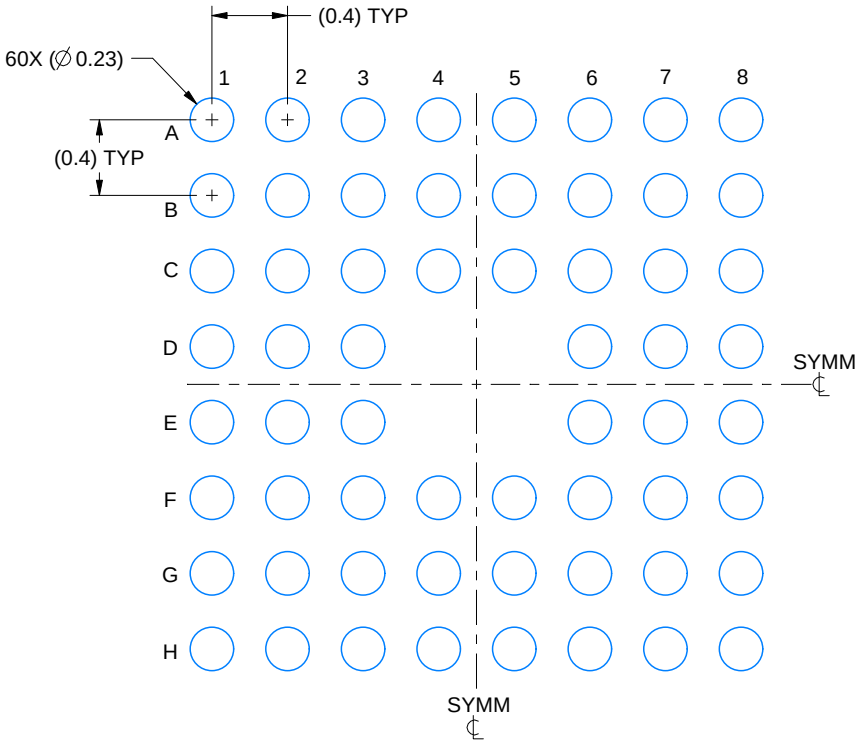

LAND PATTERN EXAMPLE
EXPOSED METAL SHOWN
SCALE: 25X

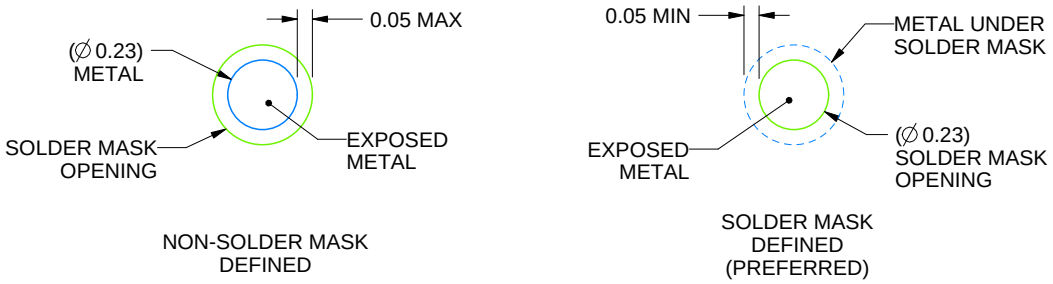

SOLDER MASK DETAILS
NOT TO SCALE

4226966/A 07/2021

NOTES: (continued)

3. Final dimensions may vary due to manufacturing tolerance considerations and also routing constraints.
   See Texas Instruments Literature No. SNVA009 (www.ti.com/lit/snva009).

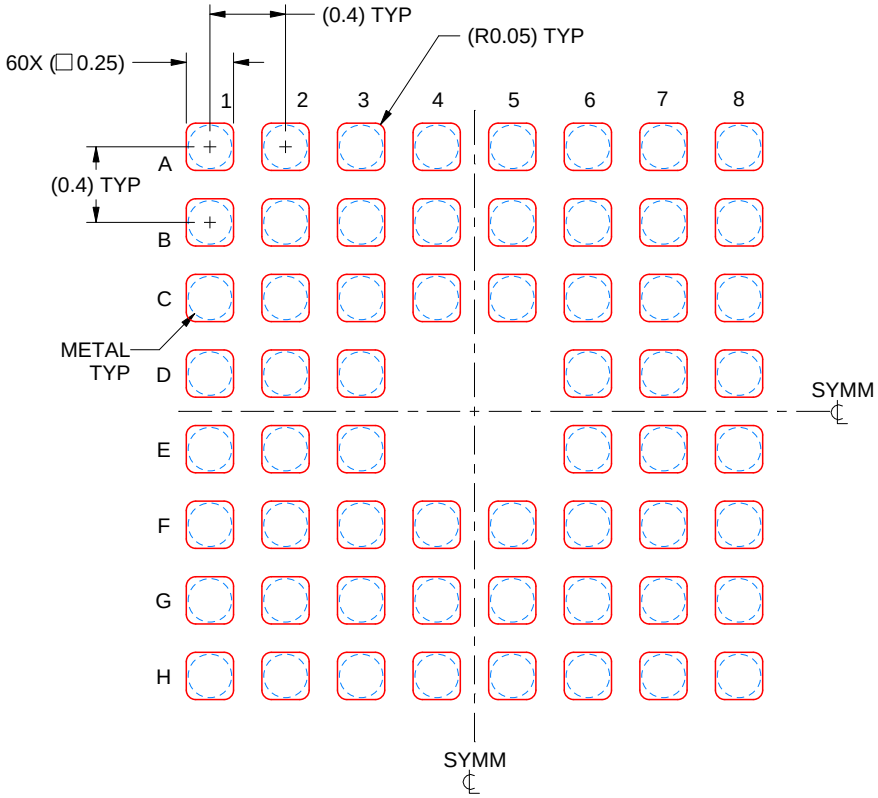

SOLDER PASTE EXAMPLE
BASED ON 0.1 mm THICK STENCIL
SCALE: 25X

4226966/A 07/2021

NOTES: (continued)

4. Laser cutting apertures with trapezoidal walls and rounded corners may offer better paste release.

IMPORTANT NOTICE AND DISCLAIMER

TI PROVIDES TECHNICAL AND RELIABILITY DATA (INCLUDING DATASHEETS), DESIGN RESOURCES (INCLUDING REFERENCE DESIGNS), APPLICATION OR OTHER DESIGN ADVICE, WEB TOOLS, SAFETY INFORMATION, AND OTHER RESOURCES “AS IS” AND WITH ALL FAULTS, AND DISCLAIMS ALL WARRANTIES, EXPRESS AND IMPLIED, INCLUDING WITHOUT LIMITATION ANY IMPLIED WARRANTIES OF MERCHANTABILITY, FITNESS FOR A PARTICULAR PURPOSE OR NON-INFRINGEMENT OF THIRD PARTY INTELLECTUAL PROPERTY RIGHTS.

These resources are intended for skilled developers designing with TI products. You are solely responsible for (1) selecting the appropriate TI products for your application, (2) designing, validating and testing your application, and (3) ensuring your application meets applicable standards, and any other safety, security, regulatory or other requirements.

These resources are subject to change without notice. TI grants you permission to use these resources only for development of an application that uses the TI products described in the resource. Other reproduction and display of these resources is prohibited. No license is granted to any other TI intellectual property right or to any third party intellectual property right. TI disclaims responsibility for, and you fully indemnify TI and its representatives against any claims, damages, costs, losses, and liabilities arising out of your use of these resources.

TI’s products are provided subject to TI’s Terms of Sale, TI’s General Quality Guidelines, or other applicable terms available either on ti.com or provided in conjunction with such TI products. TI’s provision of these resources does not expand or otherwise alter TI’s applicable warranties or warranty disclaimers for TI products. Unless TI explicitly designates a product as custom or customer-specified, TI products are standard, catalog, general purpose devices.

TI objects to and rejects any additional or different terms you may propose.

Copyright © 2026, Texas Instruments Incorporated

Last updated 10/2025