bq2204A

X4 SRAM Nonvolatile Controller Unit

Features

- Power monitoring and switching for 3-volt battery-backup applications
- Write-protect control
- 2-input decoder for control of up to 4 banks of SRAM
- 3-volt primary cell inputs
- Less than 10ns chip-enable propagation delay
- 5% or 10% supply operation

General Description

The CMOS bq2204A SRAM Nonvolatile Controller Unit provides all necessary functions for converting up to four banks of standard CMOS SRAM into nonvolatile read/write memory.

A precision comparator monitors the 5V V_{CC} input for an out-of-tolerance condition. When out-of-tolerance is detected, the four conditioned chip-enable outputs are forced inactive to write-protect up to four banks of SRAM.

During a power failure, the external SRAMs are switched from the V_{CC} supply to one of two 3V backup supplies. On a subsequent power-up, the SRAMs are write-protected until a power-valid condition exists.

During power-valid operation, a two-input decoder transparently selects one of up to four banks of SRAM.

Pin Connections

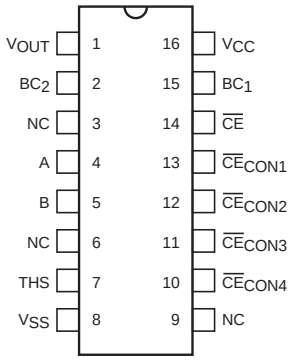

16-Pin Narrow DIP or SOIC

PN220401.eps

Pin Names

V_{OUT}	Supply output
BC_1–BC_2	3 volt primary backup cell inputs
THS	Threshold select input
$\overline{CE}$	chip-enable active low input
$\overline{CE}_{CON1}$–$\overline{CE}_{CON4}$	Conditioned chip-enable outputs
A–B	Decoder inputs
NC	No connect
V_{CC}	+5 volt supply input
V_{SS}	Ground

Functional Description

Up to four banks of CMOS static RAM can be battery-backed using the V_{OUT} and conditioned chip-enable output pins from the bq2204A. As V_{CC} slews down during a power failure, the conditioned chip-enable outputs $\overline{CE}_{CON1}$ through $\overline{CE}_{CON4}$ are forced inactive independent of the chip-enable input $\overline{CE}$.

This activity unconditionally write-protects the external SRAM as V_{CC} falls below an out-of-tolerance threshold V_{PFD}. V_{PFD} is selected by the threshold select input pin, THS. If THS is tied to V_{SS}, the power-fail detection occurs at 4.62V typical for 5% supply operation.

If THS is tied to V_{CC}, power-fail detection occurs at 4.37V typical for 10% supply operation. The THS pin must be tied to V_{SS} or V_{CC} for proper operation.

If a memory access is in process to any of the four external banks of SRAM during power-fail detection, that memory cycle continues to completion before the memory is write-protected. If the memory cycle is not terminated within time t_{WPT}, all four chip-enable outputs are unconditionally driven high, write-protecting the controlled SRAMs.

Dec. 1992 B

As the supply continues to fall past V_{PFD}, an internal switching device forces V_{OUT} to one of the two external backup energy sources. $\overline{CE}_{CON1}$ through $\overline{CE}_{CON4}$ are held high by the V_{OUT} energy source.

During power-up, V_{OUT} is switched back to the 5V supply as V_{CC} rises above the backup cell input voltage sourcing V_{OUT}. Outputs $\overline{CE}_{CON1}$ through $\overline{CE}_{CON4}$ are held inactive for time t_{CER} (120ms maximum) after the power supply has reached V_{PFD}, independent of the $\overline{CE}$ input, to allow for processor stabilization.

During power-valid operation, the $\overline{CE}$ input is passed through to one of the four $\overline{CE}_{CON}$ outputs with a propagation delay of less than 10ns. The $\overline{CE}$ input is output on one of the four $\overline{CE}_{CON}$ output pins depending on the level of the decode inputs at A and B as shown in the Truth Table.

The A and B inputs are usually tied to high-order address pins so that a large nonvolatile memory can be designed using lower-density memory devices. Nonvolatility and decoding are achieved by hardware hookup as shown in Figure 1.

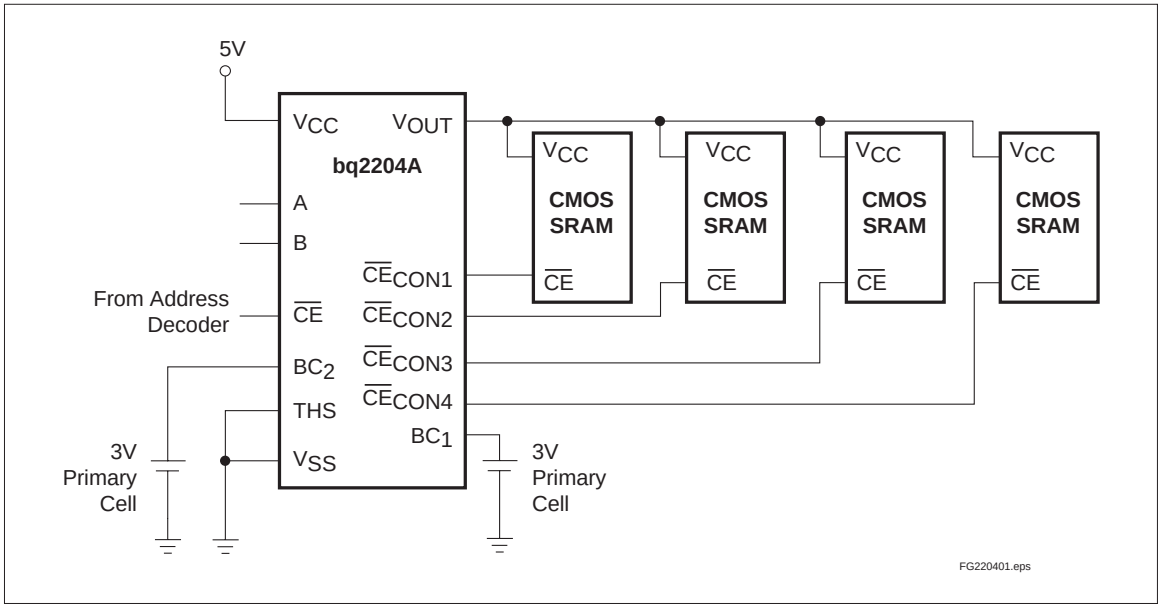

Figure 1. Hardware Hookup (5% Supply Operation)

Energy Cell Inputs—BC_1, BC_2

Two backup energy source inputs are provided on the bq2204A. The BC_1 and BC_2 inputs accept a 3V primary battery (non-rechargeable), typically some type of lithium chemistry. If no primary cell is to be used on either BC_1 or BC_2, the unused input should be tied to V_{SS}.

V_{CC} falling below V_{PFD} starts the comparison of BC_1 and BC_2. The BC input comparison continues until V_{CC} rises above V_{SO}. Power to V_{OUT} begins with BC_1 and switches to BC_2 only when V_{BC1} is less than V_{BC2} minus V_{BSO}. The controller alternates to the higher BC voltage only when the difference between the BC input voltages is greater than V_{BSO}. Alternating the backup batteries allows one-at-a-time battery replacement and efficient use of both backup batteries.

To prevent battery drain when there is no valid data to retain, V_{OUT} and $\overline{CE}_{CON1-4}$ are internally isolated from BC_1 and BC_2 by either of the following conditions:

- Initial connection of a battery to BC_1 or BC_2, or
- Presentation of an isolation signal on $\overline{CE}$.

A valid isolation signal requires $\overline{CE}$ low as V_{CC} crosses both V_{PFD} and V_{SO} during a power-down. See Figure 2. Between these two points in time, $\overline{CE}$ must be brought to the point of (0.48 to 0.52)*V_{CC} and held for at least 700ns. The isolation signal is invalid if $\overline{CE}$ exceeds 0.54*V_{CC} at any point between V_{CC} crossing V_{PFD} and V_{SO}.

The appropriate battery is connected to V_{OUT} and $\overline{CE}_{CON1–4}$ immediately on subsequent application and removal of V_{CC}.

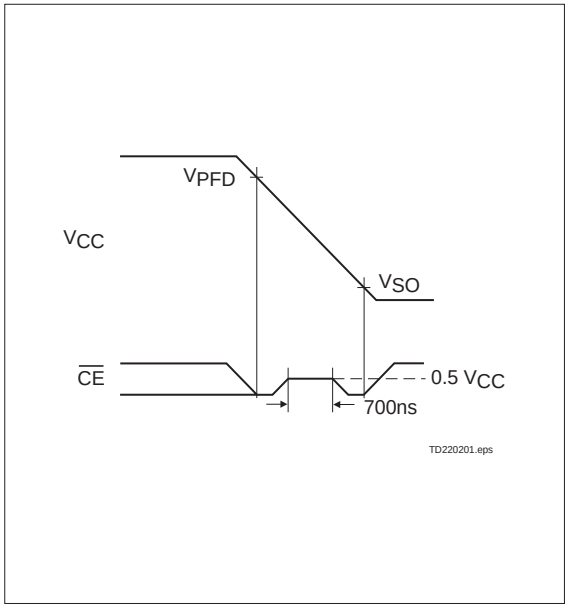

Figure 2. Battery Isolation Signal

Truth Table

Input			Output			
$\overline{CE}$	A	B	$\overline{CE}_{CON1}$	$\overline{CE}_{CON2}$	$\overline{CE}_{CON3}$	$\overline{CE}_{CON4}$
H	X	X	H	H	H	H
L	L	L	L	H	H	H
L	H	L	H	L	H	H
L	L	H	H	H	L	H
L	H	H	H	H	H	L

Absolute Maximum Ratings

Symbol	Parameter	Value	Unit	Conditions
V_{CC}	DC voltage applied on V_{CC} relative to V_{SS}	-0.3 to +7.0	V	
V_T	DC voltage applied on any pin excluding V_{CC} relative to V_{SS}	-0.3 to +7.0	V	$V_T \le V_{CC} + 0.3$
T_{OPR}	Operating temperature	0 to 70	°C	Commercial
		-40 to +85	°C	Industrial "N"
T_{STG}	Storage temperature	-55 to +125	°C	
T_{BIAS}	Temperature under bias	-40 to +85	°C	
T_{SOLDER}	Soldering temperature	260	°C	For 10 seconds
I_{OUT}	V_{OUT} current	200	mA	

Note: Permanent device damage may occur if **Absolute Maximum Ratings** are exceeded. Functional operation should be limited to the Recommended DC Operating Conditions detailed in this data sheet. Exposure to conditions beyond the operational limits for extended periods of time may affect device reliability.

Recommended DC Operating Conditions ($T_A = T_{OPR}$)

Symbol	Parameter	Minimum	Typical	Maximum	Unit	Notes
V_{CC}	Supply voltage	4.75	5.0	5.5	V	THS = V_{SS}
		4.50	5.0	5.5	V	THS = V_{CC}
V_{SS}	Supply voltage	0	0	0	V	
V_{IL}	Input low voltage	-0.3	-	0.8	V	
V_{IH}	Input high voltage	2.2	-	V_{CC} + 0.3	V	
V_{BC1}, V_{BC2}	Backup cell voltage	2.0	-	4.0	V	$V_{CC} < V_{BC}$
THS	Threshold select	-0.3	-	V_{CC} + 0.3	V	

Note: Typical values indicate operation at T_A = 25°C, V_{CC} = 5V or V_{BC}.

DC Electrical Characteristics ($T_A = T_{OPR}$, V_{CC} = 5V ± 10%)

Symbol	Parameter	Minimum	Typical	Maximum	Unit	Conditions/Notes
I_{LI}	Input leakage current	-	-	± 1	µA	$V_{IN} = V_{SS}$ to V_{CC}
V_{OH}	Output high voltage	2.4	-	-	V	I_{OH} = -2.0mA
V_{OHB}	V_{OH}, BC supply	V_{BC} - 0.3	-	-	V	$V_{BC} > V_{CC}$, I_{OH} = -10µA
V_{OL}	Output low voltage	-	-	0.4	V	I_{OL} = 4.0mA
I_{CC}	Operating supply current	-	3	6	mA	No load on outputs.
V_{PFD}	Power-fail detect voltage	4.55	4.62	4.75	V	THS = V_{SS}
		4.30	4.37	4.50	V	THS = V_{CC}
V_{SO}	Supply switch-over voltage	-	V_{BC}	-	V	
I_{CCDR}	Data-retention mode current	-	-	100	nA	V_{OUT} data-retention current to additional memory not included.
V_{BC}	Active backup cell voltage	-	V_{BC1}	-	V	$V_{BC1} > V_{BC2} + V_{BSO}$
		-	V_{BC2}	-	V	$V_{BC2} > V_{BC1} + V_{BSO}$
V_{BSO}	Battery switch-over voltage	0.25	0.4	0.6	V	
I_{OUT1}	V_{OUT} current	-	-	160	mA	$V_{OUT} > V_{CC}$ - 0.3V
I_{OUT2}	V_{OUT} current	-	100	-	µA	$V_{OUT} > V_{BC}$ - 0.2V

Note: Typical values indicate operation at T_A = 25°C, V_{CC} = 5V or V_{BC}.

Capacitance (T_A = 25°C, F = 1MHz, V_{CC} = 5.0V)

Symbol	Parameter	Minimum	Typical	Maximum	Unit	Conditions
C_{IN}	Input capacitance	-	-	8	pF	Input voltage = 0V
C_{OUT}	Output capacitance	-	-	10	pF	Output voltage = 0V

Note: This parameter is sampled and not 100% tested.

AC Test Conditions

Parameter	Test Conditions
Input pulse levels	0V to 3.0V
Input rise and fall times	5ns
Input and output timing reference levels	1.5V (unless otherwise specified)

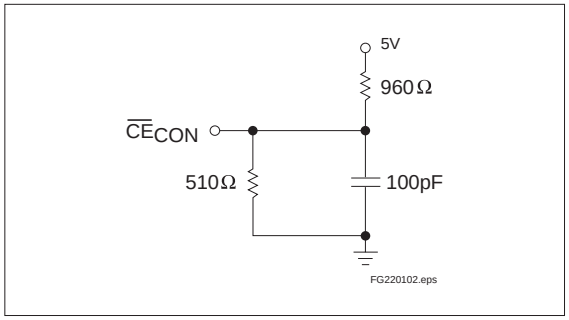

Figure 3. Output Load

Power-Fail Control ($T_A = T_{OPR}$)

Symbol	Parameter	Minimum	Typical	Maximum	Unit	Notes
t_{PF}	V_{CC} slew, 4.75V to 4.25V	300	-	-	µs	
t_{FS}	V_{CC} slew, 4.25V to V_{SO}	10	-	-	µs	
t_{PU}	V_{CC} slew, 4.25V to 4.75V	0	-	-	µs	
t_{CED}	chip-enable propagation delay	-	7	10	ns	
t_{AS}	A,B set up to $\overline{CE}$	0	-	-	ns	
t_{CER}	chip-enable recovery	40	80	120	ms	Time during which SRAM is write-protected after V_{CC} passes V_{PFD} on power-up.
t_{WPT}	Write-protect time	40	100	150	µs	Delay after V_{CC} slews down past V_{PFD} before SRAM is write-protected.

Note: Typical values indicate operation at T_A = 25°C, V_{CC} = 5V.

Caution: Negative undershoots below the absolute maximum rating of -0.3V in battery-backup mode may affect data integrity.

Power-Down Timing

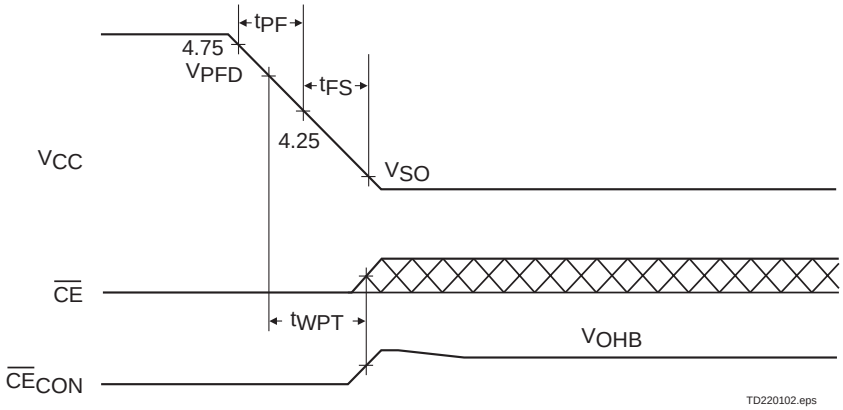

Power-Up Timing

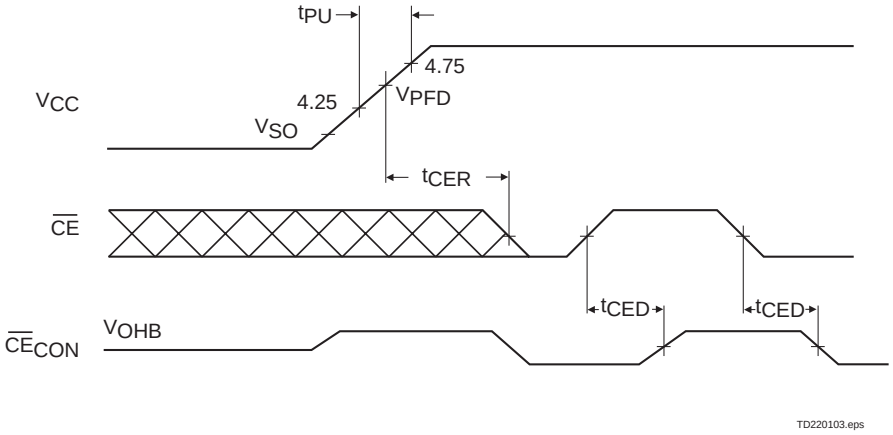

Address-Decode Timing

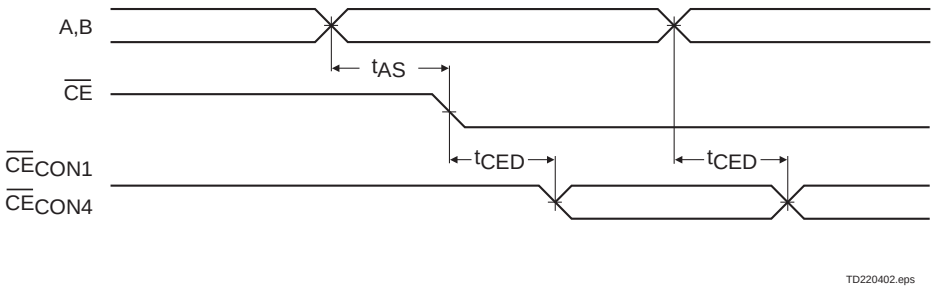

Dec. 1992 B

Data Sheet Revision History

Change No.	Page No.	Description of Change	Nature of Change
1	All	bq2204A replaces bq2204.	
1	1, 4–5	10% tolerance requires the THS pin to be tied to V_{CC}, not V_{OUT}.	
1	3	Energy cell input selection process alternates between BC_1 and BC_2.	

Note: Change 1 = Dec. 1992 changes from Sept. 1991

PACKAGING INFORMATION

Orderable part number	Status (1)	Material type (2)	Package | Pins	Package qty | Carrier	RoHS (3)	Lead finish/ Ball material (4)	MSL rating/ Peak reflow (5)	Op temp (°C)	Part marking (6)
BQ2204APN	Last Time Buy	Production	PDIP (N) | 16	25 | TUBE	Yes	NIPDAU	N/A for Pkg Type	0 to 70	2204APN
BQ2204APN.B	Last Time Buy	Production	PDIP (N) | 16	25 | TUBE	Yes	NIPDAU	N/A for Pkg Type	0 to 70	2204APN
BQ2204ASN	Last Time Buy	Production	SOIC (D) | 16	40 | TUBE	Yes	NIPDAU	Level-2-260C-1 YEAR	0 to 70	2204A
BQ2204ASN-N	Last Time Buy	Production	SOIC (D) | 16	40 | TUBE	Yes	NIPDAU	Level-2-260C-1 YEAR	-40 to 85	2204A
BQ2204ASN-N.B	Last Time Buy	Production	SOIC (D) | 16	40 | TUBE	Yes	NIPDAU	Level-2-260C-1 YEAR	-40 to 85	2204A
BQ2204ASN.B	Last Time Buy	Production	SOIC (D) | 16	40 | TUBE	Yes	NIPDAU	Level-2-260C-1 YEAR	0 to 70	2204A
BQ2204ASNTR	Last Time Buy	Production	SOIC (D) | 16	2500 | LARGE T&R	Yes	NIPDAU	Level-2-260C-1 YEAR	0 to 70	2204A
BQ2204ASNTR.B	Last Time Buy	Production	SOIC (D) | 16	2500 | LARGE T&R	Yes	NIPDAU	Level-2-260C-1 YEAR	0 to 70	2204A

(1) **Status:** For more details on status, see our product life cycle.

(2) **Material type:** When designated, preproduction parts are prototypes/experimental devices, and are not yet approved or released for full production. Testing and final process, including without limitation quality assurance, reliability performance testing, and/or process qualification, may not yet be complete, and this item is subject to further changes or possible discontinuation. If available for ordering, purchases will be subject to an additional waiver at checkout, and are intended for early internal evaluation purposes only. These items are sold without warranties of any kind.

(3) **RoHS values:** Yes, No, RoHS Exempt. See the TI RoHS Statement for additional information and value definition.

(4) **Lead finish/Ball material:** Parts may have multiple material finish options. Finish options are separated by a vertical ruled line. Lead finish/Ball material values may wrap to two lines if the finish value exceeds the maximum column width.

(5) **MSL rating/Peak reflow:** The moisture sensitivity level ratings and peak solder (reflow) temperatures. In the event that a part has multiple moisture sensitivity ratings, only the lowest level per JEDEC standards is shown. Refer to the shipping label for the actual reflow temperature that will be used to mount the part to the printed circuit board.

(6) **Part marking:** There may be an additional marking, which relates to the logo, the lot trace code information, or the environmental category of the part.

Multiple part markings will be inside parentheses. Only one part marking contained in parentheses and separated by a "~" will appear on a part. If a line is indented then it is a continuation of the previous line and the two combined represent the entire part marking for that device.

Important Information and Disclaimer: The information provided on this page represents TI's knowledge and belief as of the date that it is provided. TI bases its knowledge and belief on information provided by third parties, and makes no representation or warranty as to the accuracy of such information. Efforts are underway to better integrate information from third parties. TI has taken and continues to take reasonable steps to provide representative and accurate information but may not have conducted destructive testing or chemical analysis on incoming materials and chemicals. TI and TI suppliers consider certain information to be proprietary, and thus CAS numbers and other limited information may not be available for release.

In no event shall TI's liability arising out of such information exceed the total purchase price of the TI part(s) at issue in this document sold by TI to Customer on an annual basis.

TAPE AND REEL INFORMATION

REEL DIMENSIONS

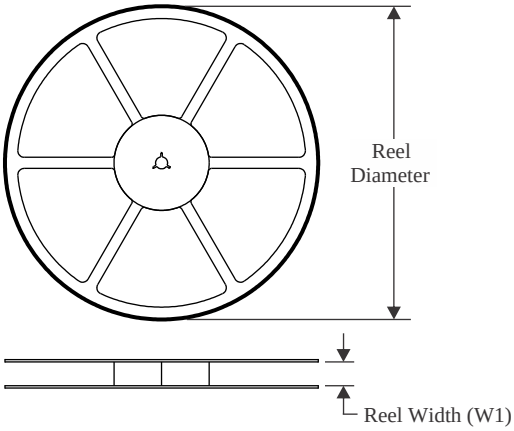

TAPE DIMENSIONS

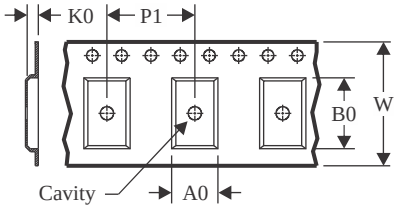

A0	Dimension designed to accommodate the component width
B0	Dimension designed to accommodate the component length
K0	Dimension designed to accommodate the component thickness
W	Overall width of the carrier tape
P1	Pitch between successive cavity centers

QUADRANT ASSIGNMENTS FOR PIN 1 ORIENTATION IN TAPE

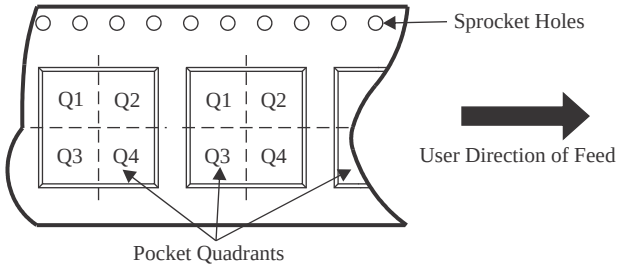

*All dimensions are nominal

Device	Package Type	Package Drawing	Pins	SPQ	Reel Diameter (mm)	Reel Width W1 (mm)	A0 (mm)	B0 (mm)	K0 (mm)	P1 (mm)	W (mm)	Pin1 Quadrant
BQ2204ASNTR	SOIC	D	16	2500	330.0	16.4	6.5	10.3	2.1	8.0	16.0	Q1

TAPE AND REEL BOX DIMENSIONS

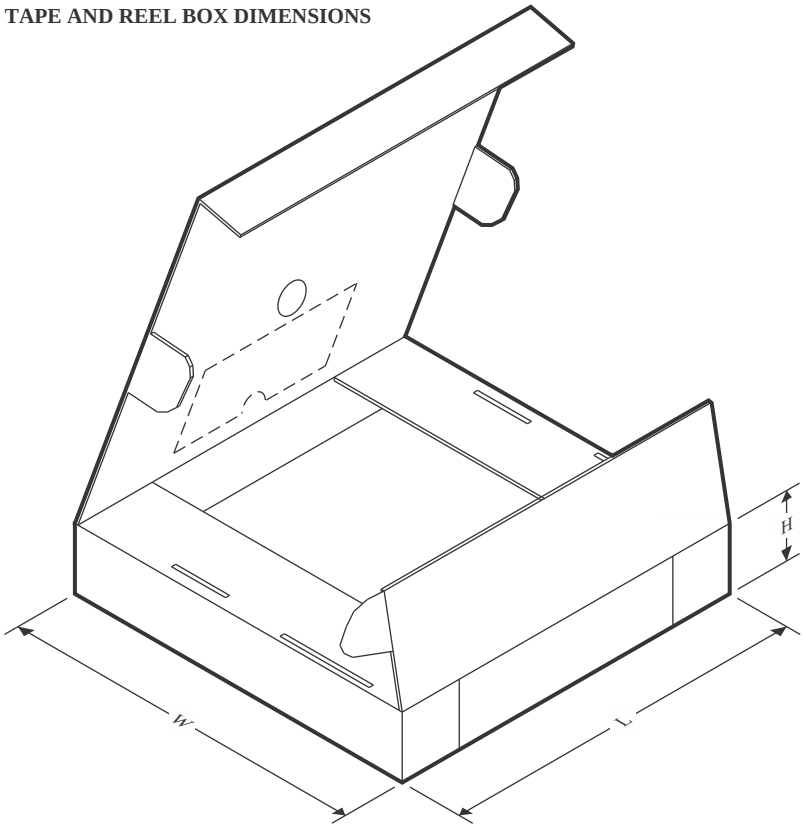

*All dimensions are nominal

Device	Package Type	Package Drawing	Pins	SPQ	Length (mm)	Width (mm)	Height (mm)
BQ2204ASNTR	SOIC	D	16	2500	353.0	353.0	32.0

TUBE

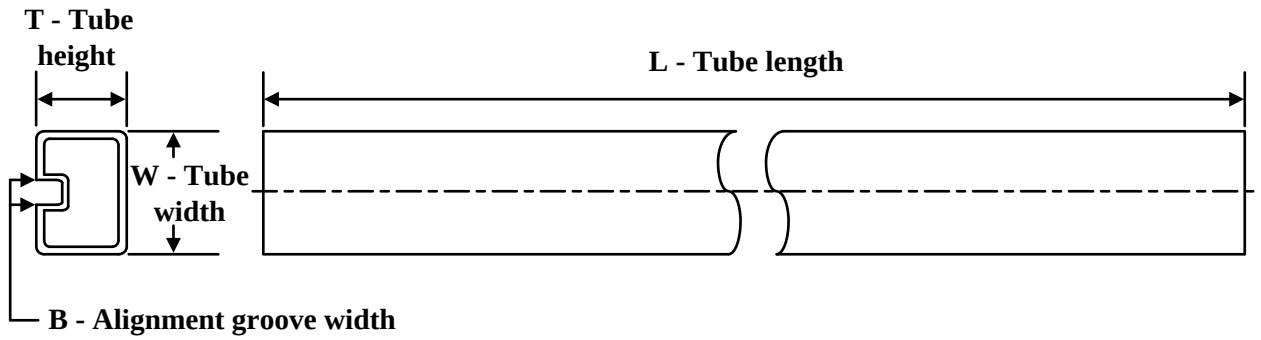

*All dimensions are nominal

Device	Package Name	Package Type	Pins	SPQ	L (mm)	W (mm)	T (µm)	B (mm)
BQ2204APN	N	PDIP	16	25	506	13.97	11230	4.32
BQ2204APN.B	N	PDIP	16	25	506	13.97	11230	4.32
BQ2204ASN	D	SOIC	16	40	506.6	8	3940	4.32
BQ2204ASN-N	D	SOIC	16	40	506.6	8	3940	4.32
BQ2204ASN-N.B	D	SOIC	16	40	506.6	8	3940	4.32
BQ2204ASN.B	D	SOIC	16	40	506.6	8	3940	4.32

IMPORTANT NOTICE AND DISCLAIMER

TI PROVIDES TECHNICAL AND RELIABILITY DATA (INCLUDING DATASHEETS), DESIGN RESOURCES (INCLUDING REFERENCE DESIGNS), APPLICATION OR OTHER DESIGN ADVICE, WEB TOOLS, SAFETY INFORMATION, AND OTHER RESOURCES “AS IS” AND WITH ALL FAULTS, AND DISCLAIMS ALL WARRANTIES, EXPRESS AND IMPLIED, INCLUDING WITHOUT LIMITATION ANY IMPLIED WARRANTIES OF MERCHANTABILITY, FITNESS FOR A PARTICULAR PURPOSE OR NON-INFRINGEMENT OF THIRD PARTY INTELLECTUAL PROPERTY RIGHTS.

These resources are intended for skilled developers designing with TI products. You are solely responsible for (1) selecting the appropriate TI products for your application, (2) designing, validating and testing your application, and (3) ensuring your application meets applicable standards, and any other safety, security, regulatory or other requirements.

These resources are subject to change without notice. TI grants you permission to use these resources only for development of an application that uses the TI products described in the resource. Other reproduction and display of these resources is prohibited. No license is granted to any other TI intellectual property right or to any third party intellectual property right. TI disclaims responsibility for, and you fully indemnify TI and its representatives against any claims, damages, costs, losses, and liabilities arising out of your use of these resources.

TI’s products are provided subject to TI’s Terms of Sale, TI’s General Quality Guidelines, or other applicable terms available either on ti.com or provided in conjunction with such TI products. TI’s provision of these resources does not expand or otherwise alter TI’s applicable warranties or warranty disclaimers for TI products. Unless TI explicitly designates a product as custom or customer-specified, TI products are standard, catalog, general purpose devices.

TI objects to and rejects any additional or different terms you may propose.

Copyright © 2026, Texas Instruments Incorporated

Last updated 10/2025