bq500511 Low Cost 5-V Wireless Power Transmitter Controller for WPC v1.2 A11 Transmitters

1 Features

- Digital Controller Compatible with Wireless Power Consortium v1.2 A11 Specification
- Designed to be Used with bq50002 Analog Front End
- Suitable for WPC and Proprietary 5-V Wireless Power Transmitters
- Supports Received Power up to 5 W
- Two Chip Solution Enables High Efficiency Transmitter Designs of >75%
- Ultra Low Standby Power, Even During Digital Ping (<30 mW)
- Dynamic Power Limiting (DPL)™ Enables Operation from Inputs Sources with Limited Power
- System LED Indication of Charging State and Fault Status
- Accurate Foreign Object Detection Method (FOD) Prevents Heating of Objects Between Transmitter and Receiver Coils

2 Applications

- WPC Compliant Wireless Chargers for Smart Phones and Wearable Applications
- Proprietary Wireless Chargers
- Medical and Industrial Applications
- Car and Other Vehicle Accessories
- See www.ti.com/wirelesspower for More Information on TI's Wireless Power Solutions

3 Description

The bq500511 is a wireless power transmitter controller that, when combined with the bq50002 analog front end device, integrates all functions required to create a Qi-compliant or proprietary 5-V transmitter. The bq500511 and bq50002 together provide a compact wireless charger solution. The bq500511 pings the surrounding environment for the receiver devices to be powered, safely engages the device, receives packet communication from the powered device and manages the power transfer according to WPC v1.2 specification.

To maximize flexibility in wireless power control applications, Dynamic Power Limiting™ (DPL) is featured on the bq500511. DPL enhances user experience by seamlessly optimizing the usage of power available from limited input supplies.

The system supports Foreign Object Detection (FOD) by continuously monitoring the efficiency of the established power transfer, protecting from power lost due to metal objects misplaced in the wireless power transfer field. Should any abnormal condition develop during power transfer, the bq500511 handles the condition and provides indication outputs. Comprehensive status and fault monitoring features enable a low cost yet robust Qi-certified wireless power system design.

The bq500511 is available in a thermally enhanced 6 mm x 6 mm, 40-pin VQFN package.

Device Information(1)

PART NUMBER	PACKAGE	BODY SIZE (NOM)
bq500511	VQFN (40)	6.00 mm x 6.00 mm

(1) For all available packages, see the orderable addendum at the end of the data sheet.

Simplified Schematic

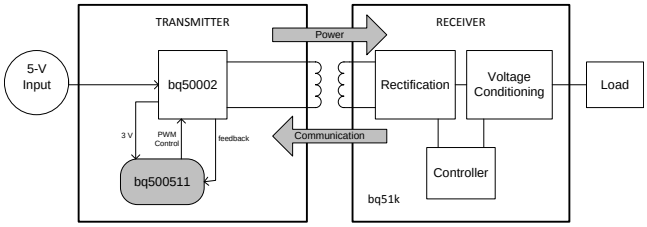

Efficiency

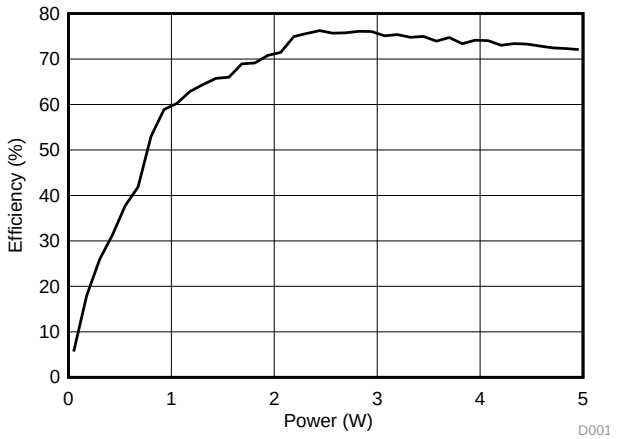

An IMPORTANT NOTICE at the end of this data sheet addresses availability, warranty, changes, use in safety-critical applications, intellectual property matters and other important disclaimers. PRODUCTION DATA.

Table of Contents

1 Features ... 1
2 Applications ... 1
3 Description ... 1
4 Revision History ... 2
5 Pin Configuration and Functions ... 3
6 Specifications ... 5
6.1 Absolute Maximum Ratings ... 5
6.2 ESD Ratings ... 5
6.3 Recommended Operating Conditions ... 5
6.4 Thermal Information ... 6
6.5 Electrical Characteristics ... 6
6.6 Typical Characteristics ... 6
7 Detailed Description ... 7
7.1 Overview ... 7
7.2 Functional Block Diagram ... 7
7.3 Feature Description ... 8
7.4 Device Functional Modes ... 12
8 Application and Implementation ... 14
8.1 Application Information ... 14
8.2 Typical Application ... 14
9 Power Supply Recommendations ... 18
10 Layout ... 18
10.1 Layout Guidelines ... 18
10.2 Layout Examples ... 19
11 Device and Documentation Support ... 22
11.1 Device Support ... 22
11.2 Documentation Support ... 22
11.3 Community Resources ... 22
11.4 Trademarks ... 22
11.5 Electrostatic Discharge Caution ... 22
11.6 Glossary ... 22
12 Mechanical, Packaging, and Orderable Information ... 22

4 Revision History

Changes from Original (August 2015) to Revision A	Page
• Changed from Product Preview to Production Data	1

Copyright © 2015, Texas Instruments Incorporated

5 Pin Configuration and Functions

RHA Package
40-Pin VQFN
Top View

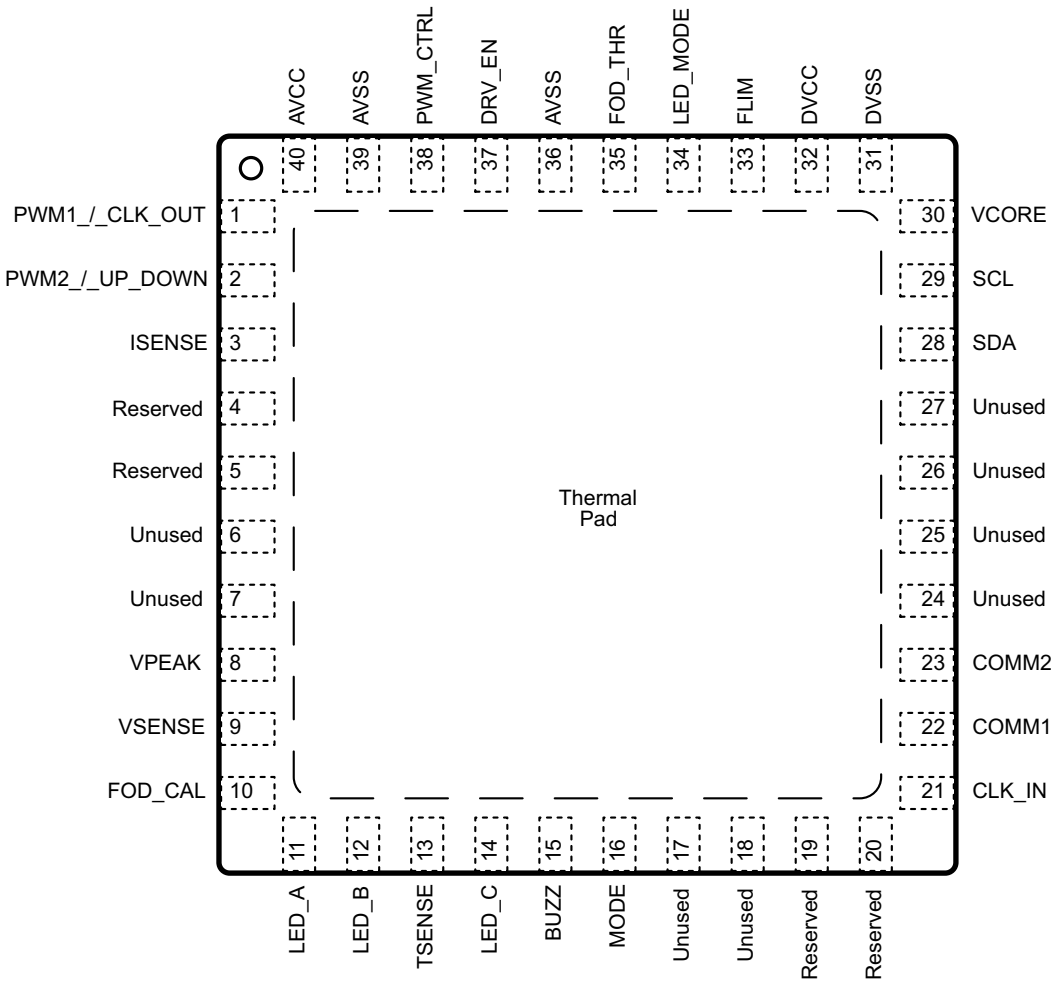

Pin Functions

PIN		I/O	DESCRIPTION
NAME	NO.		
AVCC	40	—	Analog I power supply.
AVSS	36, 39	—	Analog ground.
BUZZ	15	O	DC buzzer output. A 400-ms DC pulse when charging begins. This could also be connected to an LED via 1-kΩ resistor.
CLK_IN	21	I	CLK_OUT signal from the internal oscillator of the bq50002 Analog Front End.
COMM1	22	I	Communication channel 1. Typically generated by the bq50002 Analog Front End.
COMM2	23	I	Communication channel 2. Typically generated by the bq50002 Analog Front End.
DRV_EN	37	O	Driver enable.
DVCC	32	—	Digital power supply.
DVSS	31	—	Digital ground.
FLIM	33	I	Leave floating to conform to the WPC specification 205-kHz maximum operating frequency. Pull down with a 10-kΩ resistor to limit the maximum frequency to 190 kHz.
FOD_CAL	10	I	FOD calibration.
FOD_THR	35	I	FOD threshold.

Copyright © 2015, Texas Instruments Incorporated

Pin Functions (continued)

PIN		I/O	DESCRIPTION
NAME	NO.		
ISENSE	3	I	Input current sense.
LED_A	11	O	Connect to a LED via 1-kΩ resistor for status indication. Typically GREEN.
LED_B	12	O	Connect to a LED via 1-kΩ resistor for status indication. Typically RED.
LED_C	14	O	Connect to a LED via 1-kΩ resistor for status indication. Typically ORANGE.
LED_MODE	34	I	LED mode selection.
MODE	16	O	MODE is an output intended for use by the bq50002 Analog Front End indicating whether adjustments should be made using frequency (when MODE is low) or duty-cycle (when MODE is high).
PWM1 / CLK_OUT	1	O	If PWM_CTRL is high, this pin outputs PWM1 signal. If PWM_CTRL is low, this pin outputs clock signal. The rising edge of the clock is used to adjust frequency (MODE low) or duty cycle (MODE high) output of the bq50002 Analog Front End.
PWM_CTRL	38	O	PWM_CTRL is an output intended for use by the bq50002 Analog Front End to select whether its PWM outputs are generated internally within the bq50002 itself (PWM_CTRL HIGH), or whether they are simply passed through from external signals (PWM_CTRL LOW).
PWM2 / UP_DOWN	2	O	If PWM_CTRL is high, this pin outputs PWM2 signal. If PWM_CTRL is low, this pin is used to adjust the frequency (MODE low) or duty cycle (MODE high) of the external PWM output. If this signal is high, it decrease frequency or increase duty cycle. If this signal is low, it increases frequency or decreases duty cycle output of the bq50002 Analog Front End.
Reserved	4	I	Leave this pin open.
Reserved	5	I	Unused
Reserved	19	I	Reserved. Leave this pin open.
Reserved	20	I/O	Reserved. Leave this pin open.
SCL	29	I/O	10-kΩ pull-up resistor to 3-V supply. I^2C Clock.
SDA	28	I/O	10-kΩ pull-up resistor to 3-V supply. I^2C Data.
TSENSE	13	I	Temperature sensing for safety shutdown. Connect to 3 V via 10-kΩ resistor if unused.
Unused	6	I	Leave this pin open.
Unused	7	I/O	Leave this pin open.
Unused	17, 18, 24–27	I/O	Leave this pin open.
VCORE	30	—	Regulated internal core power supply. Connect via 0.4-µF capacitor to ground.
VPEAK	8	I	Peak coil voltage.
VSENSE	9	I	Input voltage sense.

Copyright © 2015, Texas Instruments Incorporated

6 Specifications

6.1 Absolute Maximum Ratings

over operating free-air temperature range (unless otherwise noted)[1]

		MIN	MAX	UNIT
Voltage	Applied at VCC to VSS	–0.3	4.1	V
	Applied to any pin (excluding VCORE)[2]	–0.3	VCC + 0.3	V
Diode current at any device pin		–2	2	mA
Maximum junction temperature, T_J			95[3]	°C
Storage temperature, T_{stg}		–55	95	°C

(1) Stresses beyond those listed under *Absolute Maximum Ratings* may cause permanent damage to the device. These are stress ratings only, which do not imply functional operation of the device at these or any other conditions beyond those indicated under *Recommended Operating Conditions*. Exposure to absolute-maximum-rated conditions for extended periods may affect device reliability.
(2) All voltages referenced to V_{SS}. VCORE is for internal device use only. No external DC loading or voltage should be applied.
(3) It is recommended to follow the current JEDEC J-STD-020 specification with peak reflow temperatures not higher than classified on the device label on the shipping boxes or reels. In general, hand soldering is not recommended. However, if hand soldering is required for application prototyping, peak temperature must not exceed 250°C for longer than 30 seconds durations. In addition, during storage, the maximum storage temperature of 95°C should not be exceeded.

6.2 ESD Ratings

			VALUE	UNIT
$V_{(ESD)}$	Electrostatic discharge	Human-body model (HBM), per ANSI/ESDA/JEDEC JS-001[1]	1000	V
		Charged-device model (CDM), per JEDEC specification JESD22-C101[2]	250	

(1) JEDEC document JEP155 states that 500-V HBM allows safe manufacturing with a standard ESD control process.
(2) JEDEC document JEP157 states that 250-V CDM allows safe manufacturing with a standard ESD control process.

6.3 Recommended Operating Conditions

over operating free-air temperature range (unless otherwise noted)

		MIN	NOM	MAX	UNIT
V_{CC}	Supply voltage during program execution and FRAM programming (AVCC = DVCC)[1]	2		3.6	V
V_{SS}	Supply voltage (AVSS = DVSS)		0		V
T_A	Operating free-air temperature	–40		85	°C
T_J	Operating free-air temperature	–40		85	°C
$C_{(VCORE)}$	Required capacitor at VCORE[2]		470		nF
$C_{(VCC)}/C_{(VCORE)}$	Capacitor ratio of VCC to VCORE	10			nF

(1) It is recommended to power AVCC and DVCC from the same source. A maximum difference of 0.3 V between AVCC and DVCC can be tolerated during power up and operation.
(2) A capacitor tolerance of ±20% or better is required.

Copyright © 2015, Texas Instruments Incorporated

6.4 Thermal Information

THERMAL METRIC[1]		bq500511 RHA (VQFN) 40 PINS	UNIT
$R_{\theta JA}$	Junction-to-ambient thermal resistance	31.8	°C/W
$R_{\theta JC(top)}$	Junction-to-case (top) thermal resistance	18.5	°C/W
$R_{\theta JB}$	Junction-to-board thermal resistance	6.8	°C/W
ψ_{JT}	Junction-to-top characterization parameter	0.2	°C/W
ψ_{JB}	Junction-to-board characterization parameter	6.7	°C/W
$R_{\theta JC(bot)}$	Junction-to-case (bottom) thermal resistance	1.8	°C/W

(1) For more information about traditional and new thermal metrics, see the *Semiconductor and IC Package Thermal Metrics* application report, SPRA953.

6.5 Electrical Characteristics

over operating free-air temperature range (unless otherwise noted)

PARAMETER		TEST CONDITIONS		MIN	TYP	MAX	UNIT
$I_{(AM)}$	Active Mode Supply Current into V_{CC}	3 V			3.45	4.3	mA
$L_{(LPM)}$	Low-Power Mode Supply Current into V_{CC}	3 V	–40°C		274		µA
			25°C		285	340	µA
			60°C		315		µA
			85°C		340	455	µA

6.6 Typical Characteristics

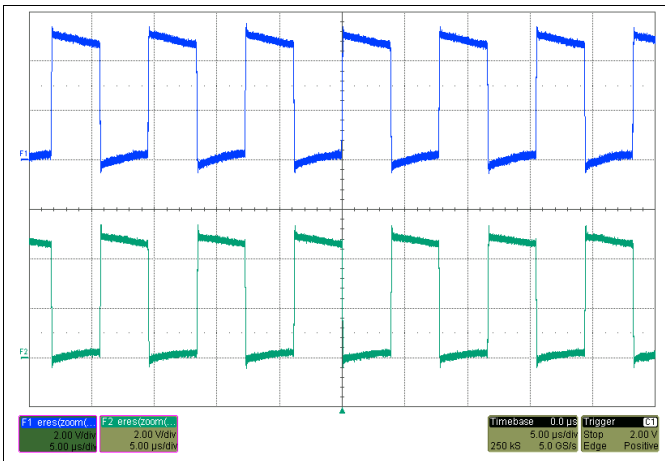

Figure 1. Waveform (bq50002) SW1, SW2

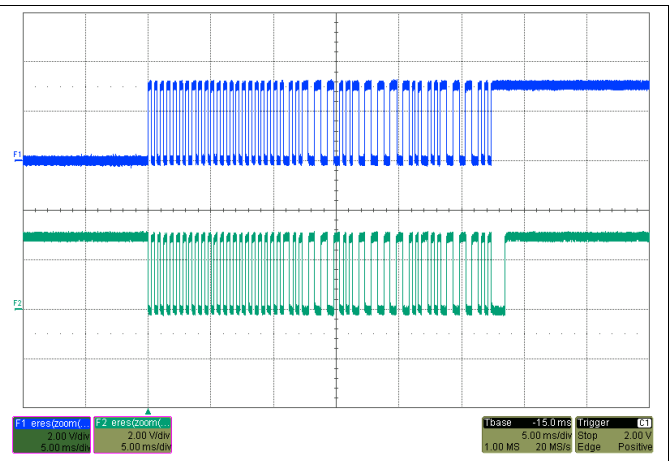

Figure 2. Waveform COMM1, COMM2

Copyright © 2015, Texas Instruments Incorporated

7 Detailed Description

7.1 Overview

The principle of wireless power transfer is simply an open-cored transformer consisting of transmitter and receiver coils. The transmitter coil and electronics are typically built into a charger pad and the receiver coil and electronics are typically built into a portable device, such as a cell phone. When the receiver coil is positioned on the transmitter coil, magnetic coupling occurs when the transmitter coil is driven. The flux is coupled into the secondary coil, which induces a voltage and current flows. The secondary voltage is rectified, and power can be transferred effectively to a load, wirelessly. Power transfer can be managed through various closed loop control schemes.

After power is applied and the transmitter device comes out of reset, it will automatically begin the process of detecting and powering a receiver. The bq500511 sends a ping to detect the presence of a receiver on the pad. After a receiver is detected, the bq500511 attempts to establish communication and begin power transfer. The bq500511 is designed to operate with the bq50002 Wireless Power Transmitter Analog Front End to control a full-bridge power stage to drive the primary coil. Through a simple interface the bq500511 instructs the bq50002 how much to increase or decrease power. The full bridge power stage allows for higher power delivery for a given supply voltage.

7.2 Functional Block Diagram

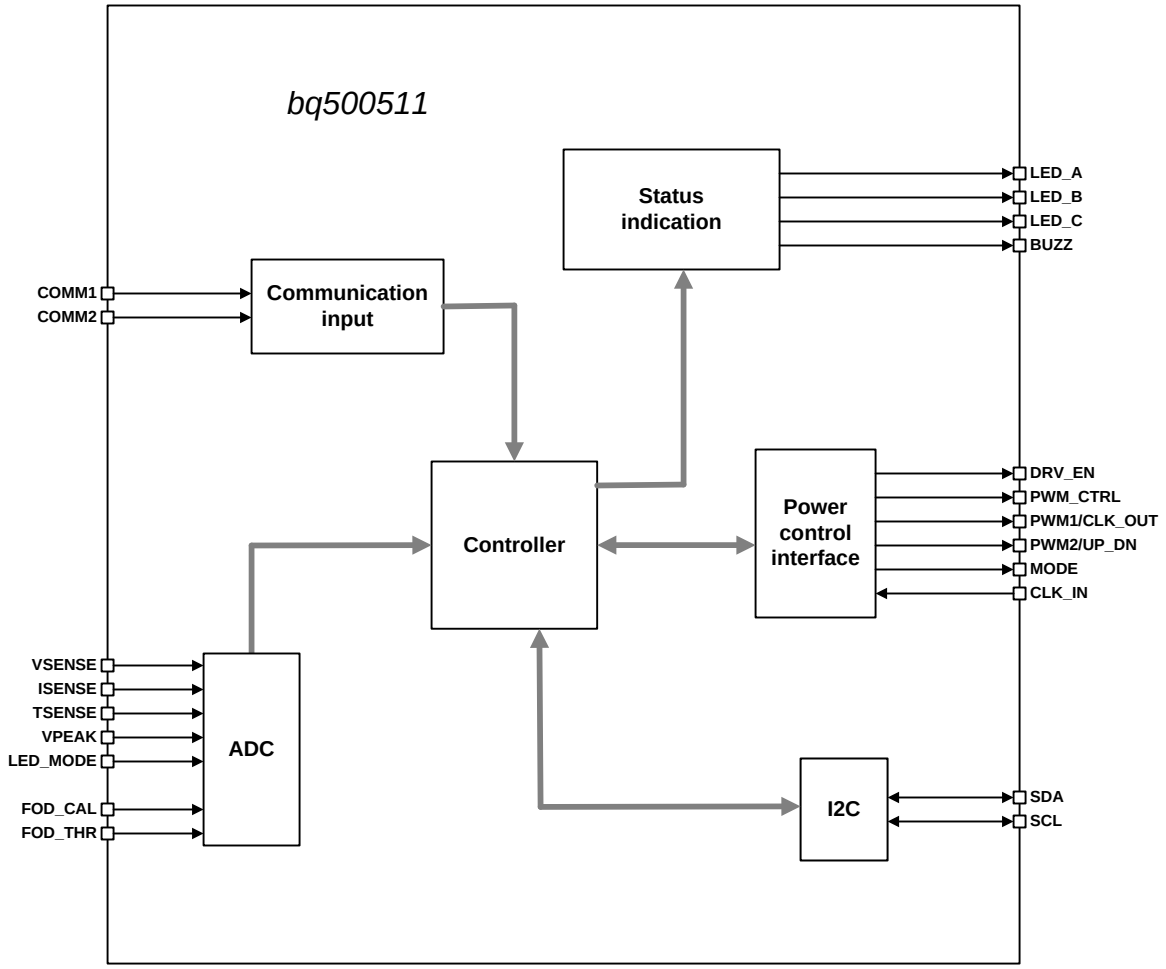

7.3 Feature Description

7.3.1 A11 Coil Specification

The bq500511 controller supports the A11 transmitter coil type for which the coil and matching capacitor specification has been established by the WPC Standard although the device can be used in a proprietary (non-WPC) system. This is fixed and cannot be changed on the transmitter side.

For a current list of coil vendors, see *bqTESLA Transmitter Coil Vendors*, SLUA649.

7.3.2 Option Select Pins

There are three option select pins on the bq500511. Two (FOD_CAL and FOD_THR) are used to calibrate the foreign object detection algorithm. The third (LED_MODE) selects the LED output behavior. The voltages on these pins will be read by bq500511 at power-up.

For LED_MODE, the selected bin determines the LED behavior based on Table 1.

See section *Foreign Object Detection (FOD) and FOD Calibration* for more information on the remaining option select pins.

7.3.3 LED Modes

The bq500511 can directly drive three LED outputs (pin 11, pin 12, and pin 14) through a simple current limit resistor (typically 470 Ω), based on the mode selected. The three current limit resistors can be individually adjusted to tune or match the brightness of the LEDs. Do not exceed the maximum output current rating of the device.

Several predefined LED display schemes are selectable via the voltage on the LED_MODE pin at startup. Any means of setting the LED_MODE voltage can be used; if a resistor divider between 3 V and ground is used as shown in Figure 3, relatively large values should be used to minimize the idle power loss. With 100 kΩ used for the upper resistor values for the lower resister, RLED selects one of the desired LED indication schemes presented in Table 1.

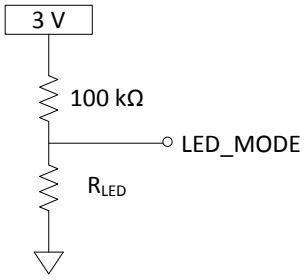

Figure 3. LED_MODE Selection

Table 1. LED Control

LED CONTROL OPTION	R_{LED} SELECTION RESISTOR (kΩ)	DESCRIPTION	LED	OPERATIONAL STATES					
				STANDBY	POWER TRANSFER(1)	CHARGE COMPLETE	FAULT(1)(2)	FOD WARNING(2)	DPL(1)
1	24.9	2-LED option #1	LED_A (green)	off	blink slow	on	off	off	blink slow
			LED_B (red)	off	off	off	on	blink fast	blink slow
			LED_C (orange)	–	–	–	–	–	–
2	36.5	2-LED option Standby LED's	LED_A (green)	on	blink slow	on	off	off	blink slow
			LED_B (red)	on	off	off	on	blink fast	blink slow
			LED_C (orange)	–	–	–	–	–	–
3	49.9	Single LED option	LED_A (green)	off	on	off	blink fast	on	on
			LED_B (red)	–	–	–	–	–	–
			LED_C (orange)	–	–	–	–	–	–

(1) blink slow = 1.25 Hz
(2) blink fast = 5 Hz

Copyright © 2015, Texas Instruments Incorporated

Feature Description (continued)

Table 1. LED Control (continued)

LED CONTROL OPTION	R_{LED} SELECTION RESISTOR (kΩ)	DESCRIPTION	LED	OPERATIONAL STATES					
				STANDBY	POWER TRANSFER(1)	CHARGE COMPLETE	FAULT(1)(2)	FOD WARNING(2)	DPL(1)
4	66.5	2-LED option #2	LED_A (green)	off	on	off	off	off	–
			LED_B (red)	off	off	off	on	blink fast	blink slow
			LED_C (orange)	–	–	–	–	–	–
5	86.6	3-LED option #1	LED_A (green)	off	off	on	off	off	
			LED_B (red)	off	on	off	on	on	on
			LED_C (orange)	off	off	off	off	off	off
6	113	3-LED option #2	LED_A (green)	off	blink slow	on	off	off	off
			LED_B (red)	off	off	off	on	blink fast	off
			LED_C (orange)	off	off	off	off	off	blink slow
7	147	3-LED option #3	LED_A (green)	off	blink slow	off	off	off	off
			LED_B (red)	off	off	on	off	off	off
			LED_C (orange)	off	off	off	on	blink fast	blink slow
8	200	2-LED option #3	LED_A (green)	off	off	on	blink slow	off	off
			LED_B (red)	off	on	off	blink slow	on	on
			LED_C (orange)	–	–	–	–	–	–
9	274	2-LED option #4	LED_A (green)	off	blink slow	on	off	off	blink slow
			LED_B (red)	off	off	off	on	blink fast	blink slow
			LED_C (orange)	–	–	–	–	–	–
10	392	2-LED option #5	LED_A (green)	off	on	off	blink fast	on	blink slow
			LED_B (red)	off	off	on	off	off	off
			LED_C (orange)	–	–	–	–	–	–

7.3.4 Foreign Object Detection (FOD) and FOD Calibration

The bq500511 supports FOD in order to meet the requirements of the WPC v1.2 specification and to protect against the heating of metal objects between coils. Continuously monitoring input power, known losses, and the value of power reported by the receiver device being charged, the bq500511 can estimate how much power is unaccounted for and presumed lost due to metal objects placed in the wireless power transfer path. If this unexpected loss exceeds the threshold set by the FOD resistors, a fault is indicated and power transfer is halted

As the default, the FOD resistors should set a threshold of 400 mW which has been empirically determined using standard WPC FOD test objects (disc, ring and foil). Some tuning might be required as every system will be slightly different. This tuning is best done by trial and error: increase or decrease the loss threshold and retry the system with the standard test objects. The ultimate goal of the FOD feature is safety; to protect misplaced metal objects from becoming hot. Reducing the loss threshold and making the system too sensitive may lead to a false object detection and a bad user experience. Find the balance which best suits the application.

If the application requires disabling FOD, it is possible by tying the FOD_THR pin to 3 V.

NOTE

Disabling FOD results in a TX solution that is not WPC v1.2 compliant.

The FOD_CAL input, can be used to compensate for any load-dependent effect on the power loss. Using a calibrated FOD reference receiver with no foreign objects present, FOD_CAL should be selected such that the calculated loss across the load range is substantially constant (within approximately 100 mW). After correcting for the load dependence, the FOD thresholds should be re-set above the resulting average by approximately 400 mW for the transmitter to satisfy the WPC requirements on tolerated heating.

Similarly to the LED_MODE selection, FOD_THR and FOD_CAL are set based on the voltage of their inputs (pins 35 and 10 respectively) measured when the device is powered up.

$$FOD_threshold = FOD_THR \times 400 \quad (1)$$

Where:

FOD_threshold is the maximum allowed loss in mW, above which a FOD fault is triggered.
FOD_THR is the voltage on pin 35 in volts (between 0 and 2.5 Volts).

For example, to set the recommended starting threshold of 400 mW, 1 V should be applied to FOD_THR; this could be accomplished with a resistor divider between 3 V and ground consisting of 200 kΩ over 100 kΩ.

The value for FOD_CAL is calculated with an offset to allow a correction which either increases or decreases with load.

$$FOD_correction = -1000 + FOD_CAL \times 800 \quad (2)$$

Where:

FOD_correction is load dependent correction in mW/Amp.
FOD_CAL is the voltage on pin 10 in volts (between 0 and 2.5 Volts).

For both the FOD_THR and FOD_CAL inputs, an internal analog to digital converter with a range of 0 V – 2.5 V is used to measure the input. The combined range and gain provide attainable ranges of 0 mW to 1000 mW for FOD_threshold, and –1000 mW/A to +1000 mW/A for FOD_correction.

Contact TI for the TX tuning tool to set appropriate FOD_THR and FOD_CAL values for your design.

7.3.5 Shut Down Through External Thermal Sensor or Trigger

Typical applications of the bq500511 do not require additional thermal protection. This shutdown feature is provided for enhanced applications and is not limited to thermal shutdown. The key parameter is the 1 V threshold on pin 13, TSENSE. Voltage below 1 V on pin 13 causes the device to shut down. The application of thermal monitoring through a negative temperature coefficient (NTC) sensor, for example, is straightforward. The NTC forms the lower leg of a temperature-dependent voltage divider. The NTC leads are connected to the bq500511 device, pin 13 and GND. The threshold on pin 13 is set to 1 V, below which the system shuts down and indicates a fault (indication depending on LED mode chosen).

To implement this feature follow these steps:

1. Consult the NTC data sheet and find the resistance versus temperature curve.
2. Determine the actual temperature where the NTC will be placed by using a thermal probe.
3. Read the NTC resistance at that temperature in the NTC datasheet, that is R_NTC.
4. Use the following formula to determine the upper leg resistor (R_Setpoint):

$$R_Setpoint = 2.3 \times R_NTC \quad (3)$$

The system restores normal operation after approximately five minutes or if the receiver is removed. If the feature is not used, this pin must be pulled high.

NOTE

Pin 13, TSENSE, must always be terminated; otherwise, erratic behavior may occur.

Copyright © 2015, Texas Instruments Incorporated

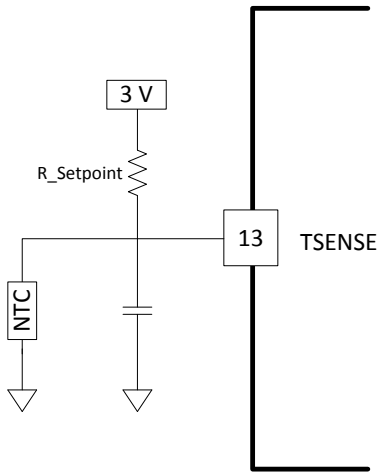

Figure 4. NTC Application (optional)

7.3.6 Fault Handling and Indication

Table 2 shows end power transfer (EPT) packet responses, fault conditions, and the duration of how long the condition lasts until a retry in attempted. The LED mode selected determines how the LED indicates the condition or fault.

Table 2. Fault Handling and Indication

CONDITION	DURATION(1) (before retry)	COMMENTS IMMEDIATE(2)
EPT-00		unknown
EPT-01	5 seconds	charge complete
EPT-02	Infinite	internal fault
EPT-03	5 minutes	over temperature
EPT-04	Immediate	over voltage
EPT-05	Immediate	over current
EPT-06	Infinite	battery failure
EPT-07	Not applicable	reconfigure
EPT-08	Immediate	no response
OVP	Immediate	TX over voltage
NTC	5 minutes	TX over temperature
FOD warning	12 seconds	buzzer and LED
FOD trip	5 minutes	same as over temp

(1) After a FAULT, the magnetic field is re-characterized to improve the ability to detect the removal of the at-fault receiver. If the receiver is removed in the first second immediately following the detection of this fault (before the re-characterization is complete), the field corresponding to an empty pad may be associated with the faulty receiver and the LED indication may continue to indicate a fault state even though no receiver is present. This indication persists until either the HOLDOFF time expires or a new receiver disturbs the field, at which time normal operation, with proper LED indication, is resumed.
(2) "Immediate" is less than 1 second.

7.3.7 Power Transfer Start Signal

The bq500511 provides an output signal to indicate that power transfer has begun. Pin 15, BUZZ, outputs a 400-ms duration, 4-kHz square wave appropriate to drive a low cost AC type ceramic buzzers. If not used, this pin should be left open.

7.3.8 Power-On Reset

The bq500511 has an integrated power-on reset (POR) circuit which monitors the supply voltage and handles the correct device startup sequence. Additional supply voltage supervisor or reset circuits are not needed.

7.3.9 Trickle Charge and CS100

The WPC specification provides an EPT message (EPT–01) to indicate charge complete. Upon receipt of the charge complete message, the bq500511 disables the output and changes the LED indication. The exact indication depends on the LED_MODE chosen. In some battery charging applications, there is a benefit to continue the charging process in trickle-charge mode to top off the battery. The WPC specification provides for an informational 'Charge Status' packet that conveys the level of battery charger. The bq500511 uses this command to enable top-off charging. The bq500511 changes the LED indication to reflect charge complete when a Charge Status message indicating 100% is received, but unlike the response to an EPT, it will not halt power transfer even though the LED indicates charge complete. The mobile device can use a CS100 packet to enable trickle charge mode. If the reported charge status drops below 90%, normal charging indication is resumed.

7.4 Device Functional Modes

7.4.1 Power Transfer

Power transfer efficiency and robustness depends on coil coupling. Coupling depends on the distance between coils, alignment, coil dimensions, coil materials, number of turns, magnetic shielding, impedance matching, frequency, and duty cycle. Most importantly, the receiver and transmitter coils must be aligned for best coupling and efficient power transfer. The smaller the space between the coils is, the better the coupling. Shielding is added as a backing to both the transmitter and receiver coils to direct the magnetic field to the coupled zone. Magnetic fields outside the coupled zone do not transfer power. Thus, shielding also serves to contain the fields to avoid coupling to other adjacent system components.

Regulation can be achieved by controlling any one of the coil coupling parameters. However, for WPC compatibility, the transmitter-side coils and capacitance are specified and the resonant frequency point is fixed. Power transfer is regulated by changing the operating frequency between 110 kHz to 205 kHz. The higher the frequency, the further from resonance and the lower the power. Duty cycle remains constant at 50% throughout the power band and is reduced only once 205 kHz is reached.

7.4.1.1 Dynamic Power Limiting™

Dynamic Power Limiting™ (DPL) allows operation from a 5-V supply with limited current capability (such as a USB port). When the input voltage is observed drooping, the output power is dynamically limited to reduce the load and provides margin relative to the supply's capability.

Anytime the DPL control loop is regulating the operating point of the transmitter, the LED will indicate that DPL is active. The LED color and flashing pattern are determined by the LED Table. If the receiver sends a Control Error Packet (CEP) with a negative value, (for example, to reduce power to the load), the bq500511 in DPL mode will return to normal operation and respond to this CEP via the standard WPC control loop behavior.

7.4.1.2 Operating Frequency Limiting

Pin-33, FLIM, can be used to set an upper operating frequency limit of 190 kHz by pulling down with a 10-kΩ resistor. Regulatory bodies in some countries have proposed that wireless power transmitters limit operation at this point. While not required anywhere today, this forward looking option provides the means for a simple design modification to address that possible future requirement. A weak internal pull-up allows normal operation without any applied bias.

Note that this feature may prevent WPC certification.

7.4.2 Communication

Communication within the WPC v1.2 specification is from the receiver to the transmitter. For example, in order to regulate the output of the transmitter, the receiver sends messages requesting the transmitter to increase or decrease power. The receiver communicates by modulating the rectifier voltage and using amplitude modulation (AM) sends packets of information to the transmitter. A packet is comprised of a preamble, a header, the actual message, and a checksum, as defined by the WPC standard.

Copyright © 2015, Texas Instruments Incorporated

Device Functional Modes (continued)

The receiver sends a packet by modulating an impedance network. This AM signal reflects back as a change in the voltage amplitude on the transmitter coil. In the bq500511/bq50002 system, the bq50002 performs the demodulation function and passes a digitized version of the message to the bq500511 where the message is decoded and processed. For example in response to a Control Error Packet, the bq500511 calculates the required change in output power and in turn controls the bq50002 through the CLK_OUT, UP_DOWN, and MODE pins to adjust the operating point and thus its output power.

The modulation impedance network on the receiver can either be resistive or capacitive. Figure 5 shows the resistive modulation approach, where a resistor is periodically added to the load, resulting in an amplitude change in the transmitter voltage. Figure 6 shows the corresponding capacitive modulation approach.

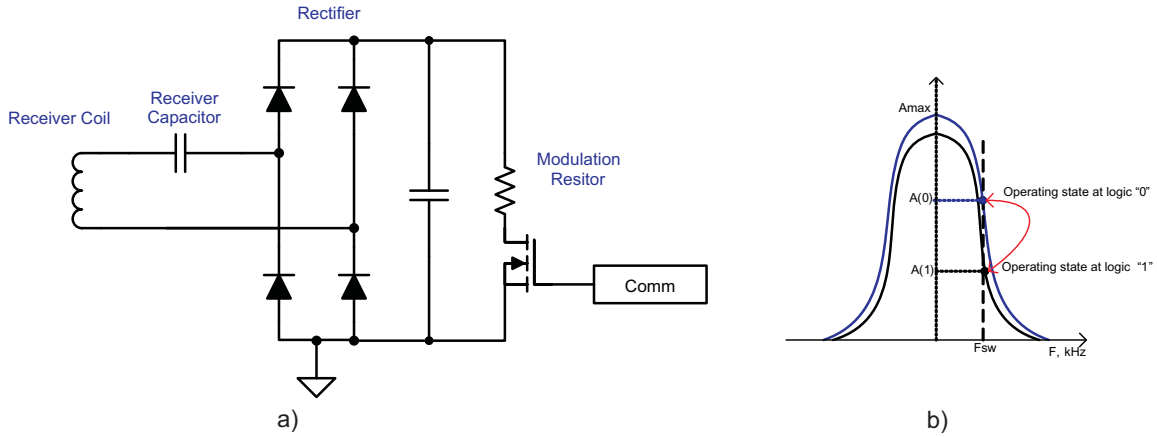

Figure 5. Receiver Resistive Modulation Circuit

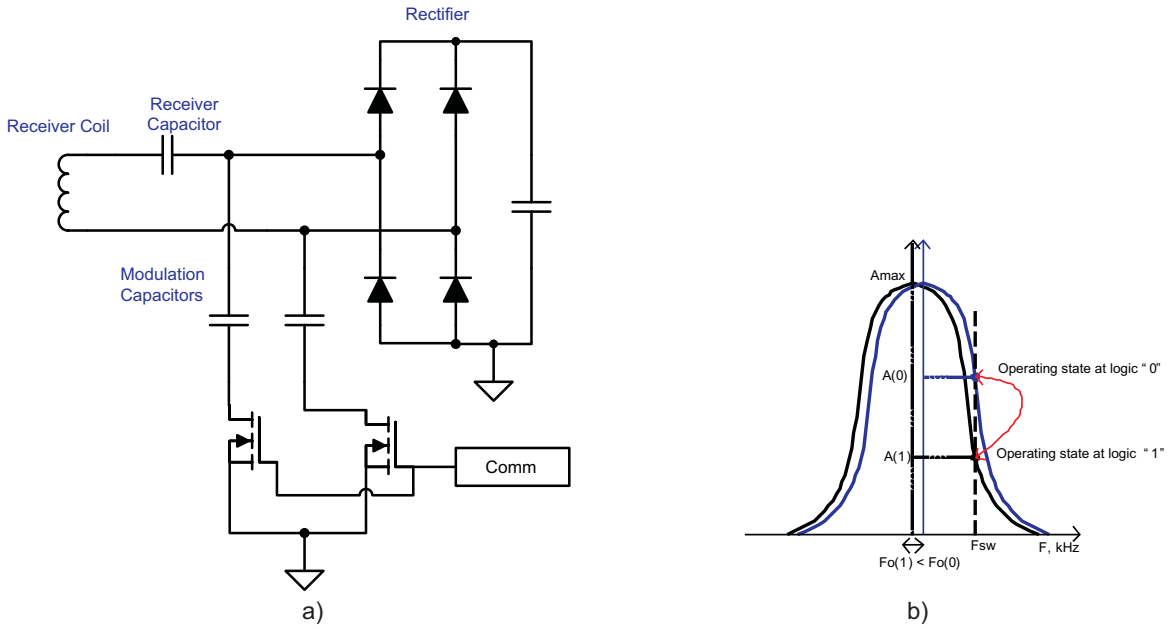

Figure 6. Receiver Capacitive Modulation Circuit

8 Application and Implementation

NOTE

Information in the following applications sections is not part of the TI component specification, and TI does not warrant its accuracy or completeness. TI's customers are responsible for determining suitability of components for their purposes. Customers should validate and test their design implementation to confirm system functionality.

8.1 Application Information

The bq500511 device is a wireless power transmitter controller designed for 5W WPC compliant applications when paired with the bq50002. The pair integrates all functions required to control wireless power transfer to a WPC v1.2 compliant receiver. Several tools are available for the design of the system. See the product folder on www.ti.com for more details. The following sections highlight some of the system design considerations.

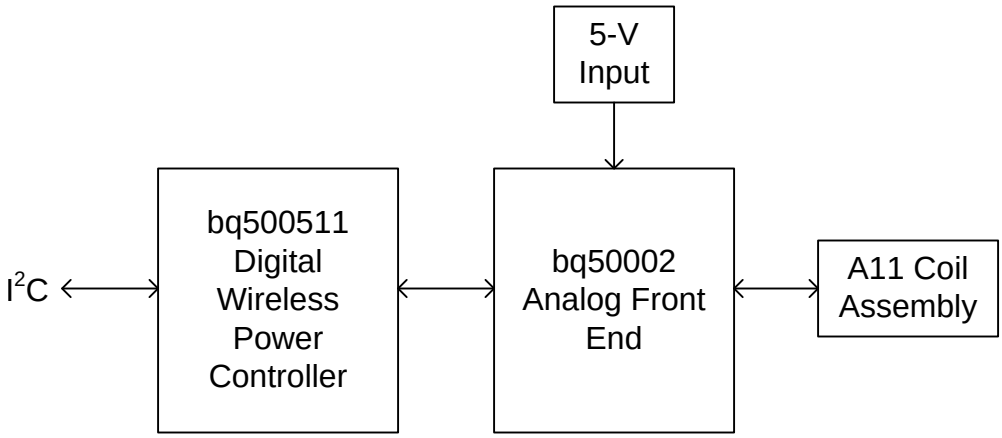

Figure 7. bq500511 System Block Diagram

The I^2C port is accessed by the FOD tuning tool and can provide a level of system monitoring and evaluation.

The SDA and SCL lines of the I^2C bus must be pulled up (as shown in the Figure 8) if the I^2C port is utilized. They may be left floating if no I^2C function is required. The logic reference generated by the bq50002 Analog Front End is 3 V, so care should be taken to ensure that if the Master I^2C device also has pull-up resistors to a higher reference, that the the 3-V reference to the bq500511 is not affected. Specifically, only one set of pull-up resistors should be populated, either on the I^2C Master bus or on the bq500511 system board, but not both.

Additional details on I^2C use and capabilities can be obtained by contacting TI.

8.2 Typical Application

The bq500511 controller, when paired with bq50002 integrated Analog Front End device, requires a minimum of external components to implement a WPC 1.2 Wireless Power Transmitter system.

As shown in the application schematic, external components are used to implement the following functions:

- Resonant tank circuit
- Demodulator input signal conditioning
- Human interface (LED and Buzzer)
- Current sensing
- Voltage sensing
- Temperature sensing
- System Configuration: Foreign Objection Detection (FOD) threshold and calibration, LED mode

Copyright © 2015, Texas Instruments Incorporated

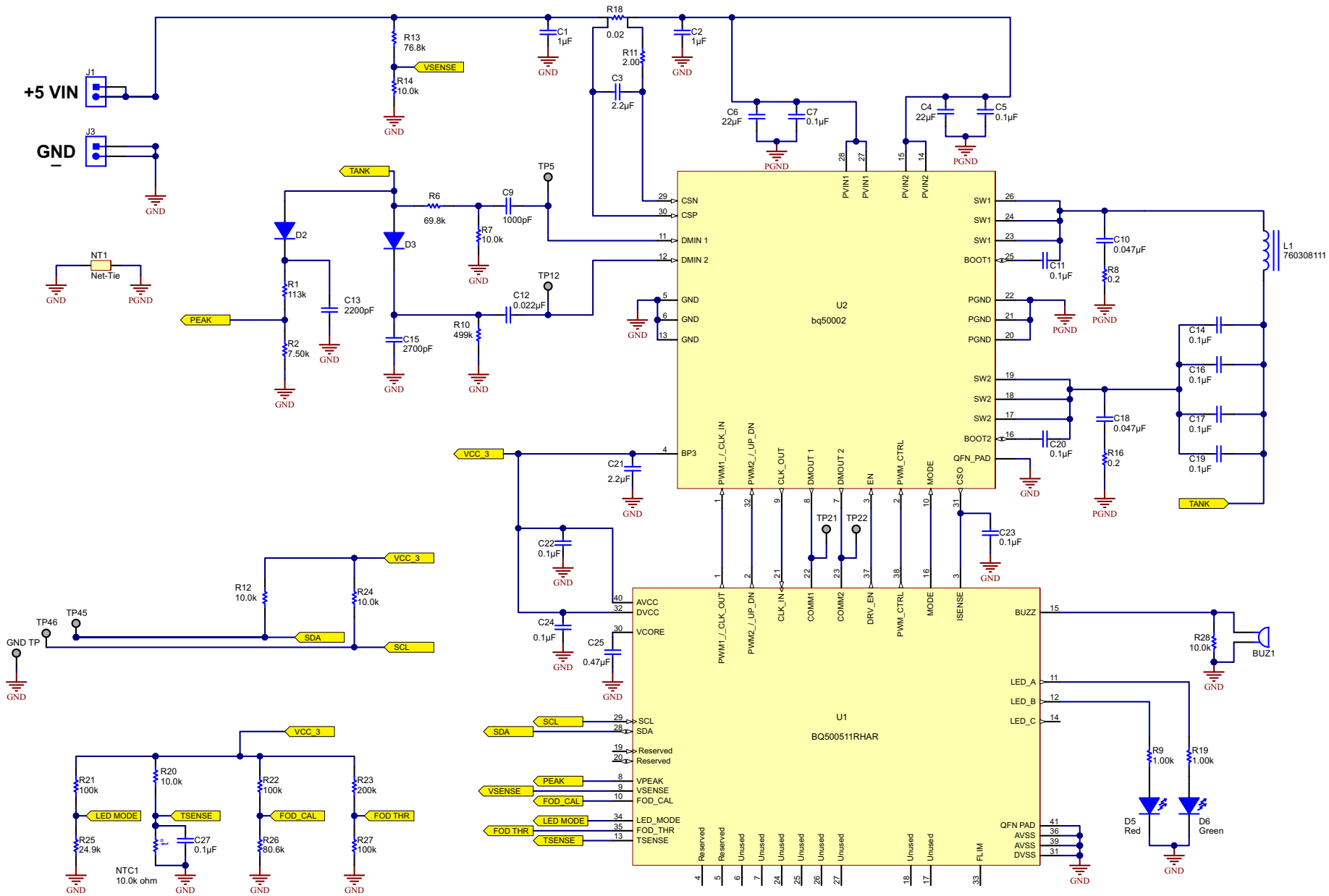

Figure 8. bq500511 Application Schematic

8.2.1 Design Requirements

DESIGN PARAMETER	VALUE
WPC coil type	A11

8.2.2 Detailed Design Procedure

8.2.2.1 Capacitor Selection

Capacitor selection is critical to proper system operation. The total capacitance value of 4 × 100 nF is required in the resonant tank. This is the WPC system compatibility requirement, not a guideline.

NOTE

A total capacitance value of 4 × 100 nF (C0G dielectric type, 50-V rating) is required in the resonant tank to achieve the correct resonance frequency. The capacitors chosen must be rated for at least 50 V and must be of a high-quality C0G dielectric (sometimes also called NP0). These are typically available in a 5% tolerance, which is adequate. TI does **not** recommend the use of X7R types or below if WPC compliance is required because critical WPC Certification Testing, such as the minimum modulation or guaranteed power test, might fail. The designer can combine capacitors to achieve the desired capacitance value. Various combinations can work depending on market availability. All capacitors must be of C0G types (not mixed with any other dielectric types).

8.2.2.2 Current Monitoring Requirements

The bq500511 is WPC v1.2 ready. To enable the FOD feature, current monitoring is provided in the bq50002 Analog Front End. For proper scaling of the current monitor signal, the current sense resistor should be 20 mΩ. For FOD accuracy, the current sense resistor must be a quality component with 0.5% tolerance, at least 1/4-W rating, and a temperature stability of ±200 PPM.

8.2.2.3 Input Voltage Monitoring

The VSENSE input is used to calculate power for the FOD function, and to detect the supply drooping when the bq500511 is receiving power from an insufficient adapter (for example from a weak USB port). The VSENSE input should reflect the input source voltage and should be scaled with a resistor divider comprising a 76.8 kΩ over 10 kΩ.

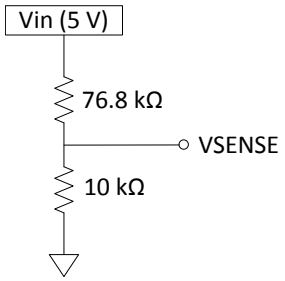

Figure 9. VSENSE Signal Conditioning

8.2.2.4 Tank Voltage Monitoring

The VPEAK input is used to estimate losses in the power components for the FOD function. The VPEAK input should reflect the envelope of the tank voltage (i.e. the node directly between the resonant capacitors and the primary coil) and should be buffered with a diode (100 V, 0.2 A) and scaled with a resistor divider comprising a 113 kΩ over 7.5 kΩ, with a 2200-pF filter capacitor.

Copyright © 2015, Texas Instruments Incorporated

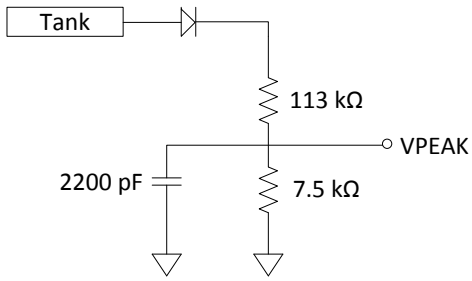

Figure 10. VPEAK Signal Conditioning

8.2.2.5 All Unused Pins

All unused pins can be left open unless otherwise indicated. Refer to the table in the *Pin Configuration and Functions* section. To improve PCB layout, ground unused pins, if it is an option.

8.2.2.6 Input Regulation

The bq500511 requires 3 VDC to operate. The regulator in the bq50002 provides this voltage rail eliminating the need for any external regulation.

8.2.2.7 System Input Power Requirements

The design works with 5-V input voltage to the bq50002. The WPC defined A11 TX type requires 5-V system voltage in order to deliver 5 W of output power from the receiver.

8.2.2.8 LED Modes

The bq500511 can directly drive three LED outputs (pin 11 (LED-A), pin 12 (LED-B), and pin 14 (LED-C)). Select one of the desired LED indication schemes through the voltage on LED_MODE (pin 34) by choosing appropriate values for the resistor divider.

8.2.3 Application Curves

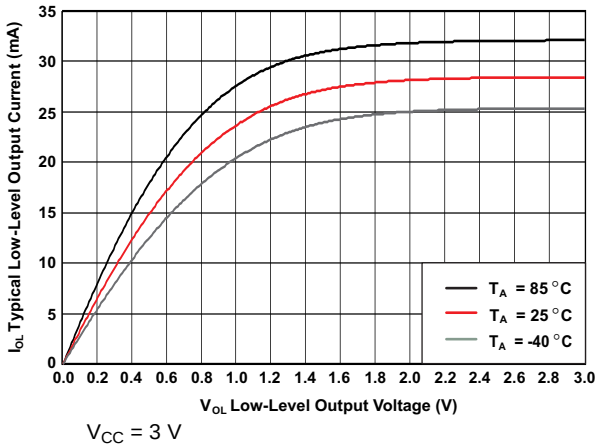

Figure 11. Typical Low-Level Output Current vs Low-Level Output Voltage

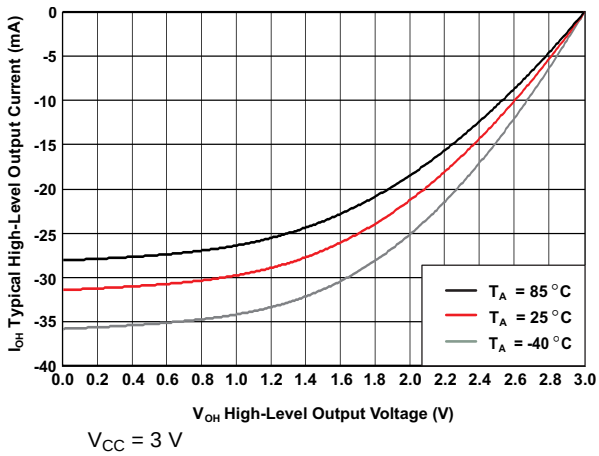

Figure 12. Typical High-Level Output Current vs High-Level Output Voltage

9 Power Supply Recommendations

The A11 TX type requires a 5-V system voltage.

10 Layout

10.1 Layout Guidelines

Careful PCB layout practice is critical to proper system operation. Many references are available on proper PCB layout techniques. A few good tips are as follows.

The TX layout requires a 4-layer PCB layout for best ground plane technique. A 2-layer PCB layout can be achieved though not as easily. Ideally, the approach to the layer stack-up is:

- Layer 1 component placement and as much ground plane as possible
- Layer 2 clean ground
- Layer 3 finish routing
- Layer 4 clean ground

Thus, the circuitry is virtually sandwiched between grounds. This minimizes EMI noise emissions and also provides a noise-free voltage reference plane for device operation.

Keep as much copper as possible. Make sure the bq500511 GND pins have a continuous flood connection to the ground plane. The power pad of the bq50002 should also be stitched to the ground plane, which also acts as a heat sink. A good GND reference is necessary for proper system operation, such as analog-digital conversion, clock stability, and best overall EMI performance. Separate the analog ground plane from the power ground plane and use only **one** tie point to connect grounds. Having several tie points defeats the purpose of separating the grounds. See the bq500511 EVM for an example of a good layout technique.

10.1.1 Layout Notes

Make sure the bypass capacitors intended for the bq500511 3.3-V supply are actually bypassing these supply pins (pin 32, DVCC, and pin 40, AVCC) to solid ground plane (see Figure 13). This means they need to be placed as close to the device as possible and the traces must be as wide as possible.

Make sure the bq500511 has a continuous flood connection to the ground plane (see Figure 14).

The full-bridge power stage that drives the TX coil is composed of two half-bridge power stages (integrated in bq50002) and resonant capacitors. Inputs bypass capacitors should be placed as close as possible to the bq50002 PVIN1 pins (pin 27, 28) and PVIN2 pins (pin 14, 15). The input and ground pours and traces should be made as wide as possible for better current flow. The trace to the coil and resonant capacitors should also be made as wide as possible (see Figure 15).

To ensure proper operation, grounds conducting a large amount of current and switching noise must be isolated from low current, quiet grounds. Separate the ground pours for the power stages and the bq500511 IC. Connect all grounds to a single point at the main ground terminal (see Figure 16).

Proper current sensing layout technique is very important, as it directly affects the FOD and PMOD performance. When sampling the very-low voltages generated across a current sense resistor, be sure to use the so called 4-wire or Kelvin-connection technique. This is important to avoid introducing false voltage drops from adjacent pads and copper power routes. It is a common power-supply layout technique. Some high-accuracy sense resistors have dedicated sense pins (see Figure 17).

The trace from bq50002 CSP pin to sense resistor must be minimized to avoid unwanted offset in the application. This trace should be limited to less than 20-mΩ resistance.

Copyright © 2015, Texas Instruments Incorporated

10.2 Layout Examples

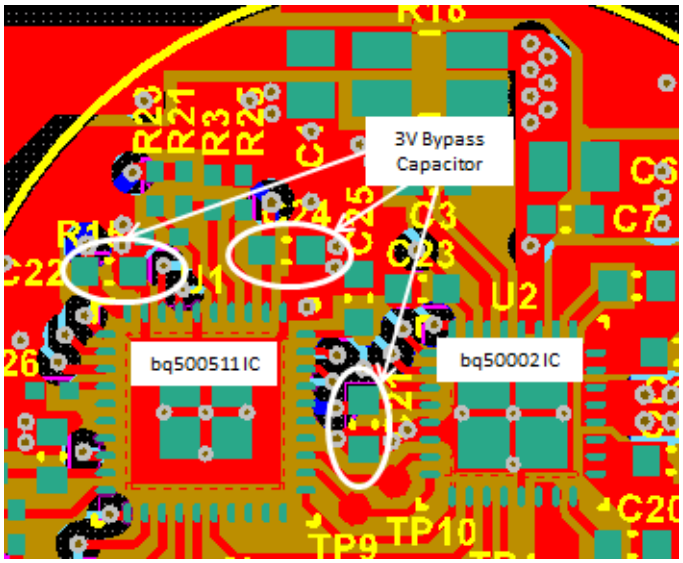

Figure 13. Bypass Capacitors Layout

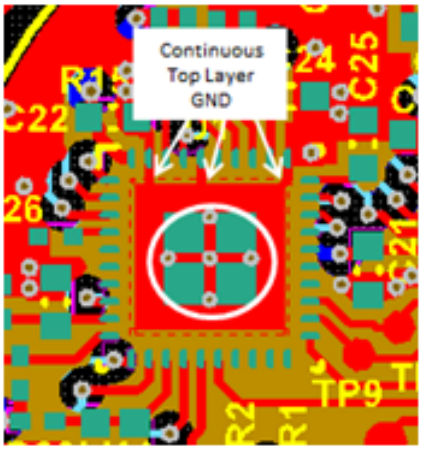

Figure 14. Continuous GND Layout

Layout Examples (continued)

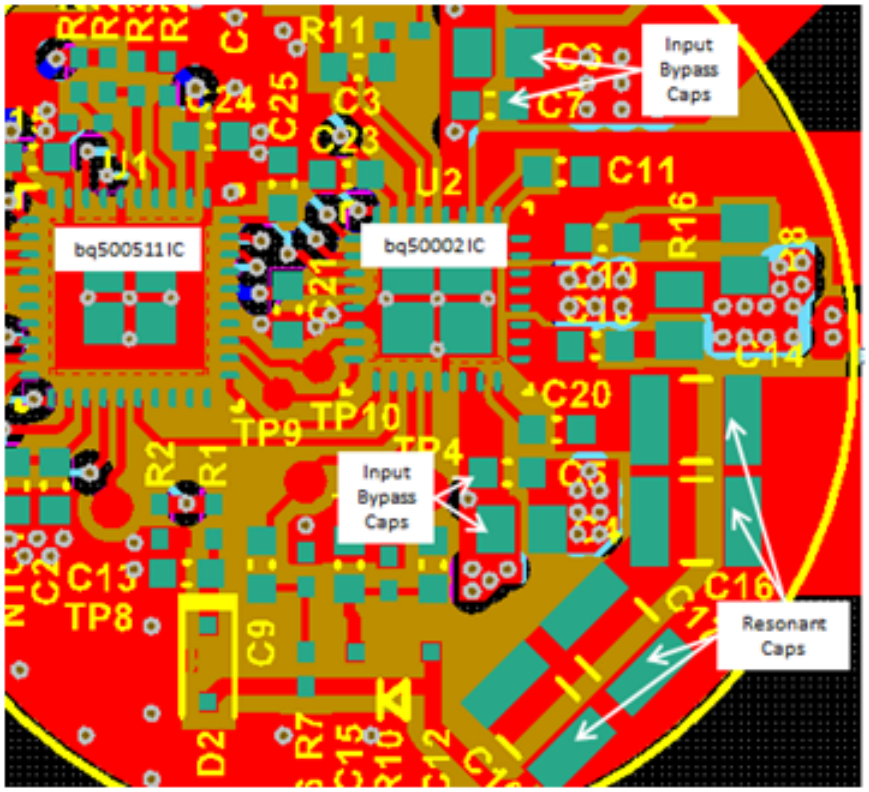

Figure 15. Ground Layout

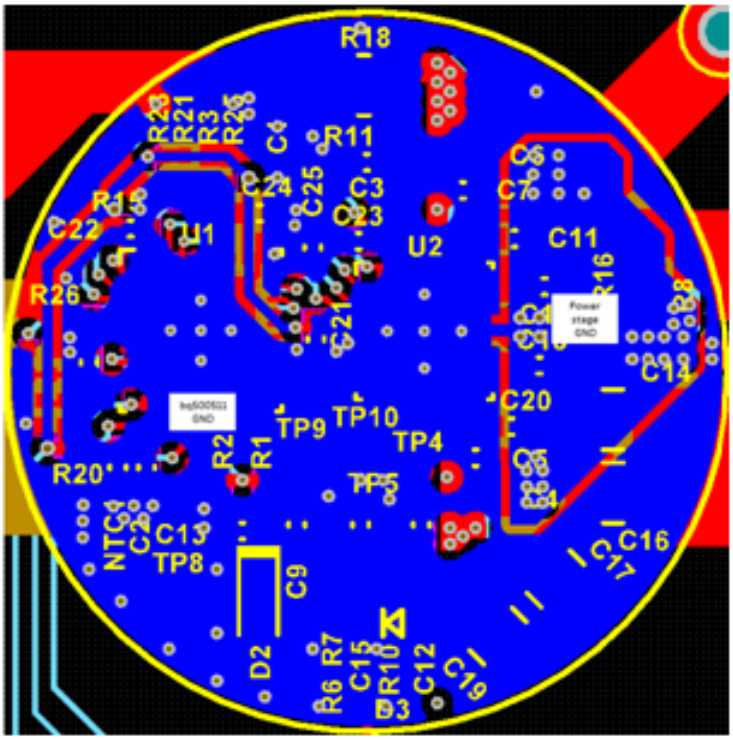

Figure 16. Ground Layout

Copyright © 2015, Texas Instruments Incorporated

Layout Examples (continued)

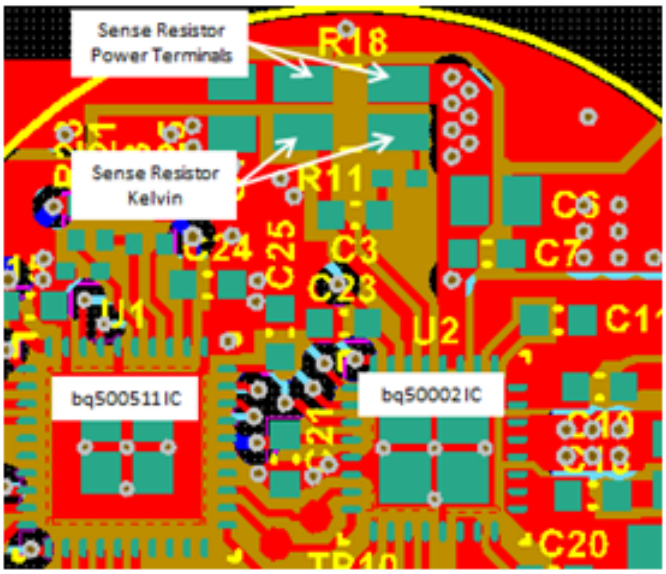

Figure 17. Current Sensing Layout

11 Device and Documentation Support

11.1 Device Support

11.1.1 Third-Party Products Disclaimer

TI'S PUBLICATION OF INFORMATION REGARDING THIRD-PARTY PRODUCTS OR SERVICES DOES NOT CONSTITUTE AN ENDORSEMENT REGARDING THE SUITABILITY OF SUCH PRODUCTS OR SERVICES OR A WARRANTY, REPRESENTATION OR ENDORSEMENT OF SUCH PRODUCTS OR SERVICES, EITHER ALONE OR IN COMBINATION WITH ANY TI PRODUCT OR SERVICE.

11.2 Documentation Support

11.2.1 Related Documentation

1. Technology, *Wireless Power Consortium*, www.wirelesspowerconsortium.com
2. Analog applications journal, *An Introduction to the Wireless Power Consortium Standard and TI's Compliant Solutions*, Johns, Bill, SLYT401
3. Data sheet, *Integrated Wireless Power Supply Receiver, Qi (WPC) Compliant, bq51011, bq51013*, SLVSAT9
4. Application note, *Building a Wireless Power Transmitter*, SLUA635
5. Application note, *bqTESLA Transmitter Coil Vendors*, SLUA649
6. User's Guide, *bq50002 and bq500511 Wireless Power TX EVM*, SLVUAJ7

11.3 Community Resources

The following links connect to TI community resources. Linked contents are provided "AS IS" by the respective contributors. They do not constitute TI specifications and do not necessarily reflect TI's views; see TI's Terms of Use.

TI E2E™ Online Community ***TI's Engineer-to-Engineer (E2E) Community.*** Created to foster collaboration among engineers. At e2e.ti.com, you can ask questions, share knowledge, explore ideas and help solve problems with fellow engineers.

Design Support ***TI's Design Support*** Quickly find helpful E2E forums along with design support tools and contact information for technical support.

11.4 Trademarks

Dynamic Power Limiting (DPL), E2E are trademarks of Texas Instruments.
All other trademarks are the property of their respective owners.

11.5 Electrostatic Discharge Caution

These devices have limited built-in ESD protection. The leads should be shorted together or the device placed in conductive foam during storage or handling to prevent electrostatic damage to the MOS gates.

11.6 Glossary

SLYZ022 — *TI Glossary*.

This glossary lists and explains terms, acronyms, and definitions.

12 Mechanical, Packaging, and Orderable Information

The following pages include mechanical, packaging, and orderable information. This information is the most current data available for the designated devices. This data is subject to change without notice and revision of this document. For browser-based versions of this data sheet, refer to the left-hand navigation.

Copyright © 2015, Texas Instruments Incorporated

PACKAGING INFORMATION

Orderable part number	Status (1)	Material type (2)	Package | Pins	Package qty | Carrier	RoHS (3)	Lead finish/ Ball material (4)	MSL rating/ Peak reflow (5)	Op temp (°C)	Part marking (6)
BQ500511RHAR	NRND	Production	VQFN (RHA) | 40	2500 | LARGE T&R	Yes	NIPDAU	Level-3-260C-168 HR	-40 to 85	BQ500511
BQ500511RHAR.A	NRND	Production	VQFN (RHA) | 40	2500 | LARGE T&R	Yes	NIPDAU	Level-3-260C-168 HR	-40 to 85	BQ500511
BQ500511RHAT	NRND	Production	VQFN (RHA) | 40	250 | SMALL T&R	Yes	NIPDAU	Level-3-260C-168 HR	-40 to 85	BQ500511
BQ500511RHAT.A	NRND	Production	VQFN (RHA) | 40	250 | SMALL T&R	Yes	NIPDAU	Level-3-260C-168 HR	-40 to 85	BQ500511

(1) **Status:** For more details on status, see our product life cycle.

(2) **Material type:** When designated, preproduction parts are prototypes/experimental devices, and are not yet approved or released for full production. Testing and final process, including without limitation quality assurance, reliability performance testing, and/or process qualification, may not yet be complete, and this item is subject to further changes or possible discontinuation. If available for ordering, purchases will be subject to an additional waiver at checkout, and are intended for early internal evaluation purposes only. These items are sold without warranties of any kind.

(3) **RoHS values:** Yes, No, RoHS Exempt. See the TI RoHS Statement for additional information and value definition.

(4) **Lead finish/Ball material:** Parts may have multiple material finish options. Finish options are separated by a vertical ruled line. Lead finish/Ball material values may wrap to two lines if the finish value exceeds the maximum column width.

(5) **MSL rating/Peak reflow:** The moisture sensitivity level ratings and peak solder (reflow) temperatures. In the event that a part has multiple moisture sensitivity ratings, only the lowest level per JEDEC standards is shown. Refer to the shipping label for the actual reflow temperature that will be used to mount the part to the printed circuit board.

(6) **Part marking:** There may be an additional marking, which relates to the logo, the lot trace code information, or the environmental category of the part.

Multiple part markings will be inside parentheses. Only one part marking contained in parentheses and separated by a "~" will appear on a part. If a line is indented then it is a continuation of the previous line and the two combined represent the entire part marking for that device.

Important Information and Disclaimer: The information provided on this page represents TI's knowledge and belief as of the date that it is provided. TI bases its knowledge and belief on information provided by third parties, and makes no representation or warranty as to the accuracy of such information. Efforts are underway to better integrate information from third parties. TI has taken and continues to take reasonable steps to provide representative and accurate information but may not have conducted destructive testing or chemical analysis on incoming materials and chemicals. TI and TI suppliers consider certain information to be proprietary, and thus CAS numbers and other limited information may not be available for release.

In no event shall TI's liability arising out of such information exceed the total purchase price of the TI part(s) at issue in this document sold by TI to Customer on an annual basis.

TAPE AND REEL INFORMATION

REEL DIMENSIONS

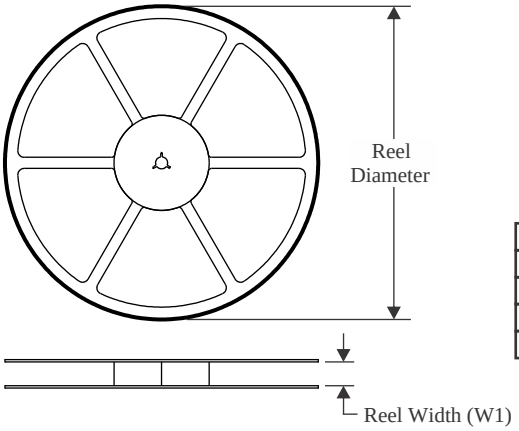

TAPE DIMENSIONS

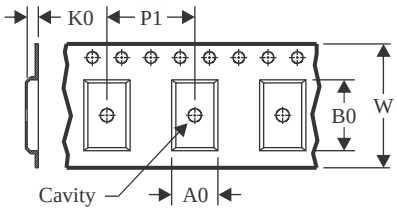

A0	Dimension designed to accommodate the component width
B0	Dimension designed to accommodate the component length
K0	Dimension designed to accommodate the component thickness
W	Overall width of the carrier tape
P1	Pitch between successive cavity centers

QUADRANT ASSIGNMENTS FOR PIN 1 ORIENTATION IN TAPE

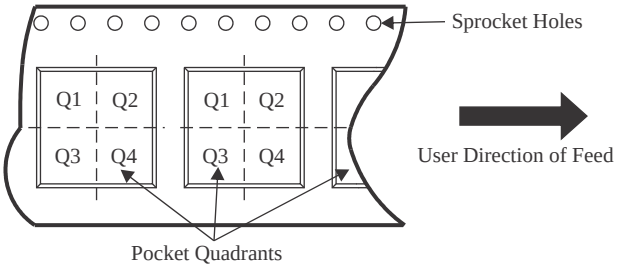

*All dimensions are nominal

Device	Package Type	Package Drawing	Pins	SPQ	Reel Diameter (mm)	Reel Width W1 (mm)	A0 (mm)	B0 (mm)	K0 (mm)	P1 (mm)	W (mm)	Pin1 Quadrant
BQ500511RHAR	VQFN	RHA	40	2500	330.0	16.4	6.3	6.3	1.1	12.0	16.0	Q2
BQ500511RHAT	VQFN	RHA	40	250	180.0	16.4	6.3	6.3	1.1	12.0	16.0	Q2

TAPE AND REEL BOX DIMENSIONS

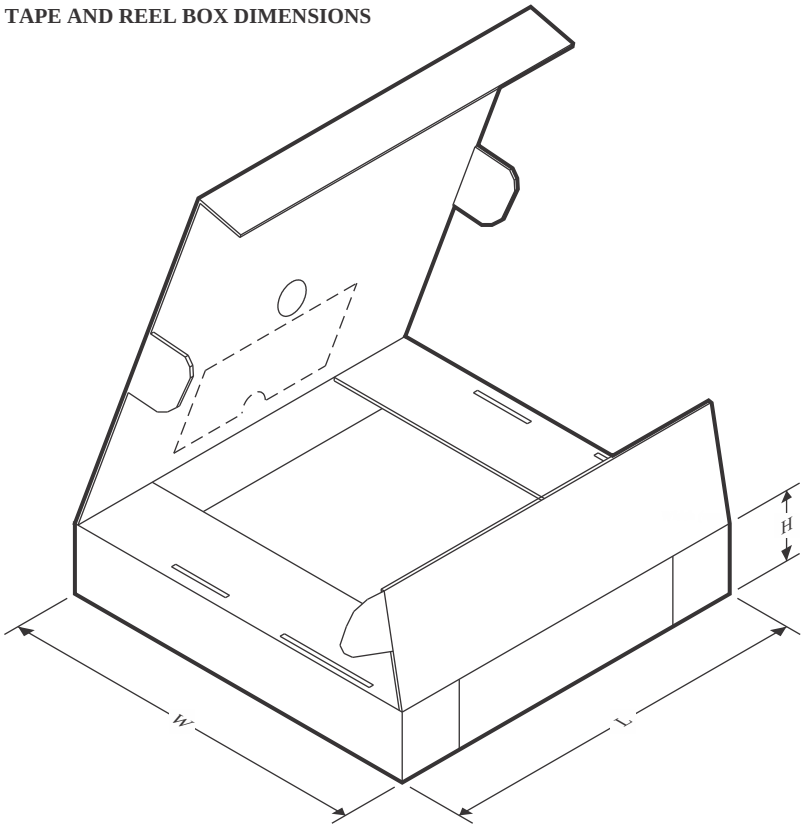

*All dimensions are nominal

Device	Package Type	Package Drawing	Pins	SPQ	Length (mm)	Width (mm)	Height (mm)
BQ500511RHAR	VQFN	RHA	40	2500	353.0	353.0	32.0
BQ500511RHAT	VQFN	RHA	40	250	213.0	191.0	35.0

GENERIC PACKAGE VIEW

RHA 40

VQFN - 1 mm max height

6 x 6, 0.5 mm pitch

PLASTIC QUAD FLATPACK - NO LEAD

This image is a representation of the package family, actual package may vary.
Refer to the product data sheet for package details.

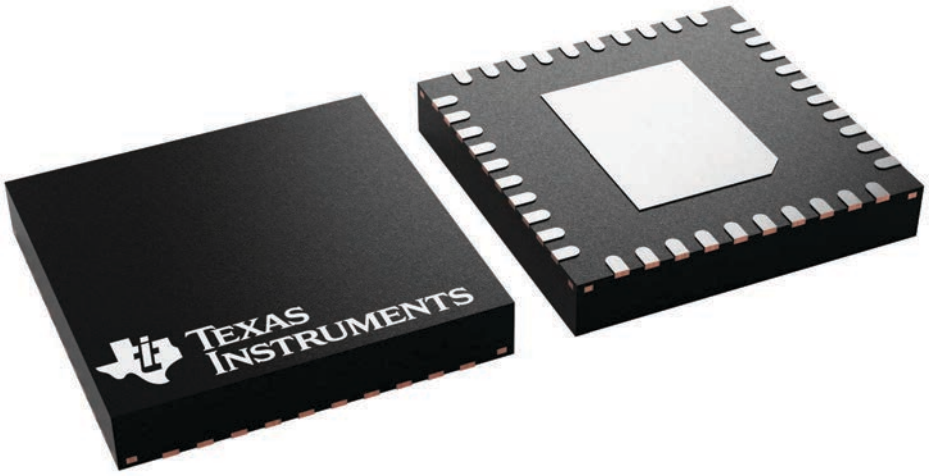

4225870/A

PACKAGE OUTLINE

RHA0040D

VQFN - 1 mm max height

PLASTIC QUAD FLATPACK - NO LEAD

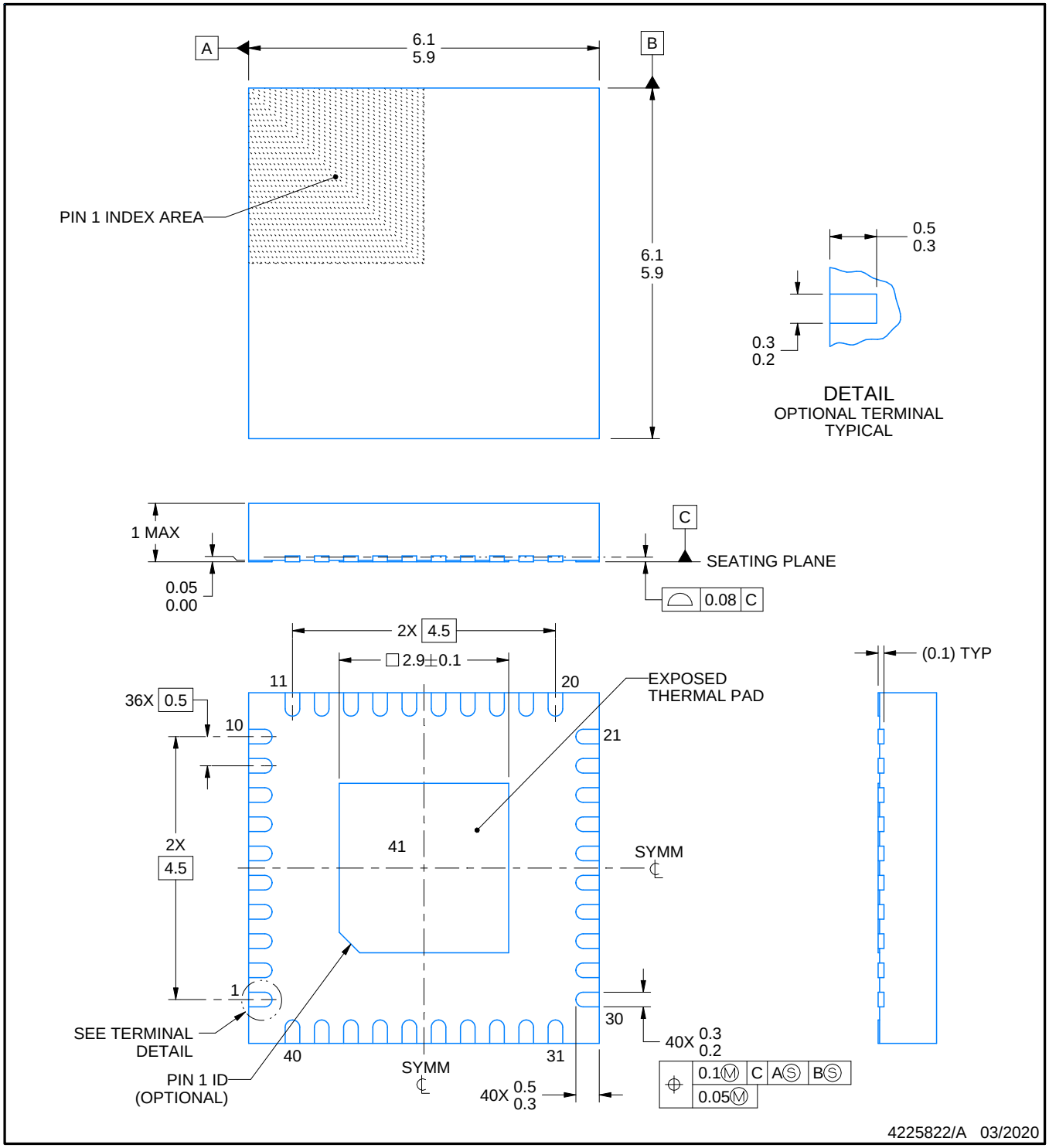

NOTES:

1. All linear dimensions are in millimeters. Any dimensions in parenthesis are for reference only. Dimensioning and tolerancing per ASME Y14.5M.
2. This drawing is subject to change without notice.
3. The package thermal pad must be soldered to the printed circuit board for thermal and mechanical performance.

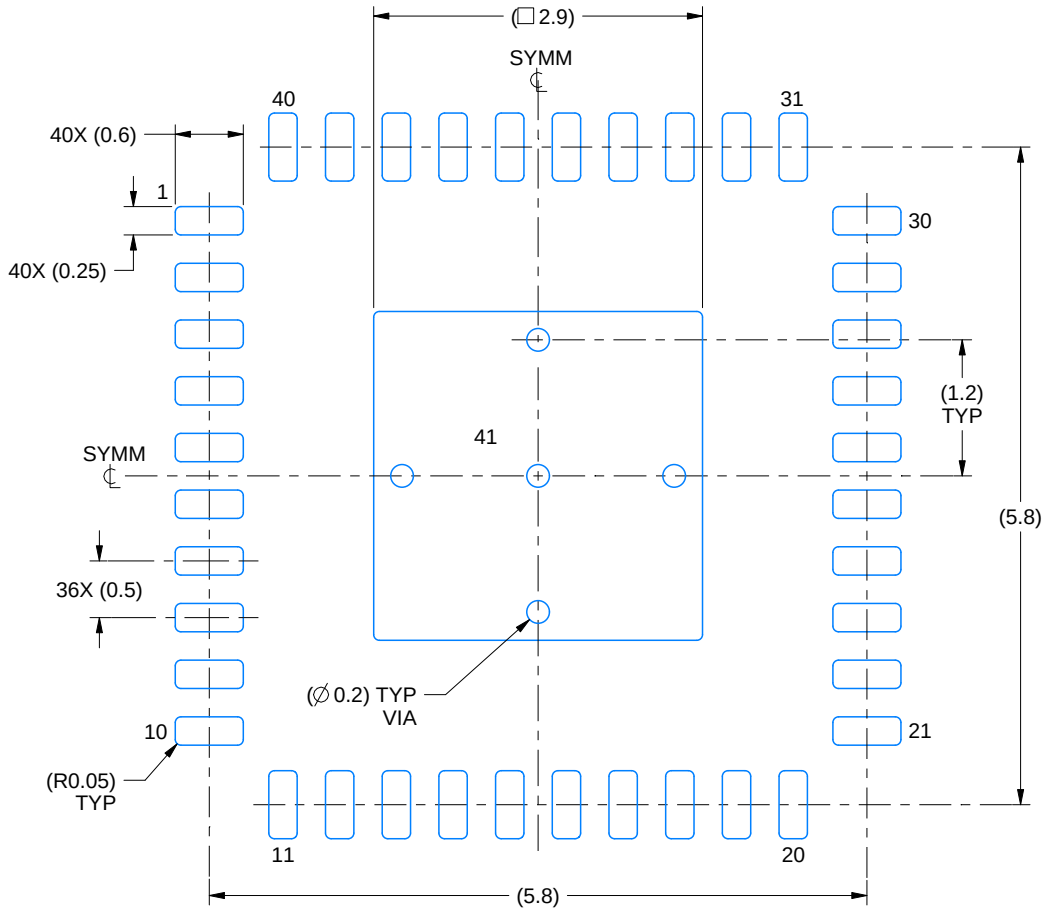

LAND PATTERN EXAMPLE
SCALE:15X

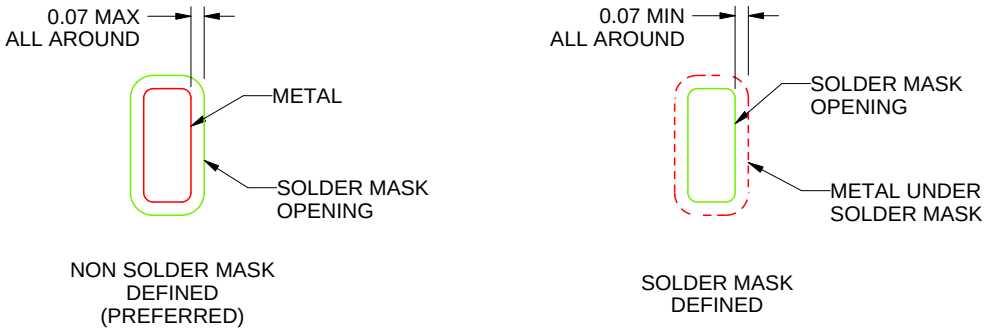

SOLDER MASK DETAILS

4225822/A 03/2020

NOTES: (continued)

4. This package is designed to be soldered to a thermal pad on the board. For more information, see Texas Instruments literature number SLUA271 (www.ti.com/lit/slua271).
5. Vias are optional depending on application, refer to device data sheet. If any vias are implemented, refer to their locations shown on this view.

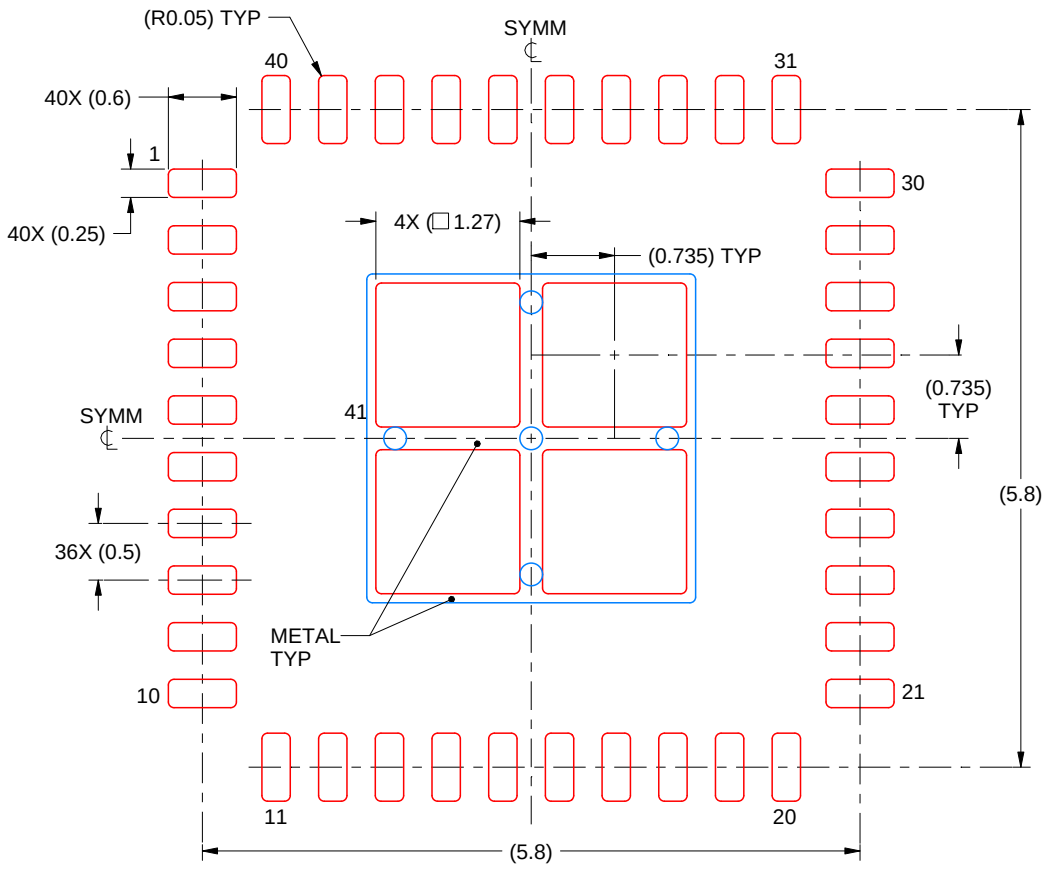

SOLDER PASTE EXAMPLE
BASED ON 0.125 mm THICK STENCIL

EXPOSED PAD 41:
76.46% PRINTED SOLDER COVERAGE BY AREA UNDER PACKAGE
SCALE:15X

4225822/A 03/2020

NOTES: (continued)

6. Laser cutting apertures with trapezoidal walls and rounded corners may offer better paste release. IPC-7525 may have alternate design recommendations.

IMPORTANT NOTICE AND DISCLAIMER

TI PROVIDES TECHNICAL AND RELIABILITY DATA (INCLUDING DATASHEETS), DESIGN RESOURCES (INCLUDING REFERENCE DESIGNS), APPLICATION OR OTHER DESIGN ADVICE, WEB TOOLS, SAFETY INFORMATION, AND OTHER RESOURCES “AS IS” AND WITH ALL FAULTS, AND DISCLAIMS ALL WARRANTIES, EXPRESS AND IMPLIED, INCLUDING WITHOUT LIMITATION ANY IMPLIED WARRANTIES OF MERCHANTABILITY, FITNESS FOR A PARTICULAR PURPOSE OR NON-INFRINGEMENT OF THIRD PARTY INTELLECTUAL PROPERTY RIGHTS.

These resources are intended for skilled developers designing with TI products. You are solely responsible for (1) selecting the appropriate TI products for your application, (2) designing, validating and testing your application, and (3) ensuring your application meets applicable standards, and any other safety, security, regulatory or other requirements.

These resources are subject to change without notice. TI grants you permission to use these resources only for development of an application that uses the TI products described in the resource. Other reproduction and display of these resources is prohibited. No license is granted to any other TI intellectual property right or to any third party intellectual property right. TI disclaims responsibility for, and you fully indemnify TI and its representatives against any claims, damages, costs, losses, and liabilities arising out of your use of these resources.

TI’s products are provided subject to TI’s Terms of Sale, TI’s General Quality Guidelines, or other applicable terms available either on ti.com or provided in conjunction with such TI products. TI’s provision of these resources does not expand or otherwise alter TI’s applicable warranties or warranty disclaimers for TI products. Unless TI explicitly designates a product as custom or customer-specified, TI products are standard, catalog, general purpose devices.

TI objects to and rejects any additional or different terms you may propose.

Copyright © 2026, Texas Instruments Incorporated

Last updated 10/2025