BZX84WCx-Q1 Zener Voltage Regulator Diodes in SC-70

1 Features

- Total power dissipation: 360mW (max)
- Tolerance: ±5%
- Temperature range: -55°C to +150°C
- AEC-Q101 qualified
- Leaded package used for automatic optical inspection (AOI)

2 Applications

- Voltage regulation
- Over-voltage protection

3 Description

The BZX84WCx-Q1 is a family of voltage regulating diodes in a SC-70 package. The diodes are available in Zener voltages ranging from 5.6V to 39V.

Package Information

PART NUMBER	PACKAGE (1)	PACKAGE SIZE (2)
BZX84WCx-Q1	DCK (SC-70, 3)	2.00mm × 2.10mm

(1) For more information, see Section 9.
(2) The package size (length × width) is a nominal value and includes pins, where applicable.



Functional Block Diagram

An IMPORTANT NOTICE at the end of this data sheet addresses availability, warranty, changes, use in safety-critical applications, intellectual property matters and other important disclaimers. PRODUCTION DATA.

Table of Contents

1 Features....1
2 Applications....1
3 Description....1
4 Related Products....3
5 Pin Configuration and Functions....3
6 Specifications....4
6.1 Absolute Maximum Ratings....4
6.2 Recommended Operating Conditions....4
6.3 Thermal Information....4
6.4 Electrical Characteristics....5
6.5 Typical Characteristics....6
7 Device and Documentation Support....7
7.1 Documentation Support....7
7.2 Receiving Notification of Documentation Updates....7
7.3 Support Resources....7
7.4 Trademarks....7
7.5 Electrostatic Discharge Caution....7
7.6 Glossary....7
8 Revision History....8
9 Mechanical, Packaging, and Orderable Information....8

Copyright © 2026 Texas Instruments Incorporated

4 Related Products

ZENER FAMILY	POWER DISSIPATION	PACKAGE
BZX84Cx / BZX84Cx-Q1	430mW	SOT-23
BZX84WCx / BZX84WCx-Q1	360mW	SC-70
BZX884Cx / BZX884Cx-Q1	250mW	DFN1006
SZMM3Zx (1) / SZMM3Zx-Q1 (1)	300mW	SOD323
SZMM5Zx (1) / SZMM5Zx-Q1 (1)	290mW	SOD523

(1) Preview Information (not Production Data)

5 Pin Configuration and Functions

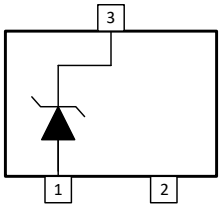

Figure 5-1. DCK Package, 3-Pin SC-70 (Top View)

Table 5-1. Pin Functions

PIN		DESCRIPTION
NO.	NAME	
1	A	Anode
2	NC	No Connect
3	K	Cathode

Copyright © 2026 Texas Instruments Incorporated

6 Specifications

6.1 Absolute Maximum Ratings

over operating free-air temperature range (unless otherwise noted) (1)

		MIN	MAX	UNIT
P_D (2) (3)	Total Power Dissipation		360	mW
T_A	Ambient Operating Temperature	-55	150	°C
T_{stg}	Storage Temperature	-65	155	°C

(1) Operation outside the Absolute Maximum Ratings may cause permanent device damage. Absolute maximum ratings do not imply functional operation of the device at these or any other conditions beyond those listed under Recommended Operating Conditions. If briefly operating outside the Recommended Operating Conditions but within the Absolute Maximum Ratings, the device may not sustain damage, but it may not be fully functional. Operating the device in this manner may affect device reliability, functionality, performance, and shorten the device lifetime.
(2) FR-4 printed circuit board, single sided copper, standard footprint
(3) Measured at 25℃

6.2 Recommended Operating Conditions

over operating free-air temperature range (unless otherwise noted)

			MIN	NOM	MAX	UNIT
V_F	Forward Voltage	I_F = 10 mA			0.9	V
T_A	Operating free-air temperature		-55		150	°C

6.3 Thermal Information

THERMAL METRIC (1)		BZX84WCx-Q1 DCK (SC-70) 3 PINS	UNIT
$R_{\theta JA}$	Junction-to-ambient thermal resistance	345.0	°C/W
$R_{\theta JC(top)}$	Junction-to-case (top) thermal resistance	223.0	°C/W
$R_{\theta JB}$	Junction-to-board thermal resistance	159.0	°C/W
Ψ_{JT}	Junction-to-top characterization parameter	113.6	°C/W
Ψ_{JB}	Junction-to-board characterization parameter	157.9	°C/W
$R_{\theta JC(bot)}$	Junction-to-case (bottom) thermal resistance	N/A	°C/W

(1) For more information about traditional and new thermal metrics, see the *Semiconductor and IC Package Thermal Metrics* application note.

Copyright © 2026 Texas Instruments Incorporated

6.4 Electrical Characteristics

At T_A = 25°C (unless otherwise noted)

Part Number	Zener Voltage V_Z (V) at I_Z				Zener Impedance Z_{ZT} (Ω) at I_Z		Reverse Leakage Current I_R (µA)		Temperature Coefficient S_Z (mV/C) at I_Z		Capacitance C_D (pF) (1)
	MIN	TYP	MAX	I_Z (mA)	MAX	I_Z (mA)	MAX	V_R (V)	MAX	I_Z (mA)	MAX
BZX84WC5V6-Q1	5.2	5.6	6	5	40	5	0.75	2	2.5	5	200
BZX84WC6V8-Q1	6.4	6.8	7.2	5	15	5	0.1	4	4.5	5	120
BZX84WC8V2-Q1	7.79	8.2	8.61	5	15	5	0.6	5.75	6.2	5	80
BZX84WC9V1-Q1	8.5	9.1	9.6	5	15	5	0.2	6	8	5	90
BZX84WC15V-Q1	14.25	15	15.75	5	30	5	0.03	10.5	13	5	50
BZX84WC16V-Q1	15.3	16	17.1	5	40	5	0.03	11.2	15.5	5	50
BZX84WC18V-Q1	16.8	18	19.1	5	45	5	0.03	12.6	19	5	45
BZX84WC27V-Q1	25.65	27	28.35	2	80	2	0.03	18.9	25.3	2	35
BZX84WC33V-Q1	31	33	35	2	90	2	0.03	23.1	37.5	2	30
BZX84WC39V-Q1	37.05	39	40.95	2	130	2	0.03	27.3	41.2	2	25

(1) f = 1MHz, V_R = 0

Copyright © 2026 Texas Instruments Incorporated

6.5 Typical Characteristics

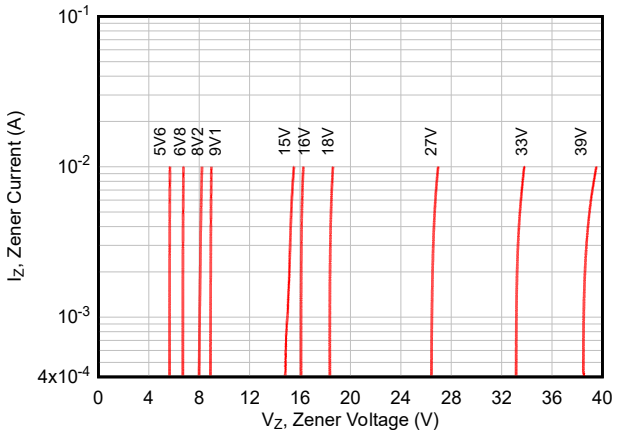

Figure 6-1. Zener Current vs Zener Voltage

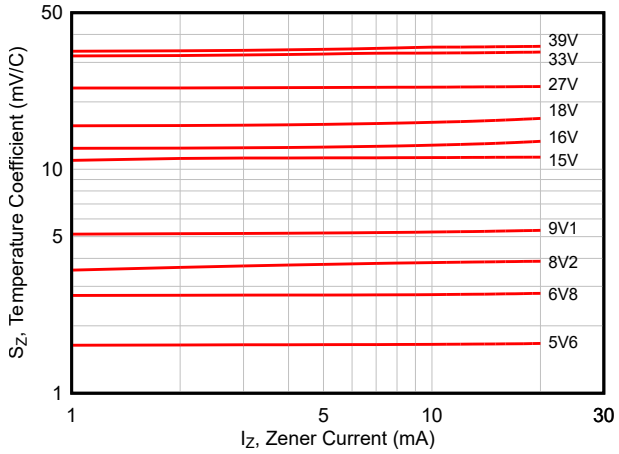

Figure 6-2. Temperature Coefficient

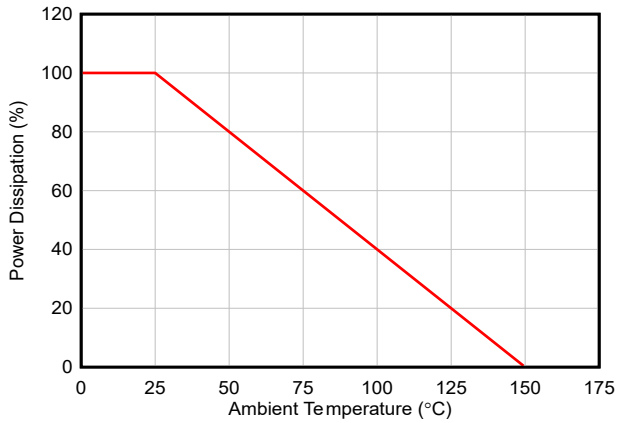

Figure 6-3. Power Derating Curve

Copyright © 2026 Texas Instruments Incorporated

7 Device and Documentation Support

7.1 Documentation Support

7.1.1 Related Documentation

For related documentation, see the following:

- Texas Instruments, *Diodes Packaging and Layout Guide*
- Texas Instruments, *Diodes Layout Guide User's Guide*
- Texas Instruments, *Generic Evaluation Module User's Guide*
- Texas Instruments, *Why Use TI Zener Diodes for High Power Applications*
- Texas Instruments, *Low Noise Zeners*

7.2 Receiving Notification of Documentation Updates

To receive notification of documentation updates, navigate to the device product folder on ti.com. Click on *Notifications* to register and receive a weekly digest of any product information that has changed. For change details, review the revision history included in any revised document.

7.3 Support Resources

TI E2E™ support forums are an engineer's go-to source for fast, verified answers and design help — straight from the experts. Search existing answers or ask your own question to get the quick design help you need.

Linked content is provided "AS IS" by the respective contributors. They do not constitute TI specifications and do not necessarily reflect TI's views; see TI's Terms of Use.

7.4 Trademarks

TI E2E™ is a trademark of Texas Instruments.
All trademarks are the property of their respective owners.

7.5 Electrostatic Discharge Caution



This integrated circuit can be damaged by ESD. Texas Instruments recommends that all integrated circuits be handled with appropriate precautions. Failure to observe proper handling and installation procedures can cause damage.

ESD damage can range from subtle performance degradation to complete device failure. Precision integrated circuits may be more susceptible to damage because very small parametric changes could cause the device not to meet its published specifications.

7.6 Glossary

TI Glossary	This glossary lists and explains terms, acronyms, and definitions.

Copyright © 2026 Texas Instruments Incorporated

8 Revision History

NOTE: Page numbers for previous revisions may differ from page numbers in the current version.

Changes from Revision B (December 2025) to Revision C (March 2026) **Page**

- Added BZX84WC33V-Q1 to datasheet..... 1

Changes from Revision A (April 2025) to Revision B (December 2025) **Page**

- Added BZX84WC5V6-Q1, BZX84WC6V8-Q1, BZX84WC9V1-Q1, BZX84WC16V-Q1, and BZX84WC18V-Q1 devices.....1

Changes from Revision * (January 2025) to Revision A (April 2025) **Page**

- Added BZX84WC15V-Q1 and BZX84WC39V-Q1 devices.....1

DATE	REVISION	NOTES
January 2025	*	Initial Release

9 Mechanical, Packaging, and Orderable Information

The following pages include mechanical, packaging, and orderable information. This information is the most current data available for the designated devices. This data is subject to change without notice and revision of this document. For browser-based versions of this data sheet, refer to the left-hand navigation.

Copyright © 2026 Texas Instruments Incorporated

PACKAGING INFORMATION

Orderable part number	Status (1)	Material type (2)	Package | Pins	Package qty | Carrier	RoHS (3)	Lead finish/ Ball material (4)	MSL rating/ Peak reflow (5)	Op temp (°C)	Part marking (6)
BZX84WC15VDCKRQ1	Active	Production	SC70 (DCK) | 3	3000 | LARGE T&R	Yes	SN	Level-1-260C-UNLIM	-55 to 150	1UH
BZX84WC16VDCKRQ1	Active	Production	SC70 (DCK) | 3	3000 | LARGE T&R	Yes	SN	Level-1-260C-UNLIM	-	1ZN
BZX84WC18VDCKRQ1	Active	Production	SC70 (DCK) | 3	3000 | LARGE T&R	Yes	SN	Level-1-260C-UNLIM	-	1ZO
BZX84WC27VDCKRQ1	Active	Production	SC70 (DCK) | 3	3000 | LARGE T&R	Yes	SN	Level-1-260C-UNLIM	-55 to 150	1UI
BZX84WC27VDCKRQ1.B	Active	Production	SC70 (DCK) | 3	3000 | LARGE T&R	Yes	SN	Level-1-260C-UNLIM	See BZX84WC27VDCKRQ1	1UI
BZX84WC33VDCKRQ1	Active	Production	SC70 (DCK) | 3	3000 | LARGE T&R	Yes	SN	Level-1-260C-UNLIM	-55 to 150	24B
BZX84WC39VDCKRQ1	Active	Production	SC70 (DCK) | 3	3000 | LARGE T&R	Yes	SN	Level-1-260C-UNLIM	-55 to 150	1T7
BZX84WC39VDCKRQ1.B	Active	Production	SC70 (DCK) | 3	3000 | LARGE T&R	Yes	SN	Level-1-260C-UNLIM	See BZX84WC39VDCKRQ1	1T7
BZX84WC5V6DCKRQ1	Active	Production	SC70 (DCK) | 3	3000 | LARGE T&R	Yes	SN	Level-1-260C-UNLIM	-	1ZP
BZX84WC6V8DCKRQ1	Active	Production	SC70 (DCK) | 3	3000 | LARGE T&R	Yes	SN	Level-1-260C-UNLIM	-	1ZR
BZX84WC8V2DCKRQ1	Active	Production	SC70 (DCK) | 3	3000 | LARGE T&R	Yes	SN	Level-1-260C-UNLIM	-55 to 150	1T5
BZX84WC8V2DCKRQ1.B	Active	Production	SC70 (DCK) | 3	3000 | LARGE T&R	Yes	SN	Level-1-260C-UNLIM	See BZX84WC8V2DCKRQ1	1T5
BZX84WC9V1DCKRQ1	Active	Production	SC70 (DCK) | 3	3000 | LARGE T&R	Yes	SN	Level-1-260C-UNLIM	-	1ZQ

(1) **Status:** For more details on status, see our product life cycle.

(2) **Material type:** When designated, preproduction parts are prototypes/experimental devices, and are not yet approved or released for full production. Testing and final process, including without limitation quality assurance, reliability performance testing, and/or process qualification, may not yet be complete, and this item is subject to further changes or possible discontinuation. If available for ordering, purchases will be subject to an additional waiver at checkout, and are intended for early internal evaluation purposes only. These items are sold without warranties of any kind.

(3) **RoHS values:** Yes, No, RoHS Exempt. See the TI RoHS Statement for additional information and value definition.

(4) **Lead finish/Ball material:** Parts may have multiple material finish options. Finish options are separated by a vertical ruled line. Lead finish/Ball material values may wrap to two lines if the finish value exceeds the maximum column width.

(5) **MSL rating/Peak reflow:** The moisture sensitivity level ratings and peak solder (reflow) temperatures. In the event that a part has multiple moisture sensitivity ratings, only the lowest level per JEDEC standards is shown. Refer to the shipping label for the actual reflow temperature that will be used to mount the part to the printed circuit board.

(6) **Part marking:** There may be an additional marking, which relates to the logo, the lot trace code information, or the environmental category of the part.

Multiple part markings will be inside parentheses. Only one part marking contained in parentheses and separated by a "~" will appear on a part. If a line is indented then it is a continuation of the previous line and the two combined represent the entire part marking for that device.

Important Information and Disclaimer: The information provided on this page represents TI's knowledge and belief as of the date that it is provided. TI bases its knowledge and belief on information provided by third parties, and makes no representation or warranty as to the accuracy of such information. Efforts are underway to better integrate information from third parties. TI has taken and continues to take reasonable steps to provide representative and accurate information but may not have conducted destructive testing or chemical analysis on incoming materials and chemicals. TI and TI suppliers consider certain information to be proprietary, and thus CAS numbers and other limited information may not be available for release.

In no event shall TI's liability arising out of such information exceed the total purchase price of the TI part(s) at issue in this document sold by TI to Customer on an annual basis.

OTHER QUALIFIED VERSIONS OF BZX84WC15V-Q1, BZX84WC16V-Q1, BZX84WC18V-Q1, BZX84WC27V-Q1, BZX84WC33V-Q1, BZX84WC39V-Q1, BZX84WC5V6-Q1, BZX84WC6V8-Q1, BZX84WC8V2-Q1, BZX84WC9V1-Q1 :

- Catalog : BZX84WC15V, BZX84WC16V, BZX84WC18V, BZX84WC27V, BZX84WC33V, BZX84WC39V, BZX84WC5V6, BZX84WC6V8, BZX84WC8V2, BZX84WC9V1

NOTE: Qualified Version Definitions:

- Catalog - TI's standard catalog product

TAPE AND REEL INFORMATION

REEL DIMENSIONS

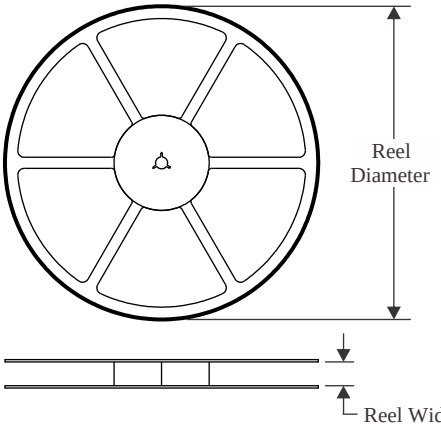

TAPE DIMENSIONS

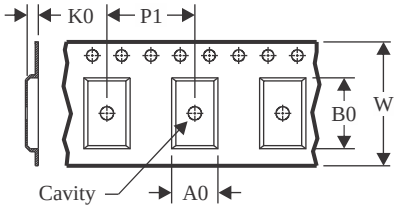

A0	Dimension designed to accommodate the component width
B0	Dimension designed to accommodate the component length
K0	Dimension designed to accommodate the component thickness
W	Overall width of the carrier tape
P1	Pitch between successive cavity centers

QUADRANT ASSIGNMENTS FOR PIN 1 ORIENTATION IN TAPE

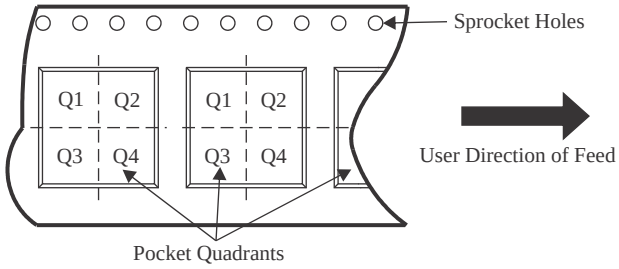

*All dimensions are nominal

Device	Package Type	Package Drawing	Pins	SPQ	Reel Diameter (mm)	Reel Width W1 (mm)	A0 (mm)	B0 (mm)	K0 (mm)	P1 (mm)	W (mm)	Pin1 Quadrant
BZX84WC15VDCKRQ1	SC70	DCK	3	3000	180.0	8.4	2.3	2.75	1.2	4.0	8.0	Q3
BZX84WC16VDCKRQ1	SC70	DCK	3	3000	180.0	8.4	2.3	2.75	1.2	4.0	8.0	Q3
BZX84WC18VDCKRQ1	SC70	DCK	3	3000	180.0	8.4	2.3	2.75	1.2	4.0	8.0	Q3
BZX84WC27VDCKRQ1	SC70	DCK	3	3000	180.0	8.4	2.3	2.75	1.2	4.0	8.0	Q3
BZX84WC33VDCKRQ1	SC70	DCK	3	3000	180.0	8.4	2.3	2.75	1.2	4.0	8.0	Q3
BZX84WC39VDCKRQ1	SC70	DCK	3	3000	180.0	8.4	2.3	2.75	1.2	4.0	8.0	Q3
BZX84WC5V6DCKRQ1	SC70	DCK	3	3000	180.0	8.4	2.3	2.75	1.2	4.0	8.0	Q3
BZX84WC6V8DCKRQ1	SC70	DCK	3	3000	180.0	8.4	2.3	2.75	1.2	4.0	8.0	Q3
BZX84WC8V2DCKRQ1	SC70	DCK	3	3000	180.0	8.4	2.3	2.75	1.2	4.0	8.0	Q3
BZX84WC9V1DCKRQ1	SC70	DCK	3	3000	180.0	8.4	2.3	2.75	1.2	4.0	8.0	Q3

TAPE AND REEL BOX DIMENSIONS

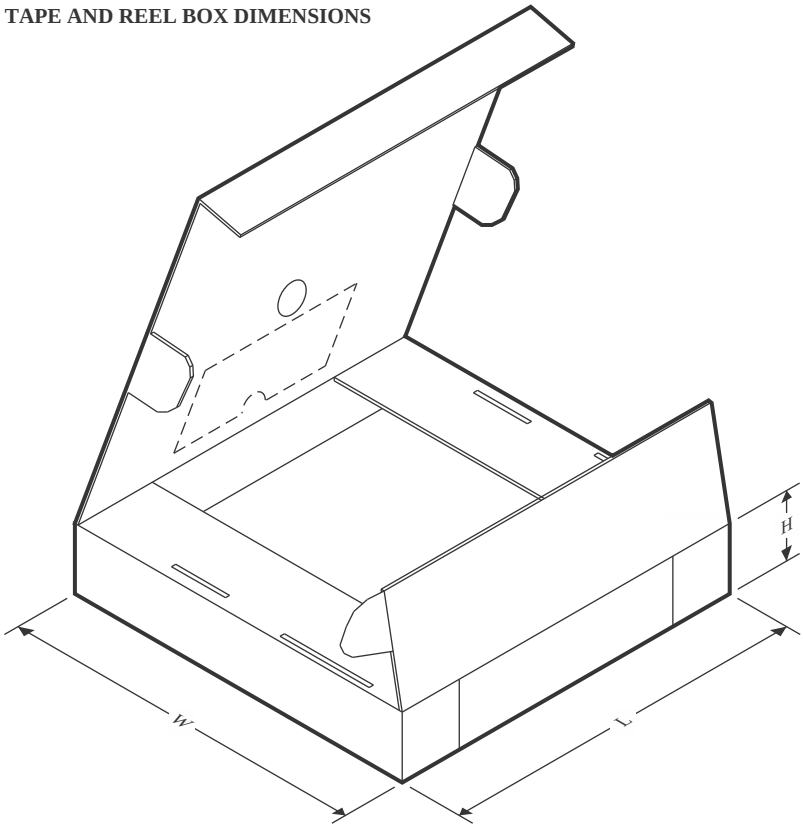

*All dimensions are nominal

Device	Package Type	Package Drawing	Pins	SPQ	Length (mm)	Width (mm)	Height (mm)
BZX84WC15VDCKRQ1	SC70	DCK	3	3000	210.0	185.0	35.0
BZX84WC16VDCKRQ1	SC70	DCK	3	3000	210.0	185.0	35.0
BZX84WC18VDCKRQ1	SC70	DCK	3	3000	210.0	185.0	35.0
BZX84WC27VDCKRQ1	SC70	DCK	3	3000	210.0	185.0	35.0
BZX84WC33VDCKRQ1	SC70	DCK	3	3000	210.0	185.0	35.0
BZX84WC39VDCKRQ1	SC70	DCK	3	3000	210.0	185.0	35.0
BZX84WC5V6DCKRQ1	SC70	DCK	3	3000	210.0	185.0	35.0
BZX84WC6V8DCKRQ1	SC70	DCK	3	3000	210.0	185.0	35.0
BZX84WC8V2DCKRQ1	SC70	DCK	3	3000	210.0	185.0	35.0
BZX84WC9V1DCKRQ1	SC70	DCK	3	3000	210.0	185.0	35.0

PACKAGE OUTLINE

DCK0003A

SOT-SC70 - 1.1 max height

SMALL OUTLINE TRANSISTOR SC70

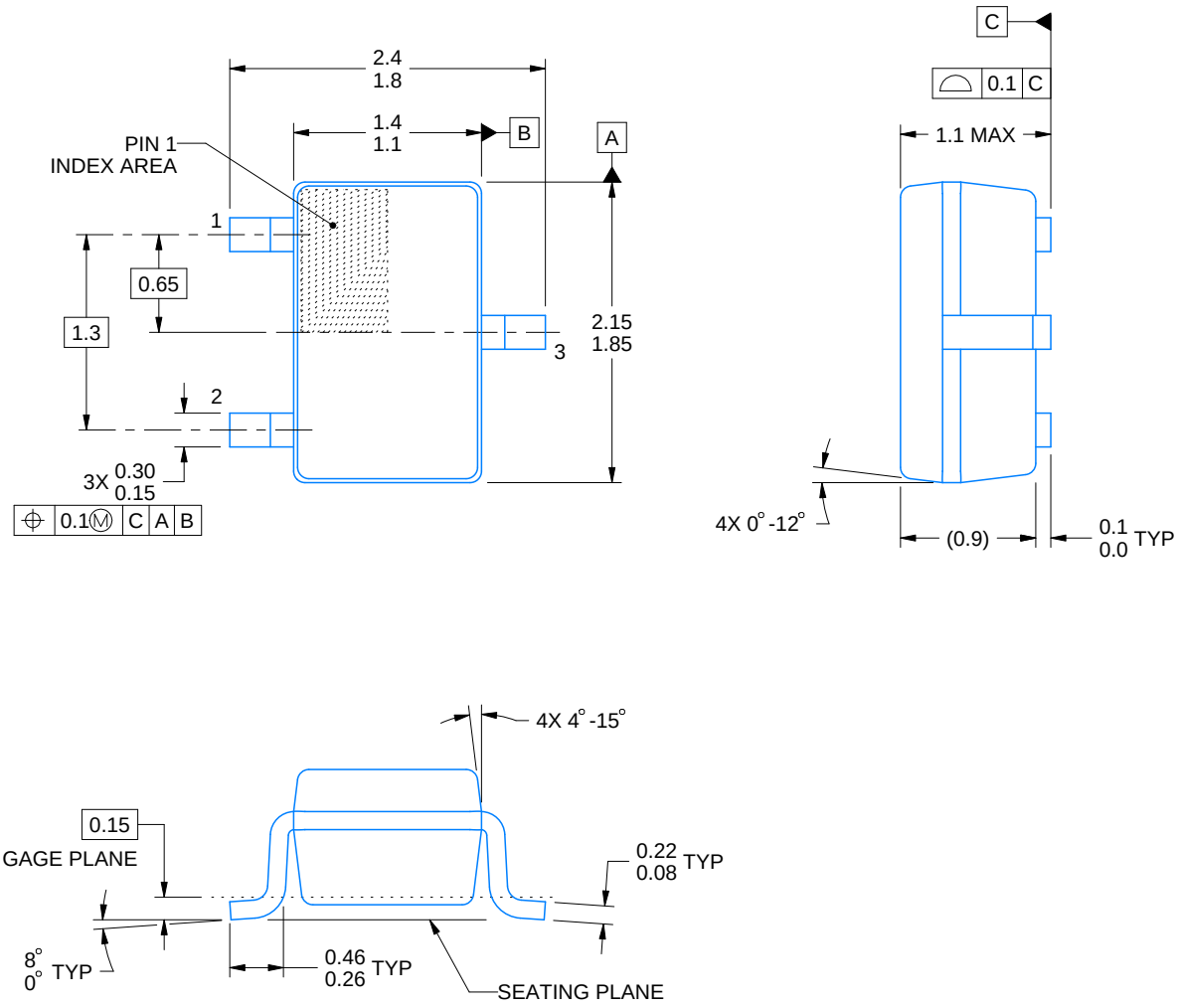

4220745/F 11/2024

NOTES:

1. All linear dimensions are in millimeters. Any dimensions in parenthesis are for reference only. Dimensioning and tolerancing per ASME Y14.5M.
2. This drawing is subject to change without notice.
3. Body dimensions do not include mold flash, protrusions, or gate burrs. Mold flash, protrusions, or gate burrs shall not exceed 0.25mm per side

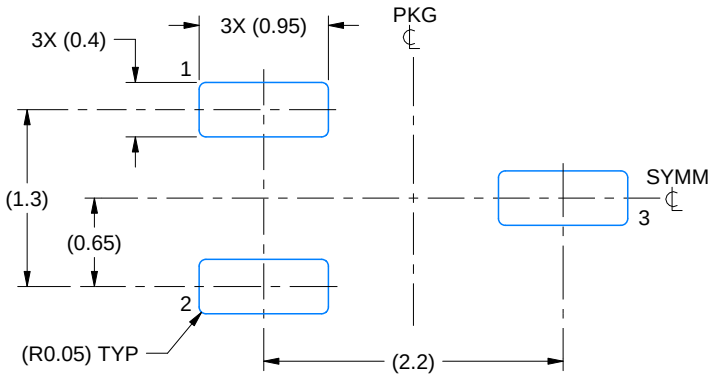

LAND PATTERN EXAMPLE
EXPOSED METAL SHOWN
SCALE:18X

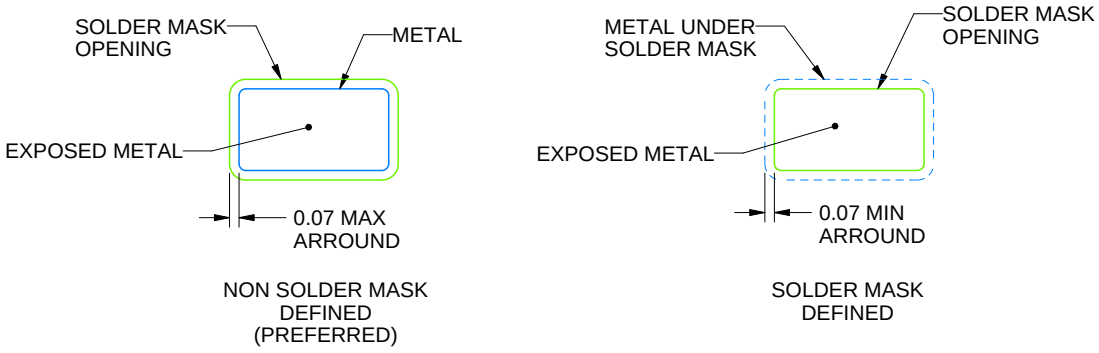

SOLDER MASK DETAILS

4220745/F 11/2024

NOTES: (continued)

4. Publication IPC-7351 may have alternate designs.
5. Solder mask tolerances between and around signal pads can vary based on board fabrication site.

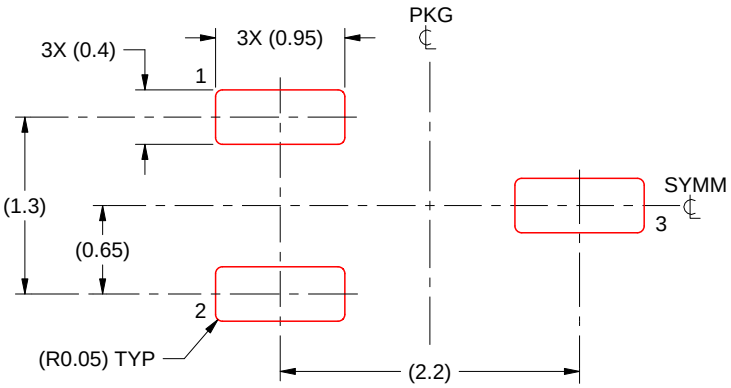

SOLDER PASTE EXAMPLE
BASED ON 0.125 THICK STENCIL
SCALE:18X

4220745/F 11/2024

NOTES: (continued)

6. Laser cutting apertures with trapezoidal walls and rounded corners may offer better paste release. IPC-7525 may have alternate design recommendations.
7. Board assembly site may have different recommendations for stencil design.

IMPORTANT NOTICE AND DISCLAIMER

TI PROVIDES TECHNICAL AND RELIABILITY DATA (INCLUDING DATASHEETS), DESIGN RESOURCES (INCLUDING REFERENCE DESIGNS), APPLICATION OR OTHER DESIGN ADVICE, WEB TOOLS, SAFETY INFORMATION, AND OTHER RESOURCES “AS IS” AND WITH ALL FAULTS, AND DISCLAIMS ALL WARRANTIES, EXPRESS AND IMPLIED, INCLUDING WITHOUT LIMITATION ANY IMPLIED WARRANTIES OF MERCHANTABILITY, FITNESS FOR A PARTICULAR PURPOSE OR NON-INFRINGEMENT OF THIRD PARTY INTELLECTUAL PROPERTY RIGHTS.

These resources are intended for skilled developers designing with TI products. You are solely responsible for (1) selecting the appropriate TI products for your application, (2) designing, validating and testing your application, and (3) ensuring your application meets applicable standards, and any other safety, security, regulatory or other requirements.

These resources are subject to change without notice. TI grants you permission to use these resources only for development of an application that uses the TI products described in the resource. Other reproduction and display of these resources is prohibited. No license is granted to any other TI intellectual property right or to any third party intellectual property right. TI disclaims responsibility for, and you fully indemnify TI and its representatives against any claims, damages, costs, losses, and liabilities arising out of your use of these resources.

TI’s products are provided subject to TI’s Terms of Sale, TI’s General Quality Guidelines, or other applicable terms available either on ti.com or provided in conjunction with such TI products. TI’s provision of these resources does not expand or otherwise alter TI’s applicable warranties or warranty disclaimers for TI products. Unless TI explicitly designates a product as custom or customer-specified, TI products are standard, catalog, general purpose devices.

TI objects to and rejects any additional or different terms you may propose.

Copyright © 2026, Texas Instruments Incorporated

Last updated 10/2025