CP3BT26 Reprogrammable Connectivity Processor with Bluetooth®, USB, and CAN Interfaces

Check for Samples: CP3BT26

1 GENERAL DESCRIPTION

The CP3BT26 connectivity processor combines high performance with the massive integration needed for embedded Bluetooth applications. A powerful RISC core with on-chip SRAM and Flash memory provides high computing bandwidth, hardware communications peripherals provide high- I/O bandwidth, and an external bus provides system expandability.

On-chip communications peripherals include: Bluetooth Lower Link Controller, Universal Serial Bus (USB) 1.1 node, CAN, Microwire/Plus, SPI, ACCESS.bus, quad UART, 12-bit A/D converter, and Advanced Audio Interface (AAI). Additional on-chip peripherals include Random Number Generator (RNG), DMA controller, CVSD/PCM conversion module, Timing and Watchdog Unit, Versatile Timer Unit, Multi-Function Timer, and Multi-Input Wake-Up (MIWU) unit.

Bluetooth hand-held devices can be both smaller and lower in cost for maximum consumer appeal. The low voltage and advanced power-saving modes achieve new design points in the trade-off between battery size and operating time for handheld and portable applications.

In addition to providing the features needed for the next generation of embedded Bluetooth products, the CP3BT26 is backed up by the software resources designers need for rapid time-to-market, including an operating system, Bluetooth protocol stack implementation, peripheral drivers, reference designs, and an integrated development environment. Combined with a Bluetooth radio transceiver such as TI's LMX5252, the CP3BT26 provides a complete Bluetooth system solution.

Texas Instruments offers a complete and industry-proven application development environment for CP3BT26 applications, including the IAR Embedded Workbench, iSYSTEM winIDEA and iC3000 Active Emulator, Bluetooth Development Board, Bluetooth Protocol Stack, and Application Software.

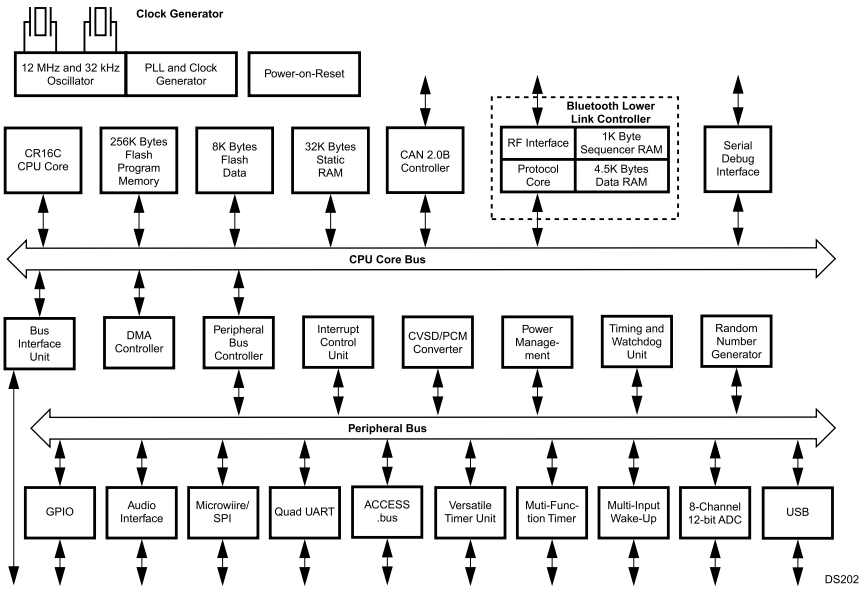

Figure 1-1. Block Diagram

Please be aware that an important notice concerning availability, standard warranty, and use in critical applications of Texas Instruments semiconductor products and disclaimers thereto appears at the end of this data sheet.

PRODUCTION DATA information is current as of publication date. Products conform to specifications per the terms of the Texas Instruments standard warranty. Production processing does not necessarily include testing of all parameters.

Copyright © 2007–2013, Texas Instruments Incorporated

1 GENERAL DESCRIPTION 1
2 INTRODUCTION 4
2.1 Features 4
3 DEVICE OVERVIEW 6
3.1 CR16C CPU CORE 6
3.2 MEMORY 6
3.3 INPUT/OUTPUT PORTS 6
3.4 BUS INTERFACE UNIT 7
3.5 INTERRUPT CONTROL UNIT (ICU) 7
3.6 MULTI-INPUT WAKE-UP 7
3.7 BLUETOOTH LLC 7
3.8 USB 7
3.9 CAN INTERFACE 8
3.10 QUAD UART 8
3.11 ADVANCED AUDIO INTERFACE 8
3.12 CVSD/PCM CONVERSION MODULE 8
3.13 12-BIT ANALOG TO DIGITAL CONVERTER 8
3.14 RANDOM NUMBER GENERATOR 9
3.15 MICROWIRE/SPI 9
3.16 ACCESS.BUS INTERFACE 9
3.17 LTI-FUNCTION TIMER 10
3.18 TIMING AND WATCHDOG MODULE 10
3.19 VERSATILE TIMER UNIT 10
3.20 TRIPLE CLOCK AND RESET 10
3.21 POWER MANAGEMENT 11
3.22 DMA CONTROLLER 11
3.23 SERIAL DEBUG INTERFACE 12
3.24 DEVELOPMENT SUPPORT 12
4 SIGNAL DESCRIPTIONS 13
5 CPU ARCHITECTURE 19
5.1 GENERAL-PURPOSE REGISTERS 19
5.2 DEDICATED ADDRESS REGISTERS 20
5.3 PROCESSOR STATUS REGISTER (PSR) 21
5.4 CONFIGURATION REGISTER (CFG) 22
5.5 ADDRESSING MODES 22
5.6 STACKS 23
5.7 INSTRUCTION SET 24
6 MEMORY 28
6.1 OPERATING ENVIRONMENT 28
6.2 BUS INTERFACE UNIT (BIU) 29
6.3 BUS CYCLES 29
6.4 BIU CONTROL REGISTERS 29
6.5 WAIT AND HOLD STATES 34
7 SYSTEM CONFIGURATION REGISTERS 35
7.1 MODULE CONFIGURATION REGISTER (MCFG) 35
7.2 MODULE STATUS REGISTER (MSTAT) 36
7.3 SOFTWARE RESET REGISTER (SWRESET) 36
8 FLASH MEMORY 37
8.1 FLASH MEMORY PROTECTION 37
8.2 FLASH MEMORY ORGANIZATION 38
8.3 FLASH MEMORY OPERATIONS 39
8.4 INFORMATION BLOCK WORDS 42
8.5 FLASH MEMORY INTERFACE REGISTERS 44
9 DMA CONTROLLER 52
9.1 CHANNEL ASSIGNMENT 52
9.2 TRANSFER TYPES 52
9.3 OPERATION MODES 54
9.4 SOFTWARE DMA REQUEST 56
9.5 DEBUG MODE 56
9.6 DMA CONTROLLER REGISTER SET 56
10 INTERRUPTS 60
10.1 NON-MASKABLE INTERRUPTS 60
10.2 MASKABLE INTERRUPTS 60
10.3 INTERRUPT CONTROLLER REGISTERS 61
10.4 MASKABLE INTERRUPT SOURCES 64
10.5 NESTED INTERRUPTS 65
11 TRIPLE CLOCK AND RESET 66
11.1 EXTERNAL CRYSTAL NETWORK 67
11.2 MAIN CLOCK 68
11.3 SLOW CLOCK 68
11.4 PLL CLOCK 69
11.5 SYSTEM CLOCK 69
11.6 AUXILIARY CLOCKS 69
11.7 POWER-ON RESET 70
11.8 EXTERNAL RESET 71
11.9 CLOCK AND RESET REGISTERS 73
12 POWER MANAGEMENT 75
12.1 ACTIVE MODE 76
12.2 POWER SAVE MODE 76
12.3 IDLE MODE 76
12.4 HALT MODE 76
12.5 HARDWARE CLOCK CONTROL 77
12.6 POWER MANAGEMENT REGISTERS 77
12.7 SWITCHING BETWEEN POWER MODES 79
13 MULTI-INPUT WAKE-UP 82
13.1 MULTI-INPUT WAKE-UP REGISTERS 84
13.2 PROGRAMMING PROCEDURES 88
14 INPUT/OUTPUT PORTS 90
14.1 PORT REGISTERS 91
14.2 OPEN-DRAIN OPERATION 95
15 BLUETOOTH CONTROLLER 96
15.1 RF INTERFACE 96
15.2 SERIAL INTERFACE 99
15.3 LMX5251 POWER-UP SEQUENCE 103
15.4 LMX5252 POWER-UP SEQUENCE 104
15.5 BLUETOOTH SLEEP MODE 105
15.6 BLUETOOTH GLOBAL REGISTERS 106
15.7 BLUETOOTH SEQUENCER RAM 107
15.8 BLUETOOTH SHARED DATA RAM 107
16 12-BIT ANALOG TO DIGITAL CONVERTER 108
16.1 FUNCTIONAL DESCRIPTION 108
16.2 TOUCHSCREEN INTERFACE 111
16.3 ADC OPERATION IN POWER-SAVING MODES 114
16.4 FREEZE 115
16.5 ADC REGISTER SET 115
17 RANDOM NUMBER GENERATOR (RNG) 121

Copyright © 2007–2013, Texas Instruments Incorporated

17.1 FREEZE 121
17.2 RANDOM NUMBER GENERATOR REGISTER SET 122
18 USB CONTROLLER 124
18.1 FUNCTIONAL STATES 124
18.2 ENDPOINT OPERATION 126
18.3 USB CONTROLLER REGISTERS 131
18.4 TRANSCEIVER INTERFACE 149
19 CAN MODULE 150
19.1 FUNCTIONAL DESCRIPTION 151
19.2 BASIC CAN CONCEPTS 153
19.3 MESSAGE TRANSFER 164
19.4 ACCEPTANCE FILTERING 165
19.5 RECEIVE STRUCTURE 168
19.6 TRANSMIT STRUCTURE 172
19.7 Interrupts 177
19.8 TIME STAMP COUNTER 178
19.9 MEMORY ORGANIZATION 179
19.10 CAN CONTROLLER REGISTERS 180
19.11 SYSTEM START-UP AND MULTI-INPUT WAKE-UP 197
19.12 USAGE HINT 201
20 ADVANCED AUDIO INTERFACE 202
20.1 AUDIO INTERFACE SIGNALS 202
20.2 AUDIO INTERFACE MODES 203
20.3 BIT CLOCK GENERATION 208
20.4 FRAME CLOCK GENERATION 209
20.5 Audio Interface Operation 209
20.6 COMMUNICATION OPTIONS 213
20.7 AUDIO INTERFACE REGISTERS 218
21 CVSD/PCM CONVERSION MODULE 228
21.1 OPERATION 228
21.2 PCM CONVERSIONS 229
21.3 CVSD CONVERSION 229
21.4 PCM TO CVSD CONVERSION 229
21.5 CVSD TO PCM CONVERSION 230
21.6 INTERRUPT GENERATION 230
21.7 DMA SUPPORT 230
21.8 FREEZE 231
21.9 CVSD/PCM CONVERTER REGISTERS 231
22 UART MODULES 235
22.1 FUNCTIONAL OVERVIEW 235
22.2 UART OPERATION 236
22.3 UART REGISTERS 243
22.4 BAUD RATE CALCULATIONS 250
23 MICROWIRE/SPI INTERFACE 254
23.1 MICROWIRE OPERATION 255
23.2 MASTER MODE 257
23.3 SLAVE MODE 259
23.4 INTERRUPT GENERATION 259
23.5 MICROWIRE INTERFACE REGISTERS 260
24 ACCESS.BUS INTERFACE 263
24.1 ACB PROTOCOL OVERVIEW 263
24.2 ACB FUNCTIONAL DESCRIPTION 266
24.3 ACCESS.BUS INTERFACE REGISTERS 270
24.4 USAGE HINTS 275
25 TIMING AND WATCHDOG MODULE 278
25.1 TWM STRUCTURE 278
25.2 TIMER T0 OPERATION 278
25.3 WATCHDOG OPERATION 279
25.4 TWM REGISTERS 280
25.5 WATCHDOG PROGRAMMING PROCEDURE 283
26 MULTI-FUNCTION TIMER 284
26.1 TIMER STRUCTURE 284
26.2 TIMER OPERATING MODES 287
26.3 TIMER INTERRUPTS 292
26.4 TIMER I/O FUNCTIONS 292
26.5 TIMER REGISTERS 293
27 VERSATILE TIMER UNIT (VTU) 298
27.1 VTU FUNCTIONAL DESCRIPTION 299
27.2 VTU REGISTERS 306
28 REGISTER MAP 311
29 REGISTER BIT FIELDS 322
30 ELECTRICAL CHARACTERISTICS 332
30.1 ABSOLUTE MAXIMUM RATINGS 332
30.2 DC ELECTRICAL CHARACTERISTICS 332
30.3 USB TRANSCEIVER ELECTRICAL CHARACTERISTICS 333
30.4 ADC ELECTRICAL CHARACTERISTICS 333
30.5 FLASH MEMORY ON-CHIP PROGRAMMING 334
30.6 OUTPUT SIGNAL LEVELS 335
30.7 CLOCK AND RESET TIMING 335
30.8 UART TIMING 337
30.9 I/O PORT TIMING 338
30.10 ADVANCED AUDIO INTERFACE (AAI) TIMING 339
30.11 MICROWIRE/SPI TIMING 341
30.12 ACCESS.BUS TIMING 347
30.13 USB PORT AC CHARACTERISTICS 349
30.14 MULTI-FUNCTION TIMER (MFT) TIMING 350
30.15 VERSATILE TIMING UNIT (VTU) TIMING 350
30.16 EXTERNAL BUS TIMING 351
31 PIN ASSIGNMENTS 357
31.1 LQFP-128 PACKAGE 357
31.2 LQFP-144 PACKAGE 360
32 Physical Dimensions 364
REVISION HISTORY 365
33 Notes 366

Copyright © 2007–2013, Texas Instruments Incorporated

2 INTRODUCTION

2.1 Features

- **CPU Features**
  - **Fully static RISC processor core, capable of operating from 0 to 24 MHz with zero wait/hold states**
  - **Minimum 41.7 ns instruction cycle time with a 24-MHz internal clock frequency, based on a 12-MHz external input**
  - **47 independently vectored peripheral interrupts**
- **On-Chip Memory**
  - **256K bytes reprogrammable Flash program memory**
  - **8K bytes Flash data memory**
  - **32K bytes of static RAM data memory**
  - **Addresses up to 12M bytes of external memory**
- **Broad Range of Hardware Communications Peripherals**
  - **Bluetooth Lower Link Controller (LLC) including a shared 4.5K byte Bluetooth RAM and 1K byte Sequencer RAM**
  - **Universal Serial Bus (USB) 1.1 full-speed node**
  - **ACCESS.bus serial bus (compatible with Philips I^2C bus)**
  - **CAN interface with 15 message buffers conforming to CAN specification 2.0B active**
  - **8/16-bit SPI, Microwire/Plus serial interface**
  - **Four-channel Universal Asynchronous Receiver/Transmitter (UART), one channel has USART capability**
  - **Advanced Audio Interface (AAI) to connect to external 8/ 13-bit PCM Codecs as well as to ISDN-Controllers through the IOM-2 interface (slave only)**
  - **CVSD/PCM converter supporting one bidirectional audio connection**
- **General-Purpose Hardware Peripherals**
  - **12-bit A/D Converter (ADC)**
  - **Dual 16-bit Multi-Function Timer (MFT)**
  - **Versatile Timer Unit with four subsystems (VTU)**
  - **Four-channel DMA controller**
  - **Timing and Watchdog Unit**
  - **Random Number Generator peripheral**
- **Extensive Power and Clock Management Support**
  - **On-chip Phase Locked Loop**
  - **Support for multiple clock options**
  - **Dual clock and reset**
  - **Power-down modes**
- **Flexible I/O**
  - **Up to 54 general-purpose I/O pins (shared with on-chip peripheral I/O)**
  - **Programmable I/O pin characteristics: TRI-STATE output, push-pull output, weak pull-up input, high-impedance input**
  - **Schmitt triggers on general-purpose inputs**
  - **Multi-Input Wake-Up (MIWU) capability**
- **Power Supply**
  - **I/O port operation at 2.5V to 3.3V**
  - **Core logic operation at 2.5V**
  - **On-chip power-on reset**
- **Temperature Range**
  - **-40°C to +85°C (Industrial)**
- **Packages**
  - **LQFP-128, LQFP-144**
- **Complete Development Environment**
  - **Pre-integrated hardware and software support for rapid prototyping and production**
  - **Integrated environment**
  - **Project manager**
  - **Multi-file C source editor**
  - **High-level C source debugger**
  - **Comprehensive, integrated, one-stop technical support**
- **Bluetooth Protocol Stack**
  - **Applications can interface to the high-level protocols or directly to the low-level Host Controller Interface (HCI)**
  - **Transport layer support allows HCI command-based interface over UART port**
  - **Baseband (Link Controller) hardware minimizes the bandwidth demand on the CPU**
  - **Link Manager (LM)**
  - **Logical Link Control and Adaptation Protocol (L2CAP)**
  - **Service Discovery Protocol (SDP)**
  - **RFCOMM Serial Port Emulation Protocol**
  - **All packet types, piconet, and scatternet functionality supported**

COP is a registered trademark of Texas Instruments Inc..
Bluetooth is a registered trademark of Bluetooth SIG, Inc..

 Copyright © 2007–2013, Texas Instruments Incorporated

Table 2-1. CP3BT26 Connectivity Processor Selection Guide

NSID	Speed (MHz)	Temp. Range	Program Flash (Kbytes)	Data Flash (Kbytes)	SRAM (Kbytes)	External Address Lines	I/Os	Package Type
CP3BT26G18AWM NOPB	24	-40° to +85°C	256	8	32	0	54	LQFP-128
CP3BT26G18AWMX NOPB	24	-40° to +85°C	256	8	32	0	54	LQFP-128
CP3BT26Y98AWM NOPB	24	-40° to +85°C	256	8	32	23	48	LQFP-128
CP3BT26Y98AWMX NOPB	24	-40° to +85°C	256	8	32	23	48	LQFP-128

Copyright © 2007–2013, Texas Instruments Incorporated

3 DEVICE OVERVIEW

The CP3BT26 connectivity processor is a complete microcomputer with all system timing, interrupt logic, program memory, data memory, and I/O ports included on-chip, making it well-suited to a wide range of embedded applications. Figure 1-1 shows the major on-chip components of the CP3BT26 devices.

3.1 CR16C CPU CORE

The CP3BT26 device implements the CR16C CPU core module. The high performance of the CPU core results from the implementation of a pipelined architecture with a two bytes-per-cycle pipelined system bus. As a result, the CPU can support a peak execution rate of one instruction per clock cycle.

For more information, please refer to the CR16C Programmer's Reference Manual (document number 424521772-101, which may be downloaded from TI's website at http://www.ti.com).

3.2 MEMORY

The CP3BT26 devices support a uniform linear address space of up to 16 megabytes. Three types of on-chip memory occupy specific regions within this address space, along with any external memory:

- 256K bytes of Flash program memory
- 8K bytes of Flash data memory
- 32K bytes of static RAM
- Up to 12M bytes of external memory (144-pin devices)

The 256K bytes of Flash program memory are used to store the application program, Bluetooth protocol stack, and realtime operating system. The Flash memory has security features to prevent unintentional programming and to prevent unauthorized access to the program code. This memory can be programmed with an external programming unit or with the device installed in the application system (in-system programming).

The 8K bytes of Flash data memory are used for non-volatile storage of data entered by the end-user, such as configuration settings.

The 32K bytes of static RAM are used for temporary storage of data and for the program stack and interrupt stack. Read and write operations can be byte-wide or word-wide, depending on the instruction executed by the CPU.

Up to 12M bytes of external memory can be added on an external bus. The external bus is only available on devices in 144-pin packages.

For Flash program and data memory, the device internally generates the necessary voltages for programming. No additional power supply is required.

3.3 INPUT/OUTPUT PORTS

The device has up to 54 software-configurable I/O pins, organized into seven ports called Port B, Port C, Port E, Port G, Port H, Port I, and Port J. Each pin can be configured to operate as a general-purpose input or general-purpose output. In addition, many I/O pins can be configured to operate as inputs or outputs for on-chip peripheral modules such as the UART, timers, or Microwire/SPI interface.

The I/O pin characteristics are fully programmable. Each pin can be configured to operate as a TRI-STATE output, pushpull output, weak pull-up input, or high-impedance input.

Copyright © 2007–2013, Texas Instruments Incorporated

3.4 BUS INTERFACE UNIT

The Bus Interface Unit (BIU) controls access to internal/external memory and I/O. It determines the configured parameters for bus access (such as the number of wait states for memory access) and issues the appropriate bus signals for each requested access.

The BIU uses a set of control registers to determine how many wait states and hold states are used when accessing Flash program memory and the I/O area. At start-up, the configuration registers are set for slowest possible memory access. To achieve fastest possible program execution, appropriate values must be programmed. These settings vary with the clock frequency and the type of off-chip device being accessed.

3.5 INTERRUPT CONTROL UNIT (ICU)

The ICU receives interrupt requests from internal and external sources and generates interrupts to the CPU. An interrupt is an event that temporarily stops the normal flow of program execution and causes a separate interrupt handler to be executed. After the interrupt is serviced, CPU execution continues with the next instruction in the program following the point of interruption.

Interrupts from the timers, UARTs, Microwire/SPI interface, and Multi-Input Wake-Up, are all maskable interrupts; they can be enabled or disabled by software. There are 47 maskable interrupts, assigned to 47 linear priority levels.

The highest-priority interrupt is the Non-Maskable Interrupt $\overline{\text{NMI}}$, which is generated by a signal received on the $\overline{\text{NMI}}$ input pin.

3.6 MULTI-INPUT WAKE-UP

The two Multi-Input Wake-Up (MIWU) modules can be used for two purposes: to provide inputs for waking up (exiting) from the Halt, Idle, or Power Save mode, and to provide general- purpose edge-triggered maskable interrupts to the level- sensitive interrupt control unit (ICU) inputs. Each 16- channel module generates four programmable interrupts to the ICU, for a total of 8 ICU inputs generated from 32 MIWU inputs. Channels can be individually enabled or disabled, and programmed to respond to positive or negative edges.

3.7 BLUETOOTH LLC

The integrated hardware Bluetooth Lower Link Controller (LLC) complies to the Bluetooth Specification Version 1.1 and integrates the following functions:

- 4.5K-byte dedicated Bluetooth Data RAM
- 1K-byte dedicated Bluetooth Sequencer RAM
- Support of all Bluetooth 1.1 packet types
- Support for fast frequency hopping of 1600 hops/s
- Access code correlation and slot timing recovery circuit
- Power Management Control Logic
- BlueRF-compatible interface (mode 2/3) to connect with TI's LMX5252 and other RF transceiver chips

3.8 USB

The CR16 USB node is a Universal Serial Bus (USB) Node controller compatible with USB Specification 1.1. It integrates the required USB transceiver, the Serial Interface Engine (SIE), and USB endpoint FIFOs. A total of seven endpoint pipes are supported: one bidirectional pipe for the mandatory control EP0 and an additional six pipes for unidirectional endpoints to support USB interrupt, bulk, and isochronous data transfers.

Copyright © 2007–2013, Texas Instruments Incorporated

3.9 CAN INTERFACE

The CAN module contains a Full CAN 2.0B class, CAN serial bus interface for applications that require a high-speed (up to 1 Mbits per second) or a low-speed interface with CAN bus master capability. The data transfer between CAN and the CPU is established by 15 memory-mapped message buffers, which can be individually configured as receive or transmit buffers. An incoming message is filtered by two masks, one for the first 14 message buffers and another one for the 15th message buffer to provide a basic CAN path. A priority decoder allows any buffer to have the highest or lowest transmit priority. Remote transmission requests can be processed automatically by automatic reconfiguration to a receiver after transmission or by automated transmit scheduling upon reception. In addition, a time stamp counter (16-bits wide) is provided to support real-time applications.

The CAN module is a fast core bus peripheral, which allows single-cycle byte or word read/write access. A set of diagnostic features (such as loopback, listen only, and error identification) support the development with the CAN module and provide a sophisticated error management tool.

The CAN receiver can trigger a wake-up condition out of the low-power modes through the Multi-Input Wake-Up module.

3.10 QUAD UART

Four UART modules support a wide range of programmable baud rates and data formats, parity generation, and several error detection schemes. The baud rate is generated onchip, under software control. One UART channel supports hardware flow control, DMA, and USART capability (synchronous mode).

The UARTs offer a wake-up condition from the low-power modes using the Multi-Input Wake-Up module.

3.11 ADVANCED AUDIO INTERFACE

The audio interface provides a serial synchronous, full-duplex interface to CODECs and similar serial devices. Transmit and receive paths operate asynchronously with respect to each other. Each path uses three signals for communication: shift clock, frame synchronization, and data.

When the receiver and transmitter use separate shift clocks and frame sync signals, the interface operates in its asynchronous mode. Alternatively, the transmit and receive path can share the same shift clock and frame sync signals for synchronous mode operation.

3.12 CVSD/PCM CONVERSION MODULE

The CVSD/PCM module performs conversion between CVSD data and PCM data, in which the CVSD encoding is as defined in the Bluetooth specification and the PCM data can be 8-bit μ-Law, 8-bit A-Law, or 13-bit to 16-bit Linear.

3.13 12-BIT ANALOG TO DIGITAL CONVERTER

This device contains an 8-channel, multiplexed input, successive approximation, 12-bit Analog-to-Digital Converter. It supports both Single Ended and Differential modes of operation.

The integrated 12-bit ADC provides the following features:

- 8-channel, multiplexed input
- 4 differential channels
- Single-ended and differential external filtering capability
- 12-bit resolution; 11-bit accuracy
- 15-microsecond conversion time
- Support for 4-wire touchscreen applications
- External start trigger
- Programmable start delay after start trigger

Copyright © 2007–2013, Texas Instruments Incorporated

- Poll or interrupt on done

The ADC is compatible with 4-wire resistive touchscreen applications and is intended to provide the resolution necessary to support handwriting recognition. Low-ohmic touchscreen drivers are provided internally on the ADC[3:0] pins. Pendown detection is also provided.

The ADC provides several options for the voltage reference source. The positive reference can be ADVCC (internal), VREFP, ADC0, or ADC3. The negative reference can be ADVCC (internal), ADC1, or ADC2.

Two specific analog channel selection modes are supported. These are as follows:

- Allow any specific channel to be selected at one time. The A/D Converter performs the specific conversion requested and stops.
- Allow any differential channel pair to be selected at one time. The A/D Converter performs the specific differential conversion requested and stops.

In both Single-Ended and Differential modes, there is the capability to connect the analog multiplexer output and A/D converter input to external pins. This provides the ability to externally connect a common filter/signal conditioning circuit for the A/D Converter.

3.14 RANDOM NUMBER GENERATOR

RNG peripheral for use in Trusted Computer Peripheral Applications (TCPA) to improve the authenticity, integrity, and privacy of Internet-based communication and commerce.

3.15 MICROWIRE/SPI

The Microwire/SPI (MWSPI) interface module supports synchronous serial communications with other devices that conform to Microwire or Serial Peripheral Interface (SPI) specifications. It supports 8-bit and 16-bit data transfers.

The Microwire interface allows several devices to communicate over a single system consisting of four wires: serial in, serial out, shift clock, and slave enable. At any given time, the Microwire interface operates as the master or a slave. The Microwire interface supports the full set of slave select for multi-slave implementation.

In master mode, the shift clock is generated on-chip under software control. In slave mode, a wake-up out of a lowpower mode may be triggered using the Multi-Input Wake- Up module.

3.16 ACCESS.BUS INTERFACE

The ACCESS.bus interface module (ACB) is a two-wire serial interface compatible with the ACCESS.bus physical layer. It is also compatible with Intel's System Management Bus (SMBus) and Philips' I2C bus. The ACB module can be configured as a bus master or slave, and it can maintain bidirectional communications with both multiple master and slave devices.

The ACCESS.bus receiver can trigger a wake-up condition out of the low-power modes through the Multi-Input Wake- Up module.

Copyright © 2007–2013, Texas Instruments Incorporated

3.17 LTI-FUNCTION TIMER

The Multi-Function Timer (MFT) module contains a pair of 16-bit timer/counter registers. Each timer/counter unit can be configured to operate in any of the following modes:

- *Processor-Independent Pulse Width Modulation (PWM) mode:* Generates pulses of a specified width and duty cycle and provides a general-purpose timer/ counter.
- *Dual Input Capture mode:* Measures the elapsed time between occurrences of external event and provides a general-purpose timer/counter.
- *Dual Independent Timer mode:* Generates system timing signals or counts occurrences of external events.
- *Single Input Capture and Single Timer mode:* Provides one external event counter and one system timer.

3.18 TIMING AND WATCHDOG MODULE

The Timing and Watchdog Module (TWM) contains a Real-Time timer and a Watchdog unit. The Real-Time Clock Timing function can be used to generate periodic real-time based system interrupts. The timer output is one of 16 inputs to the Multi-Input Wake-Up module which can be used to exit from a power-saving mode. The Watchdog unit is designed to detect the application program getting stuck in an infinite loop resulting in loss of program control or “runaway” programs. When the watchdog triggers, it resets the device. The TWM is clocked by the low-speed System Clock.

3.19 VERSATILE TIMER UNIT

The Versatile Timer Unit (VTU) module contains four independent timer subsystems, each operating in either dual 8-bit PWM configuration, as a single 16-bit PWM timer, or a 16-bit counter with two input capture channels. Each of the four timer subsystems offer an 8-bit clock prescaler to accommodate a wide range of frequencies.

3.20 TRIPLE CLOCK AND RESET

The Triple Clock and Reset module generates a high-speed main System Clock from an external crystal network. It also provides the main system reset signal and a power-on reset function.

This module generates a slow System Clock (32.768 kHz) from an optional external crystal network. The Slow Clock is used for operating the device in a low-power mode. The 32.768 kHz external crystal network is optional, because the low speed System Clock can be derived from the highspeed clock by a prescaler. Also, two independent clocks divided down from the high speed clock are available on output pins.

The Triple Clock and Reset module provides the clock signals required for the operation of the various CP3BT26 on-chip modules. From external crystal networks, it generates the Main Clock, which can be scaled up to 24 MHz from an external 12 MHz input clock, and a 32.768 kHz secondary System Clock. The 12 MHz external clock is primarily used as the reference frequency for the on-chip PLL. The clock for modules which require a fixed clock rate (for example, the Bluetooth LLC and the CVSD/PCM transcoder) is also generated through prescalers from the 12 MHz clock. The PLL may be used to drive the high-speed System Clock through a prescaler. Alternatively, the high speed System Clock can be derived directly from the 12 MHz Main Clock.

In addition, this module generates the device reset by using reset input signals coming from an external reset and various on-chip modules.

Copyright © 2007–2013, Texas Instruments Incorporated

3.21 POWER MANAGEMENT

The Power Management Module (PMM) improves the efficiency of the device by changing the operating mode and power consumption to match the required level of activity.

The device can operate in any of four power modes:

- *Active:* The device operates at full speed using the high-frequency clock. All device functions are fully operational.
- *Power Save:* The device operates at reduced speed using the Slow Clock. The CPU and some modules can continue to operate at this low speed.
- *Idle:* The device is inactive except for the Power Management Module and Timing and Watchdog Module, which continue to operate using the Slow Clock.
- *Halt:* The device is inactive but still retains its internal state (RAM and register contents).

3.22 DMA CONTROLLER

The Direct Memory Access Controller (DMAC) can speed up data transfer between memory and I/O devices or between two memories, relative to data transfers performed directly by the CPU. A method called cycle-stealing allows the CPU and the DMAC to share the CPU bus efficiently. The DMAC implements four independent DMA channels. DMA requests from a primary and a secondary source are recognized for each DMA channel, as well as a software DMA request issued directly by the CPU. Table 3-1 shows the DMA channel assignment on the CP3BT26 architecture. The following on-chip modules can assert a DMA request to the DMAC:

- CR16C (Software DMA request)
- USB
- USART
- Advanced Audio Interface
- CVSD/PCM Converter

Table 3-1 shows how the four DMA channels are assigned to the modules listed above.

Table 3-1. DMA Channel Assignment

Channel	Primary/ Secondary	Peripheral	Transaction
0	Primary	USB	Read/Write
	Secondary	UART0	Read
1	Primary	UART0	Write
	Secondary	Unused	N/A
2	Primary	AAI	Read
	Secondary	CVSD/PCM	Read
3	Primary	AAI	Write
	Secondary	CVSD/PCM	Write

The interface can handle data words of either 8- or 16-bit length and data frames can consist of up to four slots. In the normal mode of operation, the interface only transfers one word at a periodic rate. In the network mode, the interface transfers multiple words at a periodic rate. The periodic rate is also called a data frame and each word within one frame is called a slot. The beginning of each new data frame is marked by the frame sync signal.

Copyright © 2007–2013, Texas Instruments Incorporated

3.23 SERIAL DEBUG INTERFACE

The Serial Debug Interface module (SDI module) provides a JTAG-based serial link to an external debugger, for example running on a PC. In addition, the SDI module integrates an on-chip debug module, which allows the user to set up to eight hardware breakpoints on instruction execution and data transfer. The SDI module can act as a CPU bus master to access all memory mapped resources, such as RAM and peripherals. Therefore it also allows for fast program code download into the on-chip Flash program memory using the JTAG interface.

Note: The SDI module may assert Freeze mode to gather information, which may cause periodic fluctuations in response (bus availability, interrupt latency, etc.). Anomalous behavior often may be traced to SDI activity.

3.24 DEVELOPMENT SUPPORT

In addition to providing the features needed for the next generation of embedded Bluetooth products, the CP3BT26 devices are backed up by the software resources designers need for rapid product development, including an operating system, Bluetooth protocol stack implementation, peripheral drivers, reference designs, and an integrated development environment. Combined with TI's LMX5251 Bluetooth radio transceiver, the CP3BT26 devices provide a total Bluetooth system solution.

Texas Instruments offers a complete and industry-proven application development environment for CP3BT26 applications, including the IAR Embedded Workbench, iSYSTEM winIDEA and iC3000 Active Emulator, Bluetooth Development Board, Bluetooth Protocol Stack, and Application Software. See your TI Semiconductor sales representative for current information on availability and features of emulation equipment and evaluation boards.

Copyright © 2007–2013, Texas Instruments Incorporated

4 SIGNAL DESCRIPTIONS

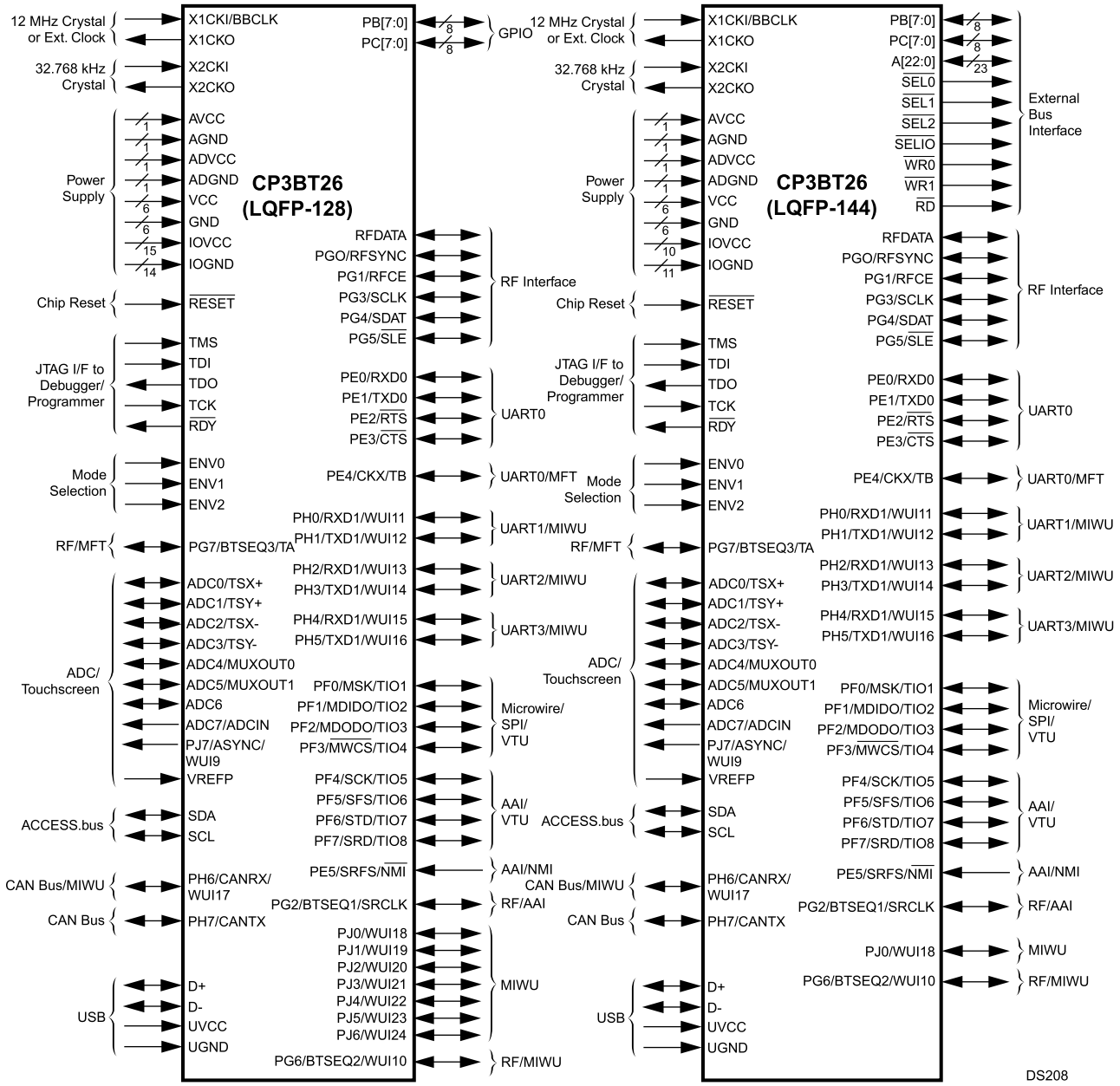

(1) Some pins may be enabled as general-purpose I/O-port pins or as alternate functions associated with specific peripherals or interfaces. These pins may be individually configured as port pins, even when the associated peripheral or interface is enabled. Table 4-1 describes the device signals for the LQFP-128 package. Table 4-2 describes the device signals for the LQFP-144 package.

Figure 4-1. CP3BT26 Device SIgnals

Table 4-1. CP3BT26 LQFP-128 Signal Descriptions

Name	Pins	I/O	Primary Function	Alternate Name	Alternate Function
X1CK1	1	Input	12 MHz Oscillator Input	BBCLK	BB reference clock for the RF Interface
X1CKO	1	Output	12 MHz Oscillator Output	None	None
X2CKI	1	Input	32 kHz Oscillator Input	None	None
X2CKO	1	Output	32 kHz Oscillator Output	None	None
$\overline{\text{RESET}}$	1	Input	Chip general reset	None	None
ENV0	1	I/O	Special mode select input with internal pull-up during reset	PLLCLK	PLL Clock Output
ENV1	1	I/O	Special mode select input with internal pull-up during reset	CPUCLK	CPU Clock Output
ENV2	1	I/O	Special mode select input with internal pull-up during reset	SLOWCLK	Slow Clock Output
TMS	1	Input	JTAG Test Mode Select (with internal weak pull-up)	None	None
TCK	1	Input	JTAG Test Mode Select (with internal weak pull-up)	None	None
TDI	1	Input	JTAG Test Mode Select (with internal weak pull-up)	None	None
TDO	1	Output	JTAG Test Data Output	None	None
$\overline{\text{RDY}}$	1	Output	NEXUS Ready Output	None	None
VCC	6	Input	2.5V Core Logic Power Supply	None	None
GND	6	Input	Core Ground	None	None
IOVCC	15	Input	2.5–3.3V I/O Power Supply	None	None
IOGND	14	Input	I/O Ground	None	None
AVCC	1	Input	PLL Analog Power Supply	None	None
AGND	1	Input	PLL Analog Ground	None	None
ADVCC	1	Input	ADC Analog Power Supply	None	None
ADGND	1	Input	ADC Analog Ground	None	None
RFDATA	1	I/O	Bluetooth RX/TX Data Pin	None	None
SCL	1	I/O	ACCESS.bus Clock	None	None
SDA	1	I/O	ACCESS.bus Serial Data	None	None
D-	1	I/O	USB D- Upstream Port	None	None
D+	1	I/O	USB D+ Upstream Port	None	None
UVCC	1	Input	3.3V USB Transceiver Supply	None	None
UGND	1	Input	USB Transceiver Ground	None	None
ADC0	1	I/O	ADC Input Channel 0	TSX+	Touchscreen X+ contact
ADC1	1	I/O	ADC Input Channel 1	TSY+	Touchscreen Y+ contact
ADC2	1	I/O	ADC Input Channel 2	TSX-	Touchscreen X- contact
ADC3	1	I/O	ADC Input Channel 3	TSY-	Touchscreen Y- contact
ADC4	1	I/O	ADC Input Channel 4	MUXOUT0	Analog Multiplexer Output 0
ADC5	1	I/O	ADC Input Channel 5	MUXOUT1	Analog Multiplexer Output 1
ADC6	1	Input	ADC Input Channel 6	None	None
ADC7	1	Input	ADC Input Channel 7	ADCIN	ADC Input (in MUX mode)
VREFP	1	Input	ADC Positive Voltage Reference	None	None
PB[7:0]	8	I/O	Generic I/O	None	None
PC[7:0]	8	I/O	Generic I/O	None	None
PE0	1	I/O	Generic I/O	RXD0	UART Channel 0 Receive Data Input
PE1	1	I/O	Generic I/O	TXD0	UART Channel 0 Transmit Data Output
PE2	1	I/O	Generic I/O	$\overline{\text{RTS}}$	UART Channel 0 Ready-To-Send Output

Copyright © 2007–2013, Texas Instruments Incorporated

Table 4-1. CP3BT26 LQFP-128 Signal Descriptions (continued)

Name	Pins	I/O	Primary Function	Alternate Name	Alternate Function
PE3	1	I/O	Generic I/O	$\overline{\text{CTS}}$	UART Channel 0 Clear-To-Send Input
PE4	1	I/O	Generic I/O	CKX	UART Channel 0 Clock Input
				TB	Multi Function Timer Port B
PE5	1	I/O	Generic I/O	SRFS	AAI Receive Frame Sync
				$\overline{\text{NMI}}$	Non-Maskable Interrupt Input
PF0	1	I/O	Generic I/O	MSK	SPI Shift Clock
				TI01	Versatile Timer Channel 1
PF1	1	I/O	Generic I/O	MDIDO	SPI Master In Slave Out
				TIO2	Versatile Timer Channel 2
PF2	1	I/O	Generic I/O	MDODI	SPI Master Out Slave In
				TIO3	Versatile Timer Channel 3
PF3	1	I/O	Generic I/O	$\overline{\text{MWCS}}$	SPI Slave Select Input
				TIO4	Versatile Timer Channel 4
PF4	1	I/O	Generic I/O	SCK	AAI Clock
				TIO5	Versatile Timer Channel 5
PF5	1	I/O	Generic I/O	SFS	AAI Frame Synchronization
				TIO6	Versatile Timer Channel 6
PF6	1	I/O	Generic I/O	STD	AAI Transmit Data Output
				TIO7	Versatile Timer Channel 7
PF7	1	I/O	Generic I/O	SRD	AAI Receive Data Input
				TI08	Versatile Timer Channel 8
PG0	1	I/O	Generic I/O	RFSYNC	BT AC Correlation/TX Enable Output
PG1	1	I/O	Generic I/O	RFCE	BT RF Chip Enable Output
PG2	1	I/O	Generic I/O	BTSEQ1	Bluetooth Sequencer Status
				SRCLK	AAI Receive Clock
PG3	1	I/O	Generic I/O	SCLK	BT Serial I/F Shift Clock Output
PG4	1	I/O	Generic I/O	SDAT	BT Serial I/F Data
PG5	1	I/O	Generic I/O	$\overline{\text{SLE}}$	BT Serial I/F Load Enable Output
PG6	1	I/O	Generic I/O	WUI10	Multi-Input Wake-Up Channel 10
				BTSEQ2	Bluetooth Sequencer Status
PG7	1	I/O	Generic I/O	TA	Multi Function Timer Port A
				BTSEQ3	Bluetooth Sequencer Status
PH0	1	I/O	Generic I/O	RXD1	UART Channel 1 Receive Data Input
				WUI11	Multi-Input Wake-Up Channel 11
PH1	1	I/O	Generic I/O	TXD1	UART Channel 1 Transmit Data Output
				WUI12	Multi-Input Wake-Up Channel 12
PH2	1	I/O	Generic I/O	RXD2	UART Channel 2 Receive Data Input
				WUI13	Multi-Input Wake-Up Channel 13
PH3	1	I/O	Generic I/O	TXD2	UART Channel 2 Transmit Data Output
				WUI14	Multi-Input Wake-Up Channel 14
PH4	1	I/O	Generic I/O	RXD3	UART Channel 3 Receive Data Input
				WUI15	Multi-Input Wake-Up Channel 15
PH5	1	I/O	Generic I/O	TXD3	UART Channel 3 Transmit Data Output
				WUI16	Multi-Input Wake-Up Channel 16
PH6	1	I/O	Generic I/O	CANRX	CAN Receive Input
				WUI17	Multi-Input Wake-Up Channel 17
PH7	1	I/O	Generic I/O	CANTX	CAN Transmit Output

Copyright © 2007–2013, Texas Instruments Incorporated

Table 4-1. CP3BT26 LQFP-128 Signal Descriptions (continued)

Name	Pins	I/O	Primary Function	Alternate Name	Alternate Function
PJ0	1	I/O	Generic I/O	WUI18	Multi-Input Wake-Up Channel 18
PJ1	1	I/O	Generic I/O	WUI19	Multi-Input Wake-Up Channel 19
PJ2	1	I/O	Generic I/O	WUI20	Multi-Input Wake-Up Channel 20
PJ3	1	I/O	Generic I/O	WUI21	Multi-Input Wake-Up Channel 21
PJ4	1	I/O	Generic I/O	WUI22	Multi-Input Wake-Up Channel 22
PJ5	1	I/O	Generic I/O	WUI23	Multi-Input Wake-Up Channel 23
PJ6	1	I/O	Generic I/O	WUI24	Multi-Input Wake-Up Channel 24
PJ7	1	I/O	Generic I/O	ASYNC	Start convert signal to ADC
				WUI19	Multi-Input Wake-Up Channel 9

Table 4-2. CP3BT26 LQFP-144 Signal Descriptions

Name	Pins	I/O	Primary Function	Alternate Name	Alternate Function
X1CKI	1	Input	12 MHz Oscillator Input	BBCLK	BB reference clock for the RF Interface
X1CKO	1		12 MHz Oscillator Output	None	None
X2CKI	1	Input	32 kHz Oscillator Input	None	None
X2XKO	1		32 kHz Oscillator Output	None	None
$\overline{\text{RESET}}$	1	Input	Chip general reset	None	None
ENV0	1	I/O	Special mode select input with internal pull-up during reset	PLLCLK	PLL Clock Output
ENV1	1	I/O	Special mode select input with internal pull-up during reset	CPUCLK	CPU Clock Output
ENV2	1	I/O	Special mode select input with internal pull-up during reset	SLOWCLK	Slow Clock Output
TMS	1	Input	JTAG Test Mode Select (with internal weak pull-up)	None	None
TCK	1	Input	JTAG Test Clock Input (with internal weak pull-up)	None	None
TDI	1	Input	JTAG Test Data Input (with internal weak pull-up)	None	None
TDO	1		JTAG Test Data Output	None	None
$\overline{\text{RDY}}$	1		NEXUS Ready Output	None	None
VCC	1	Input	2.5V Core Logic Power Supply	None	None
GND	6	Input	Core Ground	None	None
IOVCC	10	Input	2.5–3.3V I/O Power Supply	None	None
IOGND	1	Input	I/O Ground	None	None
AVCC	1	Input	PLL Analog Power Supply	None	None
AGND	1	Input	PLL Analog Ground	None	None
ADVCC	1	Input	ADC Analog Power Supply	None	None
ADGND	1	Input	ADC Analog Ground	None	None
RFDATA	1	I/O	Bluetooth RX/TX Data Pin	None	None
SCL	1	I/O	ACCESS.bus Clock	None	None
SDA	1	I/O	ACCESS.bus Serial Data	None	None
D-	1	I/O	USB D- Upstream Port	None	None
D+	1	I/O	USB D+ Upstream Port	None	None
UVCC	1	Input	3.3V USB Transceiver Supply	None	None
UGND	1	Input	USB Transceiver Ground	None	None
ADC0	1	I/O	ADC Input Channel 0	TSX+	Touchscreen X+ contact

Copyright © 2007–2013, Texas Instruments Incorporated

Table 4-2. CP3BT26 LQFP-144 Signal Descriptions (continued)

Name	Pins	I/O	Primary Function	Alternate Name	Alternate Function
ADC1	1	I/O	ADC Input Channel 1	TSY+	Touchscreen Y+ contact
ADC2	1	I/O	ADC Input Channel 2	TSX-	Touchscreen X- contact
ADC3	1	I/O	ADC Input Channel 3	TSY-	Touchscreen Y- contact
ADC4	1	I/O	ADC Input Channel 4	MUXOUT0	Analog Multiplexer Output 0
ADC5	1	I/O	ADC Input Channel 5	MUXOUT1	Analog Multiplexer Output 1
ADC6	1	Input	ADC Input Channel 6	None	None
ADC7	1	Input	ADC Input Channel 7	ADCIN	ADC Input (in MUX mode)
VREFP	1	Input	ADC Positive Voltage Reference	None	None
PB[7:0]	8	I/O	Generic I/O	D[7:0]	External Data Bus Bits 0 to 7
PC[7:0]	8	I/O	Generic I/O	D[8:15]	External Data Bus Bits 8 to 15
A[22:0]	23	Output	External Address Bus Bits 0 to 22	None	None
$\overline{\text{SEL0}}$	1	Output	Chip Select for Zone 0	None	None
$\overline{\text{SEL1}}$	1	Output	Chip Select for Zone 1	None	None
$\overline{\text{SEL2}}$	1	Output	Chip Select for Zone 2	None	None
$\overline{\text{SELIO}}$	1	Output	Chip Select for I/O Zone	None	None
$\overline{\text{WR0}}$	1	Output	External Memory Write Low Byte	None	None
$\overline{\text{WR1}}$	1	Output	External Memory Write High Byte	None	None
$\overline{\text{RD}}$	1	Output	External Memory Read	None	None
PE0	1	I/O	Generic I/O	RXD0	UART0 Receive Data Input
PE1	1	I/O	Generic I/O	TXD0	UART0 Transmit Data Output
PE2	1	I/O	Generic I/O	$\overline{\text{RTS}}$	UART0 Ready-To-Send Output
PE3	1	I/O	Generic I/O	$\overline{\text{CTS}}$	UART0 Clear-To-Send Input
PE4	1	I/O	Generic I/O	CKX	UART0 Clock Input
				TB	Multi Function Timer Port B
PE5	1	I/O	Generic I/O	SRFS	AAI Receive Frame Sync
				$\overline{\text{NMI}}$	Non-Maskable Interrupt Input
PF0	1	I/O	Generic I/O	MSK	SPI Shift Clock
				TIO1	Versatile Timer Channel 1
PF1	1	I/O	Generic I/O	MDIDO	SPI Master In Slave Out
				TIO2	Versatile Timer Channel 2
PF2	1	I/O	Generic I/O	MDODI	SPI Master Out Slave In
				TIO3	Versatile Timer Channel 3
PF3	1	I/O	Generic I/O	$\overline{\text{MWCS}}$	SPI Slave Select Input
				TIO4	Versatile Timer Channel 4
PF4	1	I/O	Generic I/O	SCK	AAI Clock
				TIO5	Versatile Timer Channel 5
PF5	1	I/O	Generic I/O	SFS	AAI Frame Synchronization
				TIO6	Versatile Timer Channel 6
PF6	1	I/O	Generic I/O	STD	AAI Transmit Data Output
				TIO7	Versatile Timer Channel 7
PF7	1	I/O	Generic I/O	SRD	AAI Receive Data Input
				TIO8	Versatile Timer Channel 8
PG0	1	I/O	Generic I/O	RFSYNC	BT AC Correlation/TX Enable Output
PG1	1	I/O	Generic I/O	RFCE	BT RF Chip Enable Output
PG2	1	I/O	Generic I/O	BTSEQ1	Bluetooth Sequencer Status
				SRCLK	AAI Receive Clock
PG3	1	I/O	Generic I/O	SCLK	BT Serial I/F Shift Clock Output

Copyright © 2007–2013, Texas Instruments Incorporated

Table 4-2. CP3BT26 LQFP-144 Signal Descriptions (continued)

Name	Pins	I/O	Primary Function	Alternate Name	Alternate Function
PG4	1	I/O	Generic I/O	SDAT	BT Serial I/F Data
PG5	1	I/O	Generic I/O	$\overline{\text{SLE}}$	BT Serial I/F Load Enable Output
PG6	1	I/O	Generic I/O	WUI10	Multi-Input Wake-Up Channel 10
				BTSEQ2	Bluetooth Sequencer Status
PG7	1	I/O	Generic I/O	TA	Multi Function Timer Port A
				BTSEQ3	Bluetooth Sequencer Status
PH0	1	I/O	Generic I/O	RXD!	UART Channel 1 Receive Data Input
				WUI11	Multi-Input Wake-Up Channel 11
PH1	1	I/O	Generic I/O	TXD1	UART Channel 1 Transmit Data Output
				WUI12	Multi-Input Wake-Up Channel 12
PH2	1	I/O	Generic I/O	RXD2	UART Channel 2 Receive Data Input
				WUI13	Multi-Input Wake-Up Channel 13
PH3	1	I/O	Generic I/O	TXD2	UART Channel 2 Transmit Data Output
				WUI14	Multi-Input Wake-Up Channel 14
PH4	1	I/O	Generic I/O	RXD3	UART Channel 3 Receive Data Input
				WUI15	Multi-Input Wake-Up Channel 15
PH5	1	I/O	Generic I/O	TXD3	UART Channel 3 Transmit Data Output
				WUI16	Multi-Input Wake-Up Channel 16
PH6	1	I/O	Generic I/O	CANRX	CAN Receive Input
				WUI17	Multi-Input Wake-Up Channel 17
PH7	1	I/O	Generic I/O	CANTX	CAN Transmit Output
PJ0	1	I/O	Generic I/O	WUI18	Multi-Input Wake-Up Channel 18
PJ7	1	I/O	Generic I/O	ASYNC	Start Convert Signal to ADC
				WUI9	Multi-Input Wake-Up Channel 9

Copyright © 2007–2013, Texas Instruments Incorporated

5 CPU ARCHITECTURE

The CP3BT26 uses the CR16C third-generation 16-bit CompactRISC processor core. The CPU implements a Reduced Instruction Set Computer (RISC) architecture that allows an effective execution rate of up to one instruction per clock cycle. For a detailed description of the CPU16C architecture, see the CompactRISC CR16C Programmer's Reference Manual which is available on the TI web site (http://www.ti.com).

The CR16C CPU core includes these internal registers:

- General-purpose registers (R0-R13, RA, and SP)
- Dedicated address registers (PC, ISP, USP, and INTBASE)
- Processor Status Register (PSR)
- Configuration Register (CFG)

The R0-R11, PSR, and CFG registers are 16 bits wide. The R12, R13, RA, SP, ISP and USP registers are 32 bits wide. The PC register is 24 bits wide. Figure 5-1 shows the CPU registers.

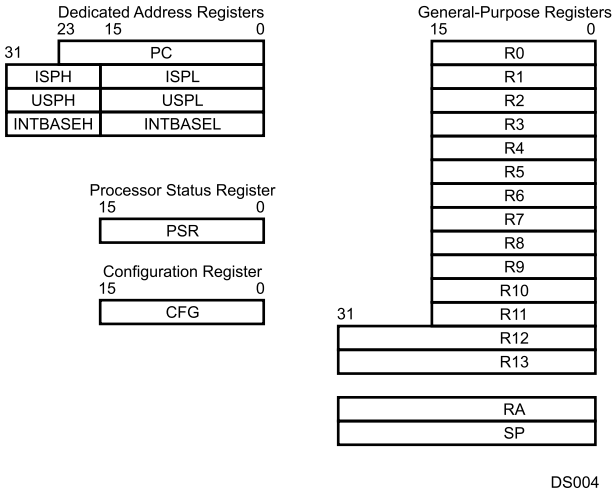

Figure 5-1. CPU Registers

Some register bits are designated as "reserved." Software must write a zero to these bit locations when it writes to the register. Read operations from reserved bit locations return undefined values.

5.1 GENERAL-PURPOSE REGISTERS

The CompactRISC CPU features 16 general-purpose registers. These registers are used individually as 16-bit operands or as register pairs for operations on addresses greater than 16 bits.

- General-purpose registers are defined as R0 through R13, RA, and SP.
- Registers are grouped into pairs based on the setting of the Short Register bit in the Configuration Register (CFG.SR). When the CFG.SR bit is set, the grouping of register pairs is upward-compatible with the architecture of the earlier CR16A/B CPU cores: (R1,R0), (R2,R1) ... (R11,R10), (R12_L, R11), (R13_L, R12_L), (R14_L, R13_L) and SP. (R14_L, R13_L) is the same as (RA,ERA).
- When the CFG.SR bit is clear, register pairs are grouped in the manner used by native CR16C software: (R1,R0), (R2,R1) ... (R11,R10), (R12_L, R11), R12, R13, RA, SP. R12, R13, RA, and SP are 32-bit registers for holding addresses greater than 16 bits.

With the recommended calling convention for the architecture, some of these registers are assigned special hardware and software functions. Registers R0 to R13 are for general purpose use, such as holding variables, addresses, or index values. The SP register holds a pointer to the program runtime stack. The RA register holds a subroutine return address. The R12 and R13 registers are available to hold base addresses used in the index addressing mode.

If a general-purpose register is specified by an operation that is 8 bits long, only the lower byte of the register is used; the upper part is not referenced or modified. Similarly, for word operations on register pairs, only the lower word is used. The upper word is not referenced or modified.

5.2 DEDICATED ADDRESS REGISTERS

The CR16C has four dedicated address registers to implement specific functions: the PC, ISP, USP, and INTBASE registers.

5.2.1 Program Counter (PC) Register

The 24-bit value in the PC register points to the first byte of the instruction currently being executed. CR16C instructions are aligned to even addresses, therefore the least significant bit of the PC is always 0. At reset, the PC is initialized to 0 or an optional predetermined value. When a warm reset occurs, value of the PC prior to reset is saved in the (R1,R0) general-purpose register pair.

5.2.2 Interrupt Stack Pointer (ISP)

The 32-bit ISP register points to the top of the interrupt stack. This stack is used by hardware to service exceptions (interrupts and traps). The stack pointer may be accessed as the ISP register for initialization. The interrupt stack can be located anywhere in the CPU address space. The ISP cannot be used for any purpose other than the interrupt stack, which is used for automatic storage of the CPU registers when an exception occurs and restoration of these registers when the exception handler returns. The interrupt stack grows downward in memory. The least significant bit and the 8 most significant bits of the ISP register are always 0.

5.2.3 User Stack Pointer (USP)

The USP register points to the top of the user-mode program stack. Separate stacks are available for user and supervisor modes, to support protection mechanisms for multitasking software. The processor mode is controlled by the U bit in the PSR register (which is called PSR.U in the shorthand convention). Stack grow downward in memory. If the USP register points to an illegal address (any address greater than 0x00FF_FFFF) and the USP is used for stack access, an IAD trap is taken.

5.2.4 Interrupt Base Register (INTBASE)

The INTBASE register holds the address of the dispatch table for exceptions. The dispatch table can be located anywhere in the CPU address space. When loading the INTBASE register, bits 31 to 24 and bit 0 must written with 0.

 Copyright © 2007–2013, Texas Instruments Incorporated

5.3 PROCESSOR STATUS REGISTER (PSR)

The PSR provides state information and controls operating modes for the CPU. The format of the PSR is shown below.

15 – 12	11	10	9	8	7	6	5	4	3	2	1	0
Reserved	I	P	E	O	N	Z	F	O	U	L	T	C

C — The Carry bit indicates whether a carry or borrow occurred after addition or subtraction.
0 – No carry or borrow occurred.
1 – Carry or borrow occurred.

T — The Trace bit enables execution tracing, in which a Trace trap (TRC) is taken after every instruction. Tracing is automatically disabled during the execution of an exception handler.
0 – Tracing disabled.
1 – Tracing enabled.

L — The Low bit indicates the result of the last comparison operation, with the operands interpreted as unsigned integers.
0 – Second operand greater than or equal to first operand.
1 – Second operand less than first operand.

U — The User Mode bit controls whether the CPU is in user or supervisor mode. In supervisor mode, the SP register is used for stack operations. In user mode, the USP register is used instead. User mode is entered by executing the Jump USR instruction. When an exception is taken, the exception handler automatically begins execution in supervisor mode. The USP register is accessible using the Load Processor Register (LPR/LPRD) instruction in supervisor mode. In user mode, an attempt to access the USP register generates a UND trap.
0 – CPU is executing in supervisor mode.
1 – CPU is executing in user mode.

F — The Flag bit is a general condition flag for signaling exception conditions or distinguishing the results of an instruction, among other thing uses. For example, integer arithmetic instructions use the F bit to indicate an overflow condition after an addition or subtraction operation.

Z — The Zero bit is used by comparison operations. In a comparison of integers, the Z bit is set if the two operands are equal. If the operands are unequal, the Z bit is cleared.
0 – Source and destination operands unequal.
1 – Source and destination operands equal.

N — The Negative bit indicates the result of the last comparison operation, with the operands interpreted as signed integers.
0 – Second operand greater than or equal to first operand.
1 – Second operand less than first operand.

E — The Local Maskable Interrupt Enable bit enables or disables maskable interrupts. If this bit and the Global Maskable Interrupt Enable (I) bit are both set, all interrupts are enabled. If either of these bits is clear, only the nonmaskable interrupt is enabled. The E bit is set by the Enable Interrupts (EI) instruction and cleared by the Disable Interrupts (DI) instruction.
0 – Maskable interrupts disabled.
1 – Maskable interrupts enabled.

P — The Trace Trap Pending bit is used together with the Trace (T) bit to prevent a Trace (TRC) trap from occurring more than once for one instruction. At the beginning of the execution of an instruction, the state of the T bit is copied into the P bit. If the P bit remains set at the end of the instruction execution, the TRC trap is taken.
0 – No trace trap pending.
1 – Trace trap pending.

I — The Global Maskable Interrupt Enable bit is used to enable or disable maskable interrupts. If this bit and the Local Maskable Interrupt Enable (E) bit are both set, all maskable interrupts are taken. If either bit is clear, only the non-maskable interrupt is taken. Unlike the E bit, the I bit is automatically cleared when an interrupt occurs and automatically set upon completion of an interrupt handler.
0 – Maskable interrupts disabled.
1 – Maskable interrupts enabled.

Bits Z, C, L, N, and F of the PSR are referenced from assembly language by the condition code in conditional branch instructions. A conditional branch instruction may cause a branch in program execution, based on the value of one or more of these PSR bits. For example, one of the Bcond instructions, BEQ (Branch EQual), causes a branch if the PSR.Z bit is set.

On reset, bits 0 through 11 of the PSR are cleared, except for the PSR.E bit, which is set. On warm reset, the values of each bit before reset are copied into the R2 general-purpose register. Bits 4 and 8 of the PSR have a constant value of 0. Bits 12 through 15 are reserved. In general, status bits are modified only by specific instructions. Otherwise, status bits maintain their values throughout instructions which do not implicitly affect them.

Copyright © 2007–2013, Texas Instruments Incorporated

5.4 CONFIGURATION REGISTER (CFG)

The CFG register is used to enable or disable various operating modes and to control optional on-chip caches. Because the CP3BT26 does not have cache memory, the cache control bits in the CFG register are reserved. All CFG bits are cleared on reset.

15 – 10	9	8	7	6	5 – 2	1	0
Reserved	SR	ED	0	0	Reserved	0	0

ED — The Extended Dispatch bit selects whether the size of an entry in the interrupt dispatch table (IDT) is 16 or 32 bits. Each entry holds the address of the appropriate exception handler. When the IDT has 16-bit entries, and all exception handlers must reside in the first 128K of the address space. The location of the IDT is held in the INTBASE register, which is not affected by the state of the ED bit.
0 – Interrupt dispatch table has 16-bit entries.
1 – Interrupt dispatch table has 32-bit entries

SR — The Short Register bit enables a compatibility mode for the CR16B large model. In the CR16C core, registers R12, R13, and RA are extended to 32 bits. In the CR16B large model, only the lower 16 bits of these registers are used, and these "short registers" are paired together for 32-bit operations. In this mode, the (RA, R13) register pair is used as the extended RA register, and address displacements relative to a single register are supported with offsets of 0 and 14 bits in place of the index addressing with these displacements.
0 – 32-bit registers are used.
1 – 16-bit registers are used (CR16B mode).

5.5 ADDRESSING MODES

The CR16C CPU core implements a load/store architecture, in which arithmetic and logical instructions operate on register operands. Memory operands are made accessible in registers using load and store instructions. For efficient implementation of I/O-intensive embedded applications, the architecture also provides a set of bit operations that operate on memory operands.

The load and store instructions support these addressing modes: register/pair, immediate, relative, absolute, and index addressing. When register pairs are used, the lower bits are in the lower index register and the upper bits are in the higher index register. When the CFG.SR bit is clear, the 32- bit registers R12, R13, RA, and SP are also treated as register pairs.

References to register pairs in assembly language use parentheses. With a register pair, the lower numbered register pair must be on the right. For example,

- jump (r5, r4)
- load $4(r4,r3), (r6,r5)
- load $5(r12), (r13)

The instruction set supports the following addressing modes:

Register/Pair Mode — In register/pair mode, the operand is held in a general-purpose register, or in a general- purpose register pair. For example, the following instruction adds the contents of the low byte of register r1 to the contents of the low byte of r2, and places the result in the low byte register r2. The high byte of register r2 is not modified.
ADDB R1, R2

Immediate Mode — In immediate mode, the operand is a constant value which is encoded in the instruction. For example, the following instruction multiplies the value of r4 by 4 and places the result in r4
MULW $4, R4

Copyright © 2007–2013, Texas Instruments Incorporated

Relative Mode

In relative mode, the operand is addressed using a relative value (displacement) encoded in the instruction. This displacement is relative to the current Program Counter (PC), a general-purpose register, or a register pair.

In branch instructions, the displacement is always relative to the current value of the PC Register. For example, the following instruction causes an unconditional branch to an address 10 ahead of the current
PC.BR *+10

In another example, the operand resides in memory. Its address is obtained by adding a displacement encoded in the instruction to the contents of register r5. The address calculation does not modify the contents of register r5.
LOADW 12(R5), R6

The following example calculates the address of a source operand by adding a displacement of 4 to the contents of a register pair (r5, r4) and loads this operand into the register pair (r7, r6). r7 receives the high word of the operand, and r6 receives the low word.
LOADD 4(r5, r4), (r7, r6)

Index Mode

In index mode, the operand address is calculated with a base address held in either R12 or R13. The CFG.SR bit must be clear to use this mode.

- For relative mode operands, the memory address is calculated by adding the value of a register pair and a displacement to the base address. The displacement can be a 14 or 20-bit unsigned value, which is encoded in the instruction.
- For absolute mode operands, the memory address is calculated by adding a 20-bit absolute address encoded in the instruction to the base address.
- In the following example, the operand address is the sum of the displacement 4, the contents of the register pair (r5,r4), and the base address held in register r12. The word at this address is loaded into register r6:

LOADW [r12]4(r5, r4), r6

Absolute Mode

In absolute mode, the operand is located in memory, and its address is encoded in the instruction (normally 20 or 24 bits). For example, the following instruction loads the byte at address 4000 into the lower 8 bits of register r6.
LOADB 4000, r6

For additional information on the addressing modes, see the *CompactRISC CR16C Programmer's Reference Manual.*

5.6 STACKS

A stack is a last-in, first-out data structure for dynamic storage of data and addresses. A stack consists of a block of memory used to hold the data and a pointer to the top of the stack. As more data is pushed onto a stack, the stack grows downward in memory. The CR16C supports two types of stacks: the interrupt stack and program stacks.

5.6.1 Interrupt Stack

The processor uses the interrupt stack to save and restore the program state during the exception handling. Hardware automatically pushes this data onto the interrupt stack before entering an exception handler. When the exception handler returns, hardware restores the processor state with data popped from the interrupt stack. The interrupt stack pointer is held in the ISP register.

5.6.2 Program Stack

The program stack is normally used by software to save and restore register values on subroutine entry and exit, hold local and temporary variables, and hold parameters passed between the calling routine and the subroutine. The only hardware mechanisms which operate on the program stack are the PUSH, POP, and POPRET instructions.

5.6.3 User and Supervisor Stack Pointers

To support multitasking operating systems, support is provided for two program stack pointers: a user stack pointer and a supervisor stack pointer. When the PSR.U bit is clear, the SP register is used for all program stack operations. This is the default mode when the user/supervisor protection mechanism is not used, and it is the supervisor mode when protection is used.

When the PSR.U bit is set, the processor is in user mode, and the USP register is used as the program stack pointer. User mode can only be entered using the JUSR instruction, which performs a jump and sets the PSR.U bit. User mode is exited when an exception is taken and re-entered when the exception handler returns. In user mode, the LPRD instruction cannot be used to change the state of processor registers (such as the PSR).

5.7 INSTRUCTION SET

Table 5-1 lists the operand specifiers for the instruction set, and Table 5-2 is a summary of all instructions. For each instruction, the table shows the mnemonic and a brief description of the operation performed.

In the mnemonic column, the lower-case letter “i” is used to indicate the type of integer that the instruction operates on, either “B” for byte or “W” for word. For example, the notation ADDi for the “add” instruction means that there are two forms of this instruction, ADDB and ADDW, which operate on bytes and words, respectively.

Similarly, the lower-case string “cond” is used to indicate the type of condition tested by the instruction. For example, the notation Jcond represents a class of conditional jump instructions: JEQ for Jump on Equal, JNE for Jump on Not Equal, and so on. For detailed information on all instructions, see the *CompactRISC CR16C Programmer's Reference Manual.*

Table 5-1. Key to Operand Specifiers

Operand Specifier	Description
abs	Absolute address
disp	Displacement (numeric suffix indicates number of bits)
imm	Immediate operand (numeric suffix indicates number of bits)
Iposition	Bit position in memory
Rbase	Base register (relative mode)
Rdest	Destination register
Rindex	Index register
RPbase, RPbasex	Base register pair (relative mode)
RPdest	Destination register pair
RPlink	Link register pair
Rposition	Bit position in register
Rproc	16-bit processor register
Rprocd	32-bit processor register
RPsrc	Source register pair
RPtarget	Target register pair
Rsrc, Rsrc1, Rsrc2	Source register

Copyright © 2007–2013, Texas Instruments Incorporated

Table 5-2. Instruction Set Summary

Mnemonic	Operands	Description
MOVi	Rsrc/imm, Rdest	Move
MOVXB	Rsrc, Rdest	Move with sign extension
MOVZB	Rsrc, Rdest	Move with zero extension
MOVXW	Rsrc, RPdest	Move with sign extension
MOVZW	Rsrc, RPdest	Move with zero extension
MOVD	imm, RPdest	Move immediate to register-pair
	RPsrc, RPdest	Move between register-pairs
ADD[U]i	Rsrc/imm, Rdest	Add
ADDCi	Rsrc/imm, Rdest	Add with carry
ADDD	RPsrc/imm, RPdest	Add with RP or immediate
MACQWa	Rsrc1, Rsrc2, RPdest	Multiply signed Q15: RPdest := RPdest + (Rsrc1 × Rsrc2)
MACSWa	Rsrc1, Rsrc2, RPdest	Multiply signed and add result: RPdest := RPdest + (Rsrc1 × Rsrc2)
MACUWa	Rsrc1, Rsrc2, RPdest	Multiply unsigned and add result: RPdest := RPdest + (Rsrc1 × Rsrc2)
MULi	Rsrc/imm, Rdest	Multiply: Rdest(8) := Rdest(8) × Rsrc(8)/imm Rdest(16) := Rdest(16) × Rsrc(16)/imm
MULSB	Rsrc, Rdest	Multiply: Rdest(16) := Rdest(8) × Rsrc(8)
MULSW	Rsrc, RPdest	Multiply: RPdest := RPdest(16) × Rsrc(16)
MULUW	Rsrc, RPdest	Multiply: RPdest := RPdest(16) × Rsrc(16);
SUBi	Rsrc/imm, Rdest	Subtract: (Rdest := Rdest - Rsrc/imm)
SUBD	RPsrc/imm, RPdest	Subtract: (RPdest := RPdest - RPsrc/imm)
SUBCi	Rsrc/imm, Rdest	Subtract with carry: (Rdest := Rdest - Rsrc/imm)
CMPi	Rsrc/imm, Rdest	Compare Rdest - Rsrc/imm
CMPD	RPsrc/imm, RPdest	Compare RPdest - RPsrc/imm
BEQ0i	Rsrc, disp	Compare Rsrc to 0 and branch if EQUAL
BNE0i	Rsrc, disp	Compare Rsrc to 0 and branch if NOT EQUAL
ANDi	Rsrc/imm, Rdest	Logical AND: Rdest := Rdest & Rsrc/imm
ANDD	RPsrc/imm, RPdest	Logical AND: RPdest := RPsrc & RPsrc/imm
ORi	Rsrc/imm, Rdest	Logical OR: Rdest := Rdest | Rsrc/imm
ORD	RPsrc/imm, RPdest	Logical OR: Rdest := RPdest | RPsrc/imm
Scond	Rdest	Save condition code as boolean
XORi	Rsrc/imm, Rdest	Logical exclusive OR: Rdest := Rdest ^ Rsrc/imm
XORD	RPsrc/imm, RPdest	Logical exclusive OR: Rdest := RPdest ^ RPsrc/imm
ASHUi	Rsrc/imm, Rdest	Arithmetic left/right shift
ASHUD	Rsrc/imm, RPdest	Arithmetic left/right shift
LSHi	Rsrc/imm, Rdest	Logical left/right shift
LSHD	Rsrc/imm, RPdest	Logical left/right shift
SBITi	Iposition, disp(Rbase)	Set a bit in memory (Because this instruction treats the destination as a readmodify-write operand, it not be used to set bits in writeonly registers.)
	Iposition, disp(RPbase)	
	Iposition, (Rindex)disp(RPbasex)	
	Iposition, abs	
	Iposition, (Rindex)abs	

Table 5-2. Instruction Set Summary (continued)

Mnemonic	Operands	Description
CBITi	Iposition, disp(Rbase)	Clear a bit in memory
	Iposition, disp(RPbase)	
	Iposition, (Rindex)disp(RPbasex)	
	Iposition, abs	
	Iposition, (Rindex)abs	
TBIT TBITi	Rposition/imm, Rsrc	Test a bit in a register Test a bit in memory
	Iposition, disp(Rbase)	
	Iposition, disp(RPbase)	
	Iposition, (Rindex)disp(RPbasex)	
	Iposition, abs	
	Iposition, (Rindex)abs	
LPR	Rsrc, Rproc	Load processor register
LPRD	RPsrc, Rprocd	Load double processor register
SPR	Rproc, Rdest	Store processor register
SPRD	Rprocd, RPdest	Store 32-bit processor register
Bcond	disp9	Conditional branch
	disp17	
	disp24	
BAL	RPlink, disp24	Branch and link
BR	disp9	Branch
	disp17	
	disp24	
EXCP	vector	Trap (vector)
Jcond	RPtarget	Conditional Jump to a large address
JAL	RA, RPtarget,	Jump and link to a large address
	RPlink, RPtarget	
JUMP	RPtarget	Jump
JUSR	RPtarget	Jump and set PSR.U
RETX		Return from exception
PUSH	imm, Rsrc, RA	Push “imm” number of registers on user stack, starting with Rsrc and possibly including RA
POP	imm, Rdest, RA	Restore “imm” number of registers from user stack, starting with Rdest and possibly including RA
POPRET	imm, Rdest, RA	Restore registers (similar to POP) and JUMP RA
LOADi	disp(Rbase), Rdest	Load (register relative)
	abs, Rdest	Load (absolute)
	(Rindex)abs, Rdest	Load (absolute index relative)
	(Rindex)disp(RPbasex), Rdest	Load (register relative index)
	disp(RPbase), Rdest	Load (register pair relative)
LOADD	disp(Rbase), Rdest	Load (register relative)
	abs, Rdest	Load (absolute)
	(Rindex)abs, Rdest	Load (absolute index relative)
	(Rindex)disp(RPbasex), Rdest	Load (register pair relative index)
	disp(RPbase), Rdest	Load (register pair relative)

Copyright © 2007–2013, Texas Instruments Incorporated

Table 5-2. Instruction Set Summary (continued)

Mnemonic	Operands	Description
STORi	Rsrc, disp(Rbase)	Store (register relative)
	Rsrc, disp(RPbase)	Store (register pair relative)
	Rsrc, abs	Store (absolute)
	Rsrc, (Rindex)disp(RPbasex)	Store (register pair relative index)
	Rsrc, (Rindex)abs	Store (absolute index)
STORD	RPsrc, disp(Rbase)	Store (register relative)
	RPsrc, disp(RPbase)	Store (register pair relative)
	RPsrc, abs	Store (absolute)
	RPsrc, (Rindex)disp(RPbasex)	Store (register pair index relative)
	RPsrc, (Rindex)abs	Store (absolute index relative)
STOR IMM	imm4, disp(Rbase)	Store unsigned 4-bit immediate value extended to operand length in memory
	imm4, disp(RPbase)	
	imm4, (Rindex)disp(RPbasex)	
	imm4, abs	
	imm4, (Rindex)abs	
LOADM	imm3	Load 1 to 8 registers (R2-R5, R8-R11) from memory starting at (R0)
LOADMP	imm3	Load 1 to 8 registers (R2-R5, R8-R11) from memory starting at (R1, R0)
STORM	STORM imm3	Store 1 to 8 registers (R2-R5, R8-R11) to memory starting at (R2)
STORMP	imm3	Store 1 to 8 registers (R2-R5, R8-R11) to memory starting at (R7,R6)
DI		Disable maskable interrupts
EI		Enable maskable interrupts
EIWAIT		Enable maskable interrupts and wait for interrupt
NOP		No operation
WAIT		Wait for interrupt

6 MEMORY

The CP3BT26 supports a uniform 16M-byte linear address space. Table 6-1 lists the types of memory and peripherals that occupy this memory space. Unlisted address ranges are reserved and must not be read or written. The BIU zones are regions of the address space that share the same control bits in the Bus Interface Unit (BIU).

Table 6-1. CP3BT26 Memory Map

Start Address	End Address	Size in Bytes	Description	BIU Zone
00 0000h	03 FFFFh	256K	On-chip Flash Program Memory, including Boot Memory	Static Zone 0 (mapped internally in IRE and ERE mode; mapped to the external bus in DEV mode)
04 0000h	0C FFFFh	576K	Reserved	
0D 0000h	0D 1FFFh	8K	On-chip Flash Data Memory	
0D 2000h	0D FFFFh	56K	Reserved	
0E 0000h	0E 7FFFh	32K	System RAM	N/A
0E 8000h	0E 91FFh	4.5K	Bluetooth Data RAM	
0E 9200h	0E E7FFh	21.5K	Reserved	
OE E800h	0E EBFFh	1K	Bluetooth Lower Link Controller Sequencer RAM	
OE EC00h	0E EFFFh	1K	Reserved	
OE F000h	0E F13Fh	320	CAN Buffers and Registers	
0E F140h	0E F17Fh	64	Reserved	
0E F180h	0E F1FFh	128	Bluetooth Lower Link Controller Registers	
0E F200h	0F FFFFh	67K	Reserved	
10 0000h	3F FFFFh	3072K	Reserved	
40 0000h	7F FFFFh	4096K	External Memory Zone 1	Static Zone 1
80 0000h	FE FFFFh	8128K	External Memory Zone 2	Static Zone 2
FF 0000h	FF F1FFh	61952	Reserved	
FF F200h	FF F5FFh	1K	Peripherals and Other I/O Ports	N/A
FF F600h	FF FAFFh	1280	BIU, DMA, Flash interfaces	IN/A
FF FB00h	FF FBFFh	256	I/O Expansion	I/O Zone
FF FC00h	FF FFFFh	1K	Peripherals and Other I/O Ports	N/A

6.1 OPERATING ENVIRONMENT

The operating environment controls whether external memory is supported and whether the reset vector jumps to a code space intended to support In-System Programming (ISP). Up to 12M of external memory space is available.

The operating mode of the device is controlled by the states on the ENV[2:0] pins at reset and the states of the EMPTY bits in the Protection Word, as shown in Table 6-2. Internal pullups on the ENV[2:0] pins select IRE mode or ISP mode if these pins are allowed to float.

When ENV[2:0] = 111b, IRE mode is selected unless the EMPTY bits in the Protection word indicate that the program flash memory is empty (unprogrammed), in which case ISP mode is selected. When ENV[2:0] = 011b, ERE mode is selected unless the EMPTY bits indicate that the program flash memory is empty, in which case ISP mode is selected. When ENV[2:0] = 110b, ISP mode is selected without regard to the states of the EMPTY bits. See Section 8.4.2 for more details.

In the DEV environment, the on-chip flash memory is disabled, and the corresponding region of the address space is mapped to external memory. DEVINT mode is equivalent to DEV mode but maps static memory zone 0 to the on-chip memory.

Copyright © 2007–2013, Texas Instruments Incorporated

Table 6-2. Operating Environment Selection

ENV[2:0]	EMPTY	Operating Environment
111	No	Internal ROM enabled (IRE) mode
011	No	External ROM enabled (ERE) mode
000	N/A	Development (DEV) mode
001	N/A	Development (DEVINT) mode with internal memory
110	N/A	In-System-Programming (ISP) mode
111	Yes	In-System-Programming (ISP) mode
011	Yes	In-System-Programming (ISP) mode

6.2 BUS INTERFACE UNIT (BIU)

The BIU controls the interface between the CPU core bus and those on-chip modules which are mapped into BIU zones. These on-chip modules are the flash program memory and the I/O zone. The BIU controls the configured parameters for bus access (such as the number of wait states for memory access) and issues the appropriate bus signals for the requested access.

6.3 BUS CYCLES

There are four types of data transfer bus cycles:

- Normal read
- Fast read
- Early write
- Late write

The type of data cycle used in a particular transaction depends on the type of CPU operation (a write or a read), the type of memory or I/O being accessed, and the access type programmed into the BIU control registers (early/late write or normal/fast read).

For read operations, a basic normal read takes two clock cycles, and a fast-read bus cycle takes one clock cycle. Normal read bus cycles are enabled by default after reset.

For write operations, a basic late-write bus cycle takes two clock cycles, and a basic early-write bus cycle takes three clock cycles. Early-write bus cycles are enabled by default after reset. However, late-write bus cycles are needed for ordinary write operations, so this configuration must be changed by software (see Section 6.4.1).

In certain cases, one or more additional clock cycles are added to a bus access cycle. There are two types of additional clock cycles for ordinary memory accesses, called internal wait cycles (TIW) and hold (T_{hold}) cycles.

A wait cycle is inserted in a bus cycle just after the memory address has been placed on the address bus. This gives the accessed memory more time to respond to the transaction request.

A hold cycle is inserted at the end of a bus cycle. This holds the data on the data bus for an extended number of clock cycles.

6.4 BIU CONTROL REGISTERS

The BIU has a set of control registers that determine how many wait cycles and hold cycles are to be used for accessing memory. During initialization of the system, these registers should be programmed with appropriate values so that the minimum allowable number of cycles is used. This number varies with the clock frequency.

Copyright © 2007–2013, Texas Instruments Incorporated

There are five BIU control registers, as listed in Table 6-3. These registers control the bus cycle configuration used for accessing the various on-chip memory types.

Table 6-3. Bus Control Registers

Name	Address	Description
BCFG	FF F900h	BIU Configuration Register
IOCFG	FF F902h	I/O Zone Configuration Register
SZCFG0	FF F904h	Static Zone 0 Configuration Register
SZCFG1	FF F906h	Static Zone 1 Configuration Register
SZCFG2	FF F908h	Static Zone 2 Configuration Register

6.4.1 BIU Configuration Register (BCFG)

The BCFG register is a byte-wide, read/write register that selects early-write or late-write bus cycles. At reset, the register is initialized to 07h. The register format is shown below.

7	6	5	4	3	2	1	0
Reserved					1	1	EWR

EWR The Early Write bit controls write cycle timing.
0 – Late-write operation (2 clock cycles to write).
1 – Early-write operation.

At reset, the BCFG register is initialized to 07h, which selects early-write operation. However, late-write operation is required for normal device operation, so software must change the register value to 06h. Bits 1 and 2 of this register must always be set when writing to this register.

6.4.2 I/O Zone Configuration Register (IOCFG)

The IOCFG register is a word-wide, read/write register that controls the timing and bus characteristics of accesses to the 256-byte I/O Zone memory space (FF FB00h to FF FBFFh). The registers associated with Port B and Port C reside in the I/O memory array. At reset, the register is initialized to 069Fh. The register format is shown below.

7	6	5	4	3	2		0
BW	Reserved		HOLD		WAIT		

15					10	9	8
Reserved						IPST	Res.

WAIT The Memory Wait Cycles field specifies the number of TIW (internal wait state) clock cycles added for each memory access, ranging from 000 binary for no additional TIW wait cycles to 111 binary for seven additional TIW wait cycles.

HOLD The Memory Hold Cycles field specifies the number of T_{hold} clock cycles used for each memory access, ranging from 00b for no T_{hold} cycles to 11b for three T_{hold} clock cycles.

BW The Bus Width bit defines the bus width of the IO Zone.
0 – 8-bit bus width.
1 – 16-bit bus width (default)

IPST The Post Idle bit controls whether an idle cycle follows the current bus cycle, when the next bus cycle accesses a different zone. No idle cycles are required for on-chip accesses.
0 – No idle cycle (recommended).
1 – Idle cycle.

Copyright © 2007–2013, Texas Instruments Incorporated

6.4.3 Static Zone 0 Configuration Register (SZCFG0)

The SZCFG0 register is a word-wide, read/write register that controls the timing and bus characteristics of Zone 0 memory accesses. Zone 0 is used for the on-chip flash memory (including the boot area, program memory, and data memory).

At reset, the register is initialized to 069Fh. The register format is shown below.

7	6	5	4	3	2		0
BW	WBR	RBE	HOLD		WAIT		

15	12	11	10	9	8
Reserved		FRE	IPRE	IPST	Res.

WAIT	The Memory Wait field specifies the number of TIW (internal wait state) clock cycles added for each memory access, ranging from 000b for no additional TIW wait cycles to 111b for seven additional TIW wait cycles. These bits are ignored if the SZCFG0.FRE bit is set.
HOLD	The Memory Hold field specifies the number of T_{hold} clock cycles used for each memory access, ranging from 00b for no T_{hold} cycles to 11b for three T_{hold} clock cycles. These bits are ignored if the SZCFG0.FRE bit is set.
RBE	The Read Burst Enable enables burst cycles on 16-bit reads from 8-bit bus width regions of the address space. Because the flash program memory is required to be 16-bit bus width, the RBE bit is a don't care bit. This bit is ignored when the SZCFG0.FRE bit is set. 0 – Burst read disabled. 1 – Burst read enabled.
WBR	The Wait on Burst Read bit controls if a wait state is added on burst read transaction. This bit is ignored, when SZCFG0.FRE bit is set or when SZCFG0.RBE is clear. 0 – No TBW on burst read cycles. 1 – One TBW on burst read cycles.
BW	The Bus Width bit controls the bus width of the zone. The flash program memory must be configured for 16-bit bus width. 0 – 8-bit bus width. 1 – 16-bit bus width (required).
FRE	The Fast Read Enable bit controls whether fast read bus cycles are used. A fast read operation takes one clock cycle. A normal read operation takes at least two clock cycles. 0 – Normal read cycles. 1 – Fast read cycles.
IPST	The Post Idle bit controls whether an idle cycle follows the current bus cycle, when the next bus cycle accesses a different zone. No idle cycles are required for on-chip accesses. 0 – No idle cycle (recommended). 1 – Idle cycle inserted.
IPRE	The Preliminary Idle bit controls whether an idle cycle is inserted prior to the current bus cycle, when the new bus cycle accesses a different zone. No idle cycles are required for on-chip accesses. 0 – No idle cycle (recommended). 1 – Idle cycle inserted.

Copyright © 2007–2013, Texas Instruments Incorporated

6.4.4 Static Zone 1 Configuration Register (SZCFG1)

The SZCFG1 register is a word-wide, read/write register that controls the timing and bus characteristics for off-chip accesses selected with the $\overline{SEL1}$ output signal.

At reset, the register is initialized to 069Fh. The register format is shown below.

7	6	5	4	3	2		0
BW	WBR	RBE	HOLD		WAIT		

15	12	11	10	9	8
Reserved		FRE	IPRE	IPST	Res.

WAIT	The Memory Wait field specifies the number of TIW (internal wait state) clock cycles added for each memory access, ranging from 000b for no additional TIW wait cycles to 111b for seven additional TIW wait cycles. These bits are ignored if the SZCFG1.FRE bit is set.
HOLD	The Memory Hold field specifies the number of T_{hold} clock cycles used for each memory access, ranging from 00b for no T_{hold} cycles to 11b for three T_{hold} clock cycles. These bits are ignored if the SZCFG1.FRE bit is set.
RBE	The Read Burst Enable enables burst cycles on 16-bit reads from 8-bit bus width regions of the address space. This bit is ignored when the SZCFG1.FRE bit is set or the SZCFG1.BW is clear. 0 – Burst read disabled. 1 – Burst read enabled.
WBR	The Wait on Burst Read bit controls if a wait state is added on burst read transaction. This bit is ignored, when SZCFG1.FRE bit is set or when SZCFG1.RBE is clear. 0 – No TBW on burst read cycles. 1 – One TBW on burst read cycles.
BW	The Bus Width bit controls the bus width of the zone. 0 – 8-bit bus width. 1 – 16-bit bus width.
FRE	The Fast Read Enable bit controls whether fast read bus cycles are used. A fast read operation takes one clock cycle. A normal read operation takes at least two clock cycles. 0 – Normal read cycles. 1 – Fast read cycles.
IPST	The Post Idle bit controls whether an idle cycle follows the current bus cycle, when the next bus cycle accesses a different zone. 0 – No idle cycle. 1 – Idle cycle inserted.
IPRE	The Preliminary Idle bit controls whether an idle cycle is inserted prior to the current bus cycle, when the new bus cycle accesses a different zone. 0 – No idle cycle. 1 – Idle cycle inserted.

Copyright © 2007–2013, Texas Instruments Incorporated

6.4.5 Static Zone 2 Configuration Register (SZCFG2)

The SZCFG2 register is a word-wide, read/write register that controls the timing and bus characteristics for off-chip accesses selected with the $\overline{SEL2}$ output signal.

At reset, the register is initialized to 069Fh. The register format is shown below.

7	6	5	4	3	2		0
BW	WBR	RBE	HOLD WAIT		WAIT		

15	12	11	10	9	8
Reserved		FRE	IPRE	IPST	Res.

WAIT	The Memory Wait field specifies the number of TIW (internal wait state) clock cycles added for each memory access, ranging from 000b for no additional TIW wait cycles to 111b for seven additional TIW wait cycles. These bits are ignored if the SZCFG2.FRE bit is set.
HOLD	The Memory Hold field specifies the number of T_{hold} clock cycles used for each memory access, ranging from 00b for no T_{hold} cycles to 11b for three T_{hold} clock cycles. These bits are ignored if the SZCFG2.FRE bit is set.
RBE	The Read Burst Enable enables burst cycles on 16-bit reads from 8-bit bus width regions of the address space. This bit is ignored when the SZCFG2.FRE bit is set or the SZCFG2.BW is clear. 0 – Burst read disabled. 1 – Burst read enabled.
WBR	The Wait on Burst Read bit controls if a wait state is added on burst read transaction. This bit is ignored, when SZCFG2.FRE bit is set or when SZCFG2.RBE is clear. 0 – No TBW on burst read cycles. 1 – One TBW on burst read cycles.
BW	The Bus Width bit controls the bus width of the zone. 0 – 8-bit bus width. 1 – 16-bit bus width.
FRE	The Fast Read Enable bit controls whether fast read bus cycles are used. A fast read operation takes one clock cycle. A normal read operation takes at least two clock cycles. 0 – Normal read cycles. 1 – Fast read cycles.
IPST	The Post Idle bit controls whether an idle cycle follows the current bus cycle, when the next bus cycle accesses a different zone. 0 – No idle cycle. 1 – Idle cycle inserted.
IPRE	The Preliminary Idle bit controls whether an idle cycle is inserted prior to the current bus cycle, when the new bus cycle accesses a different zone. 0 – No idle cycle. 1 – Idle cycle inserted.

Copyright © 2007–2013, Texas Instruments Incorporated

6.5 WAIT AND HOLD STATES

The number of wait cycles and hold cycles inserted into a bus cycle depends on whether it is a read or write operation, the type of memory or I/O being accessed, and the control register settings.

6.5.1 Flash Program/Data Memory

When the CPU accesses the Flash program and data memory (address ranges 000000h–03FFFFh and 0E0000h– 0E1FFFh), the number of added wait and hold cycles depends on the type of access and the BIU register settings.

In fast-read mode (SZCFG0.FRE=1), a read operation is a single cycle access. This limits the maximum CPU operating frequency to 24 MHz.

For a read operation in normal-read mode (SZCFG0.FRE=0), the number of inserted wait cycles is specified in the SZCFG0.WAIT field. The total number of wait cycles is the value in the WAIT field plus 1, so it can range from 1 to 8. The number of inserted hold cycles is specified in the SCCFG0.HOLD field, which can range from 0 to 3.

For a write operation in fast read mode (SZCFG0.FRE=1), the number of inserted wait cycles is 1. No hold cycles are used.

For a write operation normal read mode (SZCFG0.FRE=0), the number of wait cycles is equal to the value written to the SZCFG0.WAIT field plus 1 (in the late write mode) or 2 (in the early write mode). The number of inserted hold cycles is equal to the value written to the SCCFG0.HOLD field, which can range from 0 to 3.

6.5.2 RAM Memory

Read and write accesses to on-chip RAM is performed within a single cycle, without regard to the BIU settings. The RAM address is in the range of 0E 0000h–0E 7FFFh and 0E 8000h–0E 91FFh.

6.5.3 Access to Peripherals

When the CPU accesses on-chip peripherals in the range of 0E F000h–0E F1FFh and FF 0000h–FF FBFFh, one wait cycle and one preliminary idle cycle is used. No hold cycles are used. The IOCFG register determines the access timing for the address range FF FB00h–FF FBFFh.

Copyright © 2007–2013, Texas Instruments Incorporated

7 SYSTEM CONFIGURATION REGISTERS

The system configuration registers control and provide status for certain aspects of device setup and operation, such as indicating the states sampled from the ENV[2:0] inputs. The system configuration registers are listed in Table 7-1.

Table 7-1. System Configuration Registers

Name	Address	Description
MCFG	FF F910h	Module Configuration Register
MSTAT	FF F914h	Module Status Register

7.1 MODULE CONFIGURATION REGISTER (MCFG)

The MCFG register is a byte-wide, read/write register that selects the clock output features of the device.

At reset, the register bits are cleared except for the USB_ENABLE bit, which is set. Initialization software must write a specific value to this register to enable the SCLK, MCLK, output pin function.

The register must be written in active mode only, not in power save, HALT, or IDLE mode. However, the register contents are preserved during all power modes.

The MCFG register format is shown below.

7	6	5	4	3	2	1	0
Res.	MEM_IO_SPEED	MISC_IO_SPEED	USB_ENABLE	SCLKOE	MCLKOE	PLLCLKOE	EXIOE

EXIOE	The EXIOE bit controls whether the external bus is enabled in the IRE environment for implementing the I/O Zone (FF FB00h–FF FBFFh). 0 – External bus disabled. 1 – External bus enabled.
PLLCLKOE	The PLLCLKOE bit controls whether the PLL clock is driven on the ENV0/PLLCLK pin. 0 – ENV0/PLLCLK pin is high impedance. 1 – PLL clock driven on the ENV0/PLLCLK pin.
MCLKOE	The MCLKOE bit controls whether the Main Clock is driven on the ENV1/CPUCLK pin. 0 – ENV1/CPUCLK pin is high impedance. 1 – Main Clock is driven on the ENV1/CPUCLK pin.
SCLKOE	The SCLKOE bit controls whether the Slow Clock is driven on the ENV2/SLOWCLK pin. 0 – ENV2/SLOWCLK pin is high impedance. 1 – Slow Clock is driven on the ENV2/SLOWCLK pin.
USB_ENABLE	The USB_ENABLE bit can be used to force an external USB transceiver into its low-power mode. The power mode is dependent on the USB controller status, the USB_ENABLE bit in the Function Word (see Section 8.4.1), and the USB_ENABLE bit in the MCFG register. 0 – External USB transceiver forced into low- power mode. 1 – Transceiver power mode dependent on USB controller status and programming of the Function Word. (This is the state of the USB_ENABLE bit after reset.)
MISC_IO_SPEED	The MISC_IO_SPEED bit controls the slew rate of the output drivers for the ENV[2:0], $\overline{\text{RDY}}$, RFDATA, and TDO pins. To minimize noise, the slow slew rate is recommended. 0 – Fast slew rate. 1 – Slow slew rate.
MEM_IO_SPEED	The MEM_IO_SPEED bit controls the slew rate of the output drivers for the A[22:0], $\overline{\text{RD}}$, $\overline{\text{SEL[2:0]}}$, $\overline{\text{SELIO}}$, $\overline{\text{WR[1:0]}}$, PB[7:0], and PC[7:0] pins. Memory speeds for the CP3BT26 are characterized with fast slew rate. Slow slew rate reduces the available memory access time by 5 ns. 0 – Fast slew rate. 1 – Slow slew rate.

7.2 MODULE STATUS REGISTER (MSTAT)

The MSTAT register is a byte-wide, read-only register that indicates the general status of the device. The MCFG register format is shown below.

7	6	5	4	3	2	0
ISPRST	WDRST	Res.	DPGMBUSY	PGMBUSY	OENV2:0	

OENV2:0	The Operating Environment bits hold the states sampled from the ENV[2:0] input pins at reset. These states are controlled by external hardware at reset and are held constant in the register until the next reset.
PGMBUSY	The Flash Programming Busy bit is automatically set when either the program memory or the data memory is being programmed or erased. It is clear when neither of the memories is busy. When this bit is set, software must not attempt to program or erase either of these two memories. This bit is a copy of the FMBUSY bit in the FMSTAT register. 0 – Flash memory is not busy. 1 – Flash memory is busy.
DPGMBUSY	The Data Flash Programming Busy indicates that the flash data memory is being erased or a pipelined programming sequence is currently ongoing. Software must not attempt to perform any write access to the flash program memory at this time, without also polling the FSMSTAT.FMFULL bit in the flash memory interface. The DPGMBUSY bit is a copy of the FMBUSY bit in the FSMSTAT register. 0 – Flash data memory is not busy. 1 – Flash data memory is busy.
WDRST	The Watchdog Reset bit indicates that a Watchdog timer reset has occurred. Write a 1 to this bit to clear it. Power-on reset or external reset also clear this bit. 0 – No Watchdog timer reset has occurred since this bit was last cleared. 1 – A Watchdog timer reset has occurred since this bit was last cleared.
ISPRST	The Software ISP Reset bit indicates that a software ISP reset has occurred since the bit was last cleared. This bit is cleared by a SWRESET(CLR) sequence, a power-on reset, or an external reset. 0 – No software ISP reset has occurred since this bit was last cleared. 1 – A software ISP reset has occurred since this bit was last cleared.

7.3 SOFTWARE RESET REGISTER (SWRESET)

The SWRESET register is a byte-wide, write-only register which provides a mechanism for software to initiate a reset into ISP mode without regard to the status of the EMPTY bits in the flash protection word. This form of reset is only allowed when all of the following conditions are true:

- The device is in IRE or ERE mode
- BOOTAREA is defined (has a value other than 1111b) in the Protection Word (see Section 8.4.2 for more details).
- ISPE is set in the flash protection word, indicating that there is ISP code in the flash

To initiate a reset under these conditions, it is necessary to write the value E1h to the SWRESET register, followed within 127 clock cycles by the value 3Eh. The reset then follows immediately. This sequence is called SWRESET(ISP).

Once the device has been reset into ISP mode by SWRESET(ISP), any subsequent reset (other than internal or external power-on reset) will cause the part to reset into ISP mode because the EMPTY bits in the Protection Word continue to be ignored.

A second set of special values written to the SWRESET register will cause a reset out of ISP mode (whether or not the device is currently in ISP mode). This can be used as a simple software reset. In this case, no conditions are checked. To initiate reset out of ISP mode, write the value E1h to the SWRESET register, followed within 127 clock cycles by the value 0Eh. The reset then follows immediately. This sequence is called SWRESET(CLR). This reset also cancels the effect of any previous SWRESET(ISP), so subsequent resets will check the EMPTY bits to determine whether to enter ISP mode.

The ISP reset behaves similarly to the Watchdog reset, for example, if the flash interface is busy when reset is asserted, the reset to the clock module is delayed until the flash operations are completed.

Copyright © 2007–2013, Texas Instruments Incorporated

8 FLASH MEMORY

The system configuration registers control and provide status for certain aspects of device setup and operation, such as indicating the states sampled from the ENV[2:0] inputs. The system configuration registers are listed in Table 8-1.

A special protection scheme is applied to the lower portion of the flash program memory, called the Boot Area. The Boot Area always starts at address 0 and ranges up to a programmable end address. The maximum boot area address which can be selected is 00 77FFh. The intended use of this area is to hold In-System-Programming (ISP) routines or essential application routines. The Boot Area is always protected against CPU write access, to avoid unintended modifications.

The Code Area is intended to hold the application code and constant data. The Code Area begins with the next byte after the Boot Area. Table 8-1 summarizes the properties of the regions of flash memory mapped into the CPU address space.

Table 8-1. Flash Memory Areas

Area	Address Range	Read Access	Write Access
Boot Area	0–BOOTAREA - 1	Yes	No
Code Area	BOOTAREA–03 FFFFh	Yes	Write access only if section write enable bit is set and global write protection is disabled.
Data Area	0D 0000h–0D 1FFFh	Yes	Write access only if section write enable bit is set and global write protection is disabled.

8.1 FLASH MEMORY PROTECTION

The memory protection mechanisms provide both global and section-level protection. Section-level protection against CPU writes is applied to individual 8K-byte sections of the flash program memory and 512-byte sections of the flash data memory. Section-level protection is controlled through read/write registers mapped into the CPU address space. Global write protection is applied at the device level, to disable flash memory writes by the CPU. Global write protection is controlled by the encoding of bits stored in the flash memory array.

8.1.1 Section-Level Protection

Each bit in the Flash Memory Write Enable (FM0WER and FM1WER) registers enables or disables write access to a corresponding section of flash program memory. Write access to the flash data memory is controlled by the bits in the Flash Slave Memory Write Enable (FSM0WER) register. By default (after reset) all bits in the FM0WER, FM1WER, and FSM0WER registers are cleared, which disables write access by the CPU to all sections. Write access to a section is enabled by setting the corresponding write enable bit. After completing a programming or erase operation, software should clear all write enable bits to protect the flash program memory against any unintended writes.

8.1.2 Global Protection

The WRPROT field in the Protection Word controls global write protection. The Protection Word is located in a special flash memory outside of the CPU address space. If a majority of the bits in the 3-bit WRPROT field are clear, write protection is enabled. Enabling this mode prevents the CPU from writing to flash memory.

The RDPROT field in the Protection Word controls global read protection. If a majority of the bits in the 3-bit RDPROT field are clear, read protection is enabled. Enabling this mode prevents reading by an external debugger through the serial debug interface or by an external flash programmer. CPU read access is not affected by the RDPROT bits.

8.2 FLASH MEMORY ORGANIZATION

Each of the flash memories are divided into main blocks and information blocks. The main blocks hold the code or data used by application software. The information blocks hold factory parameters, protection settings, and other device-specific data. The main blocks are mapped into the CPU address space. The information blocks are accessed indirectly through a register-based interface. Separate sets of registers are provided for accessing flash program memory (FM registers) and flash data memory (FSM registers). The flash program memory consists of two main blocks and two data blocks, as shown in Table 8-2. The flash data memory consists of one main block and one information block.

Table 8-2. Flash Memory Blocks

Name	Address Range	Function
Main Block 0	00 0000h–01 FFFFh (CPU address space)	Flash Program Memory
Information Block 0	000h–07Fh (address register)	Function Word, Factory Parameters
Main Block 1	02 0000h–03 FFFFh (CPU address space)	Flash Program Memory
Information Block 1	080h–0FFh (address register)	Protection Word, User Data
Main Block 2	0D 0000h–0D 1FFFh (CPU address space)	Flash Data Memory
Information Block 2	000h–07Fh (address register)	User Data

8.2.1 Main Block 0 and 1

Main Block 0 and Main Block 1 hold the 256K-byte program space, which consists of the Boot Area and Code Area. Each block consists of sixteen 8K-byte sections. Write access by the CPU to Main Block 0 and Main Block 1 is controlled by the corresponding bits in the FM0WER and FM1WER registers, respectively. The least significant bit in each register controls the section at the lowest address.

8.2.2 Information Block 0

Information Block 0 contains 128 bytes, of which one 16-bit word has a dedicated function, called the Function Word. The Function Word resides at address 07Eh. It controls the power mode of an external USB transceiver. The remaining Information Block 0 locations are used to hold factory parameters.

Software only has read access to Information Block 0 through a register-based interface. The Function Word and the factory parameters are protected against CPU writes. Table 8-3 shows the structure of Information Block 0.

Table 8-3. Information Block 0

Name	Address Range	Read Access	Write Access
Function Word	07Eh-07Fh	Yes	No
Other (Used for factory Parameters)	000h-07Dh		

Copyright © 2007–2013, Texas Instruments Incorporated

8.2.3 Information Block 1

Information Block 1 contains 128 bytes, of which one 16-bit word has a dedicated function, called the Protection Word. The Protection Word resides at address 0FEh. It controls the global protection mechanisms and the size of the Boot Area. The Protection Word can be written by the CPU, however the changes only become valid after the next device reset. The remaining Information Block 1 locations can be used to store other user data. Erasing Information Block 1 also erases Main Block 1. Table 8-4 shows the structure of the Information Block 1.

Table 8-4. Information Block 1

Name	Address Range	Read Access	Write Access
Protection Word	0FEh–0FFh	Yes	Write access only if section write enable bit is set and global write protection is disabled.
Other (User Data)	080h–0FDh		

8.2.4 Main Block 2

Main Block 2 holds the 8K-byte data area, which consists of sixteen 512-byte sections. Write access by the CPU to Main Block 2 is controlled by the corresponding bits in the FSM0WER register. The least significant bit in the register controls the section at the lowest address.

8.2.5 Information Block 2

Information Block 2 contains 128 bytes, which can be used to store user data. The CPU can always read Information Block 2. The CPU can write Information Block 2 only when global write protection is disabled. Erasing Information Block 2 also erases Main Block 2.

8.3 FLASH MEMORY OPERATIONS

Flash memory programming (erasing and writing) can be performed on the flash data memory while the CPU is executing out of flash program memory. Although the CPU can execute out of flash data memory, it cannot erase or write the flash program memory while executing from flash data memory. To erase or write the flash program memory, the CPU must be executing from the on-chip static RAM or off-chip memory.

An erase operation is required before programming. An erase operation sets all of the bits in the erased region. A programming operation clears selected bits.

The programming mechanism is pipelined, so that a new write request can be loaded while a previous request is in progress. When the FMFULL bit in the FMSTAT or FSMSTAT register is clear, the pipeline is ready to receive a new request. New requests may be loaded after checking only the FMFULL bit.

8.3.1 Main Block Read

Read accesses from flash program memory can only occur when the flash program memory is not busy from a previous write or erase operation. Read accesses from the flash data memory can only occur when both the flash program memory and the flash data memory are not busy. Both byte and word read operations are supported.

8.3.2 Information Block Read

Information block data is read through the register-based interface. Only word read operations are supported and the read address must be word-aligned (LSB = 0). The following steps are used to read from an information block:

1. Load the word address in the Flash Memory Information Block Address (FMIBAR) or Flash Slave Memory Information Block Address (FSMIBAR) register.
2. Read the data word by reading out the Flash Memory Information Block Data (FMIBDR) or Flash Slave Memory Information Block Data (FSMIBDR) register.

8.3.3 Main Block Page Erase

A flash erase operation sets all of the bits in the erased region. Pages of a main block can be individually erased if their write enable bits are set. This method cannot be used to erase the boot area, if defined. Each page in Main Block 0 and 1 consists of 1024 bytes (512 words). Each page in Main Block 2 consists of 512 bytes (256 words). To erase a page, the following steps are performed:

1. Verify that the Flash Memory Busy (FMBUSY) bit in the FMSTAT or FSMSTAT register is clear.
2. Prevent accesses to the flash memory while erasing is in progress.
3. Set the Page Erase (PER) bit in the FMCTRL or FSMCTRL register.
4. Write to an address within the desired page.
5. Wait until the FMBUSY bit becomes clear again.
6. Check the Erase Error (EERR) bit in the FMSTAT or FSMSTAT register to confirm successful erase of the page.
7. Repeat steps 4 through 6 to erase additional pages.
8. Clear the PER bit.

8.3.4 Main Block Module Erase

A module erase operation can be used to erase an entire main block. All sections within the block must be enabled for writing. If a boot area is defined in the block, it cannot be erased. The following steps are performed to erase a main block:

1. Verify that the Flash Memory Busy (FMBUSY) bit in the FMSTAT or FSMSTAT register is clear.
2. Prevent accesses to the flash memory while erasing is in progress.
3. Set the Module Erase (MER) bit in the FMCTRL or FSMCTRL register.
4. Write to any address within the desired main block.
5. Wait until the FMBUSY bit becomes clear again.
6. Check the Erase Error (EERR) bit in the FMSTAT or FSMSTAT register to confirm successful erase of the block.
7. Clear the MER bit.

8.3.5 Information Block Module Erase

Erasing an information block also erases the corresponding main block. If a boot area is defined in the main block, neither block can be erased. Page erase is not supported for information blocks. The following steps are performed to erase an information block:

1. Verify that the Flash Memory Busy (FMBUSY) bit in the FMSTAT or FSMSTAT register is clear.
2. Prevent accesses to the flash memory while erasing is in progress.
3. Set the Module Erase (MER) bit in the FMCTRL or FSMCTRL register.
4. Load the FMIBAR or FSMIBAR register with any address within the block, then write any data to the FMIBDR or FSMIBDR register.
5. Wait until the FMBUSY bit becomes clear again.
6. Check the Erase Error (EERR) bit in the FMSTAT or FSMSTAT register to confirm successful erase of the block.
7. Clear the MER bit.

Copyright © 2007–2013, Texas Instruments Incorporated

8.3.6 Main Block Write

Writing is only allowed when global write protection is disabled. Writing by the CPU is only allowed when the write enable bit is set for the sector which contains the word to be written. The CPU cannot write the Boot Area. Only word-wide write access to word-aligned addresses is supported. The following steps are performed to write a word:

1. Verify that the Flash Memory Busy (FMBUSY) bit in the FMSTAT or FSMSTAT register is clear.
2. Prevent accesses to the flash memory while the write is in progress.
3. Set the Program Enable (PE) bit in the FMCTRL or FSMCTRL register.
4. Write a word to the desired word-aligned address. This starts a new pipelined programming sequence. The FMBUSY bit becomes set while the write operation is in progress. The FMFULL bit in the FMSTAT or FSMSTAT register becomes set if a previous write operation is still in progress.
5. Wait until the FMFULL bit becomes clear.
6. Repeat steps 4 and 5 for additional words.
7. Wait until the FMBUSY bit becomes clear again.
8. Check the programming error (PERR) bit in the FMSTAT or FSMSTAT register to confirm successful programming.
9. Clear the Program Enable (PE) bit.

8.3.7 Information Block Write

Writing is only allowed when global write protection is disabled. Writing by the CPU is only allowed when the write enable bit is set for the sector which contains the word to be written. The CPU cannot write Information Block 0. Only word-wide write access to word-aligned addresses is supported. The following steps are performed to write a word:

1. Verify that the Flash Memory Busy (FMBUSY) bit in the FMSTAT or FSMSTAT register is clear.
2. Prevent accesses to the flash memory while the write is in progress.
3. Set the Program Enable (PE) bit in the FMCTRL or FSMCTRL register.
4. Write the desired target address into the FMIBAR or FSMIBAR register.
5. Write the data word into the FMIBDR or FSMIBDR register. This starts a new pipelined programming sequence. The FMBUSY bit becomes set while the write operation is in progress. The FMFULL bit in the FMSTAT or FSMSTAT register becomes set if a previous write operation is still in progress.
6. Wait until the FMFULL bit becomes clear.
7. Repeat steps 4 through 6 for additional words.
8. Wait until the FMBUSY bit becomes clear again.
9. Check the programming error (PERR) bit in the FMSTAT or FSMSTAT register to confirm successful programming.
10. Clear the Program Enable (PE) bit.

Copyright © 2007–2013, Texas Instruments Incorporated

8.4 INFORMATION BLOCK WORDS

Two words in the information blocks are dedicated to hold settings that affect the operation of the system: the Function Word in Information Block 0 and the Protection Word in Information Block 1.

8.4.1 Function Word

The Function Word resides in the Information Block 0 at address 07Eh. At reset, the Function Word is copied into the FMAR0 register.

15 … 1	0
Reserved	USB_ENABLE

USB_ENABLE The USB_ENABLE bit can be used to force an external USB transceiver into its low-power mode. The power mode is dependent on the USB controller status, the USB_ENABLE bit in the MCFG register (see Section 7.1), and the USB_ENABLE bit in the Function Word.
0 – External USB transceiver forced into low power mode.
1 – Transceiver power mode dependent on USB controller status and programming of the Function Word.

8.4.2 Protection Word

The Protection Word resides in Information Block 1 at address 0FEh. At reset, the Protection Word is copied into the FMAR1 register.

15 … 13	12 … 10	9 … 7	6 … 4	3 … 1	0
WRPROT	RDPROT	ISPE	EMPTY	BOOTAREA	

BOOTAREA The BOOTAREA field specifies the size of the Boot Area. The Boot Area starts at address 0 and ends at the address specified by this field. The inverted bits of the BOOTAREA field count the number of 2048-byte blocks to be reserved as the Boot Area. The maximum Boot Area size is 30K bytes (address range 0 to 77FFh). The end of the Boot Area defines the start of the Code Area. If the device starts in ISP mode and there is no Boot Area defined (encoding 1111b), the device is kept in reset.

Copyright © 2007–2013, Texas Instruments Incorporated

Table 8-5 lists all possible boot area encodings.

Table 8-5. Boot Area Encodings

BOOT AREA	Size of the Boot Area	Code Area Start Address
1111	No Boot Area defined	00 0000h
1110	2K bytes	00 0800h
1101	4K bytes	00 1000h
1100	6K bytes	00 1800h
1011	8K bytes	00 2000h
1010	10K bytes	00 2800h
1001	12K bytes	00 3000h
1000	14K bytes	00 3800h
0111	16K bytes	00 4000h
0110	18K bytes	00 4800h
0101	20K bytes	00 5000h
0100	22K bytes	00 5800h
0011	24K bytes	00 6000h
0010	26K bytes	00 6800h
0001	28K bytes	00 7000h
0000	30K bytes	00 7800h

EMPTY — The EMPTY field indicates whether the flash program memory has been programmed or should be treated as blank. If a majority of the three EMPTY bits are clear, the flash program memory is treated as programmed. If a majority of the EMPTY bits are set, the flash program memory is treated as empty. If the ENV[1:0] inputs (see Section 6.1) are sampled high at reset and the EMPTY bits indicate the flash program memory is empty, the device will begin execution in ISP mode. The device enters ISP mode without regard to the EMPTY status if ENV0 is driven low and ENV1 is driven high.

ISPE — The ISPE field indicates whether the Boot Area is used to hold In-System-Programming routines or user application routines. If a majority of the three ISPE bits are set, the Boot Area is intended to store ISP routines. If majority of the ISPE bits are clear, the Boot Area holds user application routines. Table 8-6 summarizes all possible EMPTY, ISPE, and Boot Area settings and the corresponding start-up operation for each combination. In DEV mode, the EMPTY bit settings are ignored and the CPU always starts executing from address 0.

Copyright © 2007–2013, Texas Instruments Incorporated

Table 8-6. CPU Reset Behavior

EMPTY	ISPE	Boot Area	Start-Up Operation
Not Empty	ISP	Defined	Device starts in IRE/ ERE mode from Code Area start address
Not Empty	ISP	Not Defined	Device starts in IRE/ ERE mode from Code Area start address
Not Empty	No ISP	Don't Care	Device starts in IRE/ ERE mode from address 0
Empty	ISP	Defined	Device starts in ISP mode from Code Area start address
Empty	ISP	Not Defined	Device starts in ISP mode and is kept in its reset state
Empty	No ISP	Don't Care	

RDPROT The RDPROT field controls the global read protection mechanism for the on-chip flash program memory. If a majority of the three RDPROT bits are clear, the flash program memory is protected against read access from the serial debug interface or an external flash programmer. CPU read access is not affected by the RDPROT bits. If a majority of the RDPROT bits are set, read access is allowed.

WRPROT The WRPROT field controls the global write protection mechanism for the on-chip flash program memory. If a majority of the three WRPROT bits are clear, the flash program memory is protected against write access from any source and read access from the serial debug interface. If a majority of the WRPROT bits are set, write access is allowed.

8.5 FLASH MEMORY INTERFACE REGISTERS

There is a separate interface for the program flash and data flash memories. The same set of registers exist in both interfaces. In most cases they are independent of each other, but in some cases the program flash interface controls the interface for both memories, as indicated in the following sections. Table 8-7 lists the registers.

Table 8-7. Flash Memory Interface Registers

Program Memory	Data Memory	Description
FMIBAR FF F940h	FSMIBAR FF F740h	Flash Memory Information Block Address Register
FMIBDR FF F942h	FSMIBDR FF F742h	Flash Memory Information Block Address Register
FM0WER FF F944h	FSM0WER FF F744h	Flash Memory 0 Write Enable Register
FM1WER FF F946h	N/A	Flash Memory 1 Write Enable Register
FMCTRL FF F94Ch	FSMCTRL FF F74Ch	Flash Memory Control Register
FMSTAT FF F94Eh	FSMSTAT FF F74Eh	Flash Memory Status Register
FMPSR FF F950h	FSMPSR FF F750h	Flash Memory Prescaler Register
FMSTART FF F952h	FSMSTART FF F752h	Flash Memory Start Time Reload Register
FMTRAN FF F954h	FSMTRAN FF F754h	Flash Memory Transition Time Reload Register
FMPROG FF F956h	FSMPROG FF F756h	Flash Memory Programming Time Reload Register
FMPERASE FF F958h	FSMPERASE FF F758h	Flash Memory Page Erase Time Reload Register
FMMERASE0 FF F95Ah	FSMMERASE0 FF F75Ah	Flash Memory Module Erase Time Reload Register 0
FMEND FF F95Eh	FSMEND FF F75Eh	Flash Memory End Time Reload Register

Copyright © 2007–2013, Texas Instruments Incorporated

Table 8-7. Flash Memory Interface Registers (continued)

Program Memory	Data Memory	Description
FMMEND FF F960h	FSMMEND FF F760h	Flash Memory Module Erase End Time Reload Register
FMRCV FF F962h	FSMRCV FF F762h	Flash Memory Recovery Time Reload Register
FMAR0 FF F964h	FSMAR0 FF F764h	Flash Memory Auto-Read Register 0
FMAR1 FF F966h	FSMAR1 FF F766h	Flash Memory Auto-Read Register 1
FMAR2 FF F968h	FSMAR2 FF F768h	Flash Memory Auto-Read Register 2

8.5.1 Flash Memory Information Block Address Register (FMIBAR/FSMIBAR)

The FMIBAR register specifies the 8-bit address for read or write access to an information block. Because only word access to the information blocks is supported, the least significant bit (LSB) of the FMIBAR must be 0 (word-aligned). The hardware automatically clears the LSB, without regard to the value written to the bit. The FMIBAR register is cleared after device reset. The CPU bus master has read/write access to this register.

15 – 8	7 – 0
Reserved	IBA

IBA — The Information Block Address field holds the word-aligned address of an information block location accessed during a read or write transaction. The LSB of the IBA field is always clear.

8.5.2 Flash Memory Information Block Data Register (FMIBDR/FSMIBDR)

The FMIBDR register holds the 16-bit data for read or write access to an information block. The FMIBDR register is cleared after device reset. The CPU bus master has read/ write access to this register.

15 – 0
IBD

IBD — The Information Block Data field holds the data word for access to an information block. For write operations the IBD field holds the data word to be programmed into the information block location specified by the IBA address. During a read operation from an information block, the IBD field receives the data word read from the location specified by the IBA address.

8.5.3 Flash Memory 0 Write Enable Register (FM0WER/FSM0WER)

The FM0WER register controls section-level write protection for the first half of the flash program memory. The FMS0WER registers controls section-level write protection for the flash data memory. Each data block is divided into 16 8K-byte sections. Each bit in the FM0WER and FSM0WER registers controls write protection for one of these sections. The FM0WER and FSM0WER registers are cleared after device reset, so the flash memory is write protected after reset. The CPU bus master has read/write access to this registers.

15	0
FM0WE	

FM0WEn — The Flash Memory 0 Write Enable n bits control write protection for a section of a flash memory data block. The address mapping of the register bits is shown below.

Bit	Logical Address Range
0	00 0000h–00 1FFFh
1–14	. . .
15	1 E000h–01 FFFFh

8.5.4 Flash Memory 1 Write Enable Register (FM1WER)

The FM1WER register controls write protection for the second half of the program flash memory. The data block is divided into 16 8K-byte sections. Each bit in the FM1WER register controls write protection for one of these sections. The FM1WER register is cleared after device reset, so the flash memory is write protected after reset. The CPU bus master has read/write access to this registers.

15	0
FM1WE	

FM1WEn — The Flash Memory 1 Write Enable n bits control write protection for a section of a flash memory data block. The address mapping of the register bits is shown below.

Bit	Logical Address Range
0	02 0000h–02 1FFFh
1-14	. . .
15	03 E000h–03 FFFFh

8.5.5 Flash Data Memory 0 Write Enable Register (FSM0WER)

The FSM0WER register controls write protection for the flash data memory. The data block is divided into sixteen 512-byte sections. Each bit in the FSM0WER register controls write protection for one of these sections. The FSM0WER register is cleared after device reset, so the flash memory is write protected after reset. The CPU bus master has read/ write access to this registers.

15	0
FSM0WE	

FSM0WEn — The Flash Data Memory 0 Write Enable n bits control write protection for a section of a flash memory data block. The address mapping of the register bits is shown below.

Bit	Logical Address Range
0	0D 0000h–0D 01FFh
1-14	. . .
15	0D 1E00h–0D 1FFFh

Copyright © 2007–2013, Texas Instruments Incorporated

8.5.6 Flash Memory Control Register (FMCTRL/ FSMCTRL)

This register controls the basic functions of the Flash program memory. The register is clear after device reset. The CPU bus master has read/write access to this register.

7	6	5	4	3	2	1	8
MER	PER	PE	IENPROG	DISVRF	Res.	CWD	LOWPRW

LOWPRW — The Low Power Mode controls whether flash program memory is operated in low-power mode, which draws less current when data is read. This is accomplished be only accessing the flash program memory during the first half of the clock period. The low-power mode must not be used at System Clock frequencies above 25 MHz, otherwise a read access may return undefined data. This bit must not be changed while the flash program memory is busy being programmed or erased.
0 – Normal mode.
1 – Low-power mode.

CWD — The CPU Write Disable bit controls whether the CPU has write access to flash memory. This bit must not be changed while FMBUSY is set.
0 – The CPU has write access to the flash memory
1 – An external debugging tool is the current “owner” of the flash memory interface, so write accesses by the CPU are inhibited.

DISVRF — The Disable Verify bit controls the automatic verification feature. This bit must not be changed while the flash program memory is busy being programmed or erased.
0 – New flash program memory contents are automatically verified after programming.
1 – Automatic verification is disabled.

IENPROG — The Interrupt Enable for Program bit is clear after reset. The flash program and data memories share a single interrupt channel but have independent interrupt enable control bits.
0 – No interrupt request is asserted to the ICU when the FMFULL bit is cleared.
1 – An interrupt request is made when the FMFULL bit is cleared and new data can be written into the write buffer.

PE — The Program Enable bit controls write access of the CPU to the flash program memory. This bit must not be altered while the flash program memory is busy being programmed or erased. The PER and MER bits must be clear when this bit is set.
0 – Programming the flash program memory by the CPU is disabled.
1 – Programming the flash program memory is enabled.

PER — The Page Erase Enable bit controls whether a valid write operation triggers an erase operation on a 1024-byte page of flash memory. Page erase operations are only supported for the main blocks, not the information blocks. A page erase operation on an information block is ignored and does not alter the information block. When the PER bit is set, the PE and MER bits must be clear. This bit must not be changed while the flash program memory is busy being programmed or erased.
0 – Page erase mode disabled. Write operations are performed normally.
1 – A valid write operation to a word location in program memory erases the page that contains the word.

MER — The Module Erase Enable bit controls whether a valid write operation triggers an erase operation on an entire block of flash memory. If an information block is written in this mode, both the information block and its corresponding main block are erased. When the MER bit is set, the PE and PER bits must be clear. This bit must not be changed while the flash program memory is busy being programmed or erased.
0 – Module erase mode disabled. Write operations are performed normally.
1 – A valid write operation to a word location in a main block erases the block that contains the word. A valid write operation to a word location in an information block erases the block that contains the word and its associated main block.

Copyright © 2007–2013, Texas Instruments Incorporated

8.5.7 Flash Memory Status Register (FMSTAT/ FSMSTAT)

This register reports the currents status of the on-chip Flash memory. The FLSR register is clear after device reset. The CPU bus master has read/write access to this register.

7 – 5	4	3	2	1	8
Reserved	DERR	FMFULL	FMBUSY	PERR	EERR

EERR	The Erase Error bit indicates whether an error has occurred during a page erase or module (block) erase. After an erase error occurs, software can clear the EERR bit by writing a 1 to it. Writing a 0 to the EERR bit has no effect. Software must not change this bit while the flash program memory is busy being programmed or erased. 0 – The erase operation was successful. 1 – An erase error occurred.
PERR	The Program Error bit indicates whether an error has occurred during programming. After a programming error occurs, software can clear the PERR bit by writing a 1 to it. Writing a 0 to the PERR bit has no effect. Software must not change this bit while the flash program memory is busy being programmed or erased. 0 – The programming operation was successful. 1 – A programming error occurred.
FMBUSY	The Flash Memory Busy bit indicates whether the flash memory (either main block or information block) is busy being programmed or erased. During that time, software must not request any further flash memory operations. If such an attempt is made, the CPU is stopped as long as the FMBUSY bit is active. The CPU must not attempt to read from program memory (including instruction fetches) while it is busy. 0 – Flash memory is ready to receive a new erase or programming request. 1 – Flash memory busy with previous erase or programming operation.
FMFULL	The Flash Memory Buffer Full bit indicates whether the write buffer for programming is full or not. When the buffer is full, new erase and write requests may not be made. The IENPROG bit can be enabled to trigger an interrupt when the buffer is ready to receive a new request. 0 – Buffer is ready to receive new erase or write requests. 1 – Buffer is full. No new erase or write requests can be accepted.
DERR	The Data Loss Error bit indicates that a buffer overrun has occurred during a programming sequence. After a data loss error occurs, software can clear the DERR bit by writing a 1 to it. Writing a 0 to the DERR bit has no effect. Software must not change this bit while the flash program memory is busy being programmed or erased. 0 – No data loss error occurred. 1 – Data loss error occurred.

8.5.8 Flash Memory Prescaler Register (FMPSR/ FSMPSR)

The FMPSR register is a byte-wide read/write register that selects the prescaler divider ratio. The CPU must not modify this register while an erase or programming operation is in progress (FMBUSY is set). At reset, this register is initialized to 04h if the flash memory is idle. The CPU bus master has read/write access to this register.

7 – 5	4 – 0
Reserved	FTDIV

FTDIV	The prescaler divisor scales the frequency of the System Clock by a factor of (FTDIV + 1).

8.5.9 Flash Memory Start Time Reload Register (FMSTART/FSMSTART)

The FMSTART/FSMSTART register is a byte-wide read/ write register that controls the program/erase start delay time. Software must not modify this register while a program/erase operation is in progress (FMBUSY set). At reset, this register is initialized to 18h if the flash memory is idle. The CPU bus master has read/write access to this register.

7 – 0
FTSTART

FTSTART	The Flash Timing Start Delay Count field generates a delay of (FTSTART + 1) prescaler output clocks.

Copyright © 2007–2013, Texas Instruments Incorporated

8.5.10 Flash Memory Transition Time Reload Register (FMTRAN/FSMTRAN)

The FMTRAN/FMSTRAN register is a byte-wide read/write register that controls some program/erase transition times. Software must not modify this register while program/erase operation is in progress (FMBUSY set). At reset, this register is initialized to 30h if the flash memory is idle. The CPU bus master has read/write access to this register.

7							0
FTTRAN							

FTTRAN The Flash TIming Transition Count field specifies a delay of (FTTRAN + 1) prescaler output clocks.

8.5.11 Flash Memory Programming Time Reload Register (FMPROG/FSMPROG)

The FMPROG/FSMPROG register is a byte-wide read/write register that controls the programming pulse width. Software must not modify this register while a program/erase operation is in progress (FMBUSY set). At reset, this register is initialized to 16h if the flash memory is idle. The CPU bus master has read/write access to this register.

7							0
FTPROG							

FTPROG The Flash Timing Programming Pulse Width field specifies a programming pulse width of 8 × (FTPROG + 1) prescaler output clocks.

8.5.12 Flash Memory Page Erase Time Reload Register (FMPERASE/FSMPERASE)

The FMPERASE/FSMPERASE register is a byte-wide read/write register that controls the page erase pulse width. Software must not modify this register while a program/ erase operation is in progress (FMBUSY set). At reset, this register is initialized to 04h if the flash memory is idle. The CPU bus master has read/write access to this register.

7							0
FTPER							

FTPER The Flash Timing Page Erase Pulse Width field specifies a page erase pulse width of 4096 M (FTPER + 1) prescaler output clocks

8.5.13 Flash Memory Module Erase Time Reload Register 0 (FMMERASE0/FSMMERASE0)

The FMMERASE0/FSMMERASE0 register is a byte-wide read/write register that controls the module erase pulse width. Software must not modify this register while a program/erase operation is in progress (FMBUSY set). At reset, this register is initialized to EAh if the flash memory is idle. The CPU bus master has read/write access to this register.

7							0
FTMER							

FTMER The Flash Timing Module Erase Pulse Width field specifies a module erase pulse width of 4096 M (FTMER + 1) prescaler output clocks.

8.5.14 Flash Memory End Time Reload Register (FMEND/FSMEND)

The FMEND/FSMEND register is a byte-wide read/write register that controls the delay time after a program/erase operation. Software must not modify this register while a program/erase operation is in progress (FMBUSY set). At reset, this register is initialized to 18h when the flash memory on the chip is idle. The CPU bus master has read/write access to this register.

7	0
FTEND	

FTEND The Flash Timing End Delay Count field specifies a delay of (FTEND + 1) prescaler output clocks.

8.5.15 Flash Memory Module Erase End Time Reload Register (FMMEND/FSMMEND)

The FMMEND/FSMMEND register is a byte-wide read/write register that controls the delay time after a module erase operation. Software must not modify this register while a program/erase operation is in progress (FMBUSY set). At reset, this register is initialized to 3Ch if the flash memory is idle. The CPU bus master has read/write access to this register.

7	0
FTMEND	

FTMEND The Flash Timing Module Erase End Delay Count field specifies a delay of 8 × (FTMEND + 1) prescaler output clocks.

8.5.16 Flash Memory Recovery Time Reload Register (FMRCV/FSMRCV)

The FMRCV/FSMRCV register is a byte-wide read/write register that controls the recovery delay time between two flash memory accesses. Software must not modify this register while a program/erase operation is in progress (FMBUSY set). At reset, this register is initialized to 04h if the flash memory is idle. The CPU bus master has read/write access to this register.

7	0
FTRVC	

FTRCV The Flash Timing Recovery Delay Count field specifies a delay of (FTRCV + 1) prescaler output clocks.

8.5.17 Flash Memory Auto-Read Register 0 (FMAR0/ FSMAR0)

The FMAR0/FSMAR0 register contains a copy of the Function Word from Information Block 0. The Function Word is sampled at reset. The contents of the FMAR0 register are used to enable or disable special device functions. The CPU bus master has read-only access to this register. The FSMAR0 register has the same value as the FMAR0 register.

15	1	0
Reserved		USB_ENABLE

USB_ENABLE The USB_ENABLE bit can be used to force an external USB transceiver into its low-power mode. The USB power mode is dependent on the USB controller status, the USB_ENABLE bit in the MCFG register (see Section 7.1), and the USB_ENABLE bit in the Function Word.
0 – External USB transceiver forced into low- power mode.
1 – Transceiver power mode dependent on USB controller status and programming of the Function Word.

Copyright © 2007–2013, Texas Instruments Incorporated

8.5.18 Flash Memory Auto-Read Register 1 (FMAR1/ FSMAR1)

The FMAR1 register contains a copy of the Protection Word from Information Block 1. The Protection Word is sampled at reset. The contents of the FMAR1 register define the current Flash memory protection settings. The CPU bus master has read-only access to this register. The FSMAR1 register has the same value as the FMAR1 register. The format is the same as the format of the Protection Word (see Section 8.4.2).

15 – 13	12 – 10	9 – 7	6 – 4	3 – 1	0
WRPROT	RDPROT	ISPE	EMPTY	BOOTAREA 1	1

8.5.19 Flash Memory Auto-Read Register 2 (FMAR2/ FSMAR2)

The FMAR2 register is a word-wide read-only register, which is loaded during reset. It is used to build the Code Area start address. At reset, the CPU executes a branch, using the contents of the FMAR2 register as displacement. The CPU bus master has read-only access to this register. The FSMAR2 register has the same value as the FMAR2 register.

15	14 – 11	10 – 8
CADR15	CADR14:11	CADR10:8

CADR10:0	The Code Area Start Address (bits 10:0) contains the lower 11 bits of the Code Area start address. The CADR10:0 field has a fixed value of 0.
CADR14:11	The Code Area Start Address (bits 14:11) are loaded during reset with the inverted value of BOOTAREA3:0.
CADR15	The Code Area Start Address (bits 15) contains the upper bit of the Code Area start address. The CADR15 field has a fixed value of 0.

9 DMA CONTROLLER

The DMA Controller (DMAC) has a register-based programming interface, as opposed to an interface based on I/O control blocks. After loading the registers with source and destination addresses, as well as block size and type of operation, a DMAC channel is ready to respond to DMA transfer requests. A request can only come from on-chip peripherals or software, not external peripherals. On receiving a DMA transfer request, if the channel is enabled, the DMAC performs the following operations:

1. 1. Arbitrates to become master of the CPU bus.
2. Determines priority among the DMAC channels, one clock cycle before T1 of the DMAC transfer cycle. (T1 is the first clock cycle of the bus cycle.) Priority among the DMAC channels is fixed in descending order, with Channel 0 having the highest priority.
3. Executes data transfer bus cycle(s) selected by the values held in the control registers of the channel being serviced, and according to the accessed memory address. The DMAC acknowledges the request during the bus cycle that accesses the requesting device.
4. If the transfer of a block is terminated, the DMAC does the following: Updates the termination bits. Generates an interrupt (if enabled). Goes to step 6.
5. If $\overline{\text{DMRQ}}$n is still active, and the Bus Policy is “continuous”, returns to step 3.
6. Returns mastership of the CPU bus to the CPU.

Each DMAC channel can be programmed for direct (flyby) or indirect (memory-to-memory) data transfers. Once a DMAC transfer cycle is in progress, the next transfer request is sampled when the DMAC acknowledge is de-asserted, then on the rising edge of every clock cycle.

The configuration of either address freeze or address update (increment or decrement) is independent of the number of transferred bytes, transfer direction, or number of bytes in each DMAC transfer cycle. All these can be configured for each channel by programming the appropriate control registers.

Each DMAC channel has eight control registers. DMAC channels are described hereafter with the suffix n, where n = 0 to 3, representing the channel number in the register-names.

9.1 CHANNEL ASSIGNMENT

Table 9-1 shows the assignment of the DMA channels to different tasks. Four channels can be shared by a primary and an secondary function. However, only one source at a time can be enabled. If a channel is used for memory block transfers, other resources must be disabled.

Table 9-1. DMA Channel Assignment

Channel	Peripheral	Transaction	Register
0 (Primary)	USB	R/W	RX/TX FIFO
0 (Secondary)	UART0	R	RXBUF
1 (Primary)	UART0	W	TXBUF
1 (Secondary)	Reserved	N/A	N/A
2 (Primary)	Audio Interface	R	ARDR0
2 (Secondary)	CVSD/PCM Transcoder	R	PCMOUT
3 (Primary)	Audio Interface	W	ATDR0
3 (Secondary)	CVSD/PCM Transcoder	W	PCMIN

9.2 TRANSFER TYPES

The DMAC uses two data transfer modes, Direct (Flyby) and Indirect (Memory-to-Memory). The choice of mode depends on the required bus performance and whether direct mode is available for the transfer. Indirect mode must be used when the source and destination have differing bus widths, when both the source and destination are in memory, and when the destination does not support direct mode.

Copyright © 2007–2013, Texas Instruments Incorporated

9.2.1 Direct (Flyby) Transfers

In direct mode each data item is transferred using a single bus cycle, without reading the data into the DMAC. It provides the fastest transfer rate, but it requires identical source and destination bus widths. The DMAC cannot use Direct cycles between two memory devices. One of the devices must be an I/O device that supports the Direct (Flyby) mechanism, as shown in Figure 9-1.

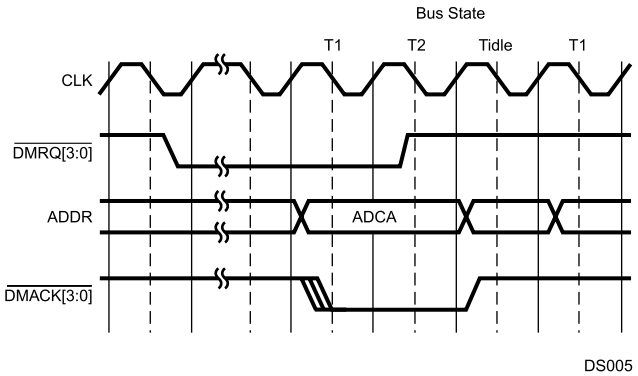

Figure 9-1. Direct DMA Cycle Followed by a CPU Cycle

Direct mode supports two bus policies: intermittent and continuous. In intermittent mode, the DMAC gives bus mastership back to the CPU after every cycle. In continuous mode, the DMAC remains bus master until the transfer is completed. The maximum bus throughput in intermittent mode is one transfer for every three System Clock cycles. The maximum bus throughput in continuous mode is one transfer for every clock cycle.

The I/O device which made the DMA request is called the implied I/O device. The other device can be either memory or another I/O device, and is called the addressed device.

Because only one address is required in direct mode, this address is taken from the corresponding ADCAn counter. The DMAC channel generates either a read or a write bus cycle, as controlled by the DMACNTLn.DIR bit.

When the DMACNTLn.DIR bit is clear, a read bus cycle from the addressed device is performed, and the data is written to the implied I/O device. When the DMACNTLn.DIR bit is set, a write bus cycle to the addressed device is performed, and the data is read from the implied I/O device.

The configuration of either address freeze or address update (increment or decrement) is independent of the number of transferred bytes, transfer direction, or number of bytes in each DMAC transfer cycle. All these can be configured for each channel by programming the appropriate control register.

Whether 8 or 16 bits are transferred in each cycle is selected by the DMACNTLn.TCS register bit. After the data item has been transferred, the BLTCn counter is decremented by one. The ADCAn counter is updated according to the INCA and ADA fields in the DMACNTLn register.

9.2.2 Indirect (Memory-To-Memory) Transfers

In indirect (memory-to-memory) mode, data transfers use two consecutive bus cycles. The data is first read into a temporary register, and then written to the destination in the following cycle. This mode is slower than the direct (flyby) mode, but it provides support for different source and destination bus widths. Indirect mode must be used for transfers between memory devices.

If an intermittent bus policy is used, the maximum throughput is one transfer for every five clock cycles. If a continuous bus policy is used, maximum throughput is one transfer for every two clock cycles.

When the DMACNTLn.DIR bit is 0, the first bus cycle reads data from the source using the ADCAn counter, while the second bus cycle writes the data into the destination using the ADCBn counter. When the DMACNTLn.DIR bit is set, the first bus cycle reads data from the source using the ADCBn counter, while the second bus cycle writes the data into the destination addressed by the ADCAn counter.

The number of bytes transferred in each cycle is taken from the DMACNTLn.TCS register bit. After the data item has been transferred, the BLTCn counter is decremented by one. The ADCAn and ADCBn counters are updated according to the INCA, INCB, ADA, and ADB fields in the DMACNTLn register.

9.3 OPERATION MODES

The DMAC operates in three different block transfer modes: single transfer, double buffer, and auto-initialize.

9.3.1 Single Transfer Operation

This mode provides the simplest way to accomplish a single block data transfer.

Initialization

1. Write the block transfer addresses and byte count into the corresponding ADCAn, ADCBn, and BLTCn counters.
2. Set the DMACNTLn.CHEN bit to activate the channel and enable it to respond to DMA transfer requests.
3. Set the DMACNTLn.CHEN bit to activate the channel and enable it to respond to DMA transfer requests.

Termination

When the BLTCn counter reaches 0:

1. The transfer operation terminates.
2. The DMASTAT.TC and DMASTAT.OVR bits are set, and the DMASTAT.CHAC bit is cleared.
3. An interrupt is generated if enabled by the DMACNTLn.ETC or DMACNTLn.EOVR bits.

The DMACNTLn.CHEN bit must be cleared before loading the DMACNTLn register to avoid prematurely starting a new DMA transfer.

9.3.2 Double Buffer Operation

This mode allows software to set up the next block transfer while the current block transfer proceeds.

Initialization

1. Write the block transfer addresses and byte count into the ADCAn, ADCBn, and BLTCn counters.
2. Clear the DMACNTLn.OT bit to select non-auto-initialize mode. Clear the DMASTAT.VLD bit by writing a 1 to it.
3. Set the DMACNTLn.CHEN bit. This activates the channel and enables it to respond to DMA transfer requests.
4. While the current block transfer proceeds, write the addresses and byte count for the next block into the ADRAn, ADRBn, and BLTRn registers. The BLTRn register must be written last, because it sets the DMASTAT.VLD bit which indicates that all the parameters for the next transfer have been updated.

This mode provides the simplest way to accomplish a single block data transfer.

Clear the DMACNTLn.OT bit to select non-auto-initialize mode. Clear the DMASTAT.VLD bit by writing a 1 to it.

Set the DMACNTLn.CHEN bit to activate the channel and enable it to respond to DMA transfer requests.

 Copyright © 2007–2013, Texas Instruments Incorporated

Continuation/Termination

When the BLTCn counter reaches 0:

1. The DMASTAT.TC bit is set.
2. An interrupt is generated if enabled by the DMACNTLn.ETC bit.
3. The DMAC channel checks the value of the VLD bit.

If the DMASTAT.VLD bit is set:

1. The channel copies the ADRAn, ADRBn, and BLTRn values into the ADCAn, ADCBn, and BLTCn registers.
2. The DMASTAT.VLD bit is cleared.
3. The next block transfer is started.

If the DMASTAT.VLD bit is clear:

1. The transfer operation terminates.
2. The channel sets the DMASTAT.OVR bit.
3. The DMASTAT.CHAC bit is cleared.
4. An interrupt is generated if enabled by the DMACNTLn.EOVR bit.

The DMACNTLn.CHEN bit must be cleared before loading the DMACNTLn register to avoid prematurely starting a new DMA transfer.

Note: The ADCBn and ADRBn registers are used only in indirect (memory-to-memory) transfer. In direct (flyby) mode, the DMAC does not use them and therefore does not copy ADRBn into ADCBn.

9.3.3 Auto-Initialize Operation

This mode allows the DMAC to continuously fill the same memory area without software intervention.

Initialization

1. Write the block addresses and byte count into the ADCAn, ADCBn, and BLTCn counters, as well as the ADRAn, ADRBn, and BLTRn registers.
2. Set the DMACNTLn.OT bit to select auto-initialize mode.
3. Set the DMACNTLn.CHEN bit to activate the channel and enable it to respond to DMA transfer requests.

Continuation

When the BLTCn counter reaches 0:

1. The contents of the ADRAn, ADRBn, and BLTRn registers are copied to the ADCAn, ADCBn, and BLTCn counters.
2. The DMAC channel checks the value of the DMASTAT.TC bit.

If the DMASTAT.TC bit is set:

1. The DMASTAT.OVR bit is set.
2. A level interrupt is generated if enabled by the DMACNTLn.EOVR bit.
3. The operation is repeated.

If the DMASTAT.TC bit is clear:

1. The DMASTAT.TC bit is set.
2. A level interrupt is generated if enabled by the DMACNTLn.ETC bit.
3. The DMAC operation is repeated.

The DMA transfer is terminated when the DMACNTLn.CHEN bit is cleared.

Copyright © 2007–2013, Texas Instruments Incorporated

9.4 SOFTWARE DMA REQUEST

In addition to the hardware requests from I/O devices, a DMA transfer request can also be initiated by software. A software DMA transfer request must be used for block copying between memory devices.

When the DMACNTLn.SWRQ bit is set, the corresponding DMA channel receives a DMA transfer request. When the DMACNTLn.SWRQ bit is clear, the software DMA transfer request of the corresponding channel is inactive.

For each channel, use the software DMA transfer request only when the corresponding hardware DMA request is inactive and no terminal count interrupt is pending. Software can poll the DMASTAT.CHAC bit to determine whether the DMA channel is already active. After verifying the DMASTATn.CHAC bit is clear (channel inactive), check the DMASTATn.TC (terminal count) bit. If the TC bit is clear, then no terminal count condition exists and therefore no terminal count interrupt is pending. If the channel is not active and no terminal count interrupt is pending, software may request a DMA transfer.

9.5 DEBUG MODE

When the FREEZE signal is active, all DMA operations are stopped. They will start again when the FREEZE signal goes inactive. This allows breakpoints to be used in debug systems.

9.6 DMA CONTROLLER REGISTER SET

There are four identical sets of DMA controller registers, as listed in Table 9-2.

Table 9-2. DMA Controller Registers

Name	Address	Description
ADCA0	FF F800h	Device A Address Counter Register
ADRA0	FF F804h	Device A Address Register
ADCB0	FF F808h	Device B Address Counter Register
ADRB0	FF F80Ch	Device B Address Register
BLTC0	FF F810h	Block Length Counter Register
BLTR0	FF F814h	Block Length Register
DMACNTL0	FF F81Ch	DMA Control Register
DMASTAT0	FF F81Eh	DMA Status Register
ADCA1	FF F820h	Device A Address Counter Register
ADRA1	FF F824h	Device A Address Register
ADCB1	FF F828h	Device B Address Counter Register
ADRB1	FF F82Ch	Device B Address Register
BLTC1	FF F830h	Block Length Counter Register
BLTR1	FF F834h	Block Length Register
DMACNTL1	FF F83Ch	DMA Control Register
DMASTAT1	FF F83Eh	DMA Status Register
ADCA2	FF F840h	Device A Address Counter Register
ADRA2	FF F844h	Device A Address Register
ADCB2	FF F848h	Device B Address Counter Register
ADRB2	FF F84Ch	Device B Address Register
BLTC2	FF F850h	Block Length Counter Register
BLTR2	FF F854h	Block Length Register
DMACNTL2	FF F85Ch	DMA Control Register
DMASTAT2	FF F85Eh	DMA Status Register
ADCA3	FF F860h	Device A Address Counter Register
ADRA3	FF F864h	Device A Address Register
ADCB3	FF F868h	Device B Address Counter Register

Copyright © 2007–2013, Texas Instruments Incorporated

Table 9-2. DMA Controller Registers (continued)

ADRB3	FF F86Ch	Device B Address Register
BLTC3	FF F870h	Counter Register
BLTR3	FF F874h	Block Length Register
DMACNTL3	FF F87Ch	DMA Control Register
DMASTAT3	FF F87Eh	DMA Status Register

9.6.1 Device A Address Counter Register (ADCAn)

The Device A Address Counter register is a 32-bit, read/ write register. It holds the current 24-bit address of either the source data item or the destination location, depending on the state of the DIR bit in the CNTLn register. The ADA bit of DMACNTLn register controls whether to adjust the pointer in the ADCAn register by the step size specified in the INCA field of DMACNTLn register. The upper 8 bits of the ADCAn register are reserved and always clear.

31 24	23 0
Reserved	Device A Address Counter

9.6.2 Device A Address Register (ADRAn)

The Device A Address register is a 32-bit, read/write register. It holds the 24-bit starting address of either the next source data block, or the next destination data area, according to the DIR bit in the DMACNTLn register. The upper 8 bits of the ADRAn register are reserved and always clear.

31 24	23 0
Reserved	Device A Address

9.6.3 Device B Address Counter Register (ADCBn)

The Device B Address Counter register is a 32-bit, read/write register. It holds the current 24-bit address of either the source data item, or the destination location, according to the DIR bit in the CNTLn register. The ADCBn register is updated after each transfer cycle by INCB field of the DMACNTLn register according to ADB bit of the DMACNTLn register. In direct (flyby) mode, this register is not used. The upper 8 bits of the ADCBn register are reserved and always clear.

31 24	23 0
Reserved	

9.6.4 Device B Address Register (ADRBn)

The Device B Address register is a 32-bit, read/write register. It holds the 24-bit starting address of either the next source data block or the next destination data area, according to the DIR bit in the CNTLn register. In direct (flyby) mode, this register is not used. The upper 8 bits of the ADCRBn register are reserved and always clear.

31 24	23 0
Reserved	Device B Address

9.6.5 Block Length Counter Register (BLTCn)

The Block Length Counter register is a 16-bit, read/write register. It holds the current number of DMA transfers to be executed in the current block. BLTCn is decremented by one after each transfer cycle. A DMA transfer may consist of 1 or 2 bytes, as selected by the DMACNTLn.TCS bit.

15	0
Block Length Counter	

: **Note:** 0000h is interpreted as 2^{16}-1 transfer cycles.

9.6.6 Block Length Register (BLTRn)

The Block Length register is a 16-bit, read/write register. It holds the number of DMA transfers to be performed for the next block. Writing this register automatically sets the DMASTAT.VLD bit.

15	0
Block Length	

Note: 0000h is interpreted as 2^{16}-1 transfer cycles.

9.6.7 DMA Control Register (DMACNTLn)

The DMA Control register n is a word-wide, read/write register that controls the operation of DMA channel n. This register is cleared at reset. Reserved bits must be written with 0.

7	6	5	4	3	2	1	0
BPC	OT	DIR	IND	TCS	EOVR	ETC	CHEN

15	14	13	12	11	10	9	8
Res.	INCB		ADB	INCA		ADA	SWRQ

CHEN — The Channel Enable bit must be set to enable any DMA operation on this channel. Writing a 1 to this bit starts a new DMA transfer even if it is currently a 1. If all DMACNTLn.CHEN bits are clear, the DMA clock is disabled to reduce power.
0 – Channel disabled.
1 – Channel enabled.

ETC — If the Enable Interrupt on Terminal Count bit is set, it enables an interrupt when the DMASTAT.TC bit is set.
0 – Interrupt disabled.
1 – Interrupt enabled.

EOVR — If the Enable Interrupt on OVR bit is set, it enables an interrupt when the DMASTAT.OVR bit is set.
0 – Interrupt disabled.
1 – Interrupt enabled.

TCS — The Transfer Cycle Size bit specifies the number of bytes transferred in each DMA transfer cycle. In direct (fly-by) mode, undefined results occur if the TCS bit is not equal to the addressed memory bus width.
0 – Byte transfers (8 bits per cycle).
1 – Word transfers (16 bits per cycle).

IND — The Direct/Indirect Transfer bit specifies the transfer type.
0 – Direct transfer (flyby).
1 – Indirect transfer (memory-to-memory).

DIR — The Transfer Direction bit specifies the direction of the transfer relative to Device A.
0 – Device A (pointed to by the ADCAn register) is the source. In Fly-By mode a read transaction is initialized.
1 – Device A (pointed to by the ADCAn register) is the destination. In Fly-By mode a write transaction is initialized.

OT — The Operation Type bit specifies the operation mode of the DMA controller.
0 – Single-buffer mode or double-buffer mode enabled.
1 – Auto-Initialize mode enabled.

BPC — The Bus Policy Control bit specifies the bus policy applied by the DMA controller. The operation mode can be either intermittent (cycle stealing) or continuous (burst).
0 – Intermittent operation. The DMAC channel relinquishes the bus after each transaction, even if the request is still asserted.
1 – Continuous operation. The DMAC channel n uses the bus continuously as long as the request is asserted. This mode can only be used for software DMA requests. For hardware DMA requests, the BPC bit must be clear.

Copyright © 2007–2013, Texas Instruments Incorporated

SWRQ	The Software DMA Request bit is written with a 1 to initiate a software DMA request. Writing a 0 to this bit deactivates the software DMA request. The SWRQ bit must only be written when the DMRQ signal for this channel is inactive (DMASTAT.CHAC = 0). 0 – Software DMA request is inactive. 1 – Software DMA request is active.
ADA	If the Device A Address Control bit is set, it enables updating the Device A address. 0 – ADCAn address unchanged. 1 – ADCAn address incremented or decremented, according to INCA field of DMACNTLn register.
INCA	The Increment/Decrement ADCAn field specifies the step size for the Device A address increment/decrement. 00 – Increment ADCAn register by 1. 01 – Increment ADCAn register by 2. 10 – Decrement ADCAn register by 1. 11 – Decrement ADCAn register by 2.
ADB	If the Device B Address Control bit is set, it enables updating the Device B Address. 0 – ADCBn address unchanged. 1 – ADCBn address incremented or decremented, according to INCB field of DMACNTLn register.
INCB	The Increment/Decrement ADCBn field specifies the step size for the Device B address increment/decrement. 00 – Increment ADCBn register by 1. 01 – Increment ADCBn register by 2. 10 – Decrement ADCBn register by 1. 11 – Decrement ADCBn register by 2.

9.6.8 DMA Status Register (DMASTAT)

The DMA status register is a byte-wide, read register that holds the status information for the DMA channel n. This register is cleared at reset. The reserved bits always return zero when read. The VLD, OVR and TC bits are sticky (once set by the occurrence of the specific condition, they remain set until explicitly cleared by software). These bits can be individually cleared by writing 1 to the bit positions in the DMASTAT register to be cleared. Writing 0 to these bits has no effect.

7 … 4	3	2	1	0
Reserved	VLD	CHAC	OVR	TC

TC	The Terminal Count bit indicates whether the transfer was completed by a terminal count condition (BLTCn Register reached 0). 0 – Terminal count condition did not occur. 1 – Terminal count condition occurred.
OVR	The behavior of the Channel Overrun bit depends on the operation mode (single buffer, double buffer, or auto-initialize) of the DMA channel. In double-buffered mode (DMACNTLn.OT = 0): The OVR bit is set when the present transfer is completed (BLTCn = 0), but the parameters for the next transfer (address and block length) are not valid (DMASTAT.VLD = 0). In auto-initialize mode (DMACNTLn.OT = 1): The OVR bit is set when the present transfer is completed (BLTCn = 0), and the DMASTAT.TC bit is still set. In single-buffer mode: Operates in the same way as double-buffer mode. In single-buffered mode, the DMASTAT.VLD bit should always be clear, so it will also be set when the DMASTAT.TC bit is set. Therefore, the OVR bit can be ignored in this mode.
CHAC	The Channel Active bit continuously indicates the active or inactive status of the channel, and therefore, it is read only. Data written to the CHAC bit is ignored. 0 – Channel inactive. 1 – Indicates that the channel is active (CHEN bit in the CNTLn register is 1 and BLTCn > 0)
VLD	The Transfer Parameters Valid bit specifies whether the transfer parameters for the next block to be transferred are valid. Writing the BLTRn register automatically sets this bit. The bit is cleared in the following cases: The present transfer is completed and the ADRAn, ADRBn (indirect mode only), and BLTR registers are copied to the ADCAn, ADCBn (indirect mode only), and BLTCn registers. Writing 1 to the VLD bit.

10 INTERRUPTS

The Interrupt Control Unit (ICU) receives interrupt requests from internal and external sources and generates interrupts to the CPU. Interrupts from the timers, UARTs, Microwire/ SPI interface, and Multi-Input Wake-Up module are all maskable interrupts. The highest-priority interrupt is the Non-Maskable Interrupt (NMI), which is triggered by a falling edge received on the $\overline{\text{NMI}}$ input pin.

The priorities of the maskable interrupts are hardwired and therefore fixed. The implemented interrupts are named IRQ0 through IRQ47, in which IRQ0 has the lowest priority and IRQ47 has the highest priority. (IRQ0 is not implemented, so IRQ1 is the lowest priority interrupt that normally may occur.)

10.1 NON-MASKABLE INTERRUPTS

The Interrupt Control Unit (ICU) receives the external $\overline{\text{NMI}}$ input and generates the NMI signal driven to the CPU. The $\overline{\text{NMI}}$ input is an asynchronous input with Schmitt trigger characteristics and an internal synchronization circuit, therefore no external synchronizing circuit is needed. The $\overline{\text{NMI}}$ pin triggers an exception on its falling edge.

10.1.1 Non-Maskable Interrupt Processing

The CPU performs an interrupt acknowledge bus cycle when beginning to process a non-maskable interrupt.

At reset, NMI interrupts are disabled and must remain disabled until software initializes the interrupt table, interrupt base register (INTBASE), and the interrupt mode. The external $\overline{\text{NMI}}$ interrupt is enabled by setting the EXNMI.ENLCK bit and will remain enabled until a reset occurs. Alternatively, the external $\overline{\text{NMI}}$ interrupt can be enabled by setting the EXNMI.EN bit and will remain enabled until an interrupt event or a reset occurs.

10.2 MASKABLE INTERRUPTS

The ICU receives level-triggered interrupt request signals from 47 sources and generates a vectored interrupt to the CPU when required. Priority among the implemented interrupt sources (named IRQ1 through IRQ47) is fixed.

The maskable interrupts are globally enabled and disabled by the E bit in the PSR register. The EI and DI instructions are used to set (enable) and clear (disable) this bit. The global maskable interrupt enable bit (I bit in the PSR) must also be set before any maskable interrupts are taken.

Each interrupt source can be individually enabled or disabled under software control through the ICU interrupt enable registers and also through interrupt enable bits in the peripherals that request the interrupts. The ICU supports IRQ0, but in the CP3BT26 it is not connected to any interrupt source.

10.2.1 Maskable Interrupt Processing

Interrupt vector numbers are always positive, in the range 10h to 3Fh. The IVCT register contains the interrupt vector of the enabled and pending interrupt with the highest priority. The interrupt vector 10h corresponds to IRQ0 and the lowest priority, while the vector 3Fh corresponds to IRQ47 and the highest priority. The CPU performs an interrupt acknowledge bus cycle on receiving a maskable interrupt request from the ICU. During the interrupt acknowledge cycle, a byte is read from address FF FE00h (IVCT register). The byte is used as an index into the Dispatch Table to determine the address of the interrupt handler.

Because IRQ0 is not connected to any interrupt source, it would seem that the interrupt vector would never return the value 10h. If it does return a value of 10h, the entry in the dispatch table should point to a default interrupt handler that handles this error condition. One possible condition for this to occur is deassertion of the interrupt before the interrupt acknowledge cycle.

Copyright © 2007–2013, Texas Instruments Incorporated

10.3 INTERRUPT CONTROLLER REGISTERS

Table 10-1lists the ICU registers.

Table 10-1. Interrupt Controller Registers

Name	Address	Description
IVCT	FF FE00h	Interrupt Vector Register
NMISTAT	FF FE02h	Non-Maskable Interrupt Status Register
EXNMI	FF FE04h	External NMI Trap Control and Status Register
ISTAT0	FF FE0Ah	Interrupt Status Register 0
ISTAT1	FF FE0Ch	Interrupt Status Register 1
ISTAT2	FF FE20h	Interrupt Status Register 2
IENAM0	FF FE0Eh	Interrupt Enable and Mask Register 0
IENAM1	FF FE10h	Interrupt Enable and Mask Register 1
IENAM2	FF FE22h	Interrupt Enable and Mask Register 2

10.3.1 Interrupt Vector Register (IVCT)

The IVCT register is a byte-wide read-only register which reports the encoded value of the highest priority maskable interrupt that is both asserted and enabled. The valid range is from 10h to 3Fh. The register is read by the CPU during an interrupt acknowledge bus cycle, and INTVECT is valid during that time. It may contain invalid data while INTVECT is updated.

7	6	5 … 0
0	0	INTVECT

10.3.2 Non-Maskable Interrupt Status Register (NMISTAT)

The NMISTAT register is a byte-wide read-only register. It holds the status of the current pending Non-Maskable Interrupt (NMI) requests. On the CP3BT26, the external NMI input is the only source of NMI interrupts. The NMISTAT register is cleared on reset and each time its contents are read.

7 … 1	0
Reserved	EXT

EXT — The External NMI request bit indicates whether an external non-maskable interrupt request has occurred. Refer to the description of the EXNMI register below for additional details.
0 – No external NMI request.
1 – External NMI request has occurred.

10.3.3 External NMI Trap Control and Status Register (EXNMI)

The EXNMI register is a byte-wide read/write register. It indicates the current value of the $\overline{\text{NMI}}$ pin and controls the NMI interrupt trap generation based on a falling edge of the $\overline{\text{NMI}}$ pin. TST, EN and ENLCK are cleared on reset. When writing to this register, all reserved bits must be written with 0 for the device to function properly.

7 – 3	2	1	0
Reserved	ENLCK	PIN	EN

EN	The EXNMI trap enable bit is one of two bits that can be used to enable NMI interrupts. The bit is cleared by hardware at reset and whenever the NMI interrupt occurs (EXN- MI.EXT set). It is intended for applications where the NMI input toggles frequently but nested NMI traps are not desired. For these applications, the EN bit needs to be re-enabled before exiting the trap handler. When used this way, the ENLCK bit should never be set. The EN bit can be set and cleared by software (software can set this bit only if EXNMI.EXT is cleared), and should only be set after the interrupt base register and the interrupt stack pointer have been set up. 0 – NMI interrupts not enabled by this bit (but may be enabled by the ENLCK bit). 1 – NMI interrupts enabled.
PIN	The PIN bit indicates the state (non-inverted) on the $\overline{\text{NMI}}$ input pin. This bit is read-only, data written into it is ignored. 0 – $\overline{\text{NMI}}$ pin not asserted. 1 – $\overline{\text{NMI}}$ pin asserted.
ENLCK	The EXNMI trap enable lock bit is used to permanently enable NMI interrupts. Only a device reset can clear the ENLCK bit. This allows the external NMI feature to be enabled after the interrupt base register and the interrupt stack pointer have been set up. When the ENLCK bit is set, the EN bit is ignored. 0 – NMI interrupts not enabled by this bit (but may be enabled by the EN bit). 1 – NMI interrupts enabled.

10.3.4 Interrupt Enable and Mask Register 0 (IENAM0)

The IENAM0 register is a word-wide read/write register which holds bits that individually enable and disable the maskable interrupt sources IRQ1 through IRQ15. The register is initialized to FFFFh at reset.

15 – 1	8
IENA	Res.

IENA	Each Interrupt Enable bit enables or disables the corresponding interrupt request IRQ1 through IRQ15, for example IENA15 controls IRQ15. Because IRQ0 is not used, IENA0 is ignored. 0 – Interrupt is disabled. 1 – Interrupt is enabled.

10.3.5 Interrupt Enable and Mask Register 1 (IENAM1)

The IENAM1 register is a word-wide read/write register which holds bits that individually enable and disable the maskable interrupt sources IRQ16 through IRQ31. The register is initialized to FFFFh at reset.

15 – 0
IENA

IENA	Each Interrupt Enable bit enables or disables the corresponding interrupt request IRQ16 through IRQ31, for example IENA31 controls IRQ31. 0 – Interrupt is disabled. 1 – Interrupt is enabled.

Copyright © 2007–2013, Texas Instruments Incorporated

10.3.6 Interrupt Enable and Mask Register 2 (IENAM2)

The IENAM2 register is a word-wide read/write register which holds bits that individually enable and disable the maskable interrupt sources IRQ32 through IRQ47. The register is initialized to FFFFh at reset.

15	0
IENA	

IENA — Each Interrupt Enable bit enables or disables the corresponding interrupt request IRQ32 through IRQ47, for example IENA47 controls IRQ47.
0 – Interrupt is disabled.
1 – Interrupt is enabled.

10.3.7 Interrupt Status Register 0 (ISTAT0)

The ISTAT0 register is a word-wide read-only register. It indicates which maskable interrupt inputs to the ICU are active. These bits are not affected by the state of the corresponding IENA bits.

15	1	0
IST		Res.

IST — The Interrupt Status bits indicate if a maskable interrupt source is signaling an interrupt request. IST15:1 correspond to IRQ15 to IRQ1 respectively. Because the IRQ0 interrupt is not used, bit 0 always reads back 0.
0 – Interrupt is not active.
1 – Interrupt is active.

10.3.8 Interrupt Status Register 1 (ISTAT1)

The ISTAT1 register is a word-wide read-only register. It indicates which maskable interrupt inputs into the ICU are active. These bits are not affected by the state of the corresponding IENA bits.

15	0
IST	

IST — The Interrupt Status bits indicate if a maskable interrupt source is signaling an interrupt request. IST31:16 correspond to IRQ31 to IRQ16, respectively.
0 – Interrupt is not active.
1 – Interrupt is active.

10.3.9 Interrupt Status Register 2 (ISTAT2)

The ISTAT2 register is a word-wide read-only register. It indicates which maskable interrupt inputs into the ICU are active. These bits are not affected by the state of the corresponding IENA bits.

15	0
IST	

IST — The Interrupt Status bits indicate if a maskable interrupt source is signaling an interrupt request. IST47:32 correspond to IRQ47 to IRQ32, respectively.
0 – Interrupt is not active.
1 – Interrupt is active.

Copyright © 2007–2013, Texas Instruments Incorporated

10.4 MASKABLE INTERRUPT SOURCES

Table 10-2 shows the interrupts assigned to various on-chip maskable interrupts. The priority of simultaneous maskable interrupts is linear, with IRQ47 having the highest priority.

Table 10-2. Maskable Interrupts Assignment

IRQ Number	Description
IRQ47	TWM (Timer 0)
IRQ46	Bluetooth LLC 0
IRQ45	Bluetooth LLC 1
IRQ44	Bluetooth LLC 2
IRQ43	Bluetooth LLC 3
IRQ42	Bluetooth LLC 4
IRQ41	Bluetooth LLC 5
IRQ40	USB Interface
IRQ39	DMA Channel 0
IRQ38	DMA Channel 1
IRQ37	DMA Channel 2
IRQ36	DMA Channel 3
IRQ35	CAN
IRQ34	Advanced Audio Interface (AAI)
IRQ33	UART0 RX
IRQ32	CVSD/PCM Converter
IRQ31	ACCESS.bus
IRQ30	TA (Timer input A)
IRQ29	TB (Timer input B)
IRQ28	VTUA (VTU Interrupt Request 1)
IRQ27	VTUB (VTU Interrupt Request 2)
IRQ26	VTUC (VTU Interrupt Request 3)
IRQ25	VTUD (VTU Interrupt Request 4)
IRQ24	Microwire/SPI RX/TX
IRQ23	UART0 TX
IRQ22	UART0 $\overline{\text{CTS}}$
IRQ21	Reserved
IRQ20	UART1 RX
IRQ19	UART1 TX
IRQ18	UART2 RX
IRQ17	UART2 TX
IRQ16	UART3 RX
IRQ15	UART3 TX
IRQ14	Reserved
IRQ13	ADC (Done)
IRQ12	MIWU Interrupt 0
IRQ11	MIWU Interrupt 1
IRQ10	MIWU Interrupt 2
IRQ9	MIWU Interrupt 3
IRQ8	MIWU Interrupt 4
IRQ7	MIWU Interrupt 5
IRQ6	MIWU Interrupt 6
IRQ5	MIWU Interrupt 7

Copyright © 2007–2013, Texas Instruments Incorporated

Table 10-2. Maskable Interrupts Assignment (continued)

IRQ4	Reserved
IRQ3	Random Number Generator (RNG)
IRQ2	Reserved
IRQ1	Flash Program/Data Memory
IRQ0	Reserved

All reserved interrupt vectors should point to default or error interrupt handlers.

10.5 NESTED INTERRUPTS

Nested NMI interrupts are always enabled. Nested maskable interrupts are disabled by default, however an interrupt handler can allow nested maskable interrupts by setting the I bit in the PSR. The LPR instruction is used to set the I bit.

Nesting of specific maskable interrupts can be allowed by disabling interrupts from sources for which nesting is not allowed, before setting the I bit. Individual maskable interrupt sources can be disabled using the IENAM0 and IENAM1 registers.

Any number of levels of nested interrupts are allowed, limited only by the available memory for the interrupt stack.

11 TRIPLE CLOCK AND RESET

The Triple Clock and Reset module generates a 12 MHz Main Clock and a 32.768 kHz Slow Clock from external crystal networks or external clock sources. It provides various clock signals for the rest of the chip. It also provides the main system reset signal, a power-on reset function, Main Clock prescalers to generate two additional low-speed clocks, and a 32-kHz oscillator start-up delay.

Figure 11-1 is block diagram of the Triple Clock and Reset module.

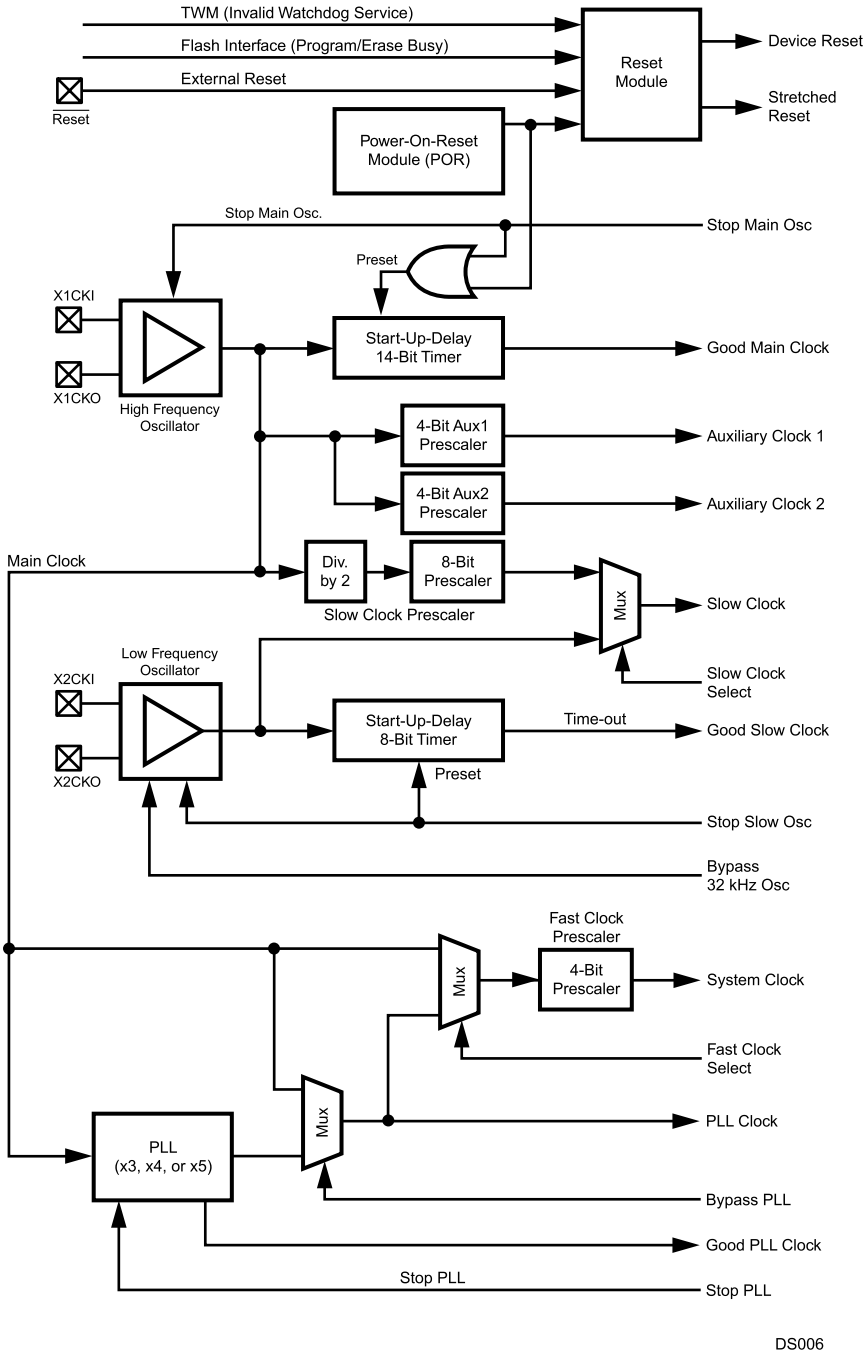

Figure 11-1. Triple Clock and Reset Module

Copyright © 2007–2013, Texas Instruments Incorporated

11.1 EXTERNAL CRYSTAL NETWORK

An external crystal network is connected to the X1CKI and X1CKO pins to generate the Main Clock, unless an external clock signal is driven on the X1CKI pin. A similar external crystal network may be used at pins X2CKI and X2CKO for the Slow Clock. If an external crystal network is not used for the Slow Clock, the Slow Clock is generated by dividing the fast Main Clock.

The crystal network you choose may require external components different from the ones specified in this datasheet. In this case, consult with TI's engineers for the component specifications

The crystals and other oscillator components must be placed close to the X1CKI/X1CKO and X2CKI/X2CKO device input pins to keep the printed trace lengths to an absolute minimum.

Figure 11-2 shows the external crystal network for the X1CKI X1CKO GND DS189 and X1CKO pins. Figure 11-2 shows the external crystal network for the X2CKI and X2CKO pins. Figure 11-3 shows the component specifications for the main crystal network, and Table 11-1 shows the component specifications for the 32.768 kHz crystal network.

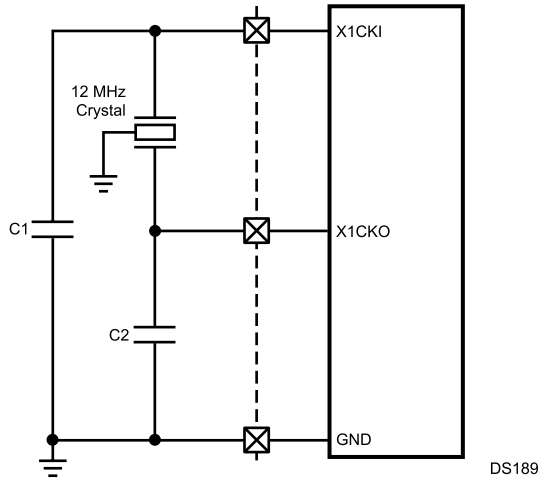

Figure 11-2. Main Clock External Crystal Network

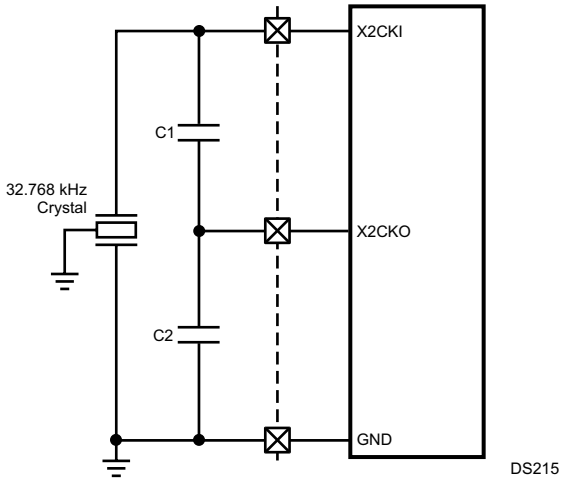

Figure 11-3. Slow Clock External Crystal Network

Table 11-1. Component Values of the Low Frequency Crystal Circuit

Component	Parameters	Values	Tolerance
Crystal	Resonance Frequency	12 MHz ± 20 ppm	N/A
	Type	AT-Cut	
	Max. Serial Resistance	50 Ω	
	Max. Shunt Capacitance	7 pF	
	Load Capacitance	22 pF	
Capacitor C1, C2	Capacitance	22 pF	20%
Crystal	Resonance Frequency	32.768 kHz Parallel	N/A
	Type	-Cut or XY-bar	
	Maximum Serial Resistance	40 kΩ	
	Maximum Shunt Capacitance	2 pF	
	Load Capacitance	12.5 pF	
	Min. Q factor	40000	
Capacitor C1, C2	Capacitance	25 pF	20%

Choose capacitor component values in the tables to obtain the specified load capacitance for the crystal when combined with the parasitic capacitance of the trace, socket, and package (which can vary from 0 to 8 pF). As a guideline, the load capacitance is:

$$CL = (C1 \times C2)/(C1 + C2) + Cparasitic$$

where

- C2 > C1

C1 can be trimmed to obtain the desired load capacitance. The start-up time of the 32.768 kHz oscillator can vary from one to six seconds. The long start-up time is due to the high Q value and high serial resistance of the crystal necessary to minimize power consumption in Power Save mode.

11.2 MAIN CLOCK

The Main Clock is generated by the 12-MHz high-frequency oscillator or driven by an external signal (typically the LMX5252 RF chip). It can be stopped by the Power Management Module to reduce power consumption during periods of reduced activity. When the Main Clock is restarted, a 14-bit timer generates a Good Main Clock signal after a start-up delay of 32,768 clock cycles. This signal is an indicator that the high-frequency oscillator is stable.

The Stop Main Osc signal from the Power Management Module stops and starts the high-frequency oscillator. When this signal is asserted, it presets the 14-bit timer to 3FFFh and stops the high-frequency oscillator. When the signal goes inactive, the high-frequency oscillator starts and the 14-bit timer counts down from its preset value. When the timer reaches zero, it stops counting and asserts the Good Main Clock signal.

11.3 SLOW CLOCK

The Slow Clock is necessary for operating the device in reduced power modes and to provide a clock source for modules such as the Timing and Watchdog Module.

The Slow Clock operates in a manner similar to the Main Clock. The Stop Slow Osc signal from the Power Management Module stops and starts the low-frequency (32.768 kHz) oscillator. When this signal is asserted, it presets a 6-bit timer to 3Fh and disables the low-frequency oscillator. When the signal goes inactive, the low-frequency oscillator starts, and the 6-bit timer counts down from its preset value. When the timer reaches zero, it stops counting and asserts the Good Slow Clock signal, which indicates that the Slow Clock is stable.

Copyright © 2007–2013, Texas Instruments Incorporated

For systems that do not require a reduced power consumption mode, the external crystal network may be omitted for the Slow Clock. In that case, the Slow Clock can be synthesized by dividing the Main Clock by a prescaler factor. The prescaler circuit consists of a fixed divide-by-2 counter and a programmable 8-bit prescaler register. This allows a choice of clock divisors ranging from 2 to 512. The resulting Slow Clock frequency must not exceed 100 kHz.

A software-programmable multiplexer selects either the prescaled Main Clock or the 32.768 kHz oscillator as the Slow Clock. At reset, the prescaled Main Clock is selected, ensuring that the Slow Clock is always present initially. Selection of the 32.768 kHz oscillator as the Slow Clock disables the clock prescaler, which allows the CLK1 oscillator to be turned off, which reduces power consumption and radiated emissions. This can be done only if the module detects a toggling low-speed oscillator. If the low-speed oscillator is not operating, the prescaler remains available as the Slow Clock source.

11.4 PLL CLOCK

The PLL Clock is generated by the PLL from the 12 MHz Main Clock by applying a multiplication factor of ×3, ×4, or ×5. The USB interface is clocked directly by the PLL Clock and requires a 48 MHz clock, so a ×4 scaling factor must be used if the USB interface is active. The USB interface also requires a System Clock frequency between 12 and 24 MHz.

1. Set the PLL multiplication factor in PRFSC.MODE.
2. Clear the PLL power-down bit CRCTRL.PLLPWD.
3. Clear the high-frequency clock select bit CRC- TRL.FCLK.
4. Read CRCTRL.FCLK, and go back to step 3 if not clear.

   The CRCTRL.FCLK bit will be clear only after the PLL has stabilized, so software must repeat step 3 until the bit is clear. The clock source can be switched back to the Main Clock by setting the CRCTRL.FCLK bit.

   The PRSFC register must not be modified while the System Clock is derived from the PLL Clock. The System Clock must be derived from the low-frequency oscillator clock while the MODE field is modified.

11.5 SYSTEM CLOCK

The System Clock drives most of the on-chip modules, including the CPU. Typically, it is driven by the Main Clock, but it can also be driven by the PLL. In either case, the clock signal is passed through a programmable divider (scale factors from ÷1 to ÷16). If the USB interface is used, it requires a System Clock frequency between 12 and 24 MHz.

11.6 AUXILIARY CLOCKS

Auxiliary Clock 1 and Auxiliary Clock 2 are generated from Main Clock for use by certain peripherals. Auxiliary Clock 1 is available for the Bluetooth controller and the Advanced Audio Interface. Auxiliary Clock 2 is available for the CVSD/ PCM transcoder and the 12-bit ADC. The Auxiliary clocks may be configured to keep these peripherals running when the System Clock is slowed down or suspended during low-power modes.

Copyright © 2007–2013, Texas Instruments Incorporated

11.7 POWER-ON RESET

The CP3BT26 has specific Power On Reset (POR) timing requirements that must be met to prevent corruption of the on-chip flash program and data memories. This timing sequence shown in Figure 11-4.

All reset circuits must ensure that this timing sequence is always maintained during power-up and power-down. The design of the power supply also affects how this sequence is implemented.

The power-up sequence is:

1. The $\overline{\text{RESET}}$ pin must be held low until both IOVCC and VCC have reached the minimum levels specified in the DC Characteristics section. IOVCC and VCC are allowed to reach their nominal levels at the same time which is the best-case scenario.
2. After both of these supply voltage rails have met this condition, then the $\overline{\text{RESET}}$ pin may be driven high. At power-up an internal 14-bit counter is set to 3FFFh and begins counting down to 0 after the crystal oscillator becomes stable. When this counter reaches 0, the on-chip $\overline{\text{RESET}}$ signal is driven high unless the external $\overline{\text{RESET}}$ pin is still being held low. This prevents the CP3BT26 from coming out of reset with an unstable clock source.

The power-down sequence is:

1. The $\overline{\text{RESET}}$ pin must be driven low as soon as either the IOVCC or VCC voltage rail reaches the minimum levels specified in the DC Characteristics.
2. The $\overline{\text{RESET}}$ pin must then be held low until the Main Clock is stopped. The Main Clock will decay with the same profile as IOVCC.

   Meeting the power-down reset conditions ensures that software will not be executed at voltage levels that may cause incorrect program execution or corruption of the flash memories. This situation must be avoided because the Main Clock decays with the IOVCC supply rather than stopping immediately when IOVCC falls below the minimum specified level.

   The external reset circuits presented in the following sections provide varying levels of additional fault tolerance and expandability and are presented as possible examples of solutions to be used with the CP3BT26. It is important to note, however, that any design for the reset circuit and power supply must meet the timing requirements shown in Figure 11-4.

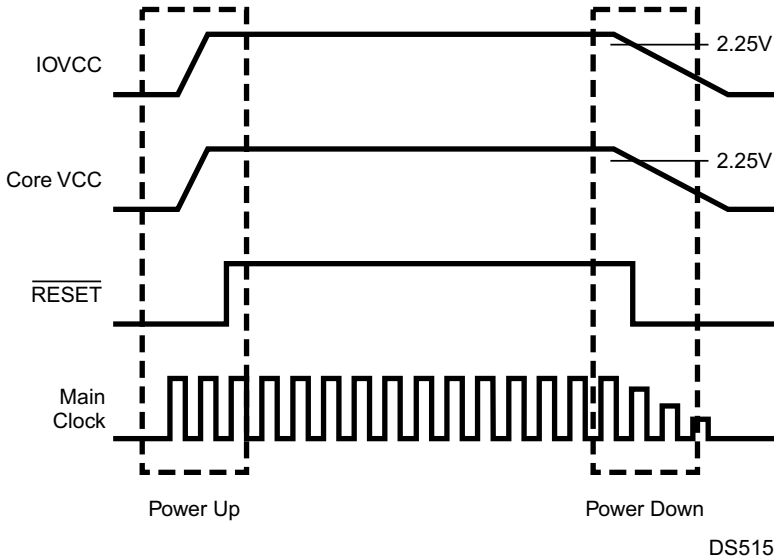

Figure 11-4. Power-On Reset Timing

Copyright © 2007–2013, Texas Instruments Incorporated

11.8 EXTERNAL RESET

External reset is triggered by assertion of the $\overline{\text{RESET}}$ input. As with power-on reset, the on-chip 14-bit counter enforces a minimum reset cycle time.

11.8.1 Simple External Reset

A simple external reset circuit with brown-out and glitch protection based on the LM809 3-Pin Microprocessor Reset Circuit is shown in Figure 11-5. The LM809 produces a 240-ms logic low reset pulse when the power supply rises above a threshold voltage. Various reset thresholds are available for the LM809, however the options for 2.93V and 3.08V are most suitable for a CP3BT26 device operating from an IO- VCC at 3.0V to 3.3V.

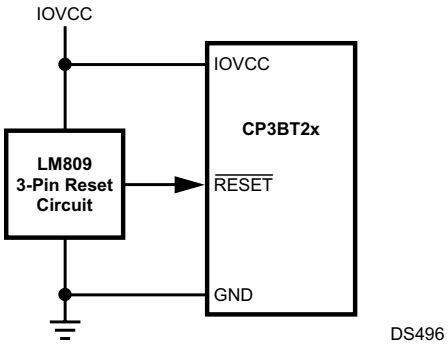

Figure 11-5. Simple External Reset

11.8.2 Manual and SDI External Reset

An external reset circuit based on the LM3724 5-Pin Microprocessor Reset Circuit is shown in Figure 11-6. The LM3724 produces a 190-ms logic low reset pulse when the power supply rises above a threshold voltage or a manual reset button is pressed. Various reset thresholds are available for the LM3724, however the option for 3.08V is most suitable for a CP3BT26 device operating from an IOVCC at 3.3V.

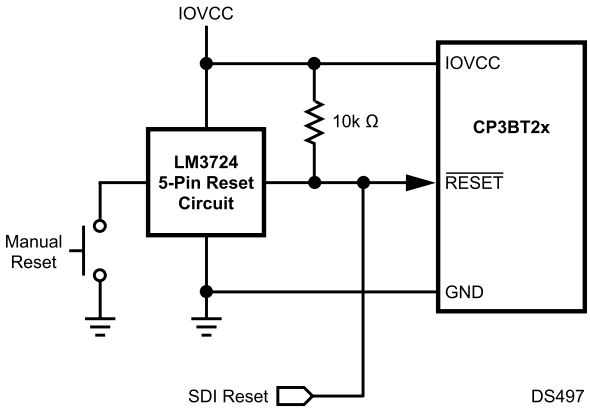

Figure 11-6. Manual and SDI External Reset

The LM3724 provides a debounced input for a manual pushbutton reset switch. It also has an open-drain output which can be used for implementing a wire-OR connection with a reset signal from a serial debug interface. This circuit is typical of a design to be used in a development or evaluation environment, however it is a good recommendation for all general CP3BT26 designs. If an SDI interface is not implemented, an LM3722 with active pullup may be used.

11.8.3 An external reset circuit based on the LM3710 Microprocessor Supervisory Circuit is shown in Figure 11-7. It provides a high level of fault tolerance in that it provides the ability to monitor both the VCC supply for the core logic and the IOVCC supply. It also provides a low-voltage indication for the IOVCC supply and an external watchdog timer.

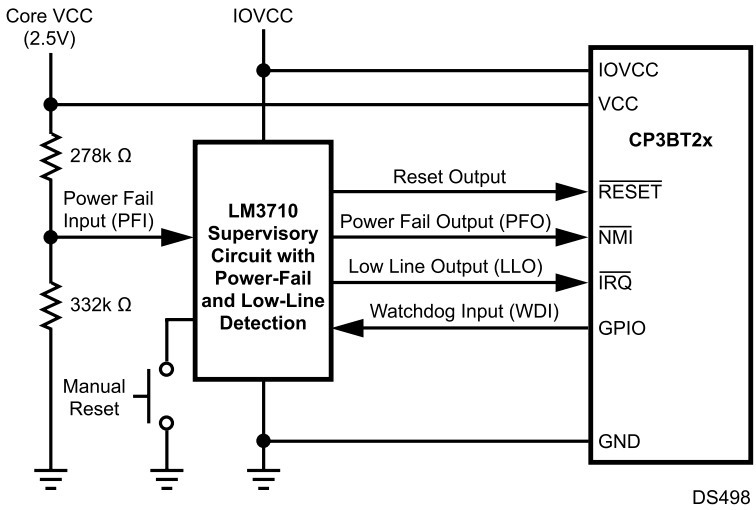

Figure 11-7. Fault-Tolerant External Reset

The signals shown in Figure 11-7 are:

- *Core VCC*—the 2.5V power supply rail for the core logic.
- I*OVCC*—the 2.5–3.3V power supply rail for the I/O logic.
- *Watchdog Input (WDI)*—this signal is asserted by the CP3BT26 at regular intervals to indicate normal operation. A general-purpose I/O (GPIO) port may be used to provide this signal. If the internal watchdog timer in the CP3BT26 is used, then the LM3704 Microprocessor Supervisory Circuit can provide the same features as the LM3710 but without the watchdog timer.
- *$\overline{RESET}$*—an active-low reset signal to the CP3BT26. The LM3710 is available in versions with active pullup or an open-drain RESET output.
- *Power-Fail Input (PFI)*—this is a voltage level derived from the Core VCC power supply rail through a simple resistor divider network.
- *Power-Fail Output (PFO)*—Power-Fail Output (PFO)—this signal is asserted when the voltage on PFI falls below 1.225V. PFO is connected to the non-maskable interrupt ($\overline{NMI}$) input on the CP3BT26. A system shutdown routine can then be invoked by the $\overline{NMI}$ handler.
- *Low Line Output (LLO)*—Low Line Output (LLO)—this signal is asserted when the main IOVCC level fails below a warning threshold voltage but remains above a reset detection threshold. This signal may be routed to the $\overline{NMI}$ input on the CP3BT26 or to a separate interrupt input.

These additional status and feedback mechanisms allow the CP3BT26 to recover from software hangs or perform system shutdown functions before being placed into reset.

The standard reset threshold for the LM3710 is 3.08V with other options for different watchdog timeout and reset timeouts. The selection of these values are much more application-specific. The combination of a watchdog timeout period of 1600 ms and a reset period of 200 ms is a reasonable starting point.

Copyright © 2007–2013, Texas Instruments Incorporated

11.9 CLOCK AND RESET REGISTERS

Table 11-2 lists the clock and reset registers.

Table 11-2. Clock and Reset Registers

Name	Address	Description
CRCTRL	FF FC40h	Clock and Reset Control Register
PRSFC	FF FC42h	High Frequency Clock Prescaler Register
PRSSC	FF FC44h	Low Frequency Clock Prescaler Register
PRSAC	FF FC46h	Auxiliary Clock Prescaler Register

11.9.1 Clock and Reset Control Register (CRCTRL)

The CRCTRL register is a byte-wide read/write register that controls the clock selection and contains the power-on reset status bit. At reset, the CRCTRL register is initialized as described below:

7	6	5	4	3	2	1	0
Reserved		POR	ACE2	ACE1	PLLPWD	FCLK	SCLK

SCLK — The Slow Clock Select bit controls the clock source used for the Slow Clock.
0 – Slow Clock driven by prescaled Main Clock.
1 – Slow Clock driven by 32.768 kHz oscillator.

FCLK — FCLK The Fast Clock Select bit selects between the 12 MHz Main Clock and the PLL as the source used for the System Clock. After reset, the Main Clock is selected. Attempting to switch to the PLL while the PLLPWD bit is set (PLL is turned off) is ignored. Attempting to switch to the PLL also has no effect if the PLL output clock has not stabilized.
0 – The System Clock prescaler is driven by the output of the PLL.
1 – The System Clock prescaler is driven by the 12-MHz Main Clock. This is the default after reset.

PLLPWD — PLLPWD The PLL Power-Down bit controls whether the PLL is active or powered down (Stop PLL signal asserted). When this bit is set, the on-chip PLL stays powered-down. Otherwise it is powered-up or it can be controlled by the Power Management Module, respectively. Before software can power-down the PLL in Active mode by setting the PLLPWD bit, the FCLK bit must be set. Attempting to set the PLLPWD bit while the FCLK bit is clear is ignored. The FCLK bit cannot be cleared until the PLL clock has stabilized. After reset this bit is set.
0 – PLL is active.
1 – PLL is powered down.

ACE1 — When the Auxiliary Clock Enable bit is set and a stable Main Clock is provided, the Auxiliary Clock 1 prescaler is enabled and generates the first Auxiliary Clock. When the ACE1 bit is clear or the Main Clock is not stable, Auxiliary Clock 1 is stopped. Auxiliary Clock 1 is used as the clock input for the Bluetooth LLC and the Advanced Audio Interface. After reset this bit is clear.
0 – Auxiliary Clock 1 is stopped.
1 – Auxiliary Clock 1 is active if the Main Clock is stable.

ACE2 — When the Auxiliary Clock Enable 2 bit is set and a stable Main Clock is provided, the Auxiliary Clock 2 prescaler is enabled and generates Auxiliary Clock 2. When the ACE2 bit is clear or the Main Clock is not stable, the Auxiliary Clock 2 is stopped. Auxiliary Clock 2 is used as the clock input for the CVSD/PCM transcoder and the A/D converter. After reset this bit is clear.
0 – Auxiliary Clock 2 is stopped.
1 – Auxiliary Clock 2 is active if the Main Clock is stable.

POR — The Power-On-Reset bit is set when a power- turn-on condition has been detected. This bit can only be cleared by software, not set. Writing a 1 to this bit will be ignored, and the previous value of the bit will be unchanged.
0 – Software cleared this bit.
1 – Software has not cleared his bit since the last reset.

Copyright © 2007–2013, Texas Instruments Incorporated

11.9.2 High Frequency Clock Prescaler Register (PRSFC)

The PRSFC register is a byte-wide read/write register that holds the 4-bit clock divisor used to generate the high-frequency clock. In addition, the upper three bits are used to control the operation of the PLL. The register is initialized to 4Fh at reset (except in PROG mode.)

7	6 4	3 0
Res	MODE	FCDIV

FCDIV The Fast Clock Divisor specifies the divisor used to obtain the high-frequency System Clock from the PLL or Main Clock. The divisor is (FCDIV + 1).

MODE The PLL MODE field specifies the operation mode of the on-chip PLL. After reset the MODE bits are initialized to 100b, so the PLL is configured to generate a 48-MHz clock. This register must not be modified when the System Clock is derived from the PLL Clock. The System Clock must be derived from the low-frequency oscillator clock while the MODE field is modified.

MODE2:0	Output Frequency (from 12 MHz input clock)	Description
000	Reserved	Reserved
001	Reserved	Reserved
010	Reserved	Reserved
011	26 MHz	3xMode
100	48 MHz	4xMode
101	60 MHz	5xMode
110	Reserved	Reserved
111	Reserved	Reserved

11.9.3 Low Frequency Clock Prescaler Register (PRSSC)

The PRSSC register is a byte-wide read/write register that holds the clock divisor used to generate the Slow Clock from the Main Clock. The register is initialized to B6h at reset.

7 0
SCDIV

SCDIV The Slow Clock Divisor field specifies a divisor to be used when generating the Slow Clock from the Main Clock. The Main Clock is divided by a value of (2 × (SCDIV + 1)) to obtain the Slow Clock. At reset, the SCDIV register is initialized to B6h, which generates a Slow Clock rate of 32786.885 Hz. This is about 0.5% faster than a Slow Clock generated from an external 32768 Hz crystal network

11.9.4 Auxiliary Clock Prescaler Register (PRSAC)

The PRSAC register is a byte-wide read/write register that holds the clock divisor values for prescalers used to generate the two auxiliary clocks from the Main Clock. The register is initialized to FFh at reset.

7 4	3 8
ACDIV2	ACDIV2

ACDIV1 The Auxiliary Clock Divisor 1 field specifies the divisor to be used for generating Auxiliary Clock 1 from the Main Clock. The Main Clock is divided by a value of (ACDIV1 + 1).

ACDIV2 The Auxiliary Clock Divisor 2 field specifies the divisor to be used for generating Auxiliary Clock 2 from the Main Clock. The Main Clock is divided by a value of (ACDIV2 + 1).

Copyright © 2007–2013, Texas Instruments Incorporated

12 POWER MANAGEMENT

The Power Management Module (PMM) improves the efficiency of the CP3BT26 by changing the operating mode (and therefore the power consumption) according to the required level of device activity. The device implements four power modes:

- Active
- Power Save
- Idle
- Halt

Table 12-1 summarizes the differences between power modes: the state of the high-frequency oscillator (on or off), the System Clock source (clock used by most modules), and the clock source used by the Timing and Watchdog Module (TWM). The high-frequency oscillator generates the 12-MHz Main Clock, and the low-frequency oscillator generates a 32.768 kHz clock. The Slow Clock can be driven by the 32.768 kHz clock or a scaled version of the Main Clock.

Table 12-1. Power Mode Operating Summary

Mode	High-Frequency Oscillator	System Clock	TWM Clock
Active	On	Main Clock	Slow Clock
Power Save	On or Off	Slow Clock	Slow Clock
Idle	On or Off	None	Slow Clock
Halt	Off	None	None

The low-frequency oscillator continues to operate in all four modes and power must be provided continuously to the device power supply pins. In Halt mode, however, Slow Clock does not toggle, and as a result, the TWM timer and Watchdog Module do not operate. For the Power Save and Idle modes, the high-frequency oscillator can be turned on or off under software control, as long as the low-frequency oscillator is used to drive Slow Clock.

Table 12-2 shows the clock sources used by the CP3BT26 device modules and their behavior in each power mode.

Table 12-2. Module Activity Summary

Module	Power Mode				Clock Source
	Active	Power Save	Idle	Halt	
CPU	On	On/Off	Off	Off	System
MIWU	On	On	Active	Active	System
PMM	On	On	On	Active	Slow Clock
TWM	On	On	On	Off	Slow Clock
USB	On/Off	On/Off	On/Off	Off	PLL Clock
Bluetooth	On/Off	On/Off	On/Off	Off	Aux 1 Clock
AAI	On/Off	On/Off	On/Off	Off	Aux 1 Clock
CVSD/PCM	On/Off	On/Off	On/Off	Off	Aux 2 Clock
ADC	On/Off	On/Off	On/Off	Off*	Aux 2 Clock
All Others	On/Off	On/Off	Off	Off	System

* The Analog/Digital Converter (ADC) module is not automatically disabled by entering Halt mode, however its clock is stopped so no conversions may be performed in Halt mode. For maximum power savings, software must disable the ADC module before entering Halt mode.

A module shown as On/Off in Table 12-2 may be enabled or disabled by software. A module shown as Active continues to operate even while its clock is suspended, which allows wake-up events to be processed during Idle and Halt modes.

Copyright © 2007–2013, Texas Instruments Incorporated

The Random Number Generator (RNG) module has two oscillators which operate independently of the rest of the system. For maximum power savings, software must disable these oscillators.

12.1 ACTIVE MODE

In Active mode, the high-frequency oscillator is active and generates the 12-MHz Main Clock. The 32.768 kHz oscillator is active and may be used to generate the Slow Clock. The PLL can be active or inactive, as required. Most on-chip modules are driven by the System Clock. The System Clock can be the PLL Clock after a programmable divider or the 12-MHz Main Clock. The activity of peripheral modules is controlled by their enable bits.

Power consumption can be reduced in this mode by selectively disabling modules and by executing the WAIT instruction. When the WAIT instruction is executed, the CPU stops executing new instructions until it receives an interrupt signal. After reset, the CP3BT26 is in Active Mode.

12.2 POWER SAVE MODE

In Power Save mode, Slow Clock is used as the System Clock which drives the CPU and most on-chip modules. If Slow Clock is driven by the 32.768 kHz oscillator and no on- chip module currently requires the 12-MHz Main Clock, soft- ware can disable the high-frequency oscillator to further reduce power consumption. Auxiliary Clocks 1 and 2 can be turned off under software control before switching to a reduced power mode, or they may remain active as long as Main Clock is also active. If the system does not require the PLL output clock, the PLL can be disabled. Alternatively, the Main Clock and the PLL can also be controlled by the Hardware Clock Control function, if enabled. The clock architecture is described in Figure 30-24.

The Bluetooth LLC can either be switched to the 32 kHz clock internally in the module, or it remains running off Auxiliary clock 1 as long as the Main Clock and Auxiliary Clock 1 are enabled Figure 30-24.

In Power Save mode, some modules are disabled or their operation is restricted. Other modules, including the CPU, continue to function normally, but operate at a reduced clock rate. Details of each module's activity in Power Save mode are described in each module's descriptions.

It is recommended to keep CPU activity at a minimum by executing the WAIT instruction to guarantee low power consumption in the system.

12.3 IDLE MODE

In Idle mode, the System Clock is disabled and therefore the clock is stopped to most modules of the device. The PLL and the high-frequency oscillator may be disabled as controlled by register bits. The low-frequency oscillator remains active. The Power Management Module (PMM) and the Timing and Watchdog Module (TWM) continue to operate off the Slow Clock. Auxiliary Clocks 1 and 2 can be turned off under software control before switching to a power saving mode, or they remain active as long as Main Clock is also active. Alternatively, the 12 MHz Main Clock and the PLL can also be controlled by the Hardware Clock Control function, if enabled.

The Bluetooth LLC can either be switched to the Slow Clock internally in the module or it remains running off the Auxiliary Clock 1 as long as the Main Clock and Auxiliary Clock 1 are enabled.

12.4 HALT MODE

In Halt mode, all the device clocks, including the System Clock, Main Clock, and Slow Clock, are disabled. The high-frequency oscillator and PLL are turned off. The low-frequency oscillator continues to operate, however its circuitry is optimized to guarantee lowest possible power consumption. This mode allows the device to reach the absolute minimum power consumption without losing its state (memory, registers, and so on.).

Copyright © 2007–2013, Texas Instruments Incorporated

12.5 HARDWARE CLOCK CONTROL

The Hardware Clock Control (HCC) mechanism gives the Bluetooth Lower Link Controller (LLC) individual control over the high-frequency oscillator and the PLL. The Bluetooth LLC can enter a Sleep mode for a specified number of low-frequency clock cycles. While the Bluetooth LLC is in Sleep mode and the CP3BT26 is in Power Save or Idle mode, the HCC mechanism may be used to control whether the high-frequency oscillator, PLL, or both units are disabled.

Altogether, three mechanisms control whether the high-frequency oscillator is active, and four mechanisms control whether the PLL is active:

- **HCC Bits:** The HCCM and HCCH bits in the PMMCR register may be used to disable the high-frequency oscillator and PLL, respectively, in Power Save and Idle modes when the Bluetooth LLC is in Sleep mode.
- **Disable Bits:** The DMC and DHC bits in the PMMCR register may be used to disable the high-frequency oscillator and PLL, respectively, in Power Save and Idle modes. When used to disable the high-frequency oscillator or PLL, the DMC and DHC bits override the HCC mechanism.
- **Power Management Mode:** Halt mode disables the high-frequency oscillator and PLL. Active Mode enables them. The DMC and DHC bits and the HCC mechanism have no effect in Active or Halt mode.
- **PLL Power Down Bit:** The PLLPWD bit in the CRCTRL register can be used to disable the PLL in all modes. This bit does not affect the high-frequency oscillator.

12.6 POWER MANAGEMENT REGISTERS

Table 12-3 lists the power management registers.

Table 12-3. Power Management Registers

Name	Address	Description
PMMCR	FF FC60h	Power Management Control Register
PMMSR	FF FC62h	Power Management Status Register

12.6.1 Power Management Control Register (PMMCR)

The Power Management Control/Status Register (PMMCR) is a byte-wide, read/write register that controls the operating power mode (Active, Power Save, Idle, or Halt) and enables or disables the high-frequency oscillator in the Power Save and Idle modes. At reset, the non-reserved bits of this register are cleared. The format of the register is shown below.

7	6	5	4	3	2	1	0
HCCH	HCCM	DHC	DMC	WBPSM	HALT	IDLE	PSM

PSM — If the Power Save Mode bit is clear and the WBPSM bit is clear, writing 1 to the PSM bit causes the device to start the switch to Power Save mode. If the WBPSM bit is set when the PSM bit is written with 1, entry into Power Save mode is delayed until execution of a WAIT instruction. The PSM bit becomes set after the switch to Power Save mode is complete. The PSM bit can be cleared by software, and it can be cleared by hardware when a hardware wake-up event is detected.
0 – Device is not in Power Save mode.
1 – Device is in Power Save mode.

IDLE — The Idle Mode bit indicates whether the device has entered Idle mode. The WBPSM bit must be set to enter Idle mode. When the IDLE bit is written with 1, the device enters IDLE mode at the execution of the next WAIT instruction. The IDLE bit can be set and cleared by software. It is also cleared by the hardware when a hardware wake-up event is detected.
0 – Device is not in Idle mode.
1 – Device is in Idle mode.

HALT — The Halt Mode bit indicates whether the device is in Halt mode. Before entering Halt mode, the WBPSM bit must be set. When the HALT bit is written with 1, the device enters the Halt mode at the execution of the next WAIT instruction. When in HALT mode, the PMM stops the System Clock and then turns off the PLL and the high-frequency oscillator. The HALT bit can be set and cleared by software. The Halt mode is exited by a hardware wake-up event. When this signal is set high, the oscillator is started. After the oscillator has stabilized, the HALT bit is cleared by the hardware.
0 – Device is not in Halt mode.
1 – Device is in Halt mode.

WBPSM — When the Wait Before Power Save Mode bit is clear, a switch from Active mode to Power Save mode only requires setting the PSM bit. When the WBPSM bit is set, a switch from Active mode to Power Save, Idle, or Halt mode is performed by setting the PSM, IDLE or HALT bit, respectively, and then executing a WAIT instruction. Also, if the DMC or DHC bits are set, the high-frequency oscillator and PLL may be disabled only after a WAIT instruction is executed and the Power Save, Idle, or Halt mode is entered.
0 – Mode transitions may occur immediately.
1 – Mode transitions are delayed until the next WAIT instruction is executed.

DMC — The Disable Main Clock bit may be used to disable the high-frequency oscillator in Power Save and Idle modes. In Active mode, the high-frequency oscillator is enabled without regard to the DMC value. In Halt mode, the high-frequency oscillator is disabled without regard to the DMC value. The DMC bit is cleared by hardware when a hardware wake- up event is detected.
0 – High-frequency oscillator is only disabled in Halt mode or when disabled by the HCC mechanism.
1 – High-frequency oscillator is also disabled in Power Save and Idle modes.

DHC — The Disable High-Frequency (PLL) Clock bit and the CRCTRL.PLLPWD bit may be used to disable the PLL in Power Save and Idle modes. When the DHC bit is clear (and PLL- PWD = 0), the PLL is enabled in these modes. If the DHC bit is set, the PLL is disabled in Power Save and Idle mode. In Active mode with the CRCTRL.PLLPWD bit set, the PLL is enabled without regard to the DHC value. In Halt mode, the PLL is disabled without regard to the DMC value. The DHC bit is cleared by hardware when a hardware wake-up event is detected.
0 – PLL is disabled only by entering Halt mode or setting the CRCTRL.PLLPWD bit.
1 – PLL is also disabled in Power Save or Idle mode.

HCCM — The Hardware Clock Control for Main Clock bit may be used in Power Save and Idle modes to disable the high-frequency oscillator conditionally, depending on whether the Bluetooth LLC is in Sleep mode. The DMC bit must be clear for this mechanism to operate. The HCCM bit is automatically cleared when the device enters Active mode.
0 – High-frequency oscillator is disabled in Power Save or Idle mode only if the DMC bit is set.
1 – High-frequency oscillator is also disabled if the Bluetooth LLC is idle.

HCCH — The Hardware Clock Control for High-Frequency (PLL) bit may be used in Power Save and Idle modes to disable the PLL conditionally, depending on whether the Bluetooth LLC is in Sleep mode. The DHC bit and the CRCTRL.PLLPWD bit must be clear for this mechanism to operate. The HCCH bit is automatically cleared when the device enters Active mode.
0 – PLL is disabled in Power Save or Idle mode only if the DMC bit or the CRCTRL.PLLPWD bit is set.
1 – PLL is also disabled if the Bluetooth LLC is idle.

Copyright © 2007–2013, Texas Instruments Incorporated

12.6.2 Power Management Status Register (PMMSR)

The Management Status Register (PMMR) is a byte-wide, read/write register that provides status signals for the various clocks. The reset value of PMSR register bits 0 to 2 depend on the status of the clock sources monitored by the PMM. The upper 5 bits are clear after reset. The format of the register is shown below.

7 – 3	2	1	0
Reserved	OHC	OMC	OLC

OLC	The Oscillating Low Frequency Clock bit indicates whether the low-frequency oscillator is producing a stable clock. When the low-frequency oscillator is unavailable, the PMM will not switch to Power Save, Idle, or Halt mode. 0 – Low-frequency oscillator is unstable, disabled, or not oscillating. 1 – Low-frequency oscillator is available.
OMC	The Oscillating Main Clock bit indicates whether the high-frequency oscillator is producing a stable clock. When the high-frequency oscillator is unavailable, the PMM will not switch to Active mode. 0 – High-frequency oscillator is unstable, disabled, or not oscillating. 1 – High-frequency oscillator is available
OHC	The Oscillating High Frequency (PLL) Clock bit indicates whether the PLL is producing a stable clock. Because the PMM tests the stability of the PLL clock to qualify power mode state transitions, a stable clock is indicated when the PLL is disabled. This removes the stability of the PLL clock from the test when the PLL is disabled. When the PLL is enabled but unstable, the PMM will not switch to Active mode. 0 – PLL is enabled but unstable. 1 – PLL is stable or disabled (CRCTRL.PLLPWD = 0).

12.7 SWITCHING BETWEEN POWER MODES

Switching from a higher to a lower power consumption mode is performed by writing an appropriate value to the Power Management Control/Status Register (PMMCR). Switching from a lower power consumption mode to the Active mode is usually triggered by a hardware interrupt. **Figure 12-1** shows the four power consumption modes and the events that trigger a transition from one mode to another.

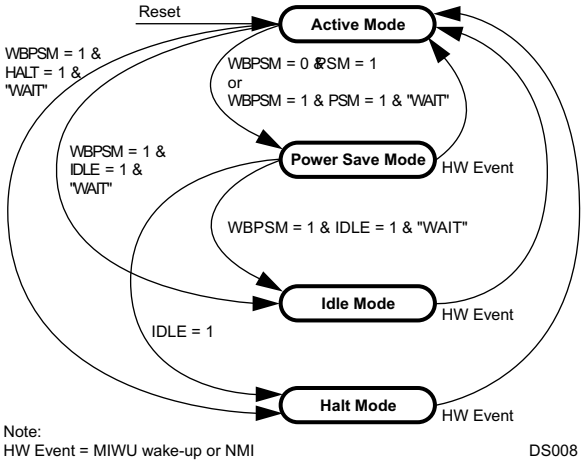

Figure 12-1. Power Mode State Diagram

Some of the power-up transitions are based on the occurrence of a wake-up event. An event of this type can be either a maskable interrupt or a non-maskable interrupt (NMI). All of the maskable hardware wake-up events are monitored by the Multi-Input Wake-Up (MIWU) Module, which is active in all modes. Once a wake-up event is detected, it is latched until an interrupt acknowledge cycle occurs or a reset is applied.

A wake-up event causes a transition to the Active mode and restores normal clock operation, but does not start execution of the program. It is the interrupt handler associated with the wake-up source (MIWU or NMI) that causes program execution to resume.

12.7.1 Active Mode to Power Save Mode

A transition from Active mode to Power Save mode is performed by writing a 1 to the PMMCR.PSM bit. The transition to Power Save mode is either initiated immediately or at execution of the next WAIT instruction, depending on the state of the PMMCR.WBPSM bit.

For an immediate transition to Power Save mode (PMMCR.WBPSM = 0), the CPU continues to operate using the low-frequency clock. The PMMCR.PSM bit becomes set when the transition to the Power Save mode is completed.

For a transition at the next WAIT instruction (PMMCR.WBPSM = 1), the CPU continues to operate in Active mode until it executes a WAIT instruction. At execution of the WAIT instruction, the device enters the Power Save mode, and the CPU waits for the next interrupt event. In this case, the PMMCR.PSM bit becomes set when it is written, even before the WAIT instruction is executed.

12.7.2 Entering Idle Mode

Entry into Idle mode is performed by writing a 1 to the PMMCR.IDLE bit and then executing a WAIT instruction. The PMMCR.WBPSM bit must be set before the WAIT instruction is executed. Idle mode can be entered only from the Active or Power Save mode.

12.7.3 Disabling the High-Frequency Clock

When the low-frequency oscillator is used to generate the Slow Clock, power consumption can be reduced further in the Power Save or Idle mode by disabling the high frequency oscillator. This is accomplished by writing a 1 to the PMMCR.DHC bit before executing the WAIT instruction that puts the device in the Power Save or Idle mode. The high- frequency clock is turned off only after the device enters the Power Save or Idle mode.

The CPU operates on the low-frequency clock in Power Save mode. It can turn off the high-frequency clock at any time by writing a 1 to the PMMCR.DHC bit. The high-frequency oscillator is always enabled in Active mode and always disabled in Halt mode, without regard to the PMMCR.DHC bit setting.

Immediately after power-up and entry into Active mode, software must wait for the low-frequency clock to become stable before it can put the device in Power Save mode. It should monitor the PMMSR.OLC bit for this purpose. Once this bit is set, Slow Clock is stable and Power Save mode can be entered.

12.7.4 Entering Halt Mode

Entry into Halt mode is accomplished by writing a 1 to the PMMCR.HALT bit and then executing a WAIT instruction. The PMMCR.WBPSM bit must be set before the WAIT instruction is executed. Halt mode can be entered only from Active or Power Save mode.

12.7.5 Software-Controlled Transition to Active Mode

A transition from Power Save mode to Active mode can be accomplished by either a software command or a hardware wake-up event. The software method is to write a 0 to the PMMCR.PSM bit. The value of the register bit changes only after the transition to the Active mode is completed.

If the high-frequency oscillator is disabled for Power Save operation, the oscillator must be enabled and allowed to stabilize before the transition to Active mode. To enable the high-frequency oscillator, software writes a 0 to the PMMCR.DMC bit. Before writing a 0 to the PMMCR.PSM bit, software must first monitor the PMMSR.OMC bit to determine when the oscillator has stabilized.

Copyright © 2007–2013, Texas Instruments Incorporated

12.7.6 Wake-Up Transition to Active Mode

A hardware wake-up event switches the device directly from Power Save, Idle, or Halt mode to Active mode. Hardware wake-up events are:

- Non-Maskable Interrupt (NMI)
- Valid wake-up event on a Multi-Input Wake-Up channel

When a wake-up event occurs, the on-chip hardware performs the following steps:

1. Clears the PMMCR.DMC bit, which enables the highfrequency clock (if it was disabled).
2. Waits for the PMMSR.OMC bit to become set, which indicates that the high-frequency clock is operating and is stable.
3. Clears the PMMCR.DHC bit, which enables the PLL.
4. Waits for the PMMSR.OHC bit to become set.
5. Switches the device into Active mode.

12.7.7 Power Mode Switching Protection

The Power Management Module has several mechanisms to protect the device from malfunctions caused by missing or unstable clock signals.

The PMMSR.OHC, PMMSR.OMC, and PMMSR.OLC bits indicate the current status of the PLL, high-frequency oscillator, and low-frequency oscillator, respectively. Software can check the appropriate bit before switching to a power mode that requires the clock. A set status bit indicates an operating, stable clock. A clear status bit indicates a clock that is disabled, not available, or not yet stable. (Except in the case of the PLL, which has a set status bit when disabled.)

During a power mode transition, if there is a request to switch to a mode with a clear status bit, the switch is delayed until that bit is set by the hardware.

When the system is built without an external crystal network for the low-frequency clock, Main Clock is divided by a prescaler factor to produce the low-frequency clock. In this situation, Main Clock is disabled only in the Halt mode, and cannot be disabled for the Power Save or Idle mode.

Without an external crystal network for the low-frequency clock, the device comes out of Halt or Idle mode and enters Active mode with Main Clock driving Slow Clock.

Note: For correct operation in the absence of a low-frequency crystal, the X2CKI pin must be tied low (not left floating) so that the hardware can detect the absence of the crystal.

Copyright © 2007–2013, Texas Instruments Incorporated

13 MULTI-INPUT WAKE-UP

The Multi-Input Wake-Up (MIWU) unit consists of two identical 16-channel modules. Each module can assert a wake- up signal for exiting from a low-power mode, and each can assert an interrupt request on any of four Interrupt Control Unit (ICU) channels assigned to that module. The modules operate independently, so each may assert an interrupt request to the ICU. Together, these modules provide 32 MIWU input channels and 8 interrupt request outputs.

Each 16-channel module monitors its inputs for a software- selectable trigger condition. On detection of a trigger condition, the module generates an interrupt request and if enabled, a wake-up request. A wake-up request can be used by the power management unit to exit the Halt, Idle, or Power Save mode and return to the Active mode. An interrupt request generates an interrupt to the CPU, which allows an interrupt handler to respond to MIWU events.

The wake-up event only activates the clocks and CPU, but does not by itself initiate execution of any code. It is the interrupt request asserted by the MIWU that gets the CPU to start executing code, by jumping to the corresponding interrupt handler. Therefore, setting up the MIWU interrupt handler is essential for any wake-up operation.

Each 16-channel module has four interrupt requests that can be routed to the ICU as shown in Figure 24-4. Each of the 16 channels can be programmed to activate one of these four interrupt requests.

The 32 MIWU channels are named WUI0 through WUI31, as shown in Table 13-1.

Each channel can be configured to trigger on rising or falling edges, as determined by the setting in the WK0EDG or WK1EDG register. Each trigger event is latched into the WK0PND or WK1PND register. If a trigger event is enabled by its respective bit in the WK0ENA or WK1ENA register, an active wake-up/interrupt signal is generated. Software can determine which channel has generated the active signal by reading the WK0PND or WK1PND register.

The MIWU is active at all times, including the Halt mode. All device clocks are stopped in this mode. Therefore, detecting an external trigger condition and the subsequent setting of the pending bit are not synchronous to the System Clock.

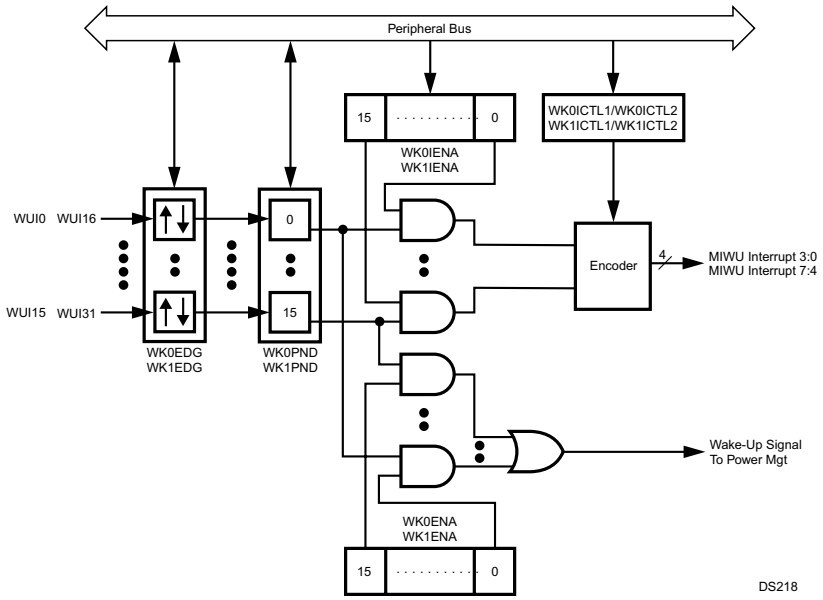

Figure 13-1. Multi-Input Wake-Up Module Block Diagram

Copyright © 2007–2013, Texas Instruments Incorporated

Table 13-1. MIWU Sources

MIWU Channel	Source
WUI0	TWM T0OUT
WUI1	ACCESS.bus
WUI2	CANRX
WUI3	MWCS
WUI4	UART0 CTS
WUI5	UART0 RXD
WUI6	Bluetooth LLC
WUI7	AAI SFS
WUI8	USB Wake-Up
WUI9	PJ7
WUI10	PG6
WUI11	PH0
WUI12	PH1
WUI13	PH2
WUI14	PH3
WUI15	PH4
WUI16	PH5
WUI17	PH6
WUI18	PJ0
WUI19	PJ1
WUI20	PJ2
WUI21	PJ3
WUI22	PJ4
WUI23	PJ5
WUI24	PJ6
WUI25	Reserved
WUI26	UART1 RXD
WUI27	UART2 RXD
WUI28	UART3 RXD
WUI29	Reserved
WUI30	ADC Done
WUI31	Reserved

Copyright © 2007–2013, Texas Instruments Incorporated

13.1 MULTI-INPUT WAKE-UP REGISTERS

Table 13-2 lists the MIWU registers.

Table 13-2. Multi-Input Wake-Up Registers

Name	Address	Description
WK0EDG	FF FC80h	Wake-Up Edge Detection Register Module 0
WK1EDG	FF FCA0h	Wake-Up Edge Detection Register Module 1
WK0ENA	FF FC82h	Wake-Up Enable Register Module 0
WK1ENA	FF FCA2h	Wake-Up Enable Register Module 1
WK0ICTL1	FF FC84h	Wake-Up Interrupt Control Register 1 Module 0
WK1ICTL1	FF FCA4h	Wake-Up Interrupt Control Register 1 Module 1
WK0ICTL2	FF FC86h	Wake-Up Interrupt Control Register 2 Module 0
WK1ICTL2	FF FCA6h	Wake-Up Interrupt Control Register 2 Module 1
WK0PND	FF FC88h	Wake-Up Pending Register Module 0
WK1PND	FF FCA8h	Wake-Up Pending Register Module 1
WK0PCL	FF FC8Ah	Wake-Up Pending Clear Register Module 0
WK1PCL	FF FCAAh	Wake-Up Pending Clear Register Module 1
WK0IENA	FF FC8Ch	Wake-Up Interrupt Enable Register Module 0
WK1IENA	FF FCACh	Wake-Up Interrupt Enable Register Module 1

13.1.1 Wake-Up Edge Detection Register (WK0EDG)

The WK0EDG register is a word-wide read/write register that controls the edge sensitivity of the MIWU channels. The WK0EDG register is cleared upon reset, which configures all channels to be triggered on rising edges. The register format is shown below.

15	0
WKED	

WKED The Wake-Up Edge Detection bits control the edge sensitivity for MIWU channels. The WKED15:0 bits correspond to the WUI15:0 channels, respectively.
0 – Triggered on rising edge (low-to-high transition).
1 – Triggered on falling edge (high-to-low transition).

13.1.2 Wake-Up 1 Edge Detection Register (WK1EDG)

The WK1EDG register is a word-wide read/write register that controls the edge sensitivity of the MIWU channels. The WK1EDG register is cleared upon reset, which configures all channels to be triggered on rising edges. The register format is shown below.

15	0
WKED	

WKED The Wake-Up Edge Detection bits control the edge sensitivity for MIWU channels. The WKED15:0 bits correspond to the WUI31:16 channels, respectively.
0 – Triggered on rising edge (low-to-high transition).
1 – Triggered on falling edge (high-to-low transition).

Copyright © 2007–2013, Texas Instruments Incorporated

13.1.3 Wake-Up Enable Register (WK0ENA)

The WK0ENA register is a word-wide read/write register that individually enables or disables wake-up events from the MIWU channels. The WK0ENA register is cleared upon reset, which disables all wake-up/interrupt channels. The register format is shown below.

15		0
	WKEN	

WKEN	The Wake-Up Enable bits enable and disable the MIWU channels. The WKEN15:0 bits correspond to the WUI15:0 channels, respectively. 0 – MIWU channel wake-up events disabled. 1 – MIWU channel wake-up events enabled.

13.1.4 Wake-Up 1 Enable Register (WK1ENA)

The WK1ENA register is a word-wide read/write register that individually enables or disables wake-up events from the MIWU channels. The WK1ENA register is cleared upon reset, which disables all wake-up/interrupt channels. The register format is shown below.

15		0
	WKEN	

WKEN	The Wake-Up Enable bits enable and disable the MIWU channels. The WKEN15:0 bits correspond to the WUI31:16 channels, respectively. 0 – MIWU channel wake-up events disabled. 1 – MIWU channel wake-up events enabled.

13.1.5 Wake-Up Interrupt Enable Register (WK0IENA)

15		0
	WKIEN	

WKIEN	The Wake-Up Interrupt Enable bits control whether MIWU channels generate interrupts. The WKIEN15:0 bits correspond to the WUI15:0 channels, respectively. 0 – Interrupt disabled. 1 – Interrupt enabled.

13.1.6 Wake-Up 1 Interrupt Enable Register (WK1IENA)

The WK1IENA register is a word-wide read/write register that enables and disables interrupts from the MIWU channels. The register format is shown below.

15	0
WKEN	

WK1IEN The Wake-Up Interrupt Enable bits control whether MIWU channels generate interrupts. The WKIEN15:0 bits correspond to the WUI31:16 channels, respectively.
0 – Interrupt disabled.
1 – Interrupt enabled.

13.1.7 Wake-Up Interrupt Control Register 1 (WK0ICTL1)

The WK0ICTL1 register is a word-wide read/write register that selects the interrupt request signal for the associated MIWU channels WUI7:0. At reset, the WK0ICTL1 register is cleared, which selects MIWU Interrupt Request 0 for all eight channels. The register format is shown below.

15 14	13 12	11 10	9 8	7 6	5 4	3 2	1 0
WKIN TR7	WKIN TR6	WKIN TR5	WKIN TR4	WKIN TR3	WKIN TR2	WKIN TR1	WKIN TR0

WKINTR The Wake-Up Interrupt Request Select fields select which of the four MIWU interrupt requests are activated for the corresponding channel.
00 – Selects MIWU interrupt request 0.
01 – Selects MIWU interrupt request 1.
10 – Selects MIWU interrupt request 2.
11 – Selects MIWU interrupt request 3.

13.1.8 Wake-Up 1 Interrupt Control Register 1 (WK1ICTL1)

The WK1ICTL1 register is a word-wide read/write register that selects the interrupt request signal for the associated MIWU channels WUI23:16. At reset, the WK1ICTL1 register is cleared, which selects MIWU Interrupt Request 4 for all eight channels. The register format is shown below.

15 14	13 12	11 10	9 8	7 6	5 4	3 2	1 0
WKIN TR23	WKIN TR22	WKIN TR21	WKIN TR20	WKIN TR19	WKIN TR18	WKIN TR17	WKIN TR16

WKINTR The Wake-Up Interrupt Request Select fields select which of the four MIWU interrupt requests are activated for the corresponding channel.
00 – Selects MIWU interrupt request 4.
01 – Selects MIWU interrupt request 5.
10 – Selects MIWU interrupt request 6.
11 – Selects MIWU interrupt request 7.

13.1.9 Wake-Up Interrupt Control Register 2 (WK0ICTL2)

The WK0ICTL2 register is a word-wide read/write register that selects the interrupt request signal for the associated MIWU channels WUI15:8. At reset, the WK2ICTL2 register is cleared, which selects MIWU Interrupt Request 0 for all eight channels. The register format is shown below.

15 14	13 12	11 10	9 8	7 6	5 4	3 2	1 0
WKIN TR15	WKIN TR14	WKIN TR13	WKIN TR12	WKIN TR11	WKIN TR10	WKIN TR9	WKIN TR8

WKINTR The Wake-Up Interrupt Request Select fields select which of the four MIWU interrupt requests are activated for the corresponding channel.
00 – Selects MIWU interrupt request 0.
01 – Selects MIWU interrupt request 1
10 – Selects MIWU interrupt request 2.
11 – Selects MIWU interrupt request 3.

Copyright © 2007–2013, Texas Instruments Incorporated

13.1.10 Wake-Up 1 Interrupt Control Register 2 (WK1ICTL2)

The WK1ICTL2 register is a word-wide read/write register that selects the interrupt request signal for the associated MIWU channels WUI31:24. At reset, the WK1ICTL2 register is cleared, which selects MIWU Interrupt Request 4 for all eight channels. The register format is shown below.

15 14	13 12	11 10	9 8	7 6	5 4	3 2	1 0
WKIN TR31	WKIN TR30	WKIN TR29	WKIN TR28	WKIN TR27	WKIN T26	WKIN TR25	WKIN TR24

WKINTR The Wake-Up Interrupt Request Select fields select which of the four MIWU interrupt requests are activated for the corresponding channel.
00 – Selects MIWU interrupt request 4.
01 – Selects MIWU interrupt request 5.
10 – Selects MIWU interrupt request 6.
11 – Selects MIWU interrupt request 7.

13.1.11 Wake-Up Pending Register (WK0PND)

The WK0PND register is a word-wide read/write register in which the Multi-Input Wake-Up module latches any detected trigger conditions. The CPU can only write a 1 to any bit position in this register. If the CPU attempts to write a 0, it has no effect on that bit. To clear a bit in this register, the CPU must use the WK0PCL register. This implementation prevents a potential hardware-software conflict during a read-modify-write operation on the WK0PND register.

This register is cleared upon reset. The register format is shown below.

15	0
WKPD	

WKPD The Wake-Up Pending bits indicate which MIWU channels have been triggered. The WKPD15:0 bits correspond to the WUI15:0 channels. Writing 1 to a bit sets it.
0 – Trigger condition did not occur.
1 – Trigger condition occurred.

13.1.12 Wake-Up 1 Pending Register (WK1PND)

The WK1PND register is a word-wide read/write register in which the Multi-Input Wake-Up module latches any detected trigger conditions. The CPU can only write a 1 to any bit position in this register. If the CPU attempts to write a 0, it has no effect on that bit. To clear a bit in this register, the CPU must use the WK1PCL register. This implementation prevents a potential hardware-software conflict during a read-modify-write operation on the WK1PND register.

This register is cleared upon reset. The register format is shown below.

15	0
WKPD	

WKPD The Wake-Up Pending bits indicate which MIWU channels have been triggered. The WKPD15:0 bits correspond to the WUI31:15 channels. Writing 1 to a bit sets it.
0 – Trigger condition did not occur.
1 – Trigger condition occurred.

Copyright © 2007–2013, Texas Instruments Incorporated

13.1.13 Wake-Up Pending Clear Register (WK0PCL)

The WK0PCL register is a word-wide write-only register that lets the CPU clear bits in the WKPND register. Writing a 1 to a bit position in the WKPCL register clears the corresponding bit in the WKPND register. Writing a 0 has no effect. Do not modify this register with instructions that access the register as a read-modify-write operand, such as the bit manipulation instructions.

Reading this register location returns undefined data. Therefore, do not use a read-modify-write sequence (such as the SBIT instruction) to set individual bits. Do not attempt to read the register, then perform a logical OR on the register value. Instead, write the mask directly to the register address. The register format is shown below.

15															0
WKCL															

WKCL Writing 1 to a bit clears it.
0 – Writing 0 has no effect.
1 – Writing 1 clears the corresponding bit in the WKPD register.

13.1.14 Wake-Up 1 Pending Clear Register (WK1PCL)

The WK1PCL register is a word-wide write-only register that lets the CPU clear bits in the WK1PND register. Writing a 1 to a bit position in the WK1PCL register clears the corresponding bit in the WK1PND register. Writing a 0 has no effect. Do not modify this register with instructions that access the register as a read-modify-write operand, such as the bit manipulation instructions.

Reading this register location returns undefined data. Therefore, do not use a read-modify-write sequence (such as the SBIT instruction) to set individual bits. Do not attempt to read the register, then perform a logical OR on the register value. Instead, write the mask directly to the register address. The register format is shown below.

15															0
WKCL															

WKCL Writing 1 to a bit clears it.
0 – Writing 0 has no effect.
1 – Writing 1 clears the corresponding bit in the WK1PD register.

13.2 PROGRAMMING PROCEDURES

To set up and use the Multi-Input Wake-Up function, use the following procedure. Performing the steps in the order shown will prevent false triggering of a wake-up condition. This same procedure should be used following a reset because the wake-up inputs are left floating, resulting in unknown data on the input pins.

1. Clear the WK0ENA and WK1ENA registers to disable wake-up events from the MIWU channels. Clear the WK0IENA and WK1IENA registers to disable interrupt requests from the MIWU channels.
2. If the MIWU channel comes from a GPIO pin, select the appropriate alternate function.
3. Write the WK0EDG and WK1EDG registers to select the desired type of edge sensitivity (clear for rising edge, set for falling edge).
4. Set all bits in the WK0PCL and WK0PCL registers to clear any pending bits in the WK0PND and WK1PND registers.
5. Set up the WK0ICTL1, WK1ICTL1, WK0ICTL2, and WK1ICTL2 registers to define the interrupt request signal used for each channel.
6. Set the bits in the WK0ENA and WK1ENA registers corresponding to the wake-up channels to be activated.

Copyright © 2007–2013, Texas Instruments Incorporated

To change the edge sensitivity of a wake-up channel, use the following procedure. Performing the steps in the order shown will prevent false triggering of a wake-up/interrupt condition.

1. Clear the WK0ENA or WK1ENA bit associated with the input to be reprogrammed.
2. Write the new value to the corresponding bit position in the WK0EDG or WK1EDG register to reprogram the edge sensitivity of the input.
3. Set the corresponding bit in the WK0PCL or WK1PCL register to clear the pending bit in the WK0PND or WK1PND register.
4. Set the same WK0ENA or WK1ENA bit to re-enable the wake-up function.

14 INPUT/OUTPUT PORTS

Each device has up to 54 software-configurable I/O pins, organized into 8-bit ports (not all bits are used in some ports). The ports are named Port B, Port C, Port E, Port F, Port G, Port H, and Port J.

In addition to their general-purpose I/O capability, the I/O pins of Ports E, F, G, H, and J have alternate functions for use with on-chip peripheral modules such as the UART or the Multi-Input Wake-Up unit. The alternate functions of all I/O pins are shown in Figure 14-1.

Ports B and C are used as the 16-bit data bus when an external bus is enabled (144-pin devices only). This alternate function is selected by enabling the DEV or ERE operating environments, not by programming the port registers.

The I/O pin characteristics are fully programmable. Each pin can be configured to operate as a TRI-STATE output, push-pull output, weak pull-up input, or high-impedance input. Different pins within the same port can be individually configured to operate in different modes.

Figure 14-1 is a diagram showing the I/O port pin logic. The register bits, multiplexers, and buffers allow the port pin to be configured into the various operating modes. The output buffer is a TRI-STATE buffer with weak pull-up capability. The weak pull-up, if used, prevents the port pin from going to an undefined state when it operates as an input.

To reduce power consumption, input buffers configured for general-purpose I/O are only enabled when they are read. When configured for an alternate function, the input buffers are enabled continuously. To minimize power consumption, input signals to enabled buffers must be held within 0.2 volts of the VCC or GND voltage.

The electrical characteristics and drive capabilities of the input and output buffers are described in Electrical Characteristics.

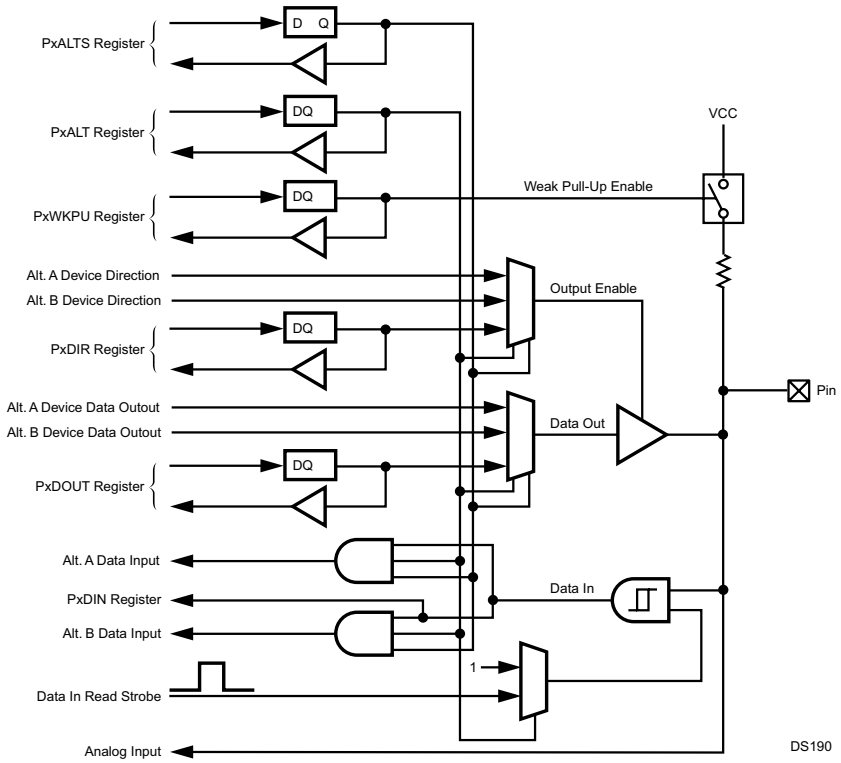

Figure 14-1. I/O Port Pin Logic

Copyright © 2007–2013, Texas Instruments Incorporated

14.1 PORT REGISTERS

Each port has an associated set of memory-mapped registers used for controlling the port and for holding the port data:

- PxALT: Port alternate function register
- PxALTS: Port alternate function select register
- PxDIR: Port direction register
- PxDIN: Port data input register
- PxDOUT: Port data output register
- PxWPU: Port weak pull-up register
- PxHDRV: Port high drive strength register

Table 14-1. Port Registers

Name	Address	Description
PBALT	FF FB00h	Port B Alternate Function Register
PBDIR	FF FB02h	Port B Direction Register
PBDIN	FF FB04h	Port B Data Input Register
PBDOUT	FF FB06h	Port B Data Output Register
PBWPU	FF FB08h	Port B Weak Pull-Up Register
PBHDRV	FF FB0Ah	Port B High Drive Strength Register
PBALTS	FF FB0Ch	Port B Alternate Function Select Register
PCALT	FF FB10h	Port C Alternate Function Register
PCDIR	FF FB12h	Port C Direction Register
PCDIN	FF FB14h	Port C Data Input Register
PCDOUT	FF FB16h	Port C Data Output Register
PCWPU	FF FB18h	Port C Weak Pull-Up Register
PCHDRV	FF FB1Ah	Port C High Drive Strength Register
PCALTS	FF FB1Ch	Port C Alternate Function Select Register
PEALT	FF FCC0h	Port E Alternate Function Register
PEDIR	FF FCC2h	Port E Direction Register
PEDIN	FF FCC4h	Port E Data Input Register
PEDOUT	FF FCC6h	Port E Data Output Register
PEWPU	FF FCC8h	Port E Weak Pull-Up Register
PEHDRV	FF FCCAh	Port E High Drive Strength Register
PEALTS	FF FCCCh	Port E Alternate Function Select Register
PFALT	FF FCE0h	Port F Alternate Function Register
PFDIR	FF FCE2h	Port F Direction Register
PFDIN	FF FCE4h	Port F Data Input Register
PFDOUT	FF FCE6h	Port F Data Output Register
PFWPU	FF FCE8h	Port F Weak Pull-Up Register
PFHDRV	FF FCEAh	Port F High Drive Strength Register
PFALTS	FF FCECh	Port F Alternate Function Select Register
PGALT	FF F300h	Port G Alternate Function Register
PGDIR	FF F302h	Port G Direction Register
PGDIN	FF F304h	Port G Data Input Register
PGDOUT	FF F306h	Port G Data Output Register
PGWPU	FF F308h	Port G Weak Pull-Up Register
PGHDRV	FF F30Ah	Port G High Drive Strength Register
PGALTS	FF F30Ch	Port G Alternate Function Select Register

Copyright © 2007–2013, Texas Instruments Incorporated

Table 14-1. Port Registers (continued)

PHALT	FF F320h	Port H Alternate Function Register
PHDIR	FF F322h	Port H Direction Register
PHDIN	FF F324h	Port H Data Input Register
PHDOUT	FF F326h	Port H Data Output Register
PHWPU	FF F328h	Port H Weak Pull-Up Register
PHHDRV	FF F32Ah	Port H High Drive Strength Register
PHALTS	FF F32Ch	Port H Alternate Function Select Register
PJALT	FF F340h	Port J Alternate Function Register
PJDIR	FF F342h	Port J Direction Register
PJDIN	FF F344h	Port J Data Input Register
PJDOUT	FF F346h	Port J Data Output Register
PJWPU	FF F348h	Port J Weak Pull-Up Register
PJHDRV	FF F34Ah	Port J High Drive Strength Register
PJALTS	FF F34Ch	Port J Alternate Function Select Register

In the descriptions of the ports and port registers, the lower-case letter “x” represents the port designation, either B, C, E, F, G, H, or J. For example, “PxDIR register” means any one of the port direction registers: PBDIR, PCDIR, PEDIR, PFDIR, PGDIR, PHDIR, or PJDIR.

All of the port registers are byte-wide read/write registers, except for the port data input registers, which are read-only registers. Each register bit controls the function of the corresponding port pin. For example, PGDIR.2 (bit 2 of the PGDIR register) controls the direction of port pin PG2.

14.1.1 Port Alternate Function Register (PxALT)

The PxALT registers control whether the port pins are used for general-purpose I/O or for their alternate function. Each port pin can be controlled independently.

A clear bit in the alternate function register causes the corresponding pin to be used for general-purpose I/O. In this configuration, the output buffer is controlled by the direction register (PxDIR) and the data output register (PxDOUT). The input buffer is visible to software as the data input register (PxDIN).

A set bit in the alternate function register (PxALT) causes the corresponding pin to be used for its peripheral I/O function. When the alternate function is selected, the output buffer data and TRI-STATE configuration are controlled by signals from the on-chip peripheral device.

A reset operation clears the port alternate function registers, which initializes the pins as general-purpose I/O ports. This register must be enabled before the corresponding alternate function is enabled.

7							0
PxALT							

PXALT The PxALT bits control whether the corresponding port pins are general-purpose I/O ports or are used for their alternate function by an on-chip peripheral.
0 – General-purpose I/O selected.
1 – Alternate function selected.

Copyright © 2007–2013, Texas Instruments Incorporated

14.1.2 Port Direction Register (PxDIR)

The port direction register (PxDIR) determines whether each port pin is used for input or for output. A clear bit in this register causes the corresponding pin to operate as an input, which puts the output buffer in the high-impedance state. A set bit causes the pin to operate as an output, which enables the output buffer.

A reset operation clears the port direction registers, which initializes the pins as inputs.

7							0
PXDIR							

PxDIR — The PxDIR bits select the direction of the corresponding port pin.
0 – Input.
1 – Output.

14.1.3 Port Data Input Register (PxDIN)

The data input register (PxDIN) is a read-only register that returns the current state on each port pin. The CPU can read this register at any time even when the pin is configured as an output.

7							0
PxDIN							

PxDIN — The PxDIN bits indicate the state on the corresponding port pin.
0 – Pin is low.
1 – Pin is high.

14.1.4 Port Data Output Register (PxDOUT)

The data output register (PxDOUT) holds the data to be driven on output port pins. In this configuration, writing to the register changes the output value. Reading the register returns the last value written to the register.

A reset operation leaves the register contents unchanged. At power-up, the PxDOUT registers contain unknown values.

A reset operation clears the port weak pull-up registers, which disables all pull-ups.

7							0
PxDOUT							

PxDOUT — The PxDOUT bits hold the data to be driven on pins configured as outputs in general-purpose I/O mode.
0 – Drive the pin low.
1 – Drive the pin high.

Copyright © 2007–2013, Texas Instruments Incorporated

14.1.5 Port Weak Pull-Up Register (PxWPU)

The weak pull-up register (PxWPU) determines whether the port pins have a weak pull-up on the output buffer. The pull-up device, if enabled by the register bit, operates in the general-purpose I/O mode whenever the port output buffer is disabled. In the alternate function mode, the pull-ups are always disabled.

A reset operation clears the port weak pull-up registers, which disables all pull-ups.

7							0
PxWPU							

PxWPU The PxWPU bits control whether the weak pull-up is enabled.
0 – Weak pull-up disabled.
1 – Weak pull-up enabled.

14.1.6 Port High Drive Strength Register (PxHDRV)

The PxHDRV register is a byte-wide, read/write register that controls the slew rate of the corresponding pins. The high drive strength function is enabled when the corresponding bits of the PxHDRV register are set. In both GPIO and alternate function modes, the drive strength function is enabled by the PxHDRV registers. At reset, the PxHDRV registers are cleared, making the ports low speed.

7							0
PxHDRV							

PxHDRV The PxHDRV bits control whether output pins are driven with slow or fast slew rate.
0 – Slow slew rate.
1 – Fast slew rate.

14.1.7 Port Alternate Function Select Register (PxALTS)

The PxALTS register selects which of two alternate functions are selected for the port pin. These bits are ignored unless the corresponding PxALT bits are set. Each port pin can be controlled independently.

7							0
PxALTS							

PxALTS The PxALTS bits select among two alternate functions. Table 14-2 shows the mapping of the PxALTS bits to the alternate functions. Unused PxALTS bits must be clear.

Copyright © 2007–2013, Texas Instruments Incorporated

Table 14-2. Alternate Function Select

PE0	UART0 RXD0	Reserved
PE1	UART0 TXD0	Reserved
PE2	UART0 $\overline{\text{RTS}}$	Reserved
PE3	UART0 $\overline{\text{CTS}}$	Reserved
PE4	UART0 CKX	TB
PE5	SRFS	$\overline{\text{NMI}}$
PF0	MSK	TIO1
PF1	MDIDO	TIO2
PF2	MDODI	TIO3
PF3	$\overline{\text{MWCS}}$	TIO4
PF4	SCK	TIO5
PF5	SFS	TIO6
PF6	STD	TIO7
PF7	SRD	TIO8
PG0	RFSYNC	Reserved
PG1	RFCE	Reserved
PG2	BTSEQ1	SRCLK
PG3	SCLK	Reserved
PG4	SDAT	Reserved
PG5	$\overline{\text{SLE}}$	Reserved
PG6	WUI10	BTSEQ2
PG7	TA	BTSEQ3
PH0	UART1 RXD1	WUI11
PH1	UART1 TXD1	WUI12
PH2	UART2 RXD2	WUI13
PH3	UART2 TXD2	WUI14
PH4	UART3 RXD3	WUI15
PH5	UART3 TXD3	WUI16
PH6	CANRX	WUI17
PH7	CANTX	Reserved
PJ0	WUI18	Reserved
PJ1	WUI19	Reserved
PJ2	WUI20	Reserved
PJ3	WUI21	Reserved
PJ4	WUI22	Reserved
PJ5	WUI23	Reserved
PJ6	WUI24	Reserved
PJ7	ASYNC	WUI9

14.2 OPEN-DRAIN OPERATION

A port pin can be configured to operate as an inverting open-drain output buffer. To do this, the CPU must clear the bit in the data output register (PxDOUT) and then use the port direction register (PxDIR) to set the value of the port pin. With the direction register bit set (direction = out), the value zero is forced on the pin. With the direction register bit clear (direction = in), the pin is placed in the TRI-STATE mode. If desired, the internal weak pull-up can be enabled to pull the signal high when the output buffer is in TRI-STATE mode.

15 BLUETOOTH CONTROLLER

The integrated hardware Bluetooth Lower Link Controller (LLC) complies to the Bluetooth Specification Version 1.1 and integrates the following functions:

- 4.5K-byte dedicated Bluetooth data RAM
- 1K-byte dedicated Bluetooth Sequencer RAM
- Support of all Bluetooth 1.1 packet types
- Support for fast frequency hopping of 1600 hops/s
- Access code correlation and slot timing recovery circuit
- Power Management Control Logic
- BlueRF-compatible interface to connect with TI's LMX5252 and other RF transceiver chips

For a detailed description of the interface to the LMX5252, consult the LMX5252 data sheet which is available from the TI wireless group. TI provides software libraries for using the Bluetooth LLC. Documentation for the software libraries is also available from TI.

15.1 RF INTERFACE

The CP3BT26 interfaces to the LMX5251 or LMX5252 radio chips though the RF interface.

Figure 15-1 shows the interface between the CP3BT26 and the LMX5251 radio chip. Figure 15-2 shows the interface between the CP3BT26 and the LMX5252 radio chip.

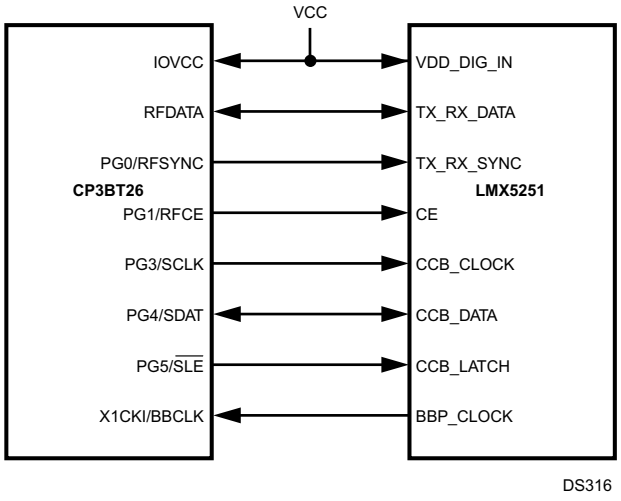

Figure 15-1. LMX5251 Interface

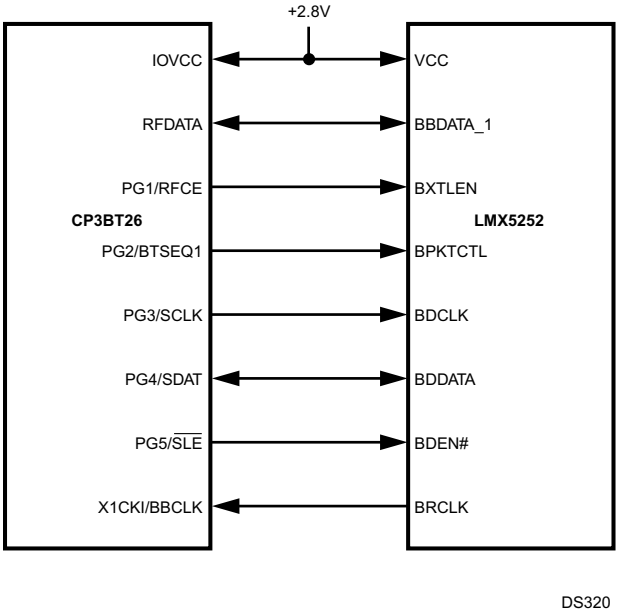

Figure 15-2. LMX5252 Interface

The CP3BT26 implements a BlueRF-compatible interface, which may be used with other RF transceiver chips.

Copyright © 2007–2013, Texas Instruments Incorporated

15.1.1 RF Interface Signals

The RF interface signals are grouped as follows:

- Modem Signals (BBCLK, RFDATA, and RFSYNC)
- Control Signal (RFCE)
- Serial Interface Signals (SCLK, SDAT, and SLE)
- Bluetooth Sequencer Status Signals (BTSEQ1, BTSEQ2, and BTSEQ2)

X1CKI/BBCLK

The X1CKI/BBCLK pin is the input signal for the 12-MHz clock signal. The radio chip uses this signal internally as the 12× oversampling clock and provides it externally to the CP3BT26 for use as the Main Clock.

RFDATA

The RFDATA signal is the multiplexed Bluetooth data receive and transmit signal. The data is provided at a bit rate of 1 Mbit/s with 12× oversampling, synchronized to the 12 MHz BBCLK. The RFDATA signal is a dedicated RF inter- face pin. This signal is driven to a logic high level after reset.

RFSYNC

In receive mode (data direction from the radio chip to the CP3BT26), the RFSYNC signal acts as the frequency correction/DC compensation circuit control output to the radio chip. The RFSYNC signal is driven low throughout the correlation phase and driven high when synchronization to the received access code is achieved.

In transmit mode (data direction from the CP3BT26 to the radio chip), the RFSYNC signal enables the RF output of the radio chip. When the RFSYNC pin is driven high, the RF transmitter circuit of the radio chip is enabled, corresponding to the settings of the power control register in the radio chip.

The RFSYNC signal is the alternate function of the general- purpose I/O pin PG0. At reset, this pin is in TRI-STATE mode. Software must enable the alternate function of the PG0 pin to give control over this signal to the RF interface.

RFCE

The RFCE signal is the chip enable output to the external RF chip. When the RFCE signal is driven high, the RF chip power is controlled by the settings of its power control registers. When the RFCE signal is driven low, the RF chip is powered-down. However, the serial interface is still operational and the CP3BT26 can still access the RF chip internal control registers.

The RFCE signal is the alternate function of the general-purpose I/O pin PG1. At reset, this pin is in TRI-STATE mode. Software must enable the alternate function of the PG1 pin to give control over this signal to the RF interface.

During Bluetooth power-down phases, the CP3BT26 provides a mechanism to reduce the power consumption of an external RF chip by driving the RFCE signal of the RF interface to a logic low level. This feature is available when the Power Management Module of the CP3BT26 has enabled the Hardware Clock Control mechanism. (However, the current version of the radio chip does not implement a power-reduction mode.)

SCLK

The SCLK signal is the serial interface shift clock output. The CP3BT26 always acts as the master of the serial interface and therefore always provides the shift clock. The SCLK signal is the alternate function of the general-purpose I/O pin PG3. At reset, this pin is in TRI-STATE mode. Software must enable the alternate function of the PG3 pin to give control over this signal to the RF interface.

Copyright © 2007–2013, Texas Instruments Incorporated

SDAT

The SDAT signal is the multiplexed serial data receive and transmit path between the radio chip and the CP3BT26.

The SDAT signal is the alternate function of the general-purpose I/O pin PG4. At reset, this pin is in TRI-STATE mode. Software must enable the alternate function of the PG4 pin to give control over this signal to the RF interface.

$\overline{\text{SLE}}$

The $\overline{\text{SLE}}$ pin is the serial load enable output of the serial interface of the CP3BT26.

During write operations (to the radio chip registers), the data received by the shift register of the radio chip is copied into the address register on the next rising edge of SCLK after the $\overline{\text{SLE}}$ signal goes high.

During read operations (read from the registers), the radio chip releases the SDAT line on the next rising edge of SCLK after the SLE signal goes high.

$\overline{\text{SLE}}$ is the alternate function of the general-purpose I/O pin PG5. At reset, this pin is in TRI-STATE mode. Software must enable the alternate function of the PG5 pin to give control over this signal to the RF interface.

BTSEQ[3:1]

The BTSEQ[3:1] signals indicate internal states of the Bluetooth sequencer, which are used for interfacing to some external devices.

Copyright © 2007–2013, Texas Instruments Incorporated

15.2 SERIAL INTERFACE

The radio chip register set can be accessed by the CP3BT26 through the serial interface. The serial interface uses three pins of the RF interface: SDAT, SCLK, and $\overline{\text{SLE}}$

The serial interface of the CP3BT26 always operates as the master, providing the shift clock (SCLK) and load enable ($\overline{\text{SLE}}$) signal to the radio chip. The radio chip always acts as the slave.

A 25-bit shift protocol is used to perform read/write accesses to the radio chip internal registers. The complete protocol is comprised of the following sections:

- 3-bit Header Field
- Read/Write Bit
- 5-bit Address Field
- 16-bit Data Field

Header

The 3-bit header contains the fixed data 101b (except for Fast Write Operations).

Read/Write Bit

The header is followed by the read/write control bit (R/W). If the Read/Write bit is clear, a write operation is performed and the 16-bit data portion is copied into the addressed radio chip register.

Address

The address field is used to select one of the radio chip internal registers.

Data

The data field is used to transfer data to or from a radio chip register. The timing is modified for reads, to transfer control over the data signal from the CP3BT26 to the radio chip.

Table 15-1 shows the serial interface protocol format.

Table 15-1. Serial Interface Protocol Format

15			0
Data[15:0]			
24	22	21	20	16
Header[2:0]		R/W	Address[4:0]

Data is transferred on the serial interface with the most significant bit (MSB) first.

Write Operation

When the R/W bit is clear, the 16 bits of the data field are shifted out of the CP3BT26 on the falling edge of SCLK. Data is sampled by the radio chip on the rising edge of SCLK. When SLE is high, the 16-bit data are copied into the radio chip register on the next rising edge of SCLK. The data is loaded in the appropriate radio chip register depending on the state of the four address bits, Address[4:0]. Figure 15-3 shows the timing for the write operation.

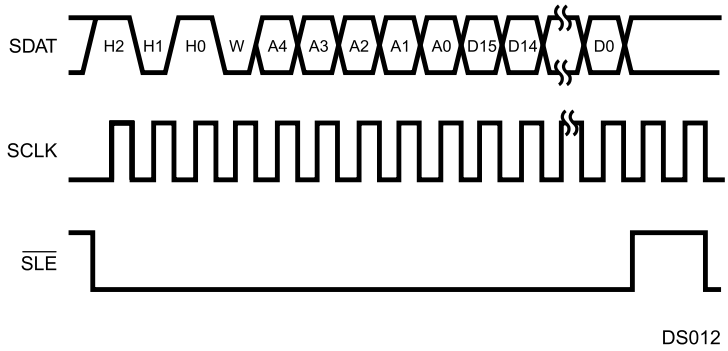

Figure 15-3. Serial Interface Write Timing

Read Operation

When the R/W bit is set, data is shifted out of the radio chip on the rising edge of SCLK. Data is sampled by the CP3BT26 on the falling edge of SCLK. On reception of the read command (R/W = 1), the radio chip takes control of the Figure 15-4. Serial Interface 16-bit Fast-Write Timing serial interface data line. The received 16-bit data is loaded by the CP3BT26 after the first falling edge of SCLK when $\overline{SLE}$ is high. When $\overline{SLE}$ is high, the radio chip releases the SDAT line again on the next rising edge of SCLK. The CP3BT26 takes control of the SDAT line again after the following rising edge of SCLK. Which radio chip register is read, depends on the state of the four address bits, Address[4:0]. The transfer is always 16 bits, without regard to the actual size of the register. Unimplemented bits contain undefined data. Figure 15-4 shows the timing for the read operation.

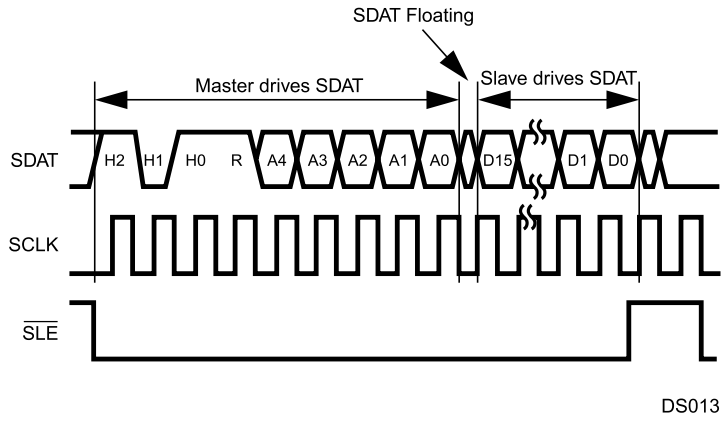

Figure 15-4. Serial Interface Read Timing

Copyright © 2007–2013, Texas Instruments Incorporated

Fast-Write Operation

An enhanced serial interface mode including fast write capability is enabled when the FW bit in the radio chip is set. This bit activates a mode with decreased addressing and control overhead, which allows fast loading of time-critical registers during normal operation. When the FW bit is set, the 3-bit header may have a value other than 101b, and it is used to address the write-only registers of the radio chip. Fast writes load the same physical register as the corresponding normal write operation.

For the power control and CMOS output registers of the RF chip, it is only necessary to transmit a total of 8 bits (3 address bits and 5 data bits), because the remaining eight bits are unused.

While the FW bit is set, normal Read/Write operations are still valid and may be used to access non-time-critical control registers. Figure 15-5 shows the timing for a 16-bit Fast-Write transaction, and Figure 15-6 shows the timing for an 8- bit Fast-Write transaction.

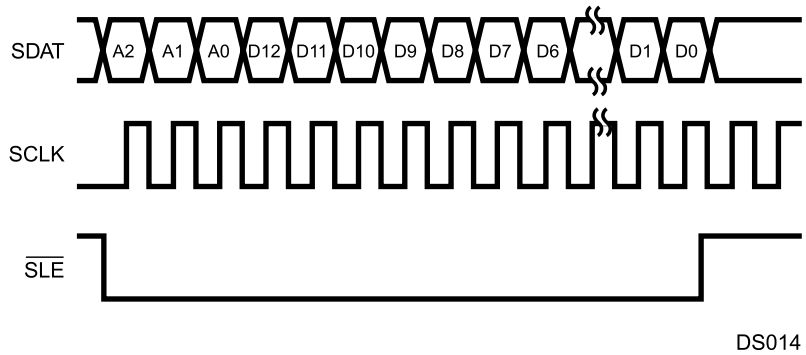

Figure 15-5. Serial Interface 16-bit Fast-Write Timing

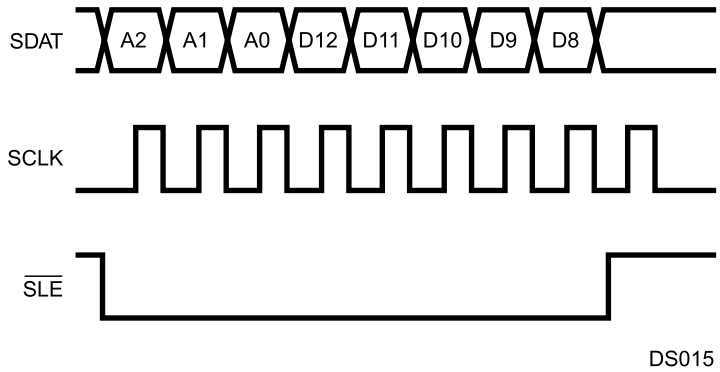

Figure 15-6. Serial Interface 8-bit Fast-Write Timing

32-Bit Write Operation

On the LMX5252, a 32-bit register is loaded by writing to the same register address twice. The first write loads the high word (bits 31:16), and the second write loads the low word (bits 15:0). The two writes must be separated by at least two clock cycles. For a 4-MHz clock, the minimum separation time is 500 ns.

The value read from a 32-bit register is a counter value, not the contents of the register. The counter value indicates which words have been written. If the high word has been written, the counter reads as 0000h. If both words have been written, the counter reads as 0001h. The value returned by reading a 32-bit register is independent of the contents of the register.

Figure 15-7 and Figure 15-8 show the timing for 32-bit register writing and reading.

The order for accessing the registers is from high to low: 17, 15, 14, 12, 11, 10, 9, 8, 7, 6, 5, 4, 2, and 1. These registers must be written during the initialization of the LMX5252.

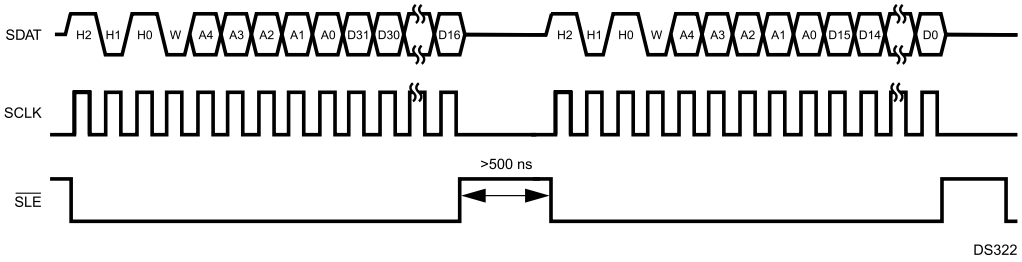

Figure 15-7. 32-Bit Write Timing

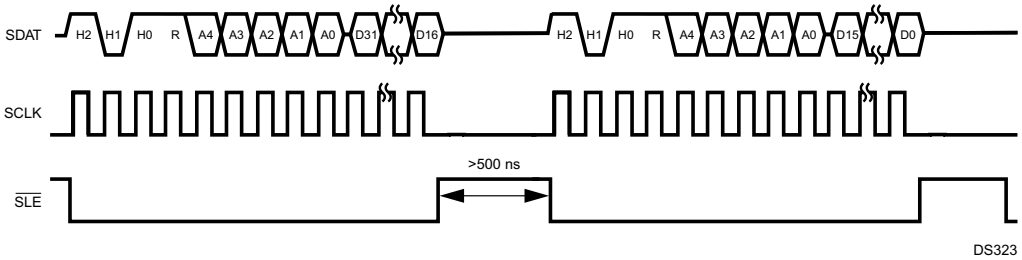

Figure 15-8. 32-Bit Read Timing

An example of a 32-bit write is shown in Table 15-2. In this example, the 32-bit value FFFF DC04h is written to register address 0Ah. In cycle 1, the high word (FFFFh) is written. In the first part of cycle 2, the CP3BT26 drives the header, R/ W bit, and register address for a read cycle. In the second part of cycle 2, the LMX5252 drives the counter value. The counter value is 0, which indicates one word has been written. In cycle 3, the low word (DC04h) is written. In the first part of cycle 4, the CP3BT26 drives the header, R/W bit, and register address for a read cycle. In the second part of cycle 4, the LMX5252 drives the counter value. The counter value is 1, which indicates two words have been written.

Table 15-2. Example of 32-Bit Write with Interleaved Reads

Cycle	Serial Data on SDAT	Description
1	101 0 01010 1111111111111111	Write cycle driven by CP3BT26. Data is FFFFh. Address is 0Ah.
2	101 1 01010	First part of read cycle driven by CP3BT26. Address is 0Ah.
	0000000000000000	Second part of read cycle driven by LMX5252. Counter value is 0.
3	101 0 01010 1101110000000100	Write cycle driven by CP3BT26. Data is DC04h. Address is 0Ah.
4	101 1 01010	First part of read cycle driven by CP3BT26. Address is 0Ah.
	0000000000000001	Second part of read cycle driven by LMX5252. Counter value is 1.

Copyright © 2007–2013, Texas Instruments Incorporated

15.3 LMX5251 POWER-UP SEQUENCE

To power-up a Bluetooth system based on the CP3BT26 and LMX5251 devices, the following sequence must be performed:

1. Apply VDD to the LMX5251.
2. Apply IOVCC and VCC to the CP3BT26.
3. Drive the RESET# pin of the LMX5251 high a minimum of 2 ms after the LMX5251 and CP3000 supply rails are powered up. This resets the LMX5251 and CP3BT26..
4. After internal Power-On Reset (POR) of the CP3BT26, the RFDATA pin is driven high. The RFCE, RFSYNC, and SDAT pins are in TRI-STATE mode. Internal pullup/ pull-down resistors on the CCB_CLOCK (SCLK), CCB_DATA (SDAT), CCB_LATCH ($\overline{SLE}$), and TX_RX_SYNC (RFSYNC) inputs of the LMX5251 pull these signals to states required during the power-up sequence.
5. When the RFDATA pin is driven high, the LMX5251 enables its oscillator. After an oscillator start-up delay, the LMX5251 drives a stable 12-MHz BBP_CLOCK (BBCLK) to the CP3BT26.
6. The Bluetooth baseband processor on the CP3BT26 now directly controls the RF interface pins and drives the logic levels required during the power-up phase. When the RFCE pin is driven high, the LMX5251 switches from “power-up” to “normal” mode and disables the internal pull-up/pull-down resistors on its RF interface inputs.
7. In “normal” mode, the oscillator of the LMX5251 is controlled by the RFCE signal. Driving RFCE high enables the oscillator, and the LMX5251 drives its BBP_CLOCK (BBCLK) output.

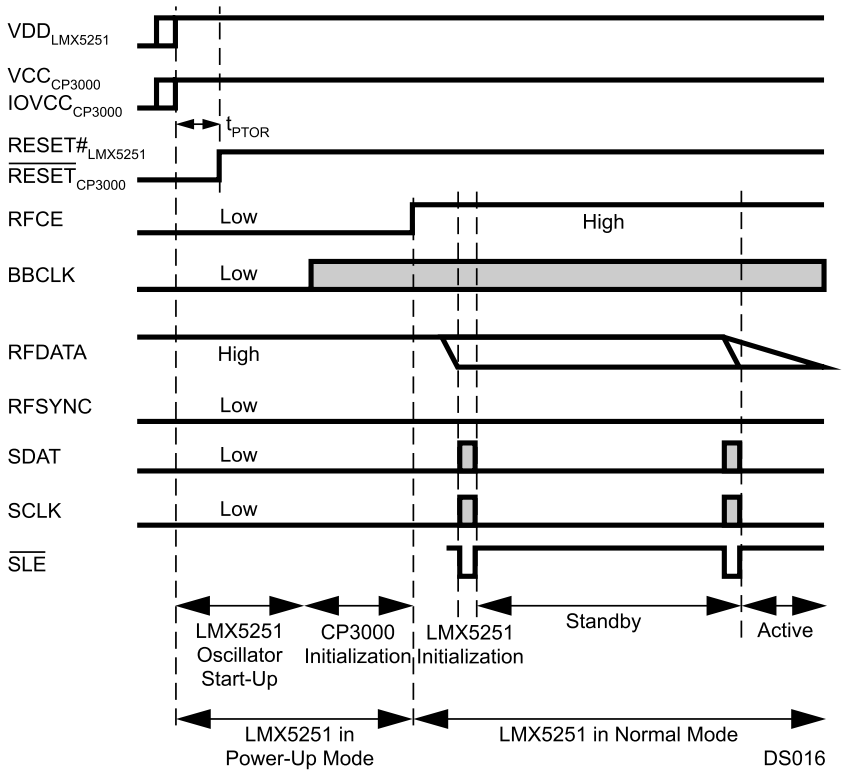

Figure 15-9. LMX5251 Power-Up Sequence

15.4 LMX5252 POWER-UP SEQUENCE

A Bluetooth system based on the CP3BT26 and LMX5252 devices has the following states:

- **Off--**When the LMX5252 enters Off mode, all configuration data is lost. In this state, the LMX5252 drives BPOR low.
- **Power-Up--**When the power supply is on and the LMX5252 RESET# input is high, the LMX5252 starts up its crystal oscillator and enters Power-Up mode. After the crystal oscillator is settled, the LMX5252 sends four clock cycles on BRCLK (BBCLK) before driving BPOR high.
- **RF Init--**The baseband controller on the CP3BT26 now drives RFCE high and takes control of the crystal oscillator. The baseband performs all the needed initialization (such as writing the registers in the LMX5252 and crystal oscillator trim).
- **Idle--**The baseband controller on the CP3BT26 drives RFDATA low when the initialization is ready. The LMX5252 is now ready to start transmitting, receiving, or enter Sleep mode.
- **Sleep--**The LMX5252 can be forced into Sleep mode at any time by driving RFCE low. All configuration settings are kept, only the Bluetooth low power clock is running (B3k2).
- **Wait XTL--**When RFCE goes high, the crystal oscillator becomes operational. When it is stable, the LMX5252 enters Idle mode and drives BRCLK (BBCLK).

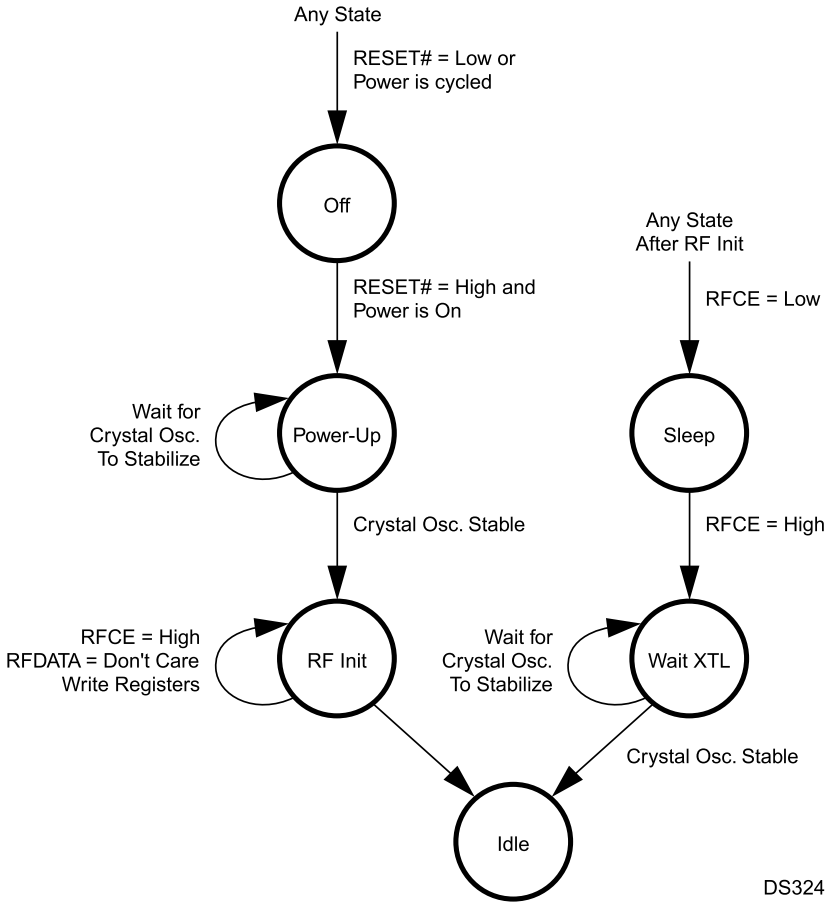

Figure 15-10. LMX5252 Power States

Copyright © 2007–2013, Texas Instruments Incorporated

The power-up sequence for a Bluetooth system based on the CP3BT26 and LMX5252 devices is shown in Figure 15-11.

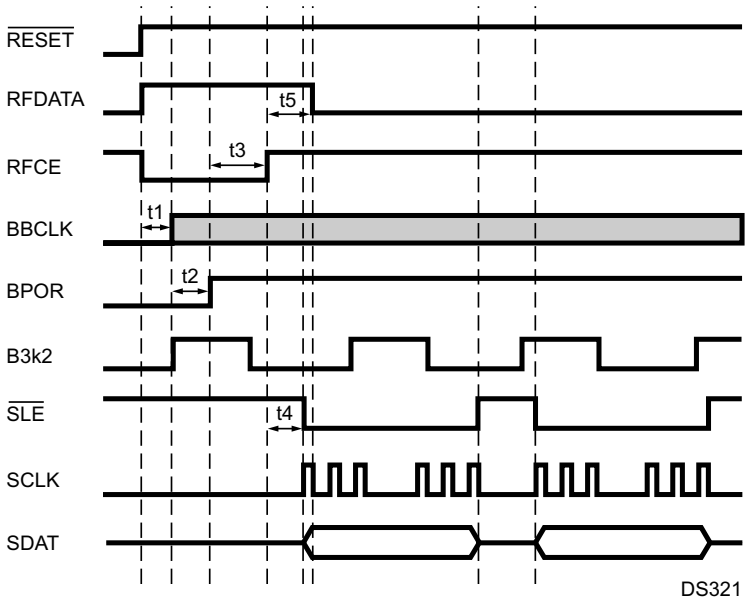

Figure 15-11. LMX5252 Power-Up Sequence

15.5 BLUETOOTH SLEEP MODE

The Bluetooth controller is capable of putting itself into a sleep mode for a specified number of Slow Clock cycles. In this mode, the controller clocks are stopped internally. The only circuitry which remains active are two counters (counter N and counter M) running at the Slow Clock rate. These counters determine the duration of the sleep mode.

The sequence of events when entering the LLC sleep mode is as follows:

1. The current Bluetooth counter contents are read by the CPU.
2. Software “estimates” the Bluetooth counter value after leaving the sleep mode.
3. The new Bluetooth counter value is written into the Bluetooth counter register.
4. The Bluetooth sequencer RAM is updated with the code required by the Bluetooth sequencer to enter/exit Sleep mode.
5. The Bluetooth sequencer RAM and the Bluetooth LLC registers are switched from the System Clock domain to the local 12 MHz Bluetooth clock domain. At this point, the Bluetooth sequencer RAM and Bluetooth LLC registers cannot be updated by the CPU, because the CPU no longer has access to the Bluetooth LLC.
6. Hardware Clock Control (HCC) is enabled, and the CP3BT26 enters a power-saving mode (Power Save or Idle mode). While in Power Save mode, the Slow Clock is used as the System Clock. While in Idle mode, the System Clock is turned off.
7. The Bluetooth sequencer checks if HCC is enabled. If HCC is enabled, the sequencer asserts HCC to the PMM. On the next rising edge of the low-frequency clock, the 1MHz clock and the 12 MHz clock are stopped locally within the Bluetooth LLC. At this point, the Bluetooth sequencer is stopped.
8. The M-counter starts counting. After M + 1 Slow Clock cycles, the HCC signal to the PMM is deasserted.
9. The PMM restarts the 12 MHz Main Clock (and the PLL, if required). The N-counter starts counting. After N + 1 Slow Clock cycles, the Bluetooth clocks (1 MHz and 12 MHz) are turned on again. The Bluetooth sequencer starts operating.
10. The Bluetooth sequencer waits for the completion of the sleep mode. When completed, the Bluetooth

sequencer asserts a wake-up signal to the MIWU (see Section 13).

11. The PMM switches the System Clock to the high-frequency clock and the CP3BT26 enters Active mode again. HCC is disabled. The Bluetooth sequencer RAM and Bluetooth LLC registers are switched back from the local 12 MHz Bluetooth clock to the System Clock. At this point, the Bluetooth sequencer RAM and Bluetooth LLC registers are once again accessible by the CPU. If enabled, an interrupt is issued to the CPU.

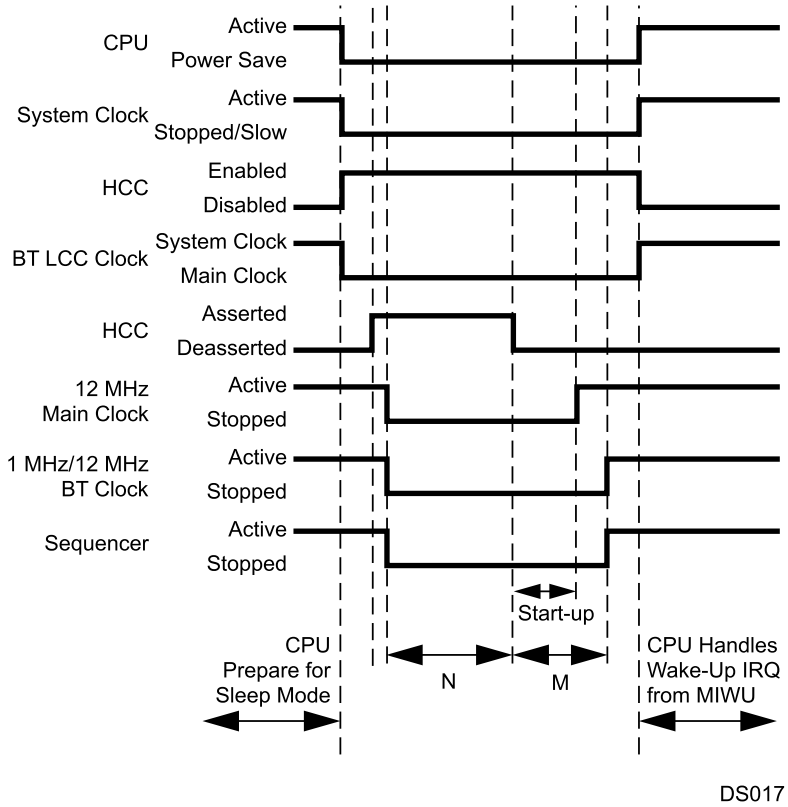

Figure 15-12. Bluetooth Sleep Mode Sequence

15.6 BLUETOOTH GLOBAL REGISTERS

Table 15-3 shows the memory map of the Bluetooth LLC global registers.

Table 15-3. Memory Map of Bluetooth Global Registers

Address (offset from 0E F180h)	Description
0000h–0048h	Global LLC Configuration
0049h–007Fh	Unused

Copyright © 2007–2013, Texas Instruments Incorporated

15.7 BLUETOOTH SEQUENCER RAM

The sequencer RAM is a 1K memory-mapped section of RAM that contains the sequencer program. This RAM can be read and written by the CPU in the same way as the Static RAM space and can also be read by the sequencer in the Bluetooth LLC. Arbitration between these devices is performed in hardware.

15.8 BLUETOOTH SHARED DATA RAM

The shared data RAM is a 4.5K memory-mapped section of RAM that contains the link control data, RF programming look-up table, and the link payload. This RAM can be read and written in the same way as the Static RAM space and can also be read by the sequencer in the Bluetooth LLC. Arbitration between these devices is performed in hardware. Table 15-4 shows the memory map of the Bluetooth LLC shared Data RAM.

Table 15-4. Memory Map of Bluetooth Shared RAM

Address (offset from 0E 8000h)	Description
0000h–01D9h	RF Programming Look-up Table
01DAh–01FFh	Unused
0200h–023Fh	Link Control 0
0240h–027Fh	Link Control 1
0280h–02BFh	Link Control 2
02C0h–02FFh	Link Control 3
0300h–033Fh	Link Control 4
0340h–037Fh	Link Control 5
0380h–03BFh	Link Control 6
03C0h–03FFh	Link Control 7
0400h–11FFh	Link Payload 0–6

Copyright © 2007–2013, Texas Instruments Incorporated

16 12-BIT ANALOG TO DIGITAL CONVERTER

The integrated 12-bit ADC provides the following features:

- 8-input analog multiplexer
- 8 single-ended channels or 4 differential channels
- External filtering capability
- 12-bit resolution with 11-bit accuracy
- Sign bit
- 15-microsecond conversion time
- Support for resistive touchscreen interface
- Internal or external start trigger
- Programmable start delay after start trigger
- Poll or interrupt on done

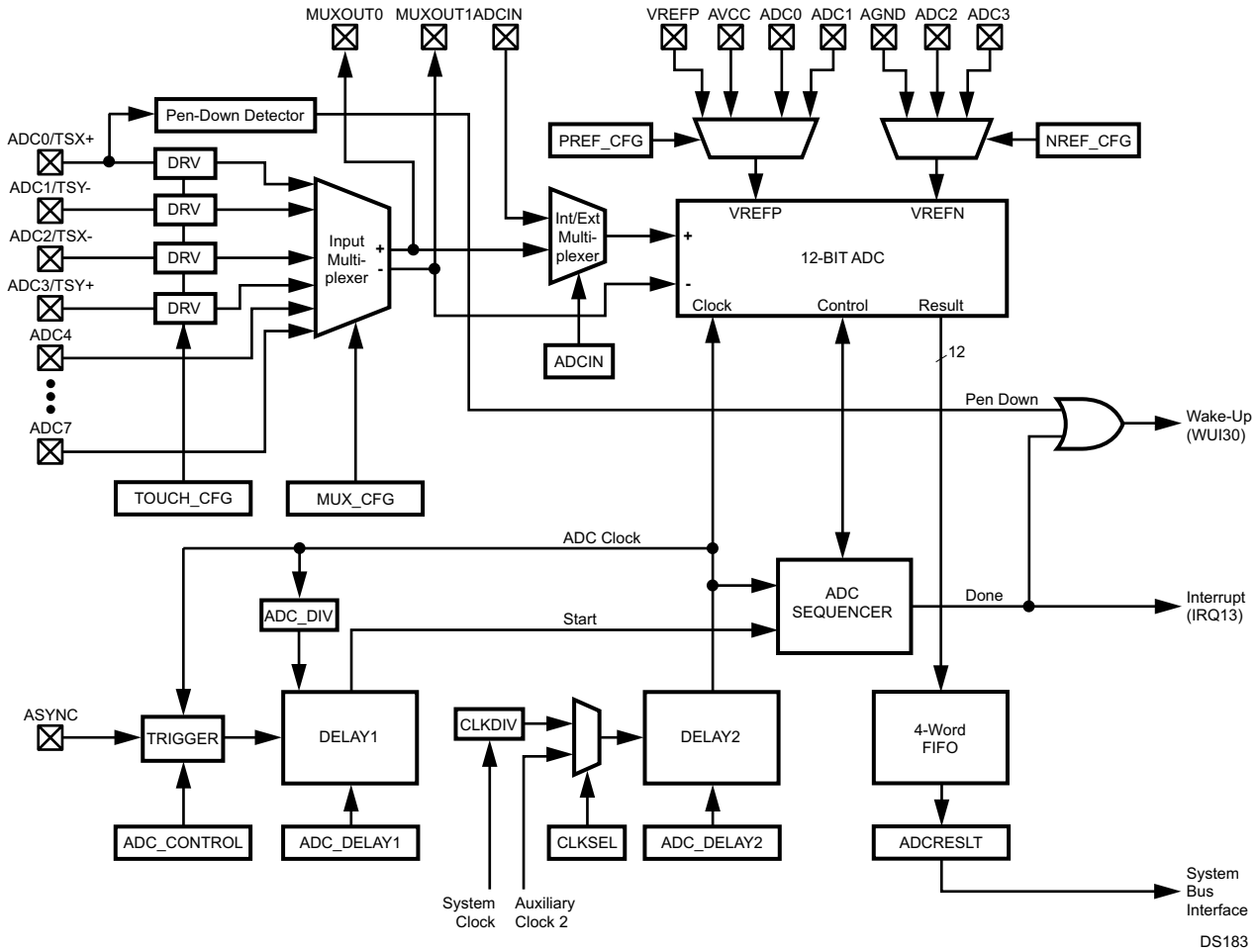

Figure 16-1. Analog to Digital Converter Block Diagram

16.1 FUNCTIONAL DESCRIPTION

The ADC module consists of a 12-bit ADC converter and associated state machine, together with analog multiplexers to set up signal paths for sampling and voltage references, logic to control triggering of the converter, and a bus interface.

Copyright © 2007–2013, Texas Instruments Incorporated

16.1.1 Data Path

Up to 8 GPIO pins may be configured as 8 singled-ended analog inputs or 4 differential pairs. Analog/digital data passes through four main blocks in the ADC module between the input pins and the CPU bus:

- **Input Multiplexer**—an analog multiplexer that selects among the input channels.
- **Internal/External Multiplexer**—an analog multiplexer that selects between the output of the Input Multiplexer and the ADCIN external analog input.
- **12-Bit ADC**—receives the output of the Internal/External Multiplexer and performs the analog to digital conversion.
- **ADCRESLT** Register—makes conversion results from the 12-Bit ADC available to the on-chip bus. The ADCRESLT register includes the software-visible end of a 4-word FIFO used to queue conversion results.

The configuration of the analog signal paths is controlled by fields in the ADCGCR register. The Input Multiplexer is controlled by the MUX_CFG field. The Internal/External Multiplexer is controlled by the ADCIN bit. The analog multiplexers for selecting the voltage references used by the ADC are controlled by the PREF_CFG and NREF_CFG fields. The low-ohmic drivers used for interface to resistive touchscreens are controlled by the TOUCH_CFG field.

The output of the Input Multiplexer is available externally as the MUXOUT0 and MUXOUT1 signals. In single-ended mode, only MUXOUT0 is used. In differential mode, MUXOUT0 is the positive side and MUXOUT1 is the negative side. The MUXOUT0 and MUXOUT1 outputs and the ADCIN external analog input are provided so that external signal conditioning circuits (such as filters) may be applied to the analog signals before conversion. The MUXOUT0, MUXOUT1, and ADCIN signals are alternate functions of GPIO pins used by the Input Multiplexer, so the number of available analog input channels is reduced when these signals are used.

16.1.2 Operation

The TRIGGER block may be configured to initiate a conversion from either of these sources:

- **External ASYNC Input**—an edge on the ASYNC input triggers a conversion. This input may be configured to be sensitive to rising or falling edges, as controlled by the POL bit in the ADCCNTRL register.
- ADCSTART Register--writing any value to the ADC- START register triggers a conversion.

  The TRIGGER block incorporates a glitch filter to suppress transient spikes on the ASYNC input. The TRIGGER block will recognize ASYNC pulse widths of 10 ns or greater. Once a trigger event has been recognized, no further triggering is recognized until the conversion is completed.

  When the ASYNC input is selected as the trigger source, it may be configured for automatic or non-automatic mode, as controlled by the AUTO bit in the ADCCNTRL register:
- **Automatic Mode**—a conversion is triggered by any qualified edge on the ASYNC input (unless a conversion is already in progress).—a conversion is triggered by any qualified edge on the ASYNC input (unless a conversion is already in progress).
- **Non-Automatic Mode**—before a conversion may be triggered from the ASYNC input, software must “prime” the TRIGGER block by writing the ADCSTART register. Once the TRIGGER block is primed, a conversion is triggered by any qualified edge on the ASYNC input. After the conversion is completed, no additional trigger events will be recognized until software once again primes the TRIGGER block by writing the ADCSTART register.

  Once a trigger event is recognized, the DELAY1 block waits for a programmable delay specified in the ADC_DELAY1 field of the ADCSCDLY register. Then, it asserts the Start signal to the ADC SEQUENCER block.

  When the Start signal is received, the ADC SEQUENCER block initiates the conversion in the 12-Bit ADC. After the conversion is complete, the result is loaded into the FIFO, and the Done signal is asserted.

The ADCRESLT register includes the software-visible end of a 4-word FIFO, which allows up to 4 conversion results to be queued for reading. Reading the ADCRESLT register unloads the FIFO. If the FIFO overflows, a bit is set in the ADCRESLT register, and the most recent conversion data is lost.

The Done signal is visible to software as the ADC_DONE bit in the ADCRESLT register. The Done signal is also an input to the interrupt controller (IRQ13). The interrupt will be asserted whenever the FIFO is not empty (but will deassert for one system clock after the ADCRESLT register is read). Total conversion time is around 15 microseconds.

The Done signal is also an input to the Multi-Input Wake-Up unit (WUI30). The MIWU input is asserted whenever the FIFO is not empty (but will deassert for one system clock after the ADCRESLT register is read). The wake-up output is provided so that the ADC module can bring the system out of a power-saving mode when a conversion operation is completed. It asserts earlier than the interrupt output. In the pen-down detection mode of the ADC, the wake-up output is ORed with the ADC pen-down detector output, to wake up on a pen-down event.

16.1.3 ADC Clock Generation

The DELAY2 block generates ADC Clock, which is the clock used internally by the ADC module. ADC Clock is derived from either:

- **System Clock**—a programmable divider is available to generate the 12 MHz clock required by the ADC from the System Clock.
- **Auxiliary Clock 2**—may be used to perform conversions when the System Clock is slowed down or suspended in low-power modes.

The DELAY2 block receives the clock source selected by the CLKSEL bit of the ADCACR register and adds a number of asynchronous incremental delay units specified in the ADC_DELAY2 field of the ADCSCDLY register. This delayed clock (ADC Clock) then drives the TRIGGER, 12-BIT ADC, and ADC SEQUENCER blocks. ADC Clock also drives the ADC_DIV clock divider, which generates the clock which drives the DELAY1 block.

Because the ADCRESLT FIFO is driven by System Clock (not ADC Clock), a conversion result will not propagate to the output of the FIFO when the System Clock is suspended.

16.1.4 ADC Voltage References

The 12-BIT ADC block has positive and negative voltage reference inputs, VREFP and VREFN. In single-ended mode, only VREFP is used. An analog multiplexer allows selecting an external VREFP pin, the analog supply voltage AVCC, or the analog inputs ADC0 or ADC1 as the positive voltage reference, as controlled by the PREF_CFG field of the ADCGCR register. Another analog multiplexer allows selecting the analog ground AGND or the analog inputs ADC2 or ADC3 as the negative voltage reference, as controlled by the NREF_CFG field of the ADCGCR register.

16.1.5 Pen-Down Detector

A pen-down detector is provided on the ADC0 (TSX+) input of the ADC. It consists of a Schmitt-trigger receiver, with a minimum Vil of 0.7V. When pen-down detect mode is enabled by loading 101b into the TOUCH_CFG field of the AD- CGCR register, the output of this detector is visible to software in the PEN_DOWN bit of the ADCRESLT register, and this output is ORed with the Done signal to become the wake-up input (WUI30) to the Multi-Input Wake-Up unit.

 Copyright © 2007–2013, Texas Instruments Incorporated

16.2 TOUCHSCREEN INTERFACE

The ADC provides an interface for 4-wire resistive touch- screens with the resolution necessary for applications such as signature analysis. A typical touchscreen configuration is shown in Figure 16-2.

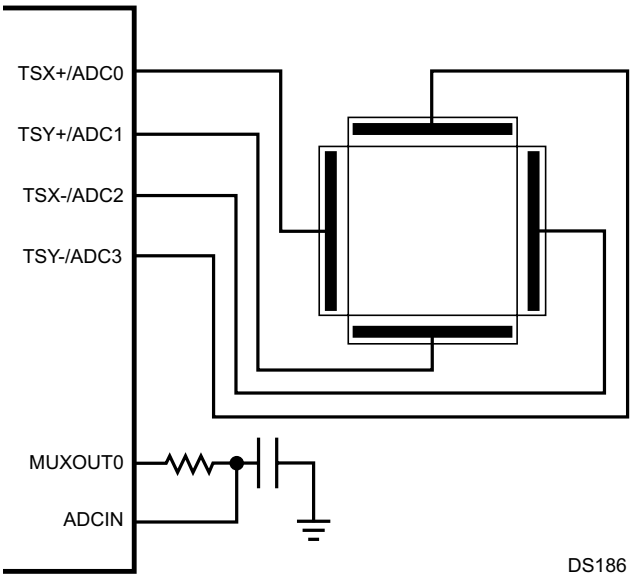

Figure 16-2. Touchscreen Interface

A touchscreen consists of two resistive plates normally separated from each other. The TSX+ and TSX- signals are connected to opposite ends of the X plate, while the TSY+ and TSY- signals are connected to the Y plate. If the pen is down, the plates will be shorted together at the point of pen 6 6 DS187 contact. The location of the pen is sensed by driving one end of a plate to VCC, driving the opposite end to ground, and sensing the voltage at the point of pen contact using the other plate. This is done twice, once for each coordinate.

An external RC low-pass filter is used to remove noise coupled to the touchscreen signals from the display drivers.

16.2.1 Touchscreen Driver Configuration

An equivalent circuit for the touchscreen interface is shown in Figure 16-3.

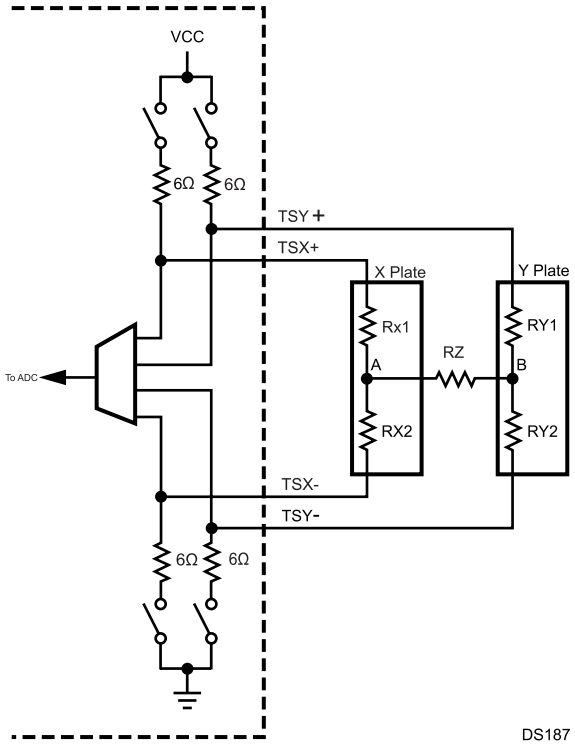

Figure 16-3. Touchscreen Driver Equivalent Circuit

Low-ohmic drivers are provided to pull the TSX+ and TSY+ signals to VCC and the TSX- and TSY- signals to GND. The on-resistance of these drivers is specified to be 6 ohms.

Two measurements are used to produce one (x,y) position coordinate pair. To measure the x-coordinate, the TSX+ signal is pulled to VCC, the TSX- signal is pulled to GND, and the TSY+ and TSY- signals are undriven. A voltage divider is formed across the X plate, with the center tap of the divider being the point of pen contact, represented in Figure 16-3 by node A. With TSY+ and TSY- undriven, the voltage at node A can be measured by sampling either of the TSY+ or TSY- signals. This voltage will be proportional to the position of the pen contact on the X plate.

The position of the pen contact on the Y plate is measured similarly, by driving the TSY+ signal to VCC, the TSY- signal to GND, and leaving the TSX+ and TSX- signals undriven. The voltage at node B can be sampled from either the TSX+ or TSX- signals. The TOUCH_CFG field of the ADCGCR register specifies the configuration of the drivers, with 010b used to sample node A and 001b used to sample node B.

Typically, two consecutive measurements are made of each coordinate so that any interference coupled from the LCD column drivers is averaged out.

The plate-to-plate resistance is shown in Figure 16-3 as RZ. This measurement is used as an indication of the force of pen contact. When 100b is loaded into the TOUCH_CFG field, the TSY+ signal is pulled to VCC and the TSX-signal is pulled to GND, to support measuring RZ.

Copyright © 2007–2013, Texas Instruments Incorporated

16.2.2 Measuring Pen Force

Figure 16-4 shows equivalent circuits for the driver modes used to measure the X, Y, and Z coordinates, in which Z represents pen force. In this discussion, the ohmic resistance of the drivers is neglected (see Section 16.2.3), and series resistance between the node of interest and the ADC is ignored because it has no significant effect.

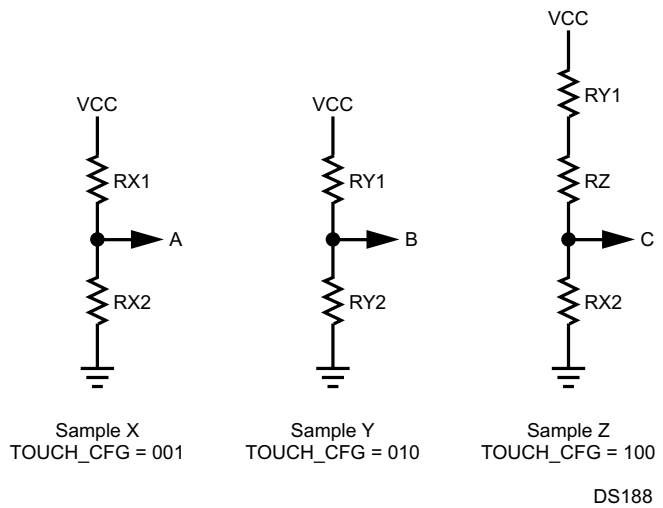

Figure 16-4. Touchscreen Driver Modes

In the following examples, the ADC is assumed to operate in single-ended mode to produce conversion values between 0 and 2047. However, the same principles could be extended to differential mode to recover the full range of the ADC.

In Sample X mode, the X plate is driven between VCC and ground, so that a value measured at node A on the TSY+ or TSY- inputs is the center tap of a resistor-divider network. The end-to-end resistance RXP of the X plate is:

$$RXP = RX1 + RX2 \quad (1)$$

The value measured at node A is proportional to the ratio between the resistance to ground and the resistance of the X plate:

$$A / 2047 = RX2 / RXP \quad (2)$$

Solving for RX2, the resistance is:

$$RX2 = RXP \times (A / 2047) \quad (3)$$

Similarly, in Sample Y mode the value measured at node B on the TSX+ or TSX- inputs is proportional to the ratio between the resistance to ground and the resistance RYP of the Y plate:

$$B/2047 = RY2/RYP \quad (4)$$

Because end-to-end resistance RYP of the Y plate is:

$$RYP = RY1 + RY2 \quad (5)$$

The previous equation can be rewritten as:

$$B/2047 = (RYP - RY1) / RYP \quad (6)$$

Solving for RY1, the resistance is:

$$RY1 = RYP \times (1-(B/2047)) \quad (7)$$

Now that the resistance values RX2 and RY1 are known, it is possible to calculate the value of the plate-to-plate contact resistance, RZ, given the value measured at node C on the TSX+ input in Sample Z mode. Node C is a tap in a resistor-divider network composed of three resistors, such that:

$$C/2047 = RX2 / (RY1 + RZ + RX2) \quad (8)$$

Solving for RZ, the resistance is:

RZ = (RX2x((2047-C)/C)) - RY1 (9)

The resistance RZ is proportional to the force of pen contact.

16.2.3 Compensation for Driver Resistance

Plate resistances between opposite electrodes range from 100 ohms to 1k ohm. Because of the 6-ohm driver resistance, some significant voltage drop will be experienced between, for example, TSX- and AGND. A 200-ohm plate will drop:

(6/(200+6+6)) x (AVCC-AGND) (10)

With a 2.5V supply, this is 70 mV. A 12-bit ADC has 4096 possible values, so each value covers a range of 610 µV at 2.5V. A voltage drop of 70 mV across each of the low-ohmic drivers reduces the number of available ADC values by:

(70 mV x 2) / 610 uV = 230 (11)

This effective loss of resolution can be handled in a number of ways.

1. The voltages on, for example, TSY+ and TSY- can be sampled before sampling TSX+ and TSX-. Then, scaling can be applied in software to convert the samples to the full (4096-bit) range. This technique will not recover any resolution, however it is worthy of some consideration because touchscreen data is typically passed to two applications:
   Signature Analysis — only the raw data is required. No absolute positioning is necessary.
   Screen Overlay—for example, for cursor positioning. In this application, a scaling or calibration is performed to correctly overlay the touchscreen coordinates onto the display. Because of this calibration, it is not even necessary to sample TSY+ and TSY-.
2. The ADC has a positive voltage reference input which can be internally connected to the TSY+ terminal. This means that the number of available ADC values is increased to:4096 - (70 mV / 610 uV) = 3981

   Software scaling could be applied to this value if required (as with Technique 1 above), but no additional resolution is achieved.

   By extension, the ADC negative voltage reference can be internally connected to the TSY- terminal, to recover the full 4096 values.

The Global Configuration Register (ADCGCR) provides the flexibility to implement any of these techniques.

16.3 ADC OPERATION IN POWER-SAVING MODES

To reduce the level of switching noise in the environment of the ADC, it is possible to operate the CP3BT26 in low-power modes, in which the System Clock is slowed or switched off. Under these conditions, Auxiliary Clock 2 can be selected as the clock source for the ADC module, however conversion results cannot be read by the system while the System Clock is suspended. The expected operation in power-saving modes is therefore:

1. ADC is configured and a conversion is primed or triggered.
2. A power-saving mode is entered.
3. ADC conversion completes and a wake-up signal is asserted to the MIWU unit.
4. Device wakes up and processes the conversion result.

   To conserve power, the ADC should be disabled before entering a low-power mode if its function is not required.

 Copyright © 2007–2013, Texas Instruments Incorporated

16.4 FREEZE

The ADC module provides support for an In-System Emulator by means of a special FREEZE input. When FREEZE is asserted the module will exhibit the following specific behavior:

- The automatic clear-on-read function of the result register (ADCRESLT) is disabled.
- The FIFO is updated as usual, and an interrupt for a completed conversion can be asserted.

16.5 ADC REGISTER SET

Table 16-1 lists the ADC registers.

Table 16-1. ADC Registers

Name	Address	Description
ADCGCR	FF F3C0h	ADC Global Configuration Register
ADCACR	FF F3C2h	ADC Auxiliary Configuration Register
ADCCNTRL	FF F3C4h	ADC Conversion Control Register
ADCSTART	FF F3C6h	ADC Start Conversion Register
ADCSCDLY	FF F3C8h	ADC Start Conversion Delay Register
ADCRESLT	FF F3CAh	ADC Result Register

16.5.1 ADC Global Configuration Register (ADCGCR)

The ADCGCR register controls the basic operation of the interface. The CPU bus master has read/write access to the ADCGCR register. After reset this register is set to 0000h.

8	7	6	5	4	3	2	1	0
TOUCH_CFG			MUX_CFG			DIFF	ADCIN	CLKEN

15	14	13	12	11	10	9
MUXOUTEN	INTEN	Res.	NREF_CFG		PREF_CFG	

CLKEN — The Clock Enable bit controls whether the ADC module is running. When this bit is clear, all ADC clocks are disabled, the ADC analog circuits are in a low-power state, and ADC registers (other than the ADCGCR and AGCACR registers) are not writeable. Clearing this bit reinitializes the ADC state machine and cancels any pending trigger event. When this bit is set, the ADC clocks are enabled and the ADC analog circuits are powered up. The converter is operational within 0.25 µs of being enabled.
0 – ADC disabled.
1 – ADC enabled.

ADCIN — The ADCIN bit selects the source of the ADC input. When the bit is clear, the source is the 8-channel Input Multiplexer. When the bit is set, the source is the ADCIN pin.
0 – ADC input is from 8-channel multiplexer.
1 – ADC input is from ADCIN pin.

DIFF — The Differential Operation Mode bit and the MUX_CFG field configure the analog circuits of the ADC module. When this bit is clear, the ADC module operates in single-ended mode. When this bit is set, the ADC operates in differential mode. SeeTable 16-2.
0 – Single-ended mode.
1 – Differential mode.

MUX_CFG — The Multiplexer Configuration field and the DIFF bit configure the analog circuits of the ADC module, as shown in Table 16-2

Table 16-2. MUX CFG Operation

MUX_CFG	Channel Selected, (DIFF = 0)	Channel Selected (DIFF = 1)	
		+	-
000	0	0	0
001	1	1	1
010	2	2	2
011	3	3	3
100	4	4	4
101	5	5	5
110	6	6	6
111	7	7	7

For best noise immunity in touchscreen applications, channel 2 should be used for sampling the X plate voltage, and channel 1 should be used for sampling the Y plate voltage.

TOUCH_CFG — The Touchscreen Configuration field controls the configuration of the low-ohmic drivers for the TSX+, TSX-, TSY+, and TSY- signals, as shown in Table 16-3. When TOUCH_CFG is 101b, the pen-down detector is enabled. The output of the pen-down detector is visible to software in the PEN_DOWN bit of the ADSRESLT register, and it is ORed with the Done signal to generate the wake-up signal WUI30 passed to the MIWU unit.

Copyright © 2007–2013, Texas Instruments Incorporated

Table 16-3. TOUCH_CFG Modes

TOUCH_CFG Modes					
TOUCH_CFG	**ADC0/TSX+**	**ADC1/TSY+**	**ADC2/TSX-**	**ADC3/TSY-**	**Mode**
000	Inactive	Inactive	Inactive	Inactive	None
001	Inactive	Driven High	Inactive	Driven Low	Sample Y
010	Driven High	Inactive	Driven Low	Inactive	Sample X
011	Driven High	Inactive	Inactive	Driven Low	Sample Z (1), Pre-Pen Down
100	Inactive	Driven High	Driven Low	Inactive	Sample Z (2)
101	Weakly Pulled High	Inactive	Inactive	Driven Low	Pen-Down Detect
11X	Inactive	Inactive	Inactive	inactive	Reserved

PREF_CFG — The Positive Voltage Reference Configuration field specifies the source of the ADC positive voltage reference, according to the following table:

PREF_CFG	PREF Source
00	Internal (AVCC)
01	VREFP
10	ADC0
11	ADC1

NREF_CFG — The Negative Voltage Reference Configuration field specifies the source of the ADC negative voltage reference, according to the following table:

NREF_CFG	NREF source
00	Internal (AGND)
01	Reserved
10	ADC2
11	ADC3

MUXOUTEN — The MUXOUT Enable bit controls whether the output of the Input Multiplexer is available externally. In single-ended mode, the MUXOUT0 pin is active and the MUXOUT1 pin is disabled (TRI-STATE). In differential mode, both MUXOUT0 and MUXOUT1 are active.
0 – MUXOUT0 and MUXOUT1 disabled.
1 – MUXOUT0 and MUXOUT1 enabled.

INTEN — The Interrupt Enable bit controls whether the ADC interrupt (IRQ13) is enabled. When enabled, the interrupt request is asserted when valid data is available in the ADCRESLT register. This bit has no effect on the wake_up signal to the MIWU unit (WUI30).
0 – IRQ13 disabled.
1 – IRQ13 enabled.

16.5.2 ADC Auxiliary Configuration Register (ADCACR)

The ADCACR register is used to control the clock configuration and report the status of the ADC module. The CPU bus master has read/write access to the ADCACR register. After reset, this register is clear.

15	14	13	12 3	2 1	0
CNVT	TRG	PRM	Reserved	CLKDIV	CLKSEL

CLKSEL The Clock Select bit selects the clock source used by the DELAY2 block to generate the ADC clock.
0 – ADC clock derived from System Clock.
1 – ADC clock derived from Auxiliary Clock 2

CLKDIV The Clock Divisor field specifies the divisor applied to System Clock to generate the 12 MHz clock required by the ADC module. Only the System Clock is affected by this divisor. The divisor is not used when Auxiliary Clock 2 is selected as the clock source.

CLKDIV	Clock Divisor
00	1
01	2
10	4
11	Reserved

PRM The ADC Primed bit is a read-only bit that indicates the ADC has been primed to perform a conversion by writing to the ADCSTART register. The bit is cleared after the conversion is completed.
0 – ADC has not been primed.
1 – ADC has been primed.

TRG The ADC Triggered bit is a read-only bit that indicates the ADC has been triggered. The bit is set during any pre-conversion delay. The bit is cleared after the conversion is completed.
0 – ADC has not been triggered.
1 – ADC has been triggered.

CNVT The ADC Conversion bit is a read-only bit that indicates the ADC has been primed to perform a conversion, a valid internal or external trigger event has occurred, any pre-conversion delay has expired, and the ADC conversion is in progress. The bit is cleared after the conversion is completed.
0 – ADC is not performing a conversion.
1 – ADC conversion is in progress.

16.5.3 ADC Conversion Control Register (ADCCNTRL)

The ADCCNTRL register specifies the trigger conditions for an ADC conversion.

15 3	2	1	0
Reserved	AUTO	EXT	POL

POL The ASYNC Polarity bit specifies the polarity of edges which trigger ADC conversions.
0 – ASYNC input is sensitive to rising edges.
1 – ASYNC input is sensitive to falling edges.

EXT The External Trigger bit selects whether conversions are triggered by writing the ADCSTART register or activity on the ASYNC input.
0 – ADC conversions triggered by writing to the ADCSTART register.
1 – ADC conversions triggered by qualified edges on ASYNC input.

AUTO The Automatic bit controls whether automatic mode is enabled, in which any qualified edge on the ASYNC input is recognized as a trigger event. When automatic mode is disabled, the ADC module must be “primed” before a qualified edge on the ASYNC input can trigger a conversion. To prime the ADC module, software must write the ADCSTART register with any value before an edge on the ASYNC input is recognized as a trigger event. After the conversion is completed, the ASYNC input will be ignored until software again writes the ADCSTART register. The AUTO bit is ignored when the EXT bit is 0.
0 – Automatic mode disabled.
1 – Automatic mode enabled.

Copyright © 2007–2013, Texas Instruments Incorporated

16.5.4 ADC Start Conversion Register (ADCSTART)

The ADCSTART register is a write-only register used by software to initiate an ADC conversion. Writing any value to this register will cause the ADC to initiate a conversion or prime the ADC to initiate a conversion, as controlled by the ADCCNTRL register.

16.5.5 ADC Start Conversion Delay Register (ADCSCDLY)

The ADCSCDLY register controls critical timing parameters for the operation of the ADC module.

15 14	13 5	4 0
ADC_DIV	ADC_DELAY1	ADC_DELAY2

ADC_DELAY2	The ADC Delay 2 field specifies the delay between the ADC module clock source (either System Clock after a programmable divider or Auxiliary Clock 2) and the ADC clock. The range of effective values for this field is 0 to 20. Values above 20 produce the same delay as 20, which is about 42 ns.
ADC_DELAY1	The ADC Delay 1 field specifies the number of clock periods by which the trigger event will be delayed before initiating a conversion. The timebase for this delay is the ADC clock (12 MHz) divided by the ADC_DIV divisor. The ADC_DELAY1 field has 9 bits, which corresponds to a maximum delay of 511 clock periods.
ADC_DIV	The ADC Clock Divisor field specifies the divisor applied to the ADC clock (12 MHz) to generate the clock used to drive the DELAY1 block. A field value of n results in a division ratio of n+1. With a module clock of 12 MHz, the maximum delay which can be provided by ADC_DIV and ADC_DELAY settings is:

$$(1/12\ \text{MHz}) \times 4 \times 511 = 170\ \text{us} \quad (12)$$

16.5.6 ADC Result Register (ADCRESLT)

The ADCRESLT register includes the software-visible end of a 4-word FIFO. Conversion results are loaded into the FIFO from the 12-bit ADC and unloaded when software reads the ADCRESLT register. The ADCRESLT register is read-only. With the exception of the PEN_DOWN bit, the fields in this register are cleared when the register is read.

11			0
ADC_RESULT			
15	14	13	12
ADC_DONE	ADC_OFLW	PEN_DOWN	SIGN

ADC_RESULT The ADC Result field holds a 12-bit value for the conversion result. If the ADC_DONE bit is clear, there is no valid result in this field, and the field will have a value of 0. The ADC_RESULT field and the SIGN bit together form the software-visible end of the ADC FIFO.

SIGN The Sign bit indicates whether the - input has a voltage greater than the + input (differential mode only). For example if AD- CGCR.MUX_CFG is 000b, ADC0 is the + input and ADC1 is the - input. If the voltage on ADC0 is greater than the voltage on ADC1, the SIGN bit will be 0; if the voltage on ADC0 is less than the voltage on ADC1, the SIGN bit will be 1. In single-ended mode, this bit always reads as 0.
0 – In differential mode, + input has a voltage greater than the - input. In single-ended mode, this bit is always 0.
1 – In differential mode, - input has a voltage greater than the + input.

PEN_DOWN The Pen-Down bit indicates whether a pen- down condition is being sensed. To enable pen-down detection, the TOUCH_CFG field of the ADCGCR register must be loaded with 101b. The sense of the PEN_DOWN bit is inverted, so when pen-down detection is enabled and a pen-down condition is sensed, the PEN_DOWN bit is clear. This bit is not carried through the FIFO, so its value represents the current status of the pen-down detector. When pen-down detection is enabled, the un-inverted signal from the pen-down detector is ORed with the Done signal to generate the wake-up signal (WUI30) passed to the MIWU unit. If pen-down detection is not enabled, this bit reads as 0.
0 – Pen-down condition is sensed, or pen- down detection is disabled.
1 – No pen-down condition is sensed.

ADC_OFLW The ADC FIFO Overflow bit indicates whether the 4-word FIFO behind the ADCRESLT register has overflowed. When this occurs, the most recent conversion result is lost. This bit is cleared when the ADCRESLT register is read.
0 – FIFO overflow has not occurred.
1 – FIFO overflow has occurred.

ADC_DONE The ADC Done bit indicates when an ADC conversion has completed. When this bit is set, the data in the ADC_RESULT field is valid. When this bit is clear, there is no valid data in the ADC_RESULT field. The Done bit is cleared when the ADCRESLT register is read, but if there are queued conversion results in the FIFO, the Done bit will become set again after one System Clock period.
0 – No ADC conversion has completed since the ADCRESLT register was last read.
1 – An ADC conversion has completed since the ADCRESLT register was last read.

 Copyright © 2007–2013, Texas Instruments Incorporated

17 RANDOM NUMBER GENERATOR (RNG)

The RNG unit is a hardware "true random" number generator. When enabled, this unit provides up to 800 random bits per second. The bits are available for reading from a 16-bit register.

The RNG unit includes two oscillators which operate independently of the System Clock:

- **Fast Oscillator**—a 24 MHz oscillator which drives a linear feedback shift register (LFSR).
- **Slow Oscillator**—an unstable oscillator which drives a flip-flop for sampling the pseudorandom bitstream from the LFSR. This oscillator operates at approximately 115 kHz, but it does not have a fixed frequency.

By sampling the pseudorandom bitstream at random intervals, a random bitstream is synthesized. This bitstream is clocked into a 16-bit shift register. A programmable clock divider generates the clock signal for the shift register from the System Clock.

When a new 16-bit word of random data is available, it is loaded into the RNGD register. If enabled, an interrupt request (IRQ3) is asserted when the word is available for reading. When software reads the RNGD register, the register is cleared and the interrupt request is deasserted.

The RNGCST register provides control and status bits for the RNG module:

- **RNG Enable**—enables or disables the RNG oscillators.
- **Interrupt Mask**—enables or disables the interrupt when a new word of random data becomes available.
- **Data Valid**—indicates whether a new word is available.

17.1 FREEZE

The RNG module provides support for an In-System Emulator by means of a special FREEZE input. When FREEZE is asserted, the automatic clear-on-read function of the RNDGD register is disabled.

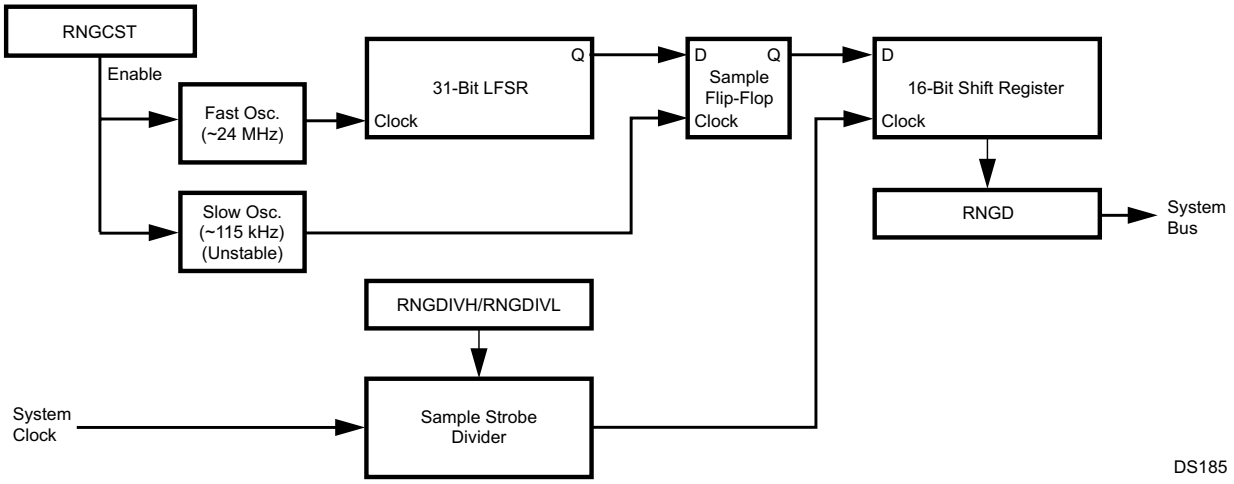

Figure 17-1. RNG Module Block Diagram

17.2 RANDOM NUMBER GENERATOR REGISTER SET

Table 17-1 lists the RNG registers.

Table 17-1. RNG Registers

Name	Address	Description
RNGCST	FF F280h	RNG Control and Status Register
RNGD	FF F282h	RNG Data Register
RNGDIVH	FF F284h	RNG Divisor Register High
RNGDIVL	FF F286h	RNG Divisor Register Low

17.2.1 RNG Control and Status Register (RNGCST)

The RNGCST register provides control and status bits for the RNG module. This register is cleared at reset.

15 – 6	5	4 – 2	1	0
Reserved	IMSK	Reserved	DVALID	RNGE

RNGE	The Random Number Generator Enable bit enables the operation of the RNG. When this bit is clear, the RNG module is disabled, and both RNG oscillators are suspended. 0 – RNG module disabled. 1 – RNG module enabled.
DVALID	The Data Valid bit indicates whether valid (random) data is available in the RNGD register. This bit is cleared when the RNGD register is read. 0 – RNGD register holds invalid data. 1 – RNGD register holds valid data.
IMASK	The Interrupt Mask bit controls whether an interrupt request (IRQ3) will be asserted when valid (random) data is available in the RNGD register. 0 – RNG interrupt disabled. 1 – RNG interrupt enabled.

17.2.2 RNG Data Register (RNGD)

The RNGD register holds random data generated by the RNG module. After reading the register, it is cleared and the DVALID bit of the RNGCST register is cleared. When a new word of valid (random) data becomes available in the RNGD register, the DVALID bit is set and (if enabled) and interrupt request is asserted.

15 – 0
RNGD15:0

17.2.3 RNG Divisor Register High (RNGDIVH)

This register holds the two most significant bits of the RNGDIV clock divisor. See the description of the RNGDIVL register.

15 – 2	1 – 0
Reserved	RNGDIV17:16

Copyright © 2007–2013, Texas Instruments Incorporated

17.2.4 RNG Divisor Register Low (RNGDIVL)

This register holds the 16 least significant bits the RNGDIV clock divisor.

15	0
RNGDIV15:0	

The RNGDIV clock divisor is used to generate the sampling strobe for loading random bits into the shift register. The divisor is applied to the System Clock source. The maximum frequency after division is 800 Hz. For example, a System Clock frequency of 24 MHz would require an RNGDIV value of 30,000 (7530h) or greater. The default RNGDIV value is 0000 83D6h.

18 USB CONTROLLER

The CR16 USB node is an integrated USB node controller that features enhanced DMA support with many automatic data handling features. It is compatible with USB specification versions 1.0 and 1.1.

It integrates the required USB transceiver, a Serial Interface Engine (SIE), and USB endpoint (EP) FIFOs. Seven endpoint pipes are supported: one for the mandatory control endpoint and six to support interrupt, bulk, and isochronous endpoints. Each endpoint pipe has a dedicated FIFO, 8 bytes for the control endpoint and 64 bytes for the other endpoints.

The USB interface requires a PLL Clock frequency of 48 MHz and a System Clock frequency between 12 and 24 MHz.

18.1 FUNCTIONAL STATES

18.1.1 Line Condition Detection

At any given time, the CR16 USB node is in one of the following states

Table 18-1. State Descriptions

State	Descriptions
NodeOperational	Normal operation
NodeSuspend	Device operation suspend due to USB inactivity
NodeResume	Device wake-up from suspended state
NodeReset	Device reset

The NodeSuspend, NodeResume, or NodeReset line condition causes a transition from one operating state to another. These conditions are detected by specialized hardware and reported in the Alternate Event (ALTEV) register. If interrupts are enabled, an interrupt is generated on the occurrence of any of the specified conditions

In addition to the dedicated input to the ICU for generating interrupts on these USB state changes, a wake-up signal is sent to the MIWU (see) when any activity is detected on the USB, if the bus was in the Idle state and the USB node is in the NodeSuspend state. The MIWU can be programmed to generate an edge-triggered interrupt when this occurs.

NodeOperational

This is the normal operating state of the node. In this state, the node is configured for operation on the USB.

NodeSuspend

A USB node is expected to enter NodeSuspend state when 3 ms have elapsed without any detectable bus activity. The CR16 USB node looks for this event and signals it by setting the SD3 bit in the ALTEV register, which causes an interrupt, to be generated (if enabled). Software should respond by putting the CR16 USB node in the NodeSuspend state.

The CR16 USB node can resume normal operation under software control in response to a local event in the device. It can wake up the USB bus via a NodeResume, or when detecting a resume command on the USB bus, which signals an interrupt to the CPU.

Copyright © 2007–2013, Texas Instruments Incorporated

NodeResume

If the host has enabled remote wake-ups from the node, the CR16 USB node can initiate a remote wake-up.

Once software detects the event, which wakes up the bus, it releases the CR16 USB node from NodeSuspend state by initiating a NodeResume on the USB using the NFSR register. The node software must ensure at least 5 ms of Idle on the USB. While in NodeResume state, a constant “K” is signalled on the USB. This should last for at least 1 ms and no more than 5 ms, after which the USB host should continue sending the NodeResume signal for at least an additional 20 ms, and then completes the NodeResume operation by issuing the End Of Packet (EOP) sequence

To successfully detect the EOP, software must enter the USB NodeOperational state by setting the NFSR register.

If no EOP is received from the host within 100 ms, software must reinitiate NodeResume.

Node Reset

When detecting a NodeResume or NodeReset signal while in NodeSuspend state, the CR16 USB node can signal this to the CPU by generating an interrupt.

USB specifications require that a device must be ready to respond to USB tokens within 10 ms after wake-up or reset.

18.2 ENDPOINT OPERATION

18.2.1 Address Detection

Packets are broadcast from the host controller to all nodes on the USB network. Address detection is implemented in hardware to allow selective reception of packets and to permit optimal use of CPU bandwidth. One function address with seven different endpoint combinations is decoded in parallel. If a match is found, then that particular packet is received into the FIFO; otherwise it is ignored.

The incoming USB Packet Address field and Endpoint field are extracted from the incoming bit stream. Then the address field is compared to the Function Address register (FADR). If a match is detected, the Endpoint field is compared to all of the Endpoint Control registers (EPCn) in parallel. A match then causes the payload data to be received or transmitted using the respective endpoint FIFO.

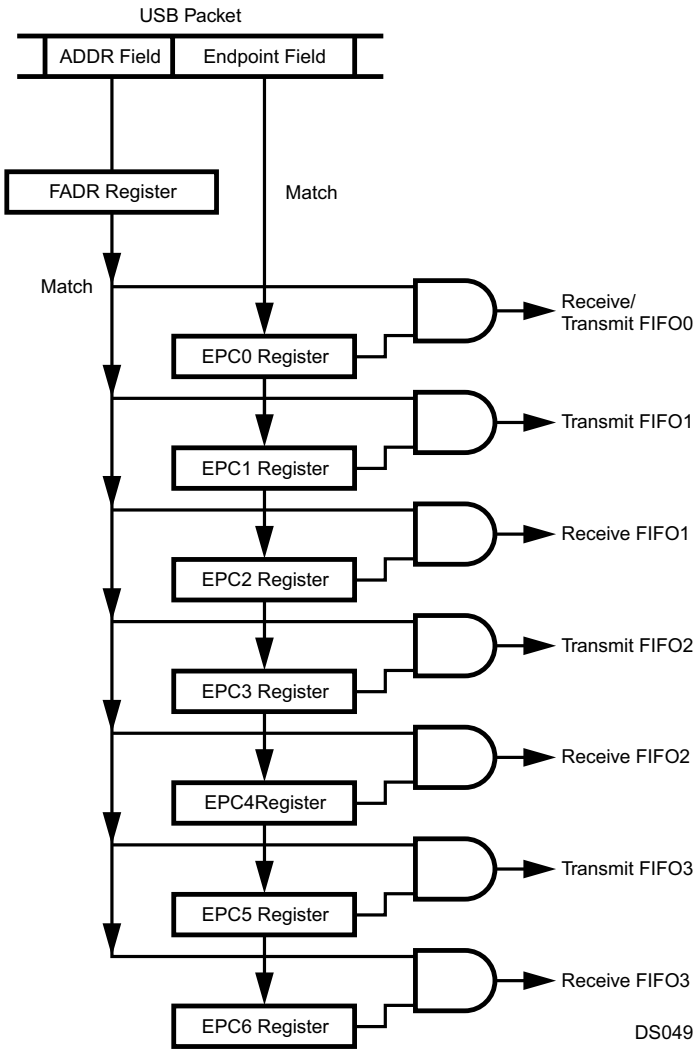

Figure 18-1. USB Function Address/Endpoint Decoding

Copyright © 2007–2013, Texas Instruments Incorporated

18.2.2 Transmit and Receive Endpoint FIFOs

The CR16 USB node uses a total of seven transmit and receive FIFOs: one bidirectional transmit and receive FIFO for the mandatory control endpoint, three transmit FIFOs, and three receive FIFOs. As shown in Table 18-2, the bidirectional FIFO for the control endpoint is 8 bytes deep. The additional unidirectional FIFOs are 64 bytes each for both transmit and receive. Each FIFO can be programmed for one exclusive USB endpoint, used together with one globally decoded USB function address. Software must not enable both transmit and receive FIFOs for endpoint zero at any given time.

Table 18-2. Endpoint FIFO Sizes

Endpoint Number	TX FIFO		RX FIFO	
	Size (Bytes)	Name	Size (Bytes)	Name
0	FIFO0 (bidirectional, 8 bytes)			
1	64	TXFIFO1	-	-
2	-	-	64	RXFIFO1
3	64	TXFIFO2	-	-
4	-	-	64	RXFIFO2
5	64	TXFIFO3	-	-
6	-	-	64	RXFIFO3

If two endpoints in the same direction are programmed with the same endpoint number and both are enabled, data is received or transmitted to/from the endpoint with the lower number, until that endpoint is disabled for bulk or interrupt transfers, or becomes full or empty for ISO transfers. For example, if receive EP2 and receive EP4 both use endpoint 5 and are both isochronous, the first OUT packet is received into EP2 and the second OUT packet into EP4, assuming no software interaction in between. For ISO endpoints, this allows implementing a ping-pong buffer scheme together with the frame number match logic.

Endpoints in different directions programmed with the same endpoint number operate independently.

Bidirectional Control Endpoint FIFO0 Operation

FIFO0 should be used for the bidirectional control endpoint 0. It can be configured to receive data sent to the default address with the DEF bit in the EPC0 register. Isochronous transfers are not supported for the control endpoint.

The Endpoint 0 FIFO can hold a single receive or transmit packet with up to 8 bytes of data. Figure 18-3 shows the basic operation in both receive and transmit direction.

Note: The actual current operating state is not directly visible to software.

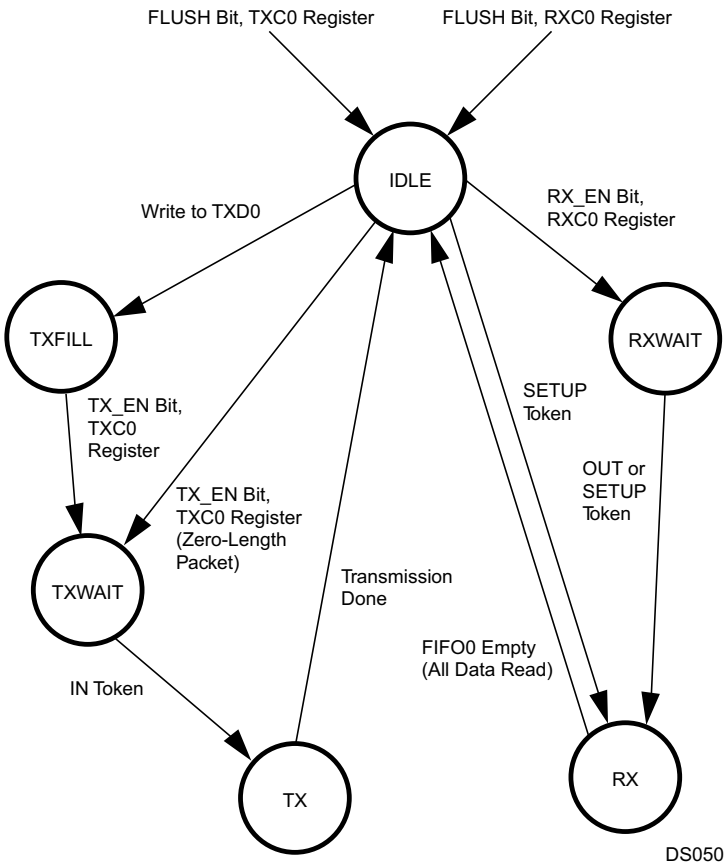

Figure 18-2. Endpoint 0 Operation

A packet written to the FIFO is transmitted if an IN token for the respective endpoint is received. If an error condition is detected, the packet data remains in the FIFO and transmission is retried with the next IN token.

The FIFO contents can be flushed to allow response to an OUT token or to write new data into the FIFO for the next IN token.

If an OUT token is received for the FIFO, software is informed that the FIFO has received data only if there was no error condition (CRC or STUFF error). Erroneous receptions are automatically discarded.

Copyright © 2007–2013, Texas Instruments Incorporated

Transmit Endpoint FIFO Operation (TXFIFO1, TXFIFO2, TXFIFO3)

The Transmit FIFOs for endpoints 1, 3, and 5 support bulk, interrupt, and isochronous USB packet transfers larger than the actual FIFO size. Therefore, software must update the FIFO contents while the USB packet is transmitted on the bus. Figure 18-3 illustrates the operation of the transmit FIFOs.

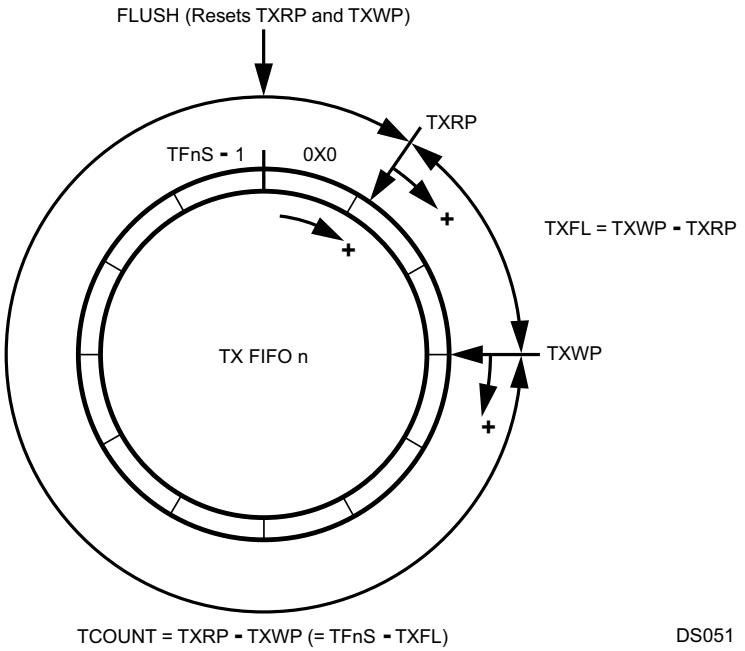

Figure 18-3. Transmit FIFO Operation

TFnS	The Transmit FIFO n Size is the total number of bytes available within the FIFO.
TXRP	The Transmit Read Pointer is incremented every time the Endpoint Controller reads from the transmit FIFO. This pointer wraps around to zero if TFnS is reached. TXRP is never incremented beyond the value of the write pointer TXWP. An underrun condition occurs if TXRP equals TXWP and an attempt is made to transmit more bytes when the LAST bit in the TXCMDx register is not set.
TXWP	The Transmit Write Pointer is incremented every time software writes to the transmit FIFO. This pointer wraps around to zero if TFnS is reached. If an attempt is made to write more bytes to the FIFO than actual space available (FIFO overrun), the write to the FIFO is ignored. If so, TCOUNT is checked for an indication of the number of empty bytes remaining.
TXFL	The Transmit FIFO Level indicates how many bytes are currently in the FIFO. A FIFO warning is issued if TXFL decreases to a specific value. The respective WARNn bit in the FWR register is set if TXFL is equal to or less than the number specified by the TFWL bit in the TXCn register.
TCOUNT	The Transmit FIFO Count indicates how many empty bytes can be filled within the transmit FIFO. This value is accessible by software in the TXSn register.

Receive Endpoint FIFO Operation (RXFIFO1, RXFIFO2, RXFIFO3)

The Receive FIFOs for endpoints 2, 4, and 6 support bulk, interrupt, and isochronous USB packet transfers larger than the actual FIFO size. If the packet length exceeds the FIFO size, software must read the FIFO contents while the USB packet is being received on the bus. Figure 18-4 shows the detailed behavior of receive FIFOs.

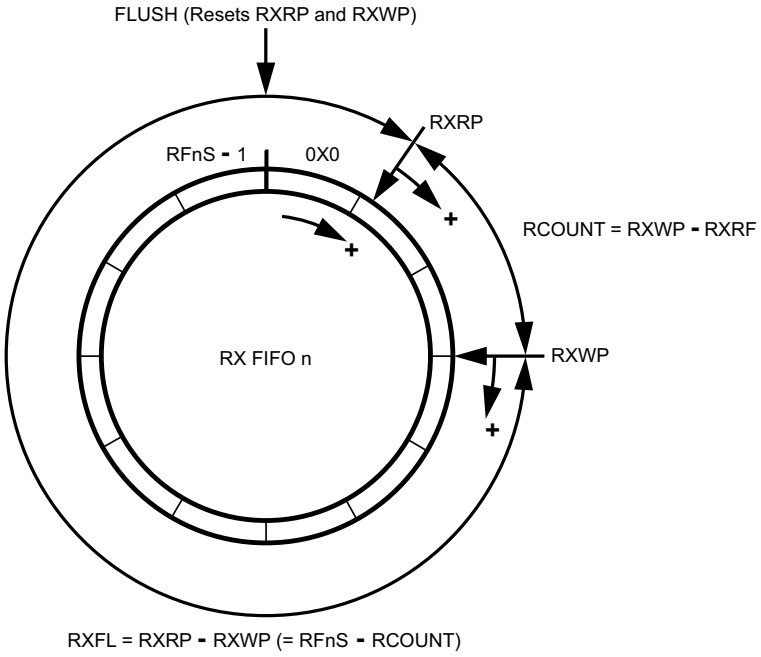

Figure 18-4. Receive FIFO Operation

Copyright © 2007–2013, Texas Instruments Incorporated

18.3 USB CONTROLLER REGISTERS

The CR16 USB node has a set of memory-mapped registers that can be read/written from the CPU bus to control the USB interface. Some register bits are reserved; reading from these bits returns undefined data. Reserved register bits must always be written with 0.

Table 18-3. USB Controller Registers

Name	Address	Description
MCNTRL	FF FD80h	Main Control Register
NFSR	FF FD8Ah	Node Functional State Register
MAEV	FF FD8Ch	Main Event Register
ALTEV	FF FD90h	Alternate Event Register
MAMSK	FF FD8Eh	Main Mask Register
ALTMSK	FF FD92h	Alternate Mask Register
TXEV	FF FD94h	Transmit Event Register
TXMSK	FF FD96h	Transmit Mask Register
RXEV	FF FD98h	Receive Event Register
RXMSK	FF FD9Ah	Receive Mask Register
NAKEV	FF FD9Ch	NAK Event Register
NAKMSK	FF FD9Eh	NAK Mask Register
FWEV	FF FDA0h	FIFO Warning Event Register
FWMSK	FF FDA2h	FIFO Warning Mask Register
FNH	FF FDA4h	Frame Number High Byte Register
FNL	FF FDA6h	Frame Number Low Byte Register
FAR	FF FD88h	Function Address Byte Register
DMACNTRL	FF FDA8h	DMA Control Register
DMAEV	FF FDAAh	DMA Event Register
DMAMSK	FF FDACh	DMA Mask Register
MIR	FF FDAEh	Mirror Register
DMACNT	FF FDB0h	DMA Count Register
DMAERR	FF FDB2h	DMA Error Register
EPC0	FF FDC0h	Endpoint Control 0 Register
EPC1	FF FDD0h	Endpoint Control 1 Register
EPC2	FF FDD8h	Endpoint Control 2 Register
EPC3	FF FDE0h	Endpoint Control 3 Register
EPC4	FF FDDE8h	Endpoint Control 4 Register
EPC5	FF FDF0h	Endpoint Control 5 Register
EPC6	FF FDF8h	Endpoint Control 6 Register
TXS0	FF FDC4h	Transmit Status 0 Register
TXS1	FF FDD4h	Transmit Status 1 Register
TXS2	FF FDE4h	Transmit Status 2 Register
TXS3	FF FDF4h	Transmit Status 3 Register
TXC0	FF FDC6h	Transmit Command 0 Register
TXC1	FF FDD6	Transmit Command 1 Register
TXC2	FF FDE6h	Transmit Command 2 Register
TXC3	FF FDF6h	Transmit Command 3 Register
TXD0	FF FDC2h	Transmit Data 0 Register
TXD1	FF FDD2h	Transmit Data 1 Register
TXD2	FF FDE2h	Transmit Data 2 Register
TXD3	FF FDF2h	Transmit Data 3 Register

Copyright © 2007–2013, Texas Instruments Incorporated

Table 18-3. USB Controller Registers (continued)

RXS0	FF FDCCh	Receive Status 0 Register
RXS1	FF FDDCh	Receive Status 1 Register
RXS2	FF FDECh	Receive Status 2 Register
RXS3	FF FDFCh	Receive Status 3 Register
RXC0	FF FDCEh	Receive Command 0 Register
RXC1	FF FDDEh	Receive Command 1 Register
RXC2	FF FDEEh	Receive Command 2 Register
RXC3	FF FDFEh	Receive Command 3 Register
RXD0	FF FDCAh	Receive Data 0 Register
RXD1	FF FDDAh	Receive Data 2 Register
RXD2	FF FDEAh	Receive Data 2 Register
RXD3	FF FDFAh	Receive Data 3 Register

18.3.1 Main Control Register (MCNTRL)

The MCNTRL register controls the main functions of the CR16 USB node. The MCNTRL register provides read/write access from the CPU bus. Reserved bits must be written with 0, and they return 0 when read. It is clear after reset.

7 – 4	3	2 – 1	0
Reserved	NAT	Reserved	USBEN

USBEN — The USB Enable controls whether the USB module is enabled. If the USB module is disabled, the 48 MHz clock within the USB node is stopped, all USB registers are initialized to their reset state, and the USB transceiver forces SE0 on the bus to prevent the hub from detected the USB node. The USBEN bit is clear after reset.
0 – The USB module is disabled.
1 – The USB module is enabled.

NAT — The Node Attached indicates that this node is ready to be detected as attached to USB. When clear, the transceiver forces SE0 on the USB node controller to prevent the hub (to which this node is connected) from detecting an attach event. After reset or when the USB node is disabled, this bit is cleared to give the device time before it must respond to commands. After this bit has been set, the device no longer drives the USB and should be ready to receive Reset signaling from the hub.
0 – Node not ready to be detected as attached.
1 – Node ready to be detected as attached.

Copyright © 2007–2013, Texas Instruments Incorporated

18.3.2 Node Functional State Register (NFSR)

The NFSR register reports and controls the current functional state of the USB node. The NFSR register provides read/write access. It is clear after reset.

7	2	1	0
Reserved		NFS	

NFS — The Node Functional State bits set the node state, as shown in Table 18-4. Software should initiate all required state transitions according to the respective status bits in the Alternate Event (ALTEV) register.

Table 18-4. USB Functional States

NFS	Node State	Description
00	NodeReset	This is the USB Reset state. This is entered upon a module reset or by software upon detection of a USB Reset. Upon entry, all endpoint pipes are disabled. DEF in the Endpoint Control 0 (EPC0) register and AD_EN in the Function Address (FAR) register should be cleared by software on entry to this state. On exit, DEF should be reset so the device responds to the default address.
01	NodeResume	In this state, resume “K” signaling is generated. This state should be entered by software to initiate a remote wake-up sequence by the device. The node must remain in this state for at least 1 ms and no more than 15 ms.
10	NodeOperational	This is the normal operational state for operation on the USB bus.
11	NodeSuspend	Suspend state should be entered by software on detection of a Suspend event while in Operational state. While in Suspend state, the transceivers operate in their low-power suspend mode. All endpoint controllers and the bits TX_EN, LAST, and RX_EN are reset, while all other internal states are frozen. On detection of bus activity, the RESUME bit in the ALTEV register is set. In response, software can cause entry to NodeOperational state.

18.3.3

The Main Event Register summarizes and reports the main events of the USB transactions. This register provides read-only access. The MAEV register is clear after reset.

7	6	5	4	3	2	1	0
INTR	RX_EV	ULD	NAK	FRAME	TX_EV	ALT	WARN

WARN — The Warning Event bit indicates whether one of the unmasked bits in the FIFO Warning Event (FWEV) register has been set. This bit is cleared by reading the FWEV register.
0 – No warning event occurred.
1 – A warning event has occurred.

ALT — The Alternate Event bit indicates whether one of the unmasked ALTEV register bits has been set. This bit is cleared by reading the ALTEV register.
0 – No alternate event has occurred.
1 – An alternate event has occurred.

TX_EV — The Transmit Event bit indicates whether any of the unmasked bits in the Transmit Event (TXEV) register (TXFIFOn or TXUNDRNn) is set. Therefore, it indicates that an IN transaction has been completed. This bit is cleared when all the TX_DONE bits and the TXUN- DRN bits in each Transmit Status (TXSn) register are cleared.
0 – No transmit event has occurred.
1 – A transmit event has occurred.

FRAME — The Frame Event bit indicates whether the frame counter has been updated with a new value, due to receipt of a valid SOF packet on the USB or to an artificial update if the frame counter was unlocked or a frame was missed. This bit is cleared when the register is read.
0 – The frame counter has not been updated.
1 – Frame counter has been updated.

NAK	The Negative Acknowledge Event indicates whether one of the unmasked NAK Event (NAKEV) register bits has been set. This bit is cleared when the NAKEV register is read. 0 – No unmasked NAK event has occurred. 1 – An unmasked NAK event has occurred.
UL	The Unlocked/Locked Detected bit is set when the frame timer has either entered unlocked condition from a locked condition, or has re-entered a locked condition from an unlocked condition as determined by the UL bit in the Frame Number (FNH or FNL) register. This bit is cleared when the register is read. 0 – Frame timer has not entered an unlocked condition from a locked condition or re-entered a locked condition from an unlocked condition. 1 – Frame timer has either entered an unlocked condition from a locked condition or re-entered a locked condition from an unlocked condition.
RX_EV	The Receive Event bit is set if any of the unmasked bits in the Receive Event (RXEV) register is set. It indicates that a SETUP or OUT transaction has been completed. This bit is cleared when all of the RX_LAST bits in each Receive Status (RXSn) register and all RX- OVRRN bits in the RXEV register are cleared. 0 – No receive event has occurred. 1 – A receive event has occurred
INTR	The Master Interrupt Enable bit is hardwired to 0 in the Main Event (MAEV) register; bit 7 in the Main Mask (MAMSK) register is the Master Interrupt Enable. 0 – USB interrupts disabled. 1 – USB interrupts enabled.

18.3.4 Main Mask Register (MAMSK)

The MAMSK register masks out events reported in the MAEV registers. A set bit enables the interrupts for the respective event in the MAEV register. If the corresponding bit is clear, interrupt generation for this event is disabled. This register provides read/write access. The MAMSK register is clear after reset.

7	6	5	4	3	2	1	0
INTR	RX_EV	ULD	NAK	FRAME	TX_EV	ALT	WARN

18.3.5 Alternate Event Register (ALTEV)

The ALTEV register summarizes and reports the further events in the USB node. This register provides read-only access. The ALTEV register is clear after reset.

7	6	5	4	3	2	1	0
RESUME	RESET	SD5	SD3	EOP	DMA	Reserved	

DMA	The DMA Event bit indicates that one of the unmasked bits in the DMA Event (DMAEV) register has been set. The DMA bit is read-only and clear, when the DMAEV register is cleared. 0 – No DMA event has occurred. 1 – A DMA event has occurred.
EOP	The End of Packet bit indicates whether a valid EOP sequence has been detected on the USB. It is used when this device has initiated a Remote wake-up sequence to indicate that the Resume sequence has been acknowledged and completed by the host. This bit is cleared when the register is read. 0 – No EOP sequence detected. 1 – EOP sequence detected.
SD3	The Suspend Detect 3 ms bit is set after 3 ms of IDLE have been detected on the upstream port, indicating that the device should be suspended. The suspend occurs under software control by writing the suspend value to the Node Functional State (NFSR) register. This bit is cleared when the register is read. 0 -- No 3 ms in IDLE has been detected 1 -- 3 ms in IDLE has been detected

Copyright © 2007–2013, Texas Instruments Incorporated

SD5	The Suspend Detect 5 ms bit is set after 5 ms of IDLE have been detected on the upstream port, indicating that this device is permitted to perform a remote wake-up operation. The resume may be initiated under software control by writing the resume value to the NFSR register. This bit is cleared when the register is read. 0 – No 5 ms in IDLE has been detected. 1 – 5 ms in IDLE has been detected.
RESET	The Reset bit is set when 2.5 s of SEO have been detected on the upstream port. In response, the functional state should be reset (NFS in the NFSR register is set to RESET), where it must remain for at least 100 s. The functional state can then return to Operational state. This bit is cleared when the register is read. 0 – No 2.5 s in SEO have been detected. 1 – 2.5 s in SEO have been detected.
RESUME	The Resume bit indicates whether resume signaling has been detected on the USB when the device is in Suspend state (NFS in the NFSR register is set to SUSPEND), and a non-IDLE signal is present on the USB, indicating that this device should begin its wake-up sequence and enter Operational state. Resume signaling can only be detected when the 48 MHz PLL clock is enabled to the USB controller. This bit is cleared when the register is read. 0 – No resume signaling detected. 1 – Resume signaling detected.

18.3.6 Alternate Mask Register (ALTMSK)

A set bit in the ALTMSK register enables automatic setting of the ALT bit in the MAEV register when the respective event in the ALTEV register occurs. Otherwise, setting MAEV.ALT bit is disabled. The ALTMSK register is clear after reset. It provides read/write access from the CPU bus.

7	6	5	4	3	2	1	0
RESUME	RESET	SD5	SD3	EOP	DMA	Reserved	

18.3.7 Transmit Event Register (TXEV)

The TXEV register reports the current status of the FIFOs, used by the three Transmit Endpoints. The TXEV register is clear after reset. It provides read-only access.

7	4	3	0
TXUDRRN		TXFIFO	

TXFIFO	The Transmit FIFO n bits are copies of the TX_DONE bits from the corresponding Transmit Status registers (TXSn). A bit is set when the IN transaction for the corresponding transmit endpoint n has been completed. These bits are cleared when the corresponding TXSn register is read.
TXUDRRN	The Transmit Underrun n bits are copies of the respective TX_URUN bits from the corresponding Transmit Status registers (TXSn). Whenever any of the Transmit FIFOs underflows, the respective TXUDRRN bit is set. These bits are cleared when the corresponding Transmit Status register is read. Note: Since Endpoint 0 implements a store and forward principle, an underrun condition for FIFO0 cannot occur. This results in the TXUDRRN0 bit always being read as 0.

18.3.8 Transmit Mask Register (TXMSK)

The TXMSK register is used to select the bits of the TXEV registers, which causes the TX_EV bit in the MAEV register to be set. When a bit is set and the corresponding bit in the TXEV register is set, the TX_EV bit in the MAEV register is set. When clear, the corresponding bit in the TXEV register does not cause TX_EV to be set. The TXMSK register provides read/write access. It is clear after reset.

7	4	3	0
TXUDRRN		TXFIFO	

18.3.9 Receive Event Register (RXEV)

The RXEV register reports the current status of the FIFO, used by the three Receive Endpoints. The RXEV register is clear after reset. It provides read-only access from the CPU bus.

7 – 4	3 – 0
RXOVRRN	RXFIFO

RXFIFO	The Receive FIFO n are set whenever either RX_ERR or RX_LAST in the respective Receive Status registers (RXSn) are set. Reading the corresponding RXSn register automatically clears these bits. The CR16 USB node discards all packets for Endpoint 0 received with errors. This is necessary in case of retransmission due to media errors, ensuring that a good copy of a SETUP packet is captured. Otherwise, the FIFO may potentially be tied up, holding corrupted data and unable to receive a retransmission of the same packet (the RXFIFO0 bit only reflects the value of RX_LAST for Endpoint 0). If data streaming is used for the receive endpoints (EP2, EP4 and EP6), software must check the respective RX_ERR bits to ensure the packets received are not corrupted by errors.
RXOVRRN	The Receive Overrun n bits are set when an overrun condition is indicated in the corresponding receive FIFO n. They are cleared when the register is read. Software must check the respective RX_ERR bits that packets received for the other receive endpoints (EP2, EP4 and EP6) are not corrupted by errors, as these endpoints support data streaming (packets which are longer than the actual FIFO depth).

18.3.10 Receive Mask Register (RXMSK)

The RXMSK register is used to select the bits of the RXEV register, which cause the RX_EV bit in the MAEV register to be set. When set and the corresponding bit in the RXEV register is set, RX_EV bit in the MAEV register is set. When clear, the corresponding bit in the RXEV register does not cause the RX_EV bit to be set. The RXMSK register provides read/write access. This register is clear after reset.

7 – 4	3 – 0
RXOVRRN	RXFIFO

18.3.11 NAK Event Register (NAKEV)

A bit in the NAKEV register is set when a Negative Acknowledge (NAK) was generated by the corresponding endpoint. The NAKEV register provides read-only access from the CPU bus. It is clear after reset.

7 – 4	3 – 0
OUT	IN

IN	The IN n bits are set when a NAK handshake is generated for an enabled address/endpoint combination (AD_EN in the Function Address, FAR, register is set and EP_EN in the Endpoint Control, EPCx, register is set) in response to an IN token. These bits are cleared when the register is read.
OUT	The OUT n bits are set when a NAK handshake is generated for an enabled address/ endpoint combination (AD_EN in the FAR register is set and EP_EN in the EPCx register is set) in response to an OUT token. These bits are not set if NAK is generated as result of an overrun condition. They are cleared when the register is read.

18.3.12 NAK Mask Register (NAKMSK)

The NAKMSK register is used to select the bits of the NAKEV register, which cause the NAK bit in the MAEV register to be set. When set and the corresponding bit in the NAKEV register is set, the NAK bit in the MAEV register is set. When cleared, the corresponding bit in the NAKEV register does not cause NAK to be set. The NAKMSK register provides read/write access. It is clear after reset.

7 – 4	3 – 0
OUT	IN

Copyright © 2007–2013, Texas Instruments Incorporated

18.3.13 FIFO Warning Event Register (FWEV)

The FWEV register signals whether a receive or transmit FIFO has reached its warning limit. It reports the status for all FIFOs, except for the Endpoint 0 FIFO, as no warning limit can be specified for this FIFO. The FWEV register provides read-only access from the CPU bus. It is clear after reset.

7 – 5	4	3 – 1	0
RXWARN3:1	Res.	TXWARN3:1	Res.

TXWARN3:1 The Transmit Warning n bits are set when the respective transmit endpoint FIFO reaches the warning limit, as specified by the TFWL bits of the respective TXCn register, and transmission from the respective endpoint is enabled. These bits are cleared when the warning condition is cleared by either writing new data to the FIFO when the FIFO is flushed, or when transmission is done, as indicated by the TX_DONE bit in the TXSn register.

RXWARN3:1 The Receive Warning n bits are set when the respective receive endpoint FIFO reaches the warning limit, as specified by the RFWL bits of the respective EPCx register. These bits are cleared when the warning condition is cleared by either reading data from the FIFO or when the FIFO is flushed.

18.3.14 FIFO Warning Mask Register (FWMSK)

The FWMSK register selects which FWEV bits are reported in the MAEV register. A set FWMSK bit with the corresponding bit in the FWEV register set, causes the WARN bit in the MAEV register to be set. When clear, the corresponding bit in the FWEV register does not cause WARN to be set. The FWMSK register provides read/write access. This register is clear after reset.

7 – 5	4	3 – 1	0
RXWARN3:1	Res.	TXWARN3:1	Res.

18.3.15 Frame Number High Byte Register (FNH)

The FNH register contains the three most significant bits (MSB) of the current frame counter as well as status and control bits for the frame counter. This register is loaded with C0h after reset. It provides access from the CPU bus as described below.

7	6	5	4 – 3	2 – 0
MF	UL	RFC	Reserved	FN10:8

FN10:8 The Frame Number field holds the three most significant bits (MSB) of the current frame number, received in the last SOF packet. If a valid frame number is not received within 12060 bit times (Frame Length Maximum, FLMAX, with tolerance) of the previous change, the frame number is incremented artificially. If two successive frames are missed or are incorrect, the current FN is frozen and loaded with the next frame number from a valid SOF packet. If the frame number low byte was read by software before reading the FNH register, software actually reads the contents of a buffer register which holds the value of the three frame number bits of this register when the low byte was read. Therefore, the correct sequence to read the frame number is: FNL, FNH. Read operations to the FNH register, without first reading the Frame Number Low Byte (FNL) register directly, read the actual value of the three MSBs of the frame number. The FN bits provide read-only access. On reset, the FN bits are cleared.

RFC The Reset Frame Count bit is used to reset the frame number to 000h. This bit always reads as 0. Due to the synchronization elements the frame counter reset actually occurs a maximum of 3 USB clock cycles (12 MHz) plus 2.5 CPU clock cycles after the write to the RFC bit.
0 – Writing 0 has no effect.
1 – Writing 1 resets the frame counter.

UL The Unlock Flag bit indicates that at least two frames were received without an expected frame number, or that no valid SOF was received within 12060 bit times. If this bit is set, the frame number from the next valid SOF packet is loaded in FN. The UL bit provides read-only access. After reset, this bit is set. This bit is set by the hardware and is cleared by reading the FNH register.
0 – No condition indicated.
1 – At least two frames were received without an expected frame number, or no valid SOF was received within 12060 bit times.

MF The Missed SOF bit is set when the frame number in a valid received SOF does not match the expected next value, or when an SOF is not received within 12060 bit times. The MF bit provides read-only access. On reset, this bit is set. This bit is set by the hardware and is cleared by reading the FNH register.
0 – No condition indicated.
1 – The frame number in a valid SOF does not match the expected next value, or no valid SOF was received within 12060 bit times.

Copyright © 2007–2013, Texas Instruments Incorporated

18.3.16 Frame Number Low Byte Register (FNL)

The FNL register holds the low byte of the frame number, as described above. To ensure consistency, reading this low byte causes the three frame number bits in the FNH register to be locked until this register is read. The correct sequence to read the frame number is: FNL first, followed by FNH. This register provides read-only access. After reset, the FNL register is clear.

7							0
FN7:0							

Note: If the frame counter is updated due to a receipt of a valid SOF or an artificial update (that is, missed frame or unlocked/locked detect), it will take the synchronization elements a maximum of 2.5 CPU clock cycles to update the FNH and FNL registers.

18.3.17 Function Address Register (FAR)

The Function Address Register specifies the device function address. The different endpoint numbers are set for each endpoint individually using the Endpoint Control registers. The FAR register provides read/write access. After reset, this register is clear. If the DEF bit in the Endpoint Control 0 register is set, Endpoint 0 responds to the default address.

7	6						0
AD_EN	AD						

AD — The Address field holds the 7-bit function address used to transmit and receive all tokens addressed to this device.

AD_EN — The Address Enable bit controls whether the AD field is used for address comparison. If not, the device does not respond to any token on the USB bus.
0 – The device does not respond to any token on the USB bus.
1 – The AD field is used for address comparison.

18.3.18 Control Register (DMACNTRL)

The DMACNTRL register controls the main DMA functions of the CR16 USB node. The DMACTRL register provides read/write access. This register is clear after reset.

7	6	5	4	3	2		0
DEN	IGNRXTGL	DTGL	ADMA	DMOD	DSRC		

DSRC — The DMA Source bit field holds the binary-encoded value that specifies which of the endpoints, 1 to 6, is enabled for DMA support. The DSRC bits are cleared on reset. Table 18-5 summarizes the DSRC bit settings.

Table 18-5. DSRC Bit Description

DSRC	Endpoint Number
000	1
001	2
010	3
011	4
100	5
101	6
11x	Reserved

Copyright © 2007–2013, Texas Instruments Incorporated

DMOD	The DMA Mode bit specifies when a DMA request is issued. If clear, a DMA request is issued on transfer completion. For transmit endpoints EP1, EP3, and EP5, the data is completely transferred, as indicated by the TX_DONE bit (to fill the FIFO with new transmit data). For receive endpoints EP2, EP4, and EP6, this is indicated by the RX_LAST bit. When the DMOD bit is set, a DMA request is issued when the respective FIFO warning bit is set. The DMOD bit is cleared after reset. 0 – DMA request is issued on transfer completion. 1 – DMA request is issued when the respective FIFO warning bit is set.
ADMA	The Automatic DMA bit enables Automatic DMA (ADMA) and automatically enables the selected receive or transmit endpoint. Before ADMA mode can be enabled, the DEN bit in the DMA Control (DMACNTRL) register must be cleared. ADMA mode functions until any bit in the DMA Event (DMAEV) register is set, except for NTGL. To initiate ADMA mode, all bits in the DMAEV register must be cleared, except for NTGL. 0 – Automatic DMA disabled. 1 – Automatic DMA enabled.
IGNRXTGL	The Ignore RX Toggle controls whether the compare between the NTGL bit in the DMAEV register and the TOGGLE bit in the respective RXSn register is ignored during receive operations. If the compare is ignored, a mismatch of the bits during a receive operation does not stop ADMA operation. If the compare is not ignored, the ADMA stops in case of a mismatch of the two toggle bits. After reset, this bit is cleared. 0 – Compare toggle bits. 1 – Ignore toggle bits.
DEN	The DMA Enable bit enables DMA mode. If DMA mode is disabled and the current DMA cycle has been completed (or was not yet issued) the DMA transfer is terminated. This bit is cleared after reset. 0 – DMA mode disabled. 1 – DMA mode enabled.

18.3.19 DMA Event Register (DMAEV)

The DMAEV register bits are used in ADMA mode. Bits 0 to 3 may cause an interrupt if not cleared, even if the device is not set to ADMA mode. Until all of these bits are cleared, ADMA mode cannot be initiated. Conversely, ADMA mode is automatically terminated when any of these bits are set. The DMAEV register provides access from the CPU bus as described below. It is clear after reset.

7	6	5	4	3	2	1	0
Reserved		NTGL	ARDY	DSIZ	DCNT	DERR	DSHLT

DSHLT — The DMA Software Halt bit is set when ADMA operations have been halted by software. This bit is set by the hardware only after the DMA engine completes any necessary cleanup operations and returns to Idle state. The DSHLST bits provide read access and can only be written with a 0 from the CPU bus. After reset these bits are cleared.
0 – No software ADMA halt.
1 – ADMA operations have been halted by software.

DERR — The DMA Error bit is set to indicate that a packet has not been received or transmitted correctly. It is also set, if the TOGGLE bit in the RXSx/TXSx register does not equal the NTGL bit in the DMAEV register after packet reception/transmission. (Note that this comparison is made before the NTGL bit changes state due to packet transfer). For receiving, the DERR bit is equivalent to the RX_ERR bit. For transmitting, the DERR bit is equivalent to the TX_DONE bit (set) and the ACK_STAT bit (not set). If the AEH bit in the DMA Error Count (DMAERR) register is set, the DERR bit is not set until DMAERRCNT in the DMAERR register is cleared, and another error is detected. Errors are handled as specified in the DMAERR register. The DERR bit provides read access and can only be written with a 0 from the CPU bus. After reset this bit is cleared.
0 – No DMA error occurred.
1 – DMA error occurred.

DCNT — The DMA Count bit is set when the DMA Count (DMACNT) register is 0 (see the DMACNT register for more information). The DCNT bit provides read access and can only be written with a 0 from the CPU bus. After reset this bit is cleared.
0 – DMACNT register is not 0.
1 – DMACNT register is 0.

DSIZ — The DMA Size bit is only significant for DMA receive operations. It indicates, by being set, that a packet has been received which is less than the full length of the FIFO. This normally indicates the end of a multi-packet transfer. The DSIZ bit provides read access and can only be written with a 0 from the CPU bus. After reset this bit is cleared.
0 – No condition indicated.
1 – A packet has been received which is less than the full length of the FIFO.

ARDY — The Automatic DMA Ready bit is set when the ADMA mode is ready and active. After setting the DMACNTRL.ADMA bit and the active USB transaction (if any) is finished and the specified endpoint (DMACNTRL.DSRC) is flushed, the USB node enters ADMA mode. This bit is automatically cleared when the ADMA mode is finished and the current DMA operation is completed. After reset the ARDY bit is cleared.
0 – ADMA mode not ready.
1 – ADMA mode ready and active.

NTGL — The Next Toggle bit determines the toggle state of the next data packet sent (if transmitting), or the expected toggle state of the next data packet (if receiving). This bit is initialized by writing to the DTGL bit of the DMACNTRL register. It then changes state with every packet sent or received on the endpoint presently selected by DSRC[2:0]. If DTGL write operation occurs simultaneously with the bit update operation, the write takes precedence. If transmitting, whenever ADMA operations are in progress the DTGL bit overrides the corresponding TOGGLE bit in the TXCx register. In this way, the alternating data toggle occurs correctly on the USB. Note that there is no corresponding mask bit for this event because it is not used to generate interrupts. The NTGL bit provides read-only access from the CPU bus and is cleared after reset.

Copyright © 2007–2013, Texas Instruments Incorporated

18.3.20 DMA Mask Register (DMAMSK)

Any set bit in the DMAMSK register enables automatic setting of the DMA bit in the ALTEV register when the respective event in the DMAEV register occurs. Otherwise, setting the DMA bit is disabled. For a description of bits 0 to 3, see the DMAEV register. The DMAMSK register provides read/ write access. After reset it is clear. Reading reserved bits returns undefined data.

7 – 4	3	2	1	0
Reserved	DSIZ	DCNT	DERR	DSHLT

18.3.21 Mirror Register (MIR)

The MIR register is a read-only register. Because reading it does not alter the state of the TXSn or RXSn register to which it points, software can freely check the status of the channel. At reset it is initialized to 1Fh.

7 – 0
STAT

STAT The Status field mirrors the status bits of the transmitter or receiver n selected by the DSRC[2:0] field in the DMACNTRL register (DMA need not be active or enabled). It corresponds to TXSn or RXSn, respectively.

18.3.22 DMA Count Register (DMACNT)

The DMACNT register specifies a maximum count for ADMA operations. The DMACNT register provides read/ write access. After reset this register is clear.

7 – 0
DCOUNT

DCOUNT The DMA Count field is decremented on completion of a DMA operation until it reaches 0. Then the DCNT bit in the DMA Event register is set, only when the next successful DMA operation is completed. This register does not underflow. For receive operations, this count decrements when the packet is received successfully, and then transferred to memory using DMA. For transmit operations, this count decrements when the packet is transferred from memory using DMA, and then transmitted successfully. Software loads DCOUNT with (number of packets to transfer) - 1. If a DMACNT write operation occurs simultaneously with the decrement operation, the write takes precedence.

18.3.23 DMA Error Register (DMAERR)

The DMAERR register holds the 7-bit DMA error counter and a control bit to specify DMA error handling. The DMAERR register provides read/write access. It is clear after reset.

7	6 … 0
AEH	DMAERRCNT

DMAERRCNT The DMA Error Counter, together with the automatic error handling feature, defines the maximum number of consecutive bus errors before ADMA mode is stopped. Software can set the 7-bit counter to a preset value. Once ADMA is started, the counter decrements from the preset value by 1 every time a bus error is detected. Every successful transaction resets the counter back to the preset value. When ADMA mode is stopped, the counter is also set back to the preset value. If the counter reaches 0 and another erroneous packet is detected, the DERR bit in the DMA Event register is set. This register cannot underrun. Software loads DMAERRCNT with 3D (maximum number of allowable transfer attempts) - 1. A write access to this register is only possible when ADMA is inactive. Otherwise, it is ignored. Reading from this register while ADMA is active returns the current counter value. Reading from it while ADMA is inactive returns the preset value. The counter decrements only if the AEH bit is set (automatic error handling activated).

AEH The Automatic Error Handling bit has two different meanings, depending on the current mode:

- *Non-Isochronous mode*—This mode is used for bulk, interrupt and control transfers. Setting AEH in this mode enables automatic handling of packets containing CRC or bit-stuffing errors. If this bit is set during transmit operations, the USB node automatically reloads the FIFO and reschedules the packet to which the host did not return an ACK. If this bit is clear, automatic error handling ceases. If this bit is set during receive operations, a packet received with an error (as specified in the DERR bit description in the DMAEV register) is automatically flushed from the FIFO being used so that the packet can be received again. If this bit is cleared, automatic error handling ceases.
- *Isochronous mode*—Setting this bit allows the USB node to ignore packets received with errors (as specified in the DERR bit description in the DMAMSK register). If this bit is set during receive operations, the USB node is automatically flushed and the receive FIFO is reset to 7 4 3 2 1 0 Reserved DSIZ DCNT DERR DSHLT 7 0 STAT 7 0 DCOUNT 7 6 0 AEH DMAERRCNT Not Recommended for New Designs 105 www.TI.com CP3BT26 receive the next packet. The erroneous packet is ignored and not transferred via DMA. If this bit is cleared, automatic error handling ceases.

18.3.24 Endpoint Control 0 Register (EPC0)

The EPC0 register controls the mandatory Endpoint 0. It is clear after reset. Reserved bits read undefined data.

7	6	5 … 4	3 … 0
STALL	DEF	Reserved	EP

EP The Endpoint Address field holds the 4-bit endpoint address. For Endpoint 0, these bits are hardwired to 0000b. Writing a 1 to any of the EP bits is ignored.

DEF The Default Address aids in the transition from the default address to the assigned address. When set, the device responds to the default address without regard to the contents of FAR6-0/EP03-0 fields. When an IN packet is transmitted for the endpoint, the DEF bit is automatically cleared. This bit provides read/ write access from the CPU bus. After reset, this bit is clear. The transition from the default address 00000000000b to an address assigned during bus enumeration may not occur in the middle of the SET_ADDRESS control sequence. This is necessary to complete the control sequence. However, the address must change immediately after this sequence finishes in order to avoid errors when another control sequence immediately follows the SET_ADDRESS command. On USB reset, software has 10 ms for setup, and should write 80h to the FAR register and 00h to the EPC0 register. On receipt of a SET_ADDRESS command, software must write 40h to the EPC0 register and 80h to the FAR register. It must then queue a zero length IN packet to complete the status phase of the SET_ADDRESS control sequence.
0 – Do not respond to the default address.
1 – Respond to default address.

STALL The Stall bit can be used to enable STALL handshakes under the following conditions:

- The transmit FIFO is enabled and an IN token is received.
- The receive FIFO is enabled and an OUT token is received.

A SETUP token does not cause a STALL handshake to be generated when this bit is set. After transmitting the STALL handshake, the RX_LAST and the TX_DONE bits in the respective Receive/Transmit Status registers are set. This bit allows read/write access from the CPU bus. After reset this bit is cleared.
0 – Disable STALL handshakes.
1 – Enable STALL handshakes.

Copyright © 2007–2013, Texas Instruments Incorporated

18.3.25 Transmit Status 0 Register (TXS0)

The TXS0 register reports the transmit status of the mandatory Endpoint 0. It is loaded with 08h after reset. This register allows read-only access from the CPU bus.

7	6	5	4	3	0
Res.	ACK_STAT	TX_DONE	Res.	TCOUNT	

TCOUNT — The Transmission Count field indicates the number of empty bytes available in the FIFO. This field is never larger than 8 for Endpoint 0.

TX_DONE — The Transmission Done bit indicates whether a packet has completed transmission. The TX_DONE bit is cleared when this register is read.
0 – No completion of packet transmission has occurred.
1 – A packet has completed transmission.

ACK_STAT — The Acknowledge Status bit indicates the status, as received from the host, of the ACK for the packet previously sent. This bit is to be interpreted when TX_DONE is set. It is set when an ACK is received; otherwise, it remains cleared. This bit is cleared when this register is read.
0 – No ACK received.
1 – ACK received.

18.3.26 Transmit Command 0 Register (TXC0)

The TXC0 register controls the mandatory Endpoint 0 when used in transmit direction. This register allows read/write access from the CPU bus. It is clear after reset. Reading reserved bits returns undefined data.

7		5	4	3	2	1	0
Reserved			IGN_IN	FLUSH	TOGGLE	Res.	TX_EN

TX_EN — The Transmission Enable bit enables data transmission from the FIFO. It is cleared by hardware after transmitting a single packet, or a STALL handshake, in response to an IN token. It must be set by software to start packet transmission. The RX_EN bit in the Receive Command 0 (RXC0) register takes precedence over this bit; that is, if the RX_EN bit is set, the TX_EN bit is ignored until RX_EN is reset. Zero length packets are indicated by setting this bit without writing any data to the FIFO.
0 – Transmission from the FIFO disabled.
1 – Transmission from the FIFO enabled.

TOGGLE — The Toggle bit specifies the PID used when transmitting the packet. A value of 0 causes a DATA0 PID to be generated, while a value of 1 causes a DATA1 PID to be generated. This bit is not altered by the hardware.
0 – DATA0 PID is used.
1 – DATA1 PID is used.

FLUSH — Writing a 1 to the Flush FIFO bit flushes all data from the control endpoint FIFOs, resets the endpoint to Idle state, clears the FIFO read and write pointer, and then clears itself. If the endpoint is currently using the FIFO0 to transfer data on USB, flushing is delayed until after the transfer is complete. The FLUSH bit is cleared on reset. It is equivalent to the FLUSH bit in the RXC0 register.
0 – Writing 0 has no effect.
1 – Writing 1 flushed the FIFOs.

IGN_IN — When the Ignore IN Tokens bit is set, the endpoint will ignore any IN tokens directed to its configured address.
0 – Do not ignore IN tokens.
1 – Ignore IN tokens.

Copyright © 2007–2013, Texas Instruments Incorporated

18.3.27 Transmit Data 0 Register (TXD0)

Data written to the TXD0 register is copied into the FIFO of Endpoint 0 at the current location of the transmit write pointer. The register allows write-only access from the CPU bus.

7							0
TXFD							

TXFD	The Transmit FIFO Data Byte is used to load the transmit FIFO. Software is expected to write only the packet payload data. The PID and CRC16 are created automatically.

18.3.28 Receive Status 0 Register (RXS0)

The RXS0 register indicates status conditions for the bidirectional Control Endpoint 0. To receive a SETUP packet after receiving a zero length OUT/SETUP packet, there are two copies of this register in hardware. One holds the receive status of a zero length packet, and another holds the status of the next SETUP packet with data. If a zero length packet is followed by a SETUP packet, the first read of this register indicates the status of the zero length packet (with RX_LAST set and RCOUNT clear), and the second read indicates the status of the SETUP packet. This register provides read-only access from the CPU bus. After reset it is clear.

7	6	5	4	3			0
Res.	SETUP	TOGGLE	RX_LAST	RCOUNT			

RCOUNT	The Receive Count field reports the number of bytes presently in the RX FIFO. This number is never larger than 8 for Endpoint 0.
RX_LAST	The Receive Last Bytes bit indicates that an ACK was sent on completion of a successful receive operation. This bit is unchanged for zero-length packets. It is cleared when this register is read. 0 – No ACK was sent. 1 – An ACK was sent.
TOGGLE	The Toggle bit reports the PID used when receiving the packet. When clear, this bit indicates that the last successfully received packet had a DATA0 PID. When set, this bit indicates that the packet had a DATA1 PID. This bit is unchanged for zero-length packets. It is cleared when this register is read. 0 – DATA0 PID was used. 1 – DATA1 PID was used.
SETUP	The Setup bit indicates that the setup packet has been received. This bit is unchanged for zero-length packets. It is cleared when this register is read. 0 – Setup packet has not been received. 1 – Setup packet has been received.

Copyright © 2007–2013, Texas Instruments Incorporated

18.3.29 Receive Command 0 Register (RXC0)

The RXC0 register controls the mandatory Endpoint 0 when used in receive direction. This register provides read/write access from the CPU bus. It is clear after reset.

7 – 4	3	2	1	0
Reserved	FLUSH	IGN_SETUP	IGN_OUT	RX_EN

RX_EN	The Receive Enable bit enables receiving packets. OUT packet reception is disabled after every data packet is received, or when a STALL handshake is returned in response to an OUT token. The RX_EN bit must be set to re-enable data reception. Reception of SETUP packets is always enabled. In the case of back-to-back SETUP packets (for a given endpoint) where a valid SETUP packet is received with no other intervening non-SETUP tokens, the Endpoint Controller discards the new SETUP packet and returns an ACK handshake. If any other reasons prevent the End- point Controller from accepting the SETUP packet, it must not generate a handshake. This allows recovery from a condition where the ACK of the first SETUP token was lost by the host. 0 – Receive disabled. 1 – Receive enabled.
IGN_OUT	The Ignore OUT Tokens bit controls whether OUT tokens are ignored. When this bit is set, the endpoint ignores any OUT tokens directed to its configured address. 0 – Do not ignore OUT tokens. 1 – Ignore OUT tokens.
IGN_SETUP	The Ignore SETUP Tokens bit controls whether SETUP tokens are ignored. When this bit is set, the endpoint ignores any SETUP tokens directed to its configured address. 0 – Do not ignore SETUP tokens. 1 – Ignore SETUP tokens.
FLUSH	Writing 1 to the Flush bit flushes all data from the control endpoint FIFOs, resets the endpoint to Idle state, clears the FIFO read and write pointer, and then clears itself. If the endpoint is currently using FIFO0 to transfer data on USB, flushing is delayed until after the transfer is done. This bit is cleared on reset. This bit is equivalent to FLUSH in the TXC0 register. 0 – Writing 0 has no effect. 1 – Writing 1 flushes the FIFOs.

18.3.30 Receive Data 0 Register (RXD0)

Reading the RXD0 register returns the data located at the current position of the receive read pointer of the Endpoint 0 FIFO. The register allows read-only access from the CPU bus. After reset, reading this register returns undefined data.

7 – 0
RXFD7:0

RXFD	The Receive FIFO Data Byte is used to unload the FIFO. Software should expect to read only the packet payload data. The PID and CRC16 are removed from the incoming data stream automatically.

18.3.31 Endpoint Control Register n (EPCn)

Each unidirectional endpoint has an EPCn register. The format of the EPCn registers is defined below. These registers provide read/write access from the CPU bus. After reset, the EPCn registers are clear.

7	6	5	4	3 … 0
STALL	Res.	ISO	EP_EN	EP

EP — The Endpoint Address field holds the endpoint address.

EP_EN — When the Endpoint Enable bit is set, the EP[3:0] field is used in address comparison, together with the AD[6:0] field in the FAR register. When clear, the endpoint does not respond to any token on the USB bus. (The AD_EN bit in the FAR register is the global address compare enable for the CR16 USB node. If it is clear, the device does not respond to any address, without regard to the EP_EN state.)
0 – Address comparison is disabled.
1 – If the AD_EN bit is also set, address comparison is enabled.

ISO — When the Isochronous bit is set, the endpoint is isochronous. This implies that no NAK is sent if the endpoint is not ready but enabled; that is, if an IN token is received and no data is available in the FIFO to transmit, or if an OUT token is received and the FIFO is full since there is no USB handshake for isochronous transfers.
0 – Isochronous mode disabled.
1 – Isochronous mode enabled.

STALL — The Stall bit can be used to enable STALL handshakes under the following conditions:

- The transmit FIFO is enabled and an IN token is received.
- The receive FIFO is enabled and an OUT token is received.
- A SETUP token does not cause a STALL handshake to be generated when this bit is set.

0 – Disable STALL handshakes.
1 – Enable STALL handshakes.

18.3.32 Transmit Status Register n (TXSn)

Each of the three transmit endpoints has a TXSn register. The format of the TXSn registers is given below. The registers provide read-only access from the CPU bus. They are loaded with 1Fh at reset.

7	6	5	4 … 0
TX_URN	ACK_STAT	TX_DONE	TCOUNT

TCOUNT — The Transmission Count field reports the number of empty bytes available in the FIFO. If this number is greater than 31, a value of 31 is reported.

TX_DONE — When set, the Transmission Done bit indicates that the endpoint responded to a USB packet. Three conditions can cause this bit to be set:

- A data packet completed transmission in response to an IN token with non-ISO operation.
- The endpoint sent a STALL handshake in response to an IN token.
- A scheduled ISO frame was transmitted or discarded.

This bit is cleared when this register is read.

ACK_STAT — The Acknowledge Status bit is valid when the TX_DONE bit is set. The meaning of the ACK_STAT bit differs depending on whether ISO or non-ISO operation is used (as selected by the ISO bit in the EPCn register).

- Non-Isochronous mode—This bit indicates the acknowledge status (from the host) about the ACK for the previously sent packet. This bit itself is set when an ACK is received; otherwise, it is clear.
- Isochronous mode—This bit is set if a frame number LSB match occurs (see Section Section 18.3.33), and data was sent in response to an IN token. Otherwise, this bit is cleared, the FIFO is flushed, and TX_DONE is set. The ACK_STAT bit is cleared when this register is read.

TX_URUN — The Transmit FIFO Underrun indicates whether the transmit FIFO became empty during a transmission, and no new data was written to the FIFO. If so, the Media Access Controller (MAC) forces a bit stuff error followed by an EOP. This bit is cleared when this register is read.
0 – No transmit FIFO underrun event occurred.
1 – Transmit FIFO underrun event occurred.

Copyright © 2007–2013, Texas Instruments Incorporated

18.3.33 Transmit Command Register n (TXCn)

Each of the transmit endpoints (1, 3, and 5) has a Transmit Command Register, TXCn. These registers provide read/ write access from the CPU bus. After reset the registers are clear.

7	6	5	4	3	2	1	0
IGN_ISOMSK	TFWL		RFF	FLUSH	TOGGLE	LAST	TX_EN

TX_EN — The Transmission Enable bit enables data transmission from the FIFO. It is cleared by hardware after transmitting a single packet or after a STALL handshake in response to an IN token. It must be set by software to start packet transmission.
0 – Transmission disabled.
1 – Transmission enabled.

LAST — The Last Byte bit indicates whether the entire packet has been written into the FIFO. This is used especially for streaming data to the FIFO while the actual transmission occurs. If the LAST bit is not set and the transmit FIFO becomes empty during a transmission, a stuff error followed by an EOP is forced on the bus. Zero length packets are indicated by setting this bit without writing any data to the FIFO. The transmit state machine transmits the payload data, CRC16, and the EOP signal before clearing this bit.
0 – Last byte of the packet has not been written to the FIFO.
1 – Last byte of the packet has been written to the FIFO.

TOGGLE — The function of the Toggle bit differs depending on whether ISO or non-ISO operation is used (as selected by the ISO bit in the EPCn register). • Non-Isochronous mode—The TOGGLE bit specifies the PID used when transmitting the packet. A value of 0 causes a DATA0 PID to be generated, while a value of 1 causes a DATA1 PID to be generated.

- Isochronous mode—The TOGGLE bit and the LSB of the frame counter (FNL0) act as a mask for the TX_EN bit to allow prequeueing of packets to specific frame numbers. (that is, transmission is enabled only if bit 0 in the FNL register is set to TOGGLE.) If an IN token is not received while this condition is true, the contents of the FIFO are flushed with the next SOF. If the endpoint is set to ISO, data is always transferred with a DATA0 PID.

FLUSH — Writing 1 to the Flush bit flushes all data from the corresponding transmit FIFO, resets the endpoint to Idle state, and clears both the FIFO read and write pointers. If the MAC is currently using the FIFO to transmit, data is flushed after the transmission is complete. After data flushing, this bit is cleared by hardware.
0 – Writing 0 has no effect.
1 – Writing 1 flushes the FIFO.

RFF — The Refill FIFO bit is used to repeat a transmission for which no ACK was received. Setting the LAST bit to 1 automatically saves the Transmit Read Pointer (TXRP) to a buffer. When the RFF bit is set, the buffered TXRP is reloaded into the TXRP. This allows software to repeat the last transaction if no ACK was received from the host. If the MAC is currently using the FIFO to transmit, TXRP is reloaded only after the transmission is complete. After reload, this bit is cleared by hardware.
0 – No action.
1 – Reload the saved TXRP.

TFWL — The Transmit FIFO Warning Limit bits specify how many more bytes can be transmitted from the respective FIFO before an underrun condition occurs. If the number of bytes remaining in the FIFO is equal to or less than the selected warning limit, the TXWARN bit in the FWEV register is set. To avoid interrupts caused by setting this bit while the FIFO is being filled before a transmission begins, TXWARN is only set when transmission from the endpoint is enabled (TX_ENn in the TXCn register is set). See Table 18-6.

IGN_ISOMSK — The Ignore ISO Mask bit has an effect only if the endpoint is set to be isochronous. If set, this bit disables locking of specific frame numbers with the alternate function of the TOGGLE bit. Therefore, data is transmitted upon reception of the next IN token. If clear, data is only transmitted when FNL0 matches TOGGLE. This bit is cleared after reset.
0 – Data transmitted only when FNL0 matches TOGGLE.
1 – Locking of frame numbers disabled.

Table 18-6. Transmit FIFO Warning Limit

TFWL	Bytes Remaining in FIFO
00	TFWL disabled
01	≤ 4
10	≤ 8
11	≤ 16

18.3.34 Transmit Data Register n (TXDn)

Each transmit FIFO has one TXDn register. Data written to the TXDn register is loaded into the transmit FIFO n at the current location of the transmit write pointer. The TXDn registers provide write-only access from the CPU bus.

7							0
TXFD							

TXFD	The Transmit FIFO Data Byte is used to load the transmit FIFO. Software is expected to write only the packet payload data. The PID and CRC16 are inserted automatically in the transmit data stream.

18.3.35 Receive Status Register n (RXSn)

Each receive endpoint pipe (2, 4, and 6) has one RXSn register with the bits defined below. To allow a SETUP packet to be received after a zero length OUT packet is received, hardware contains two copies of this register. One holds the receive status of a zero length packet, and another holds the status of the next SETUP packet with data. If a zero length packet is followed by a SETUP packet, the first read of this register indicates the zero-length packet status, and the second read, the SETUP packet status. This register provides read-only access from the CPU bus. After reset it is clear.

7	6	5	4	3			0
RX_ERR	SETUP	TOGGLE	RX_LAST	RCOUNT			

RCOUNT	The Receive Counter holds the number of bytes presently in the endpoint receive FIFO. If this number is greater than 15, a value of 15 is actually reported.
RX_LAST	The Receive Last Bytes bit indicates that an ACK was sent on completion of a successful receive operation. This bit is cleared when this register is read. 0 – No ACK was sent. 1 – An ACK was sent.
TOGGLE	The function of the Toggle bit differs depending on whether ISO or non-ISO operation is used (as controlled by the ISO bit in the EPCn register). • Non-Isochronous mode—A value of 0 indicates that the last successfully received packet had a DATA0 PID, while a value of 1 indicates that this packet had a DATA1 PID. • Non-Isochronous mode—This bit reflects the LSB of the frame number (FNL0) after a packet was successfully received for this endpoint. This bit is cleared by reading the RXSn register.
SETUP	The Setup bit indicates that the setup packet has been received. This bit is cleared when this register is read. 0 – Setup packet has not been received. 1 – Setup packet has been received.
RX_ERR	The Receive Error indicates a media error, such as bit-stuffing or CRC. If this bit is set, software must flush the respective FIFO. 0 – No receive error occurred. 1 – Receive error occurred.

Copyright © 2007–2013, Texas Instruments Incorporated

18.3.36 Receive Command Register n (RXCn)

Each of the receive endpoints (2, 4, and 6) has one RXCn register. The registers provide read/write access from the CPU bus. Reading reserved bits returns undefined data. After reset, it is clear.

7	6	5	4	3	2	1	0
Res.	RFWL		Res.	FLUSH	IGN_SETUP	Res.	RX_EN

The Receive Enable bit enables receiving packets. OUT packet reception is disabled after every data packet is received, or when a STALL handshake is returned in response to an OUT token. The RX_EN bit must be set to re-enable data reception. Reception of SETUP packets is always enabled. In the case of back-to-back SETUP packets (for a given endpoint) where a valid SETUP packet is received with no other intervening non-SETUP tokens, the Endpoint Controller discards the new SETUP packet and returns an ACK handshake. If any other reasons prevent the Endpoint Controller from accepting the SETUP packet, it must not generate a handshake.
0 – Receive disabled.
1 – Receive enabled.

The Ignore SETUP Tokens bit controls whether SETUP tokens are ignored. When this bit is set, the endpoint ignores any SETUP tokens directed to its configured address.
0 – Do not ignore SETUP tokens.
1 – Ignore SETUP tokens.

Writing 1 to the Flush bit flushes all data from the corresponding receive FIFO, resets the endpoint to Idle state, and clears the FIFO read and write pointers. If the endpoint is currently using FIFO to receive data, flushing is delayed until after the transfer is complete.
0 – Writing 0 has no effect.
1 – Writing 1 flushes the FIFOs.

The Receive FIFO Warning Limit field specifies how many more bytes can be received to the respective FIFO before an overrun condition occurs. If the number of empty bytes remaining in the FIFO is equal to or less than the selected warning limit, the RXWARN bit in the FWEV register is set.

18.3.37 Receive Data Register n (RXD)

Each of the three Receive Endpoint FIFOs has one RXD register. Reading the Receive Data register n returns the data located in the receive FIFO n at the current position of the receive read pointer. These registers provide read-only access from the CPU bus.

7							0
RXFD							

RXFD — The Receive FIFO Data Byte is used to read the receive FIFO. Software should expect to read only the packet payload data. The PID and CRC16 are terminated by the receive state machine.

18.4 TRANSCEIVER INTERFACE

Separate UVCC and UGND pins are provided for the USB transceiver, so it can be powered at the standard USB voltage of 3.3V while the other parts of the device run at other voltages. The USB transceiver is powered by the system, not the USB cable, so these pins must be connected to a power supply and the system ground.

The on-chip USB transceiver does not have enough impedance to meet the USB specification requirement, so external 22-ohm resistors are required in series with the D+ and D-pins, as shown in Figure 18-5.

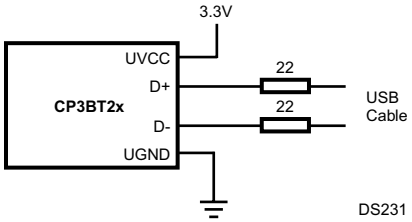

Figure 18-5. USB Transceiver Interface

19 CAN MODULE

The CAN module contains a Full CAN class, CAN (Controller Area Network) serial bus interface for low/high speed applications. It supports reception and transmission of extended frames with a 29-bit identifier, standard frames with an 11-bit identifier, applications that require high speed (up to 1 MBit/s), and a low-speed CAN interface with CAN master capability. Data transfer between the CAN bus and the CPU is handled by 15 message buffers, which can be individually configured as receive or transmit buffers. Every message buffer includes a status/control register which provides information about its current status and capabilities to configure the buffer. All message buffers are able to generate an interrupt on the reception of a valid frame or the successful transmission of a frame. In addition, an interrupt can be generated on bus errors.

An incoming message is only accepted if the message identifier passes one of two acceptance filtering masks. The filtering mask can be configured to receive a single message ID for each buffer or a group of IDs for each receive buffer. One of the buffers uses a separate message filtering procedure. This provides the capability to establish a BASIC-CAN path. Remote transmission requests can be processed automatically by automatic reconfiguration to a receiver after transmission or by automated transmit scheduling upon reception. A priority decoder allows any buffer to have one of 16 transmit priorities including the highest or lowest absolute priority, for a total of 240 different transmit priorities.

A decided bit time counter (16-bit wide) is provided to support real time applications. The contents of this counter are captured into the message buffer RAM on reception or transmission. The counter can be synchronized through the CAN network. This synchronization feature allows a reset of the counter after the reception or transmission of a message in buffer 0.

The CAN module is a fast CPU bus peripheral which allows single-cycle byte or word read/write access. The CPU controls the CAN module by programming the registers in the CAN register block. This includes initialization of the CAN baud rate, logic level of the CAN pins, and enable/disable of the CAN module. A set of diagnostic features, such as loop-back, listen only, and error identification, support development with the CAN module and provide a sophisticated error management tool.

The CAN module implements the following features:

- CAN specification 2.0B
  - Standard data and remote frames
  - Extended data and remote frames
  - 0 to 8 bytes data length
  - Programmable bit rate up to 1 Mbit/s
- 15 message buffers, each configurable as receive or transmit buffers
  - Message buffers are 16-bit wide dual-port RAM
  - One buffer may be used as a BASIC-CAN path
- Automatic transmission after reception of a Remote Transmission Request (RTR)
- Auto receive after transmission of a RTR
- Acceptance filtering
  - Two filtering capabilities: global acceptance mask and individual buffer identifiers
  - One of the buffers uses an independent acceptance filtering procedure
- Programmable transmit priority
- Interrupt capability
  - One interrupt vector for all message buffers (receive/ transmit/error)
  - Each interrupt source can be enabled/disabled
- 16-bit counter with time stamp capability on successful reception or transmission of a message
- Power Save capabilities with programmable Wake-Up over the CAN bus (alternate source for the Multi-Input Wake-Up module)
- Push-pull capability of the input/output pins

Copyright © 2007–2013, Texas Instruments Incorporated

- Diagnostic functions
- Error identification
- Loopback and listen-only features for test and initialization purposes

19.1 FUNCTIONAL DESCRIPTION

As shown in Figure 19-1, the CAN module consists of three blocks: the CAN core, interface management, and a dual-ported RAM containing the message buffers.

There are two dedicated device pins for the CAN interface, CANTX as the transmit output and CANRX as the receive input.

The CAN core implements the basic CAN protocol features such as bit-stuffing, CRC calculation/checking, and error management. It controls the transceiver logic and creates error signals according to the bus rules. In addition, it converts the data stream from the CPU (parallel data) to the serial CAN bus data.

The interface management block is divided into the register block and the interface management processor. The register block provides the CAN interface with control information from the CPU and provides the CPU with status information from the CAN module. Additionally, it generates the interrupt to the CPU.

The interface management processor is a state machine executing the CPU's transmission and reception commands and controlling the data transfer between several message buffers and the RX/TX shift registers.

15 message buffers are memory mapped into RAM to transmit and receive data through the CAN bus. Eight 16-bit registers belong to each buffer. One of the registers contains control and status information about the message buffer configuration and the current state of the buffer. The other registers are used for the message identifier, a maximum of up to eight data bytes, and the time stamp information. During the receive process, the incoming message will be stored in a hidden receive buffer until the message is valid. Then, the buffer contents will be copied into the first message buffer which accepts the ID of the received message.

Copyright © 2007–2013, Texas Instruments Incorporated

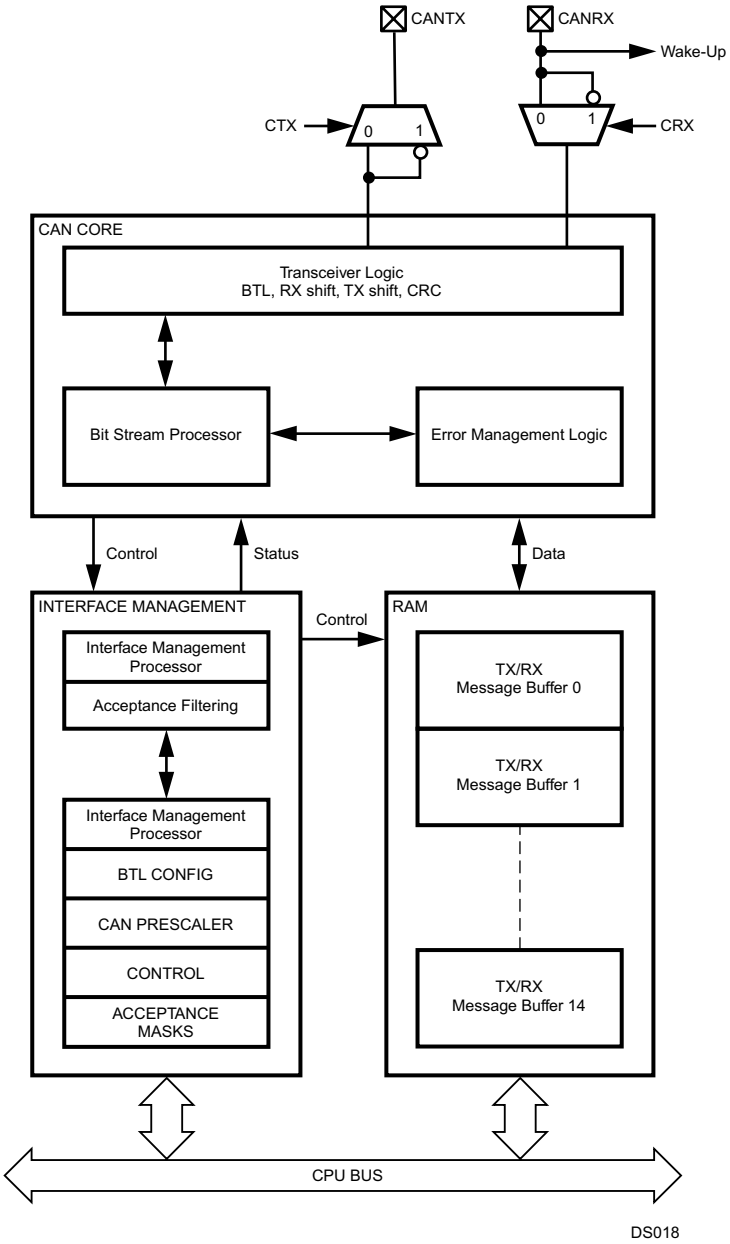

Figure 19-1. CAN Block Diagram

Copyright © 2007–2013, Texas Instruments Incorporated

19.2 BASIC CAN CONCEPTS

This section provides a generic overview of the basic concepts of the Controller Area Network (CAN).

The CAN protocol is a message-based protocol that allows a total of 2032 (2^{11} - 16) different messages in the standard format and 512 million (2^{29} - 16) different messages in the extended frame format.

Every CAN Frame is broadcast on the common bus. Each module receives every frame and filters out the frames which are not required for the module's task. For example, if a dashboard sends a request to switch on headlights, the CAN module responsible for brake lights must not process this message.

A CAN master module has the ability to set a specific bit called the “remote data request bit” (RTR) in a frame. Such a message is also called a “Remote Frame”. It causes another module, either another master or a slave which accepts this remote frame, to transmit a data frame after the remote frame has been completed.

Additional modules can be added to an existing network without a configuration change. These modules can either perform completely new functions requiring new data, or process existing data to perform a new functionality.

As the CAN network is message oriented, a message can be used as a variable which is automatically updated by the controlling processor. If any module cannot process information, it can send an overload frame.

The CAN protocol allows several transmitting modules to start a transmission at the same time as soon as they detect the bus is idle. During the start of transmission, every node monitors the bus line to detect whether its message is overwritten by a message with a higher priority. As soon as a transmitting module detects another module with a higher priority accessing the bus, it stops transmitting its own frame and switches to receive mode, as shown in Figure 19-2.

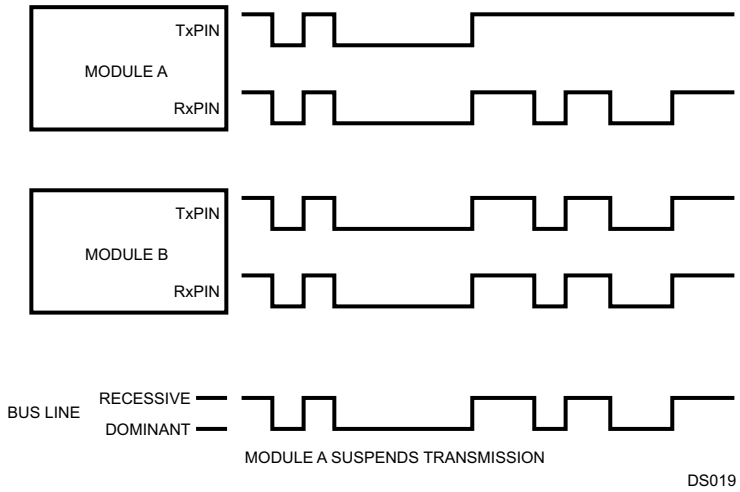

Figure 19-2. CAN Message Arbitration

If a data or remote frame loses arbitration on the bus due to a higher-prioritized data or remote frame, or if it is destroyed by an error frame, the transmitting module will automatically retransmit it until the transmission is successful or software has canceled the transmit request.

If a transmitted message loses arbitration, the CAN module will restart transmission at the next possible time with the message which has the highest internal transmit priority.

19.2.1 CAN Frame Types

Communication via the CAN bus is basically established by means of four different frame types:

- Data Frame
- Remote Frame
- Error Frame
- Overload Frame

Data and remote frames can be used in both standard and extended frame format. If no message is being transmitted, that is., the bus is idle, the bus is kept at the “recessive” level.

Remote and data frames are non-return to zero (NRZ) coded with bit-stuffing in every bit field, which holds computable information for the interface, that is, start of frame, arbitration field, control field, data field (if present), and CRC field.

Error and overload frames are also NRZ coded, but without bit-stuffing.

After five consecutive bits of the same value (including inserted stuff bits), a stuff bit of the inverted value is inserted into the bit stream by the transmitter and deleted by the receiver. The following shows the stuffed and destuffed bit stream for consecutive ones and zeros.

Original or unstuffed bit stream	10000011111 . . .	01111100000 . . .
Stuffed bit stream (stuff bits in bold)	1000001111101 . . .	0111110000010 . . .

19.2.2 CAN Frame Fields

Data and remote frames consist of the following bit fields:

- Start of Frame (SOF)
- Arbitration Field
- Control Field
- Data Field
- CRC Field
- ACK Field
- EOF Field

Start of Frame (SOF)

The Start of Frame (SOF) indicates the beginning of data and remote frames. It consists of a single “dominant” bit. A node is only allowed to start transmission when the bus is idle. All nodes have to synchronize to the leading edge (first edge after the bus was idle) caused by the SOF of the node which starts transmission first.

Arbitration Field

The Arbitration field consists of the identifier field and the RTR (Remote Transmission Request) bit. For extended frames there is also a SRR (Substitute Remote Request) and a IDE (ID Extension) bit inserted between ID18 and ID17 of the identifier field. The value of the RTR bit is “dominant” in a data frame and “recessive” in a remote frame.

Control Field

The Control field consists of six bits. For standard frames it starts with the ID Extension bit (IDE) and a reserved bit (RB0). For extended frames, the control field starts with two reserved bits (RB1, RB0). These bits are followed by the 4- bit Data Length Code (DLC).

The CAN receiver accepts all possible combinations of the reserved bits (RB1, RB0). The transmitter must be configured to send only zeros.

Copyright © 2007–2013, Texas Instruments Incorporated

Data Length Code (DLC)

The DLC field indicates the number of bytes in the data field. It consists of four bits. The data field can be of length zero. The admissible number of data bytes for a data frame ranges from 0 to 8.

Data Field

The Data field consists of the data to be transferred within a data frame. It can contain 0 to 8 bytes. A remote frame has no data field.

Cyclic Redundancy Check (CRC)

The CRC field consists of the CRC sequence followed by the CRC delimiter. The CRC sequence is derived by the transmitter from the modulo 2 division of the preceding bit fields, starting with the SOF up to the end of the data field, excluding stuff-bits, by the generator polynomial:

$$X^{15}+X^{14}+X^{10}+X^{8}+X^{7}+X^{4}+X^{3}+1 \quad (13)$$

The remainder of this division is the CRC sequence transmitted over the bus. On the receiver side, the module divides all bit fields up to the CRC delimiter excluding stuff bits, and checks if the result is zero. This will then be interpreted as a valid CRC. After the CRC sequence a single “recessive” bit is transmitted as the CRC delimiter.

ACK Field

The ACK field is two bits long and contains the ACK slot and the ACK delimiter. The ACK slot is filled with a “recessive” bit by the transmitter. This bit is overwritten with a “dominant” bit by every receiver that has received a correct CRC sequence. The second bit of the ACK field is a “recessive” bit called the acknowledge delimiter.

The End of Frame field closes a data and a remote frame. It consists of seven “recessive” bits.

19.2.3 CAN Frame Formats

Data Frame

The structure of a standard data frame is shown in Figure 19-3. The structure of an extended data frame is shown in Figure 19-4.

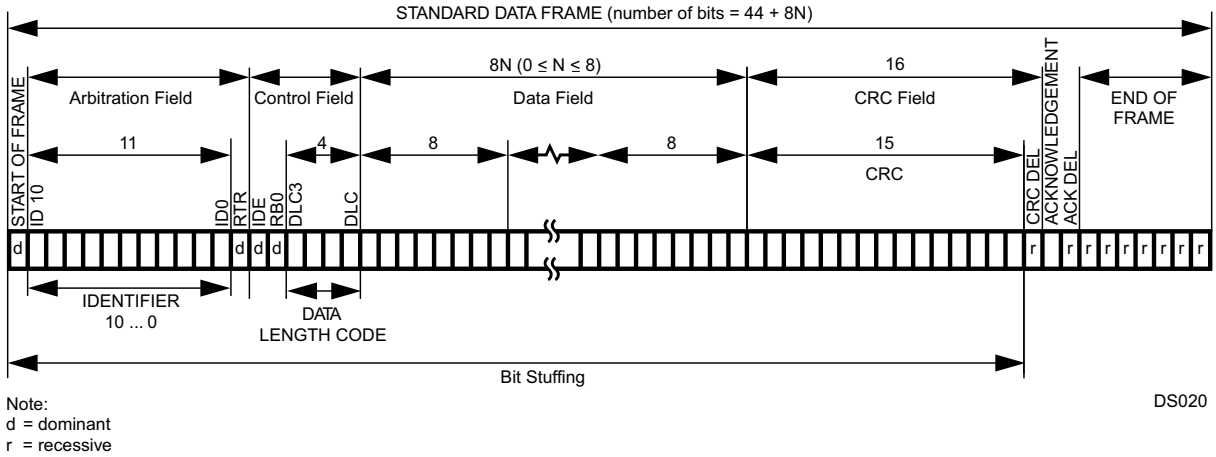

Figure 19-3. Standard Data Frame

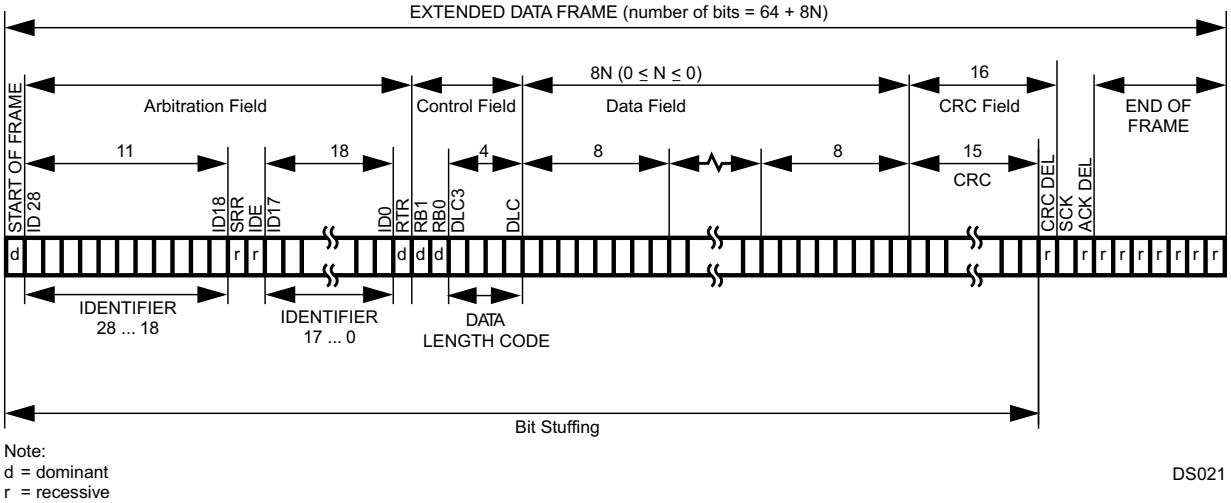

Figure 19-4. Extended Data Frame

A CAN data frame consists of the following fields:

- Start of Frame (SOF)
- Arbitration Field + Extended Arbitration
- Control Field
- Data Field
- Cyclic Redundancy Check Field (CRC)
- Acknowledgment Field (ACK)
- End of Frame (EOF)

Copyright © 2007–2013, Texas Instruments Incorporated

Remote Frame

Figure 19-5 shows the structure of a standard remote frame.

Figure 19-6 shows the structure of an extended remote frame.

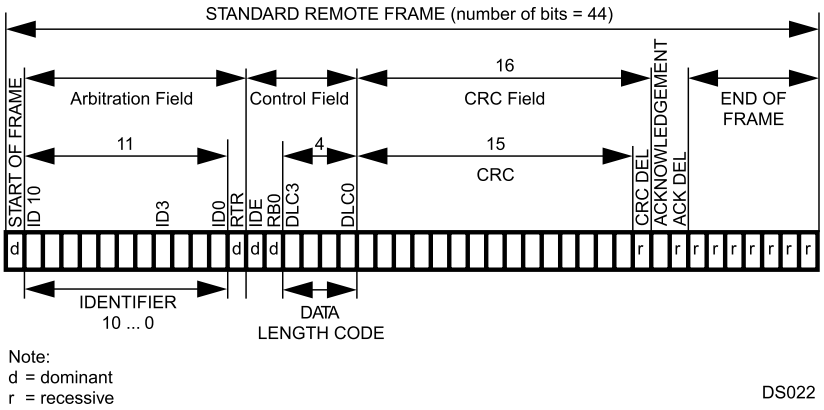

Figure 19-5. Standard Remote Frame

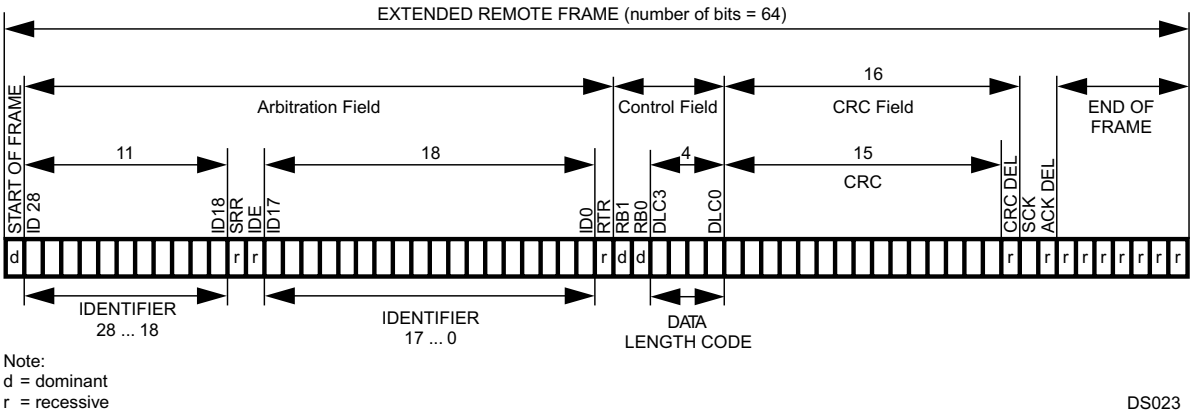

Figure 19-6. Extended Remote Frame

A remote frame is comprised of the following fields, which is the same as a data frame (see CAN Frame Fields) except for the data field, which is not present.

- Start of Frame (SOF)
- Arbitration Field + Extended Arbitration
- Control Field
- Cyclic Redundancy Check Field (CRC)
- Acknowledgment field (ACK)
- End of Frame (EOF)

Note that the DLC must have the same value as the corresponding data frame to prevent contention on the bus. The RTR bit is “recessive”.

Error Frame

As shown in Figure 19-9, the Error Frame consists of the error flag and the error delimiter bit fields. The error flag field is built up from the various error flags of the different nodes. Therefore, its length may vary from a minimum of six bits up to a maximum of twelve bits depending on when a module has detected the error. Whenever a bit error, stuff error, form error, or acknowledgment error is detected by a node, the node starts transmission of an error flag at the next bit. If a CRC error is detected, transmission of the error flag starts at the bit following the acknowledge delimiter, unless an error flag for a previous error condition has already been started.

If a device is in the error active state, it can send a “dominant” error flag, while a error passive device is only allowed to transmit “recessive” error flags. This is done to prevent the CAN bus from getting stuck due to a local defect. For the various CAN device states, please refer to Error Types .

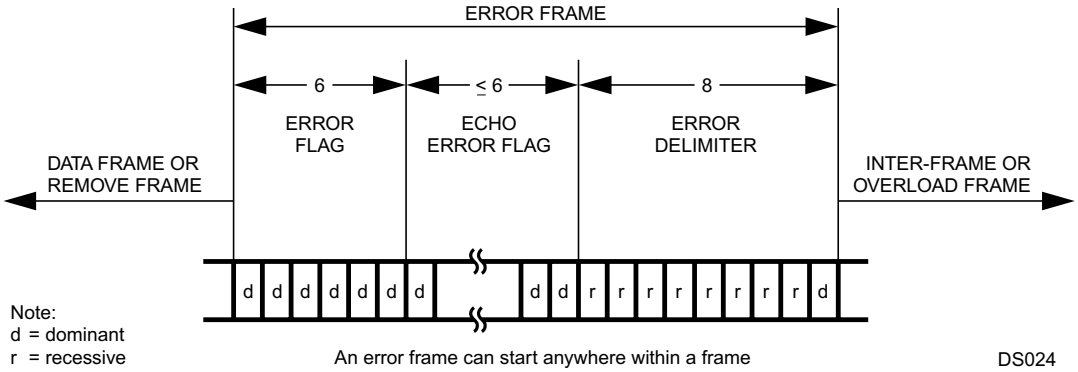

Figure 19-7. Error Frame

Overload Frame

As shown in Figure 19-8, an overload frame consists of the overload flag and the overload delimiter bit fields. The bit fields have the same length as the error frame field: six bits for the overload flag and eight bits for the delimiter. The overload frame can only be sent after the end of frame (EOF) field and in this way destroys the fixed form of the intermission field. As a result, all other nodes also detect an overload condition and start the transmission of an overload flag. After an overload flag has been transmitted, the overload frame is closed by the overload delimiter.

Note: The CAN module never initiates an overload frame due to its inability to process an incoming message. However, it is able to recognize and respond to overload frames initiated by other devices.

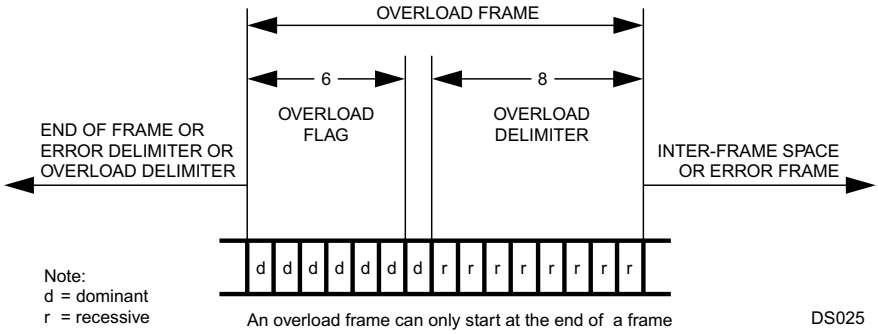

Figure 19-8. Overload Frame

Copyright © 2007–2013, Texas Instruments Incorporated

Interframe Space

Data and remote frames are separated from every preceding frame (data, remote, error and overload frames) by the interframe space (see Figure 19-9). Error and overload frames are not preceded by an interframe space; they can be transmitted as soon as the condition occurs. The interframe space consists of a minimum of three bit fields depending on the error state of the node.

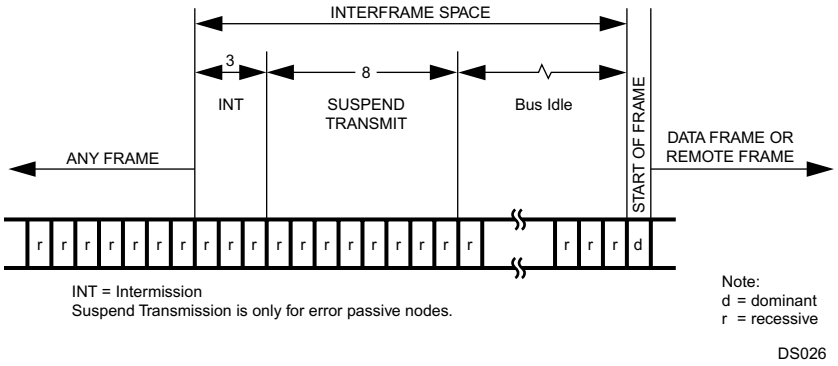

Figure 19-9. Interframe Space

19.2.4 Error Types

Bit Error

A CAN device which is currently transmitting also monitors the bus. If the monitored bit value is different from the transmitted bit value, a bit error is detected. However, the reception of a “dominant” bit instead of a “recessive” bit during the transmission of a passive error flag, during the stuffed bit stream of the arbitration field, or during the acknowledge slot is not interpreted as a bit error.

Stuff Error

A stuff error is detected if 6 consecutive bits occur without a state change in a message field encoded with bit stuffing.

Form Error

A form error is detected, if a fixed frame bit (for example, CRC delimiter, ACK delimiter) does not have the specified value. For a receiver, a “dominant” bit during the last bit of End of Frame does not constitute a frame error.

Bit CRC Error

For Bit CRC Error A CRC error is detected if the remainder from the CRC calculation of a received CRC polynomial is non-zero.

Acknowledgment Error

An acknowledgment error is detected whenever a transmitting node does not get an acknowledgment from any other node (that is, when the transmitter does not receive a “dominant” bit during the ACK frame).

Error States

The device can be in one of five states with respect to error handling (see Figure 19-10).

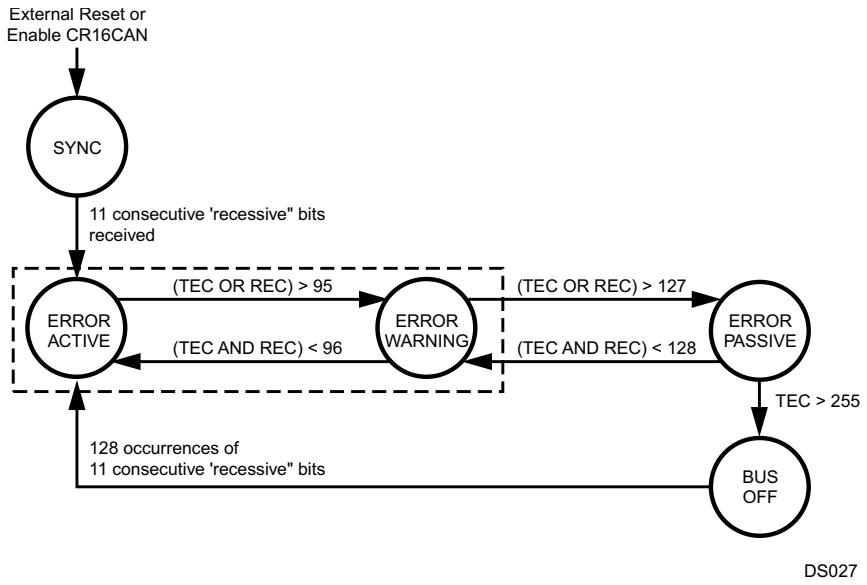

Figure 19-10. Bus States

Synchronize

Once the CAN module is enabled, it waits for 11 consecutive recessive bits to synchronize with the bus. After that, the CAN module becomes error active and can participate in the bus communication. This state must also be entered after waking-up the device using the Multi-Input Wake-Up feature. See System Start-Up and Multi-Input Wake-Up.

After system start-up, all CAN-related registers are in their reset state. The CAN module can be enabled after all configuration registers are set to their desired value. The following initial settings must be made:

Error Active

An error active unit can participate in bus communication and may send an active (“dominant”) error flag.

Error Warning

The Error Warning state is a sub-state of Error Active to indicate a heavily disturbed bus. The CAN module behaves as in Error Active mode. The device is reset into the Error Active mode if the value of both counters is less than 96.

Error Passive

An error passive unit can participate in bus communication. However, if the unit detects an error it is not allowed to send an active error flag. The unit sends only a passive (“recessive”) error flag. A device is error passive when the transmit error counter or the receive error counter is greater than 127. A device becoming error passive will send an active error flag. An error passive device becomes error active again when both transmit and receive error counter are less than 128.

Bus Off

A unit that is bus off has the output drivers disabled, that is, it does not participate in any bus activity. A device is bus off when the transmit error counter is greater than 255. A bus off device will become error active again after monitoring 128 × 11 “recessive” bits (including bus idle) on the bus. When the device goes from “bus off“ to “error active“, both error counters will have a value of 0.

Copyright © 2007–2013, Texas Instruments Incorporated

19.2.5 Error Counters

There are multiple mechanisms in the CAN protocol to detect errors and inhibit erroneous modules from disabling all bus activities. Each CAN module includes two error counters to perform error management. The receive error counter (REC) and the transmit error counter (TEC) are 8- bits wide, located in the 16-bit wide CANEC register. The counters are modified by the CAN module according to the rules listed in Table 19-1. This table provides an overview of the CAN error conditions and the behavior of the CAN module; for a detailed description of the error management and fault confinement rules, refer to the CAN Specification 2.0B.

If the MSB (bit 7) of the REC is set, the node is error passive and the REC will not increment any further.

The Error counters can be read by application software as described under CAN Error Counter Register (CANEC).

Table 19-1. Error Counter Handling

Condition	Action
Receive Error Counter Conditions	
A receiver detects a bit error during sending an active error flag.	Increment by 8
A receiver detects a “dominant“ bit as the first bit after sending an error flag.	Increment by 8
After detecting the 14th consecutive “dominant“ bit following an active error flag or overload flag, or after detecting the 8th consecutive “dominant“ bit following a passive error flag. After each sequence of additional 8 consecutive “dominant” bits.	Increment by 8
Any other error condition (stuff, frame, CRC, ACK)	Increment by 1
A valid reception or transmission	Decrement by 1 unless counter is already 0
Transmit Error Counter Conditions	
A transmitter detects a bit error while sending an active error flag	Increment by 8
After detecting the 14th consecutive “dominant“ bit following an active error flag or overload flag or after detecting the 8th consecutive “dominant“ bit following a passive error flag. After each sequence of additional 8 consecutive ‘dominant’ bits.	Increment by 8
Any other error condition (stuff, frame, CRC, ACK)	Increment by 8
A valid reception or transmission	Decrement by 1 unless counter is already 0

Special error handling for the TEC counter is performed in the following situations:

- A stuff error occurs during arbitration, when a transmitted “recessive” stuff bit is received as a “dominant” bit. This does not lead to an increment of the TEC.
- An ACK-error occurs in an error passive device and no “dominant” bits are detected while sending the passive error flag. This does not lead to an increment of the TEC.
- If only one device is on the bus and this device transmits a message, it will get no acknowledgment. This will be detected as an error and the message will be repeated. When the device goes “error passive” and detects an acknowledge error, the TEC counter is not incremented. Therefore the device will not go from ”error passive” to the “bus off” state due to such a condition.

19.2.6 Bit Time Logic

In the Bit Time Logic (BTL), the CAN bus speed and the Synchronization Jump Width can be configured by software. The CAN module divides a nominal bit time into three time segments: synchronization segment, time segment 1 (TSEG1), and time segment 2 (TSEG2). Figure 19-11 shows the various elements of a CAN bit time.

CAN Bit Time

The number of time quanta in a CAN bit (CAN Bit Time) ranges between 4 and 25. The sample point is positioned between TSEG1 and TSEG2 and the transmission point is positioned at the end of TSEG2.

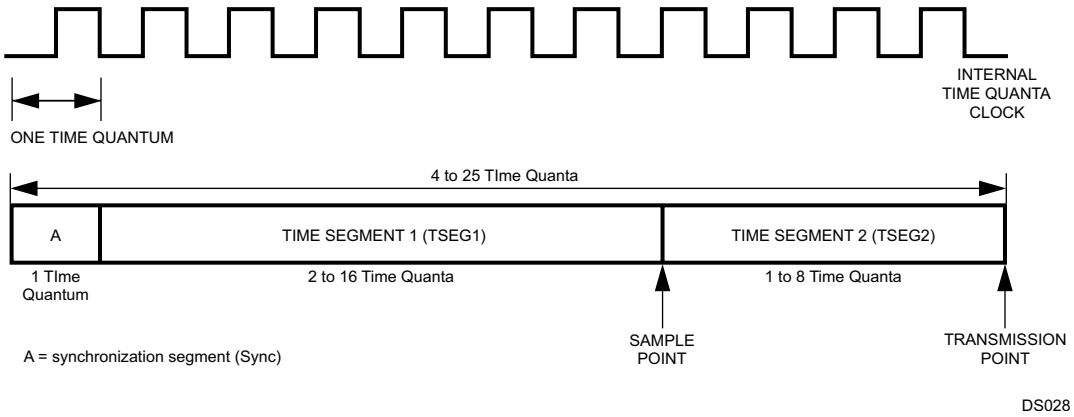

Figure 19-11. Bit Timing

TSEG1 includes the propagation segment and the phase segment 1 as specified in the CAN specification 2.0B. The length of the time segment 1 in time quanta (tq) is defined by the TSEG1[3:0] bits.

TSEG2 represents the phase segment 2 as specified in the CAN specification 2.0B. The length of time segment 2 in time quanta (tq) is defined by the TSEG2[3:0] bits.

The Synchronization Jump Width (SJW) defines the maximum number of time quanta (tq) by which a received CAN bit can be shortened or lengthened in order to achieve resynchronization on “recessive” to “dominant” data transitions on the bus. In the CAN implementation, the SJW must be configured less or equal to TSEG1 or TSEG2, whichever is smaller.

Synchronization

A CAN device expects the transition of the data signal to be within the synchronization segment of each CAN bit time. This segment has the fixed length of one time quantum.

However, two CAN nodes never operate at exactly the same clock rate, and the bus signal may deviate from the ideal waveform due to the physical conditions of the network (bus length and load). To compensate for the various delays within a network, the sample point can be positioned by programming the length of TSEG1 and TSEG2 (see Figure 19-11).

In addition, two types of synchronization are supported. The BTL logic compares the incoming edge of a CAN bit with the internal bit timing. The internal bit timing can be adapted by either hard or soft synchronization (resynchronization).

Hard synchronization is performed at the beginning of a new frame with the falling edge on the bus while the bus is idle. This is interpreted as the SOF. It restarts the internal logic.

Soft synchronization is performed during the reception of a bit stream to lengthen or shorten the internal bit time. Depending on the phase error (e), TSEG1 may be increased or TSEG2 may be decreased by a specific value, the resynchronization jump width (SJW).

Copyright © 2007–2013, Texas Instruments Incorporated

The phase error is given by the deviation of the edge to the SYNC segment, measured in CAN clocks. The value of the phase error is defined as:

$$e = 0, \text{ if the edge occurs within the SYNC segment} \quad (14)$$

$$e > 0, \text{ if the edge occurs within TSEG1} \quad (15)$$

$$e < 0, \text{ if the edge occurs within TSEG2 of the previous bit} \quad (16)$$

Resynchronization is performed according to the following rules:

- If the magnitude of e is less then or equal to the programmed value of SJW, resynchronization will have the same effect as hard synchronization.
- If e > SJW, TSEG1 will be lengthened by the value of the SJW (see Figure 19-12).
- If e <-SJW, TSEG2 will be shortened by the value SJW (see Figure 19-13).

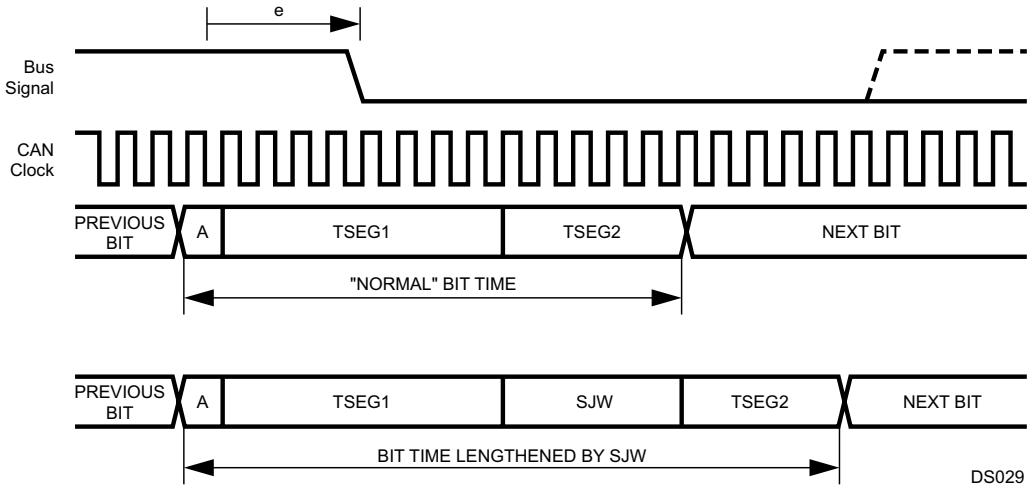

Figure 19-12. Resynchronization (e > SJW)

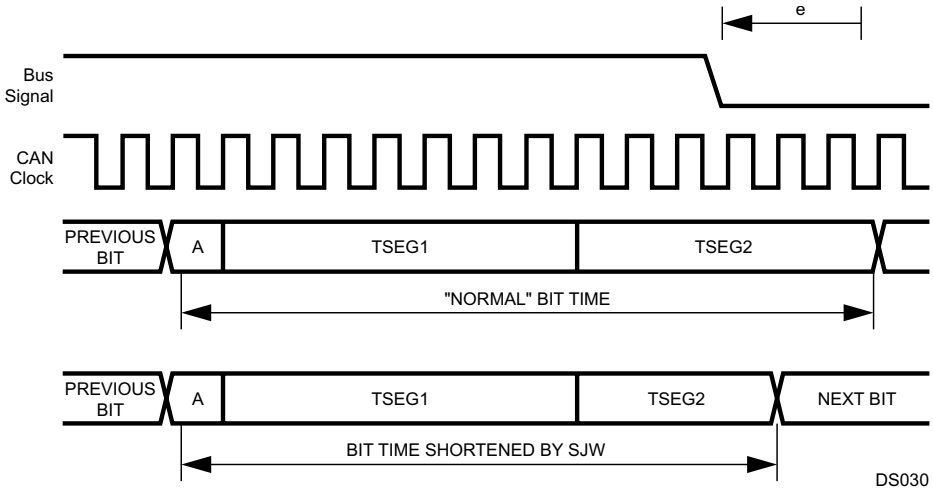

Figure 19-13. Resynchronization (e < - SJW)

19.2.7 Clock Generator

The CAN prescaler (PSC) is shown in Figure 19-14. It divides the CKI input clock by the value defined in the CTIM register. The resulting clock is called time quanta clock and defines the length of one time quantum (tq).

Please refer to CAN Timing Register for a detailed description of the CTIM register.

Note: PSC is the value of the clock prescaler. TSEG1 and TSEG2 are the length of time segment 1 and 2 in time quanta.

The resulting bus clock can be calculated by the equation:

busclock = CKI / (PSC)x(1+TSEG+TSEG2) (17)

The values of PSC, TSEG1, and TSEG2 are specified by the contents of the registers PSC, TSEG1, and TSEG2 as follows:

PSC = PSC[5:0] + 2 (18)

TSEG1 = TSEG1[3:0] + 1 (19)

TSEG2 = TSEG2[2:0] + 1 (20)

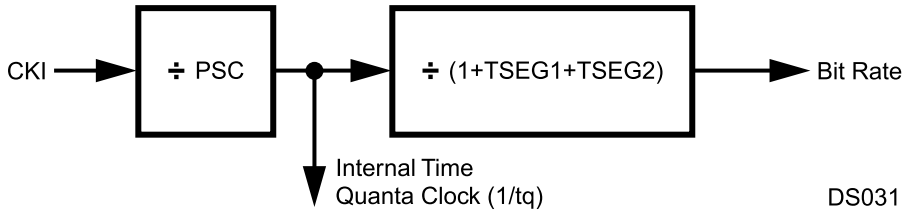

Figure 19-14. CAN Prescaler

19.3 MESSAGE TRANSFER

The CAN module has access to 15 independent message buffers, which are memory mapped in RAM. Each message buffer consists of 8 different 16-bit RAM locations and can be individually configured as a receive message buffer or as a transmit message buffer.

A dedicated acceptance filtering procedure enables software to configure each buffer to receive only a single message ID or a group of messages. One buffer uses an independent filtering procedure, which provides the possibility to establish a BASIC-CAN path.

For reception of data frame or remote frames, the CAN module follows a “receive on first match” rule which means that a given message is only received by one buffer: the first one which matches the received message ID.

The transmission of a frame can be initiated by software writing to the transmit status and priority register. An alternate way to schedule a transmission is the automatic answer to remote frames. In the latter case, the CAN module will schedule every buffer for transmission to respond to remote frames with a given identifier if the acceptance mask matches. This implies that a single remote frame is able to poll multiple matching buffers configured to respond to the triggering remote transmission request.

Copyright © 2007–2013, Texas Instruments Incorporated

19.4 ACCEPTANCE FILTERING

Two 32-bit masks are used to filter unwanted messages from the CAN bus: GMASK and BMASK. Figure 19-15 shows the mask and the buffers controlled by the masks.

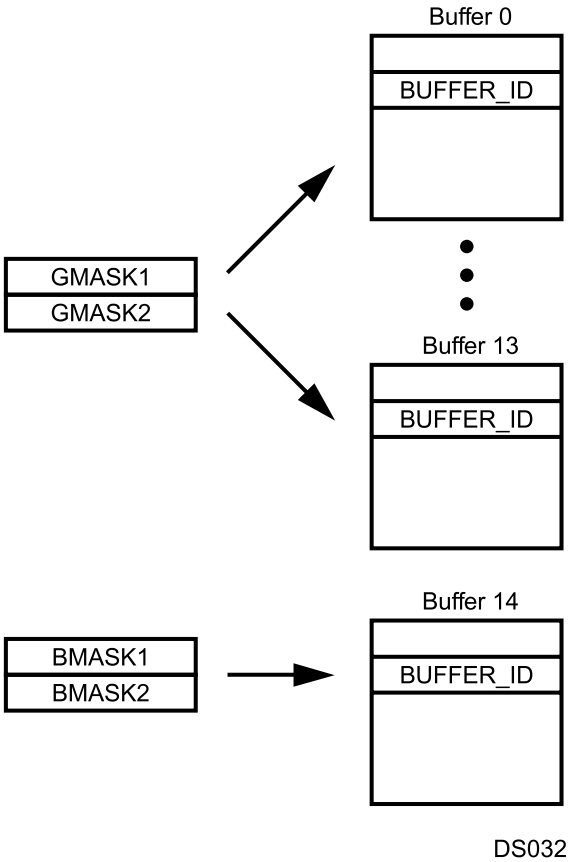

Figure 19-15. Acceptance Filtering

Acceptance filtering of the incoming messages for the buffers 0...13 is performed by means of a global filtering mask (GMASK) and by the buffer ID of each buffer. Acceptance filtering of incoming messages for buffer 14 is performed by a separate filtering mask (BMASK) and by the buffer ID of that buffer.

Once a received object is waiting in the hidden buffer to be copied into a buffer, the CAN module scans all buffers configured as receive buffers for a matching filtering mask. The buffers 0 to 13 are checked in ascending order beginning with buffer 0. The contents of the hidden buffer are copied into the first buffer with a matching filtering mask.

Bits holding a 1 in the global filtering mask (GMASK) can be represented as a “don’t care” of the associated bit of each buffer identifier, regardless of whether the buffer identifier bit is 1 or 0.

This provides the capability to accept only a single ID for each buffer or to accept a group of IDs. The following two examples illustrate the difference.

Example 1: Acceptance of a Single Identifier

If the global mask is loaded with 00h, the acceptance filtering of an incoming message is only determined by the individual buffer ID. This means that only one message ID is accepted for each buffer.

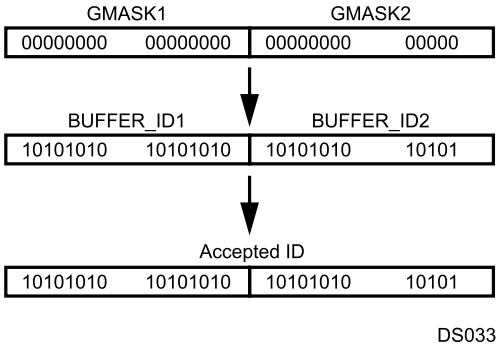

Figure 19-16. Acceptance of a Single Identifier

Example 2: Reception of an Identifier Group

Set bits in the global mask register change the corresponding bit status within the buffer ID to “don’t care” (X). Messages which match the non-“don’t care” bits (the bits corresponding to clear bits in the global mask register) are accepted.

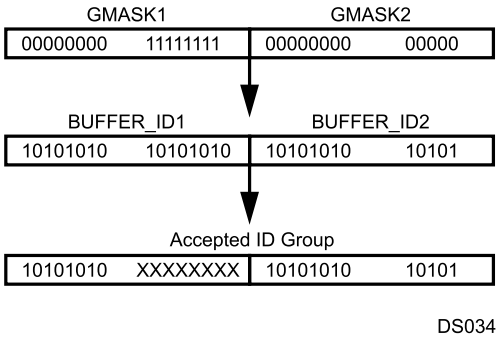

Figure 19-17. Acceptance of a Group of Identifiers

A separate filtering path is used for buffer 14. For this buffer, acceptance filtering is established by the buffer ID in conjunction with the basic filtering mask. This basic mask uses the same method as the global mask (set bits correspond to “don’t care” bits in the buffer ID).

Therefore, the basic mask allows a large number of infrequent messages to be received by this buffer.

Note: If the BMASK register is equal to the GMASK register, the buffer 14 can be used the same way as the buffers 0 to 13.

The buffers 0 to 13 are scanned prior to buffer 14. Subsequently, the buffer 14 will not be checked for a matching ID when one of the buffers 0 to 13 has already received an object.

Copyright © 2007–2013, Texas Instruments Incorporated

By setting the BUFFLOCK bit in the configuration register, the receiving buffer is automatically locked after reception of one valid frame. The buffer will be unlocked again after the CPU has read the data and has written RX_READY in the buffer status field. With this lock function, software has the capability to save several messages with the same identifier or same identifier group into more than one buffer. For example, a buffer with the second highest priority will receive a message if the buffer with the highest priority has already received a message and is now locked (provided that both buffers use the same acceptance filtering mask).

As shown in Figure 19-18, several messages with the same ID are received while BUFFLOCK is enabled. The filtering mask of the buffers 0, 1, 13, and 14 is set to accept this message. The first incoming frame will be received by buffer 0. Because buffer 0 is now locked, the next frame will be received by buffer 1, and so on. If all matching receive buffers are full and locked, a further incoming message will not be received by any buffer.

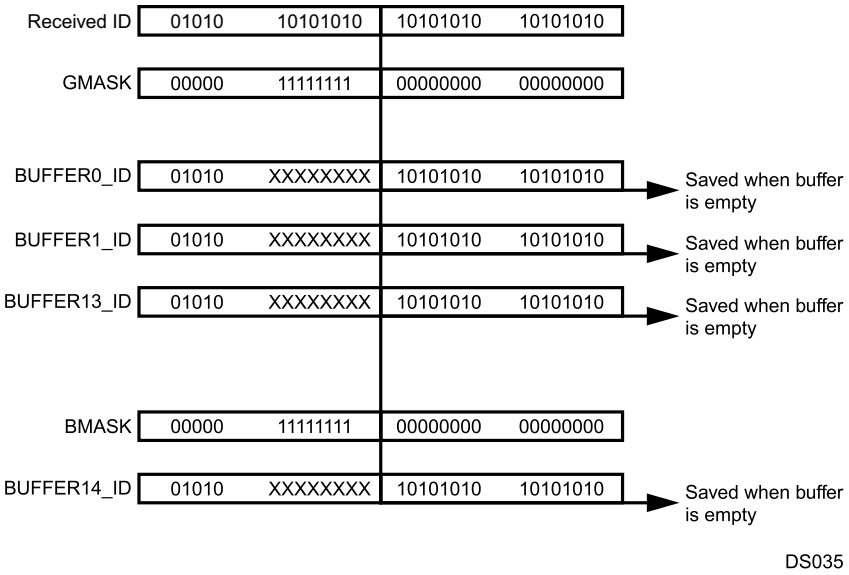

Figure 19-18. Message Storage with BUFFLOCK Enabled

19.5 RECEIVE STRUCTURE

All received frames are initially buffered in a hidden receive buffer until the frame is valid. (The validation point for a received message is the next-to-last bit of the EOF.) The received identifier is then compared to every buffer ID together with the respective mask and the status. As soon as the validation point is reached, the whole contents of the hidden buffer are copied into the matching message buffer as shown in Figure 19-19.

Note: The hidden receive buffer must not be accessed by the CPU.

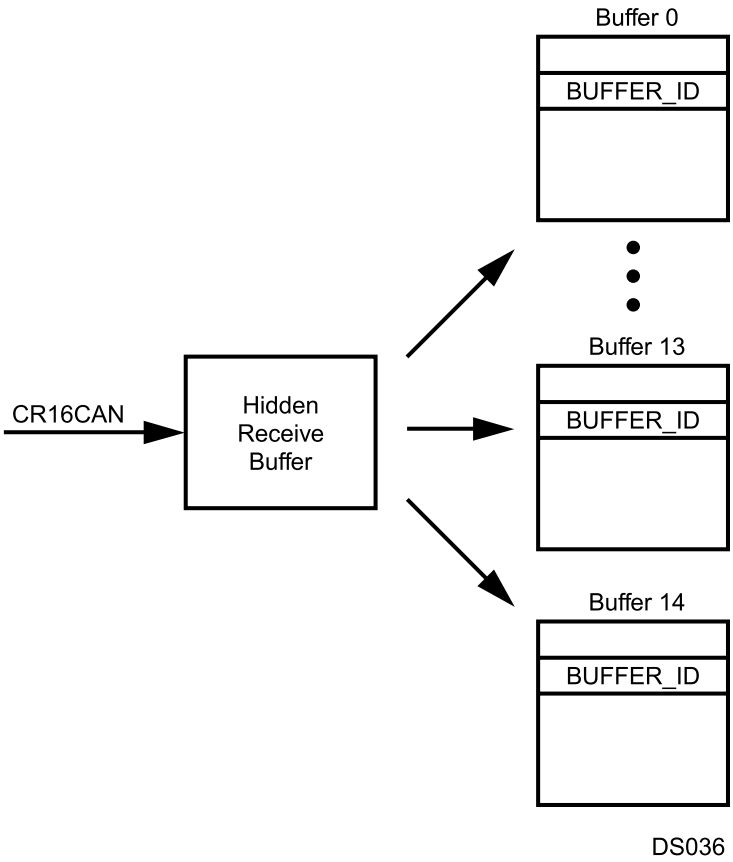

Figure 19-19. Receive Buffer

The following section gives an overview of the reception of the different types of frames.

The received data frame is stored in the first matching receive buffer beginning with buffer 0. For example, if the message is accepted by buffer 5, then at the time the message will be copied, the RX request is cleared and the CAN module will not try to match the frame to any subsequent buffer.

All contents of the hidden receive buffer are always copied into the respective receive buffer. This includes the received message ID as well as the received Data Length Code (DLC); therefore when some mask bits are set to don't care, the ID field will get the received message ID which could be different from the previous ID. The DLC of the receiving buffer will be updated by the DLC of the received frame. The DLC of the received message is not compared with the DLC already present in the CNSTAT register of the message buffer. This implies that the DLC code of the CNSTAT register indicates how may data bytes actually belong to the latest received message.

Copyright © 2007–2013, Texas Instruments Incorporated

The remote frames are handled by the CAN interface in two different ways. In the first method, remote frames can be received like data frames by configuring the buffer to be RX_READY and setting the ID bits including the RTR bit. In that case, the same procedure applies as described for Data Frames. In the second method, a remote frame can trigger one or more message buffer to transmit a data frame upon reception. This procedure is described under To answer remote frames.

19.5.1 Receive Timing

As soon as the CAN module receives a "dominant" bit on the CAN bus, the receive process is started. The received ID and data will be stored in the hidden receive buffer if the global or basic acceptance filtering matches. After the reception of the data, CAN module tries to match the buffer ID of buffer 0...14. The data will be copied into the buffer after the reception of the 6th EOF bit as a message is valid at this time. The copy process of every frame, regardless of the length, takes at least 17 CKI cycles (see also CPU Access to CAN Registers/Memory). Figure 19-20 shows the receive timing.

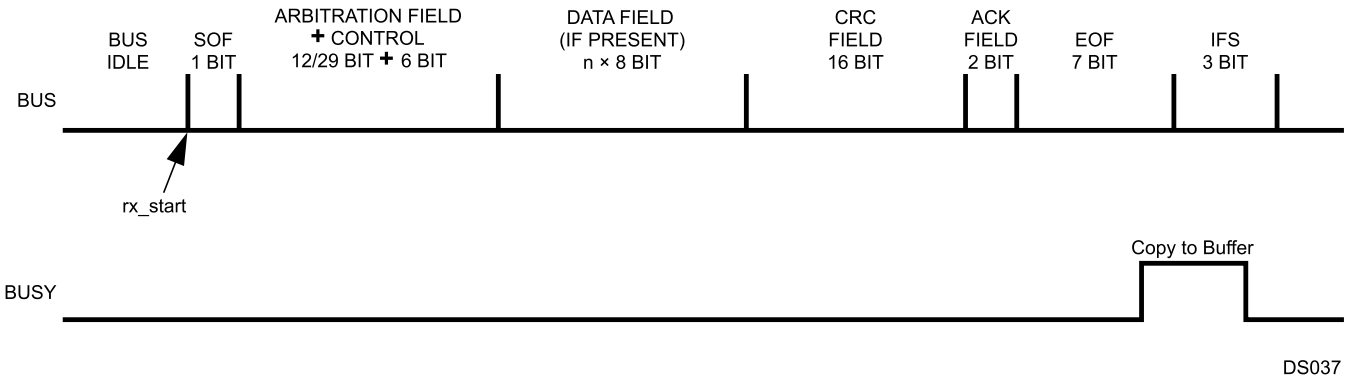

Figure 19-20. Receive Timing

To indicate that a frame is waiting in the hidden buffer, the BUSY bit (ST[0]) of the selected buffer is set during the copy procedure. The BUSY bit will be cleared by the CAN module immediately after the data bytes are copied into the buffer. After the copy process is finished, the CAN module changes the status field to RX_FULL. In turn, the CPU should change the status field to RX_READY when the data is processed. When a new object has been received by the same buffer, before the CPU changed the status to RX_READY, the CAN module will change the status to RX_OVERRUN to indicate that at least one frame has been overwritten by a new one. Table 19-2 summarizes the current status and the resulting update from the CAN module.

Table 19-2. Writing to Buffer Status Code During RX_BUSY

Current Status	Resulting Status
RX_READY	RX_FULL
RX_NOT_ACTIVE	RX_NOT_ACTIVE
RX_FULL	RX_OVERRUN

During the assertion of the BUSY bit, all writes to the receiving buffer are disabled with the exception of the status field. If the status is changed while the BUSY bit is asserted, the status is updated by the CAN module as shown in Table 19-2.

The buffer states are indicated and controlled by the ST[3:0] bits in the CNSTAT register (see Buffer Status/Control Register (CNSTAT). The various receive buffer states are explained in RX Buffer States.

19.5.2 Receive Procedure

Software executes the following procedure to initialize a message buffer for the reception of a CAN message.

1. Configure the receive masks (GMASK or BMASK).
2. Configure the buffer ID.
3. Configure the message buffer status as RX_READY.

To read the out of a received message, the CPU must execute the following steps (see Figure 19-21):

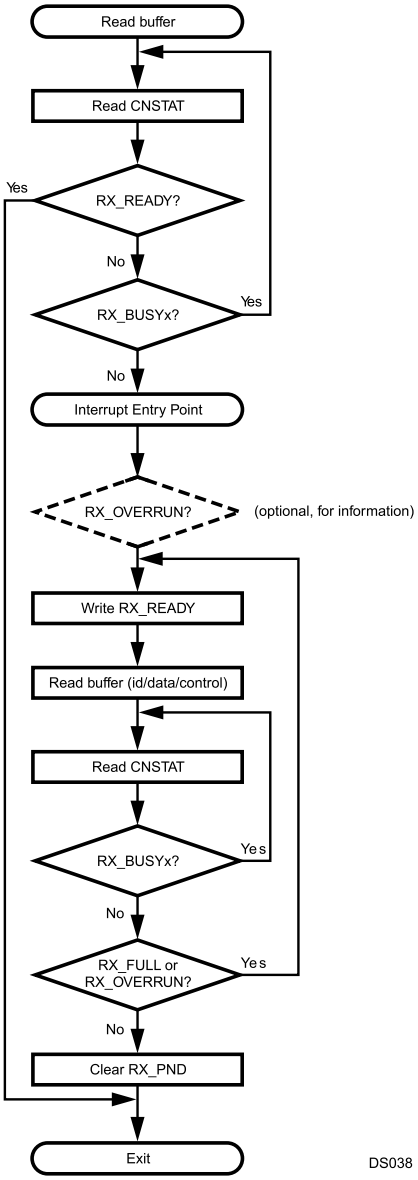

Figure 19-21. Buffer Read Routine (BUFFLOCK Disabled)

Copyright © 2007–2013, Texas Instruments Incorporated

The first step is only applicable if polling is used to get the status of the receive buffer. It can be deleted for an interrupt driven receive routine.

1. Read the status (CNSTAT) of the receive buffer. If the status is RX_READY, no was the message received, so exit. If the status is RX_BUSY, the copy process from hidden receive buffer is not completed yet, so read CNSTAT again.
   If a buffer is configured to RX_READY and its interrupt is enabled, it will generate an interrupt as soon as the buffer has received a message and entered the RX_FULL state (see also Interrupts). In that case the procedure described below must be followed.
2. Read the status to determine if a new message has overwritten the one originally received which triggered the interrupt.
3. Write RX_READY into CNSTAT.
4. Read the ID/data and object control (DLC/RTR) from the message buffer.
5. Read the buffer status again and check it is not RX_BUSYx. If it is, repeat this step until RX_BUSYx has gone away.
6. If the buffer status is RX_FULL or RX_OVERRUN, one or more messages were copied. In that case, start over with step 2.
7. If status is still RX_READY (as set by the CPU at step 2), clear interrupt pending bit and exit.

When the BUFFLOCK function is enabled (see BUFFLOCK), it is not necessary to check for new messages received during the read process from the buffer, as this buffer is locked after the reception of the first valid frame. A read from a locked receive buffer can be performed as shown in Figure 19-22.

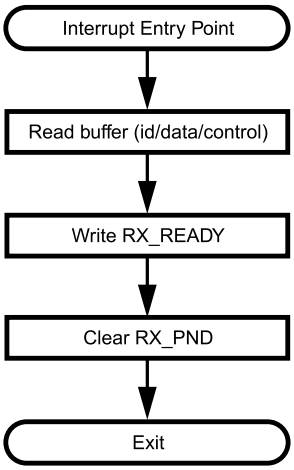

DS039

Figure 19-22. Buffer Read Routine (BUFFLOCK Enabled)

For simplicity only the applicable interrupt routine is shown:

- Read the ID/data and object control (DLC/RTR) from the message buffer.
- Write RX_READY into CNSTAT.
- Clear interrupt pending bit and exit.

19.5.3 RX Buffer States

As shown in Figure 19-22, a receive procedure starts as soon as software has set the buffer from the RX_NOT_ACTIVE state into the RX_READY state. The status section of CNSTAT register is set from 0000b to 0010b. When a message is received, the buffer will be RX_BUSYx during the copy process from the hidden receive buffer into the message buffer. Afterwards this buffer is RX_FULL. The CPU can then read the buffer data and either reset the buffer status to RX_READY or receive a new frame before the CPU reads the buffer. In the second case, the buffer state will automatically change to RX_OVERRUN to indicate that at least one message was lost. During the copy process the buffer will again be RX_BUSYx for a short time, but in this case the CNSTAT status section will be 0101b, as the buffer was RX_FULL (0100b) before. After finally reading the last received message, the CPU can reset the buffer to RX_READY.

19.6 TRANSMIT STRUCTURE

To transmit a CAN message, software must configure the message buffer by changing the buffer status to TX_NOT_ACTIVE. The buffer is configured for transmission if the ST[3] bit of the buffer status code (CNSTAT) is set. In TX_NOT_ACTIVE status, the buffer is ready to receive data from the CPU. After receiving all transmission data (ID, data bytes, DLC, and PRI), the CPU can start the transmission by writing TX_ONCE into the buffer status register. During the transmission, the status of the buffer is TX_BUSYx. After successful transmission, the CAN module will reset the buffer status to TX_NOT_ACTIVE. If the transmission process fails, the buffer condition will remain TX_BUSYx for retransmission until the frame was successfully transmitted or the CPU has canceled the transmission request.

To Send a Remote Frame (Remote Transmission Request) to other CAN nodes, software sets the RTR bit of the message identifier (see Storage of Remote Messages) and changes the status of the message buffer to TX_ONCE. After this remote frame has been transmitted successfully, this message buffer will automatically enter the RX_READY state and is ready to receive the appropriate answer. Note that the mask bits RTR/XRTR need to be set to receive a data frame (RTR = 0) in a buffer which was configured to transmit a remote frame (RTR = 1).

To answer Remote Frames, the CPU writes TX_RTR in the buffer status register, which causes the buffer to wait for a remote frame. When a remote frame passes the acceptance filtering mask of one or more buffers, the buffer status will change to TX_ONCE_RTR, the contents of the buffer will be transmitted, and afterwards the CAN module will write TX_RTR in the status code register again.

If the CPU writes TX_ONCE_RTR into the buffer status, the contents of the buffer will be transmitted, and the successful transmission the buffer goes into the “wait for Remote Frame” condition TX_RTR.

Copyright © 2007–2013, Texas Instruments Incorporated

19.6.1 Transmit Scheduling

After writing TX_ONCE into the buffer status, the transmission process begins and the BUSY bit is set. As soon as a buffer gets the TX_BUSY status, the buffer is no longer accessible by the CPU except for the ST[3:1] bits of the CNSTAT register. Starting with the beginning of the CRC field of the current frame, the CAN module looks for another buffer transmit request and selects the buffer with the highest priority for the next transmission by changing the buffer state from TX_ONCE to TX_BUSY. This transmit request can be canceled by the CPU or can be overwritten by another transmit request of a buffer with a higher priority as long as the transmission of the next frame has not yet started. This means that between the beginning of the CRC field of the current frame and the transmission start of the next frame, two buffers, the current buffer and the buffer scheduled for the next transmission, are in the BUSY status. To cancel the transmit request of the next frame, the CPU must change the buffer state to TX_NOT_ACTIVE. When the transmit request has been overwritten by another request of a higher priority buffer, the CAN module changes the buffer state from TX_BUSY to TX_ONCE. Therefore, the transmit request remains pending. Figure 19-23 further illustrates the transmit timing.

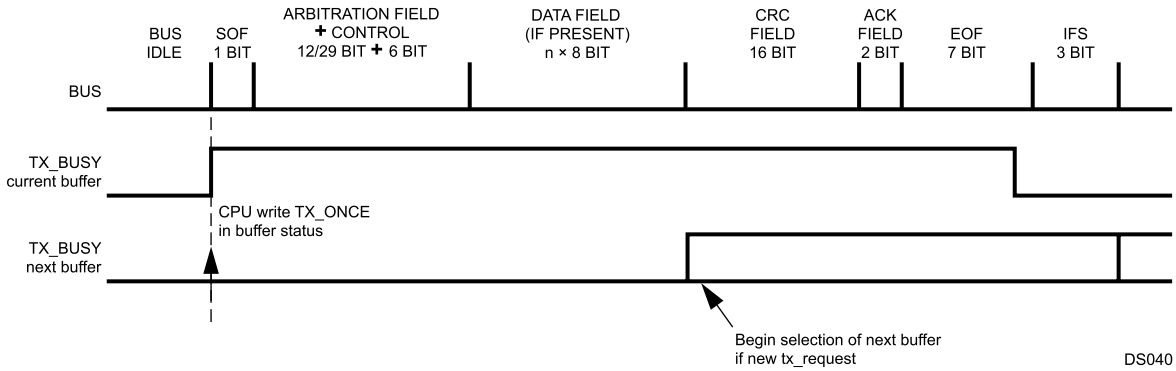

Figure 19-23. Data Transmission

If the transmit process fails or the arbitration is lost, the transmission process will be stopped and will continue after the interrupting reception or the error signaling has finished (see Figure 19-23). In that case, a new buffer select follows and the TX process is executed again.

Note: The canceled message can be delayed by a TX request of a buffer with a higher priority. While TX_BUSY is high, software cannot change the contents of the message buffer object. In all cases, writing to the BUSY bit will be ignored.

19.6.2 Transmit Priority

The CAN module is able to generate a stream of scheduled messages without releasing the bus between two messages so that an optimized performance can be achieved. It will arbitrate for the bus immediately after sending the previous message and will only release the bus due to a lost arbitration.

If more than one buffer is scheduled for transmission, the priority is built by the message buffer number and the priority code in the CNSTAT register. The 8-bit value of the priority is combined by the 4-bit TXPRI value and the 4-bit buffer number (0...14) as shown in Table 19-3. The lowest resulting number results in the highest transmit priority.

7 – 4	3 – 0
TXPRI	BUFFER #

LEGEND

Table 19-3 shows the transmit priority configuration if the priority is TXPRI = 0 for all transmit buffers:

Table 19-3. Transmit Priority (TXPRI = 0)

TXPRI	Buffer Number	PRI	TX Priority
0	0	0	Highest
0	1	1	
. . . .	. . . .	. . . .	. . . .
0	14	14	Lowest

Table 19-4 shows the transmit priority configuration if TXPRI is different from the buffer number:

Table 19-4. Transmit Priority (TXPRI not 0)

TXPRI	Buffer Number	PRI	TX Priority
14	0	224	Lowest
13	1	209	
12	2	194	
11	3	179	
10	4	164	
9	5	149	
8	6	134	
7	7	119	
6	8	104	
5	9	89	
4	10	74	
3	11	59	
2	12	44	
1	13	29	
0	14	14	Highest

Note: If two buffers have the same priority (PRI), the buffer with the lower buffer number will have the higher priority.

Copyright © 2007–2013, Texas Instruments Incorporated

19.6.3 Transmit Procedure

The transmission of a CAN message must be executed as follows (see also Figure 19-24)

1. Configure the CNSTAT status field as TX_NOT_ACTIVE. If the status is TX_BUSY, a previous transmit request is still pending and software has no access to the data contents of the buffer. In that case, software may choose to wait until the buffer becomes available again as shown. Other options are to exit from the update routine until the buffer has been transmitted with an interrupt generated, or the transmission is aborted by an error.
2. Load buffer identifier and data registers. (For remote frames the RTR bit of the identifier needs to be set and loading data bytes can be omitted.)
3. Configure the CNSTAT status field to the desired value:
   - TX_ONCE to trigger the transmission process of a single frame
   - TX_ONCE_RTR to trigger the transmission of a single data frame and then wait for a received remote frame to trigger consecutive data frames.
   - TX_RTR waits for a remote frame to trigger the transmission of a data frame.

Writing TX_ONCE or TX_ONCE_RTR in the CNSTAT status field will set the internal transmit request for the CAN module.

If a buffer is configured as TX_RTR and a remote frame is received, the data contents of the addressed buffer will be transmitted automatically without further CPU activity.

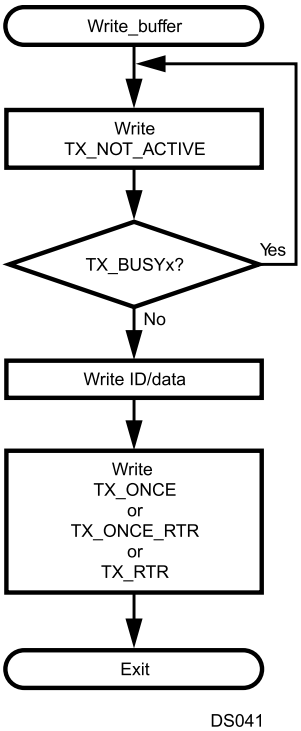

Figure 19-24. Buffer Write Routine

19.6.4 TX Buffer States

The transmission process can be started after software has loaded the buffer registers (data, ID, DLC, PRI) and set the buffer status from TX_NOT_ACTIVE to TX_ONCE, TX_RTR, or TX_ONCE_RTR.

When the CPU writes TX_ONCE, the buffer will be TX_BUSY as soon as the CAN module has scheduled this buffer for the next transmission. After the frame could be successfully transmitted, the buffer status will be automatically reset to TX_NOT_ACTIVE when a data frame was transmitted or to RX_READY when a remote frame was transmitted.

If the CPU configures the message buffer to TX_ONCE_RTR, it will transmit its data contents. During the transmission, the buffer state is 1111b as the CPU wrote 1110b into the status section of the CNSTAT register. After the successful transmission, the buffer enters the TX_RTR state and waits for a remote frame. When it receives a remote frame, it will go back into the TX_ONCE_RTR state, transmit its data bytes, and return to TX_RTR. If the CPU writes 1010b into the buffer status section, it will only enter the TX_RTR state, but it will not send its data bytes before it waits for a remote frame. Figure 19-25 illustrates the possible transmit buffer states.

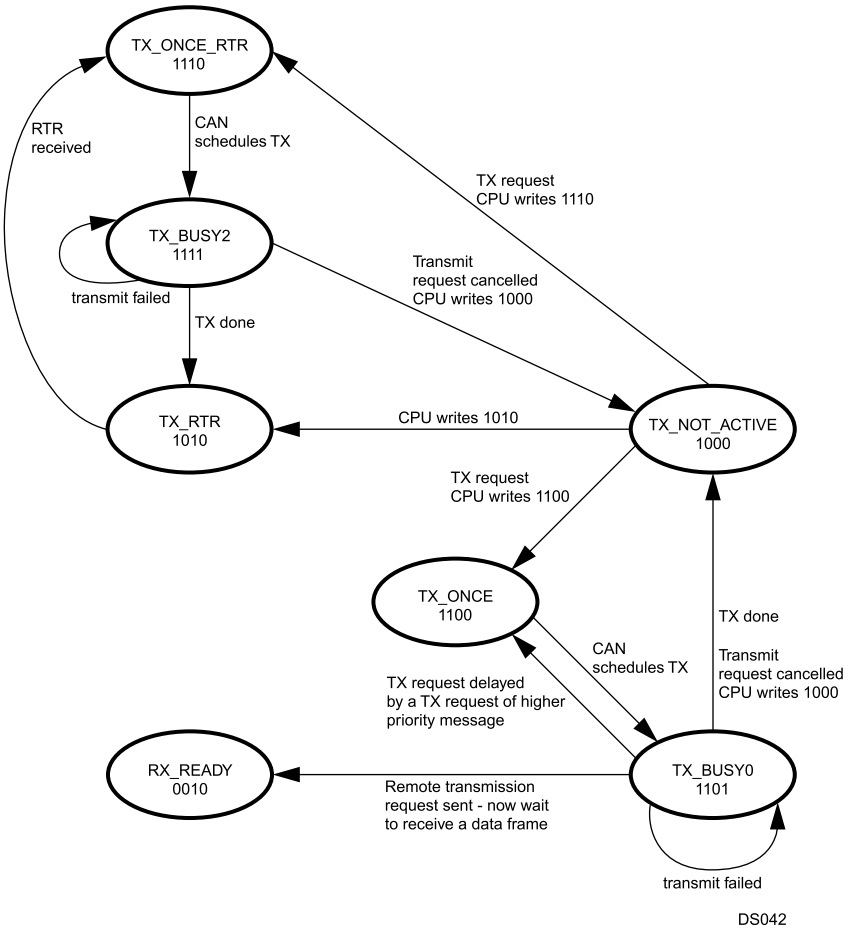

Figure 19-25. Transmit Buffer States

Copyright © 2007–2013, Texas Instruments Incorporated

19.7 Interrupts

The CAN module has one dedicated ICU interrupt vector for all interrupt conditions. In addition, the data frame receive event is an input to the MIWU (see Multi-Input Wake-Up). The interrupt process can be initiated from the following sources.

- CAN data transfer
  - Reception of a valid data frame in the buffer. (Buffer state changes from RX_READY to RX_FULL or RX_OVERRUN.)
  - Successful transmission of a data frame. (Buffer state changes from TX_ONCE to TX_NOT_ACTIVE or RX_READY.)
  - Successful response to a remote frame. (Buffer state changes from TX_ONCE_RTR to TX_RTR.)
  - Transmit scheduling. (Buffer state changes from TX_RTR to TX_ONCE_RTR.)
- CAN error conditions
  - Detection of an CAN error. (The CEIPND bit in the CIPND register will be set as well as the corresponding bits in the error diagnostic register CEDIAG.)

The receive/transmit interrupt access to every message buffer can be individually enabled/disabled in the CIEN register. The pending flags of the message buffer are located in the CIPND register (read only) and can be cleared by resetting the flags in the CICLR registers.

19.7.1 Highest Priority Interrupt Code

To reduce the decoding time for the CIPND register, the buffer interrupt request with the highest priority is placed as interrupt status code into the IST[3:0] section of the CSTPND register.

Each of the buffer interrupts as well as the error interrupt can be individually enabled or disabled in the CAN Interrupt Enable register (CIEN). As soon as an interrupt condition occurs, every interrupt request is indicated by a flag in the CAN Interrupt Pending register (CIPND). When the interrupt code logic for the present highest priority interrupt request is enabled, this interrupt will be translated into the IST3:0 bits of the CAN Status Pending register (CSTPND). An interrupt request can be cleared by setting the corresponding bit in the CAN Interrupt Clear register (CICLR).

Figure 19-26 shows the CAN interrupt management.

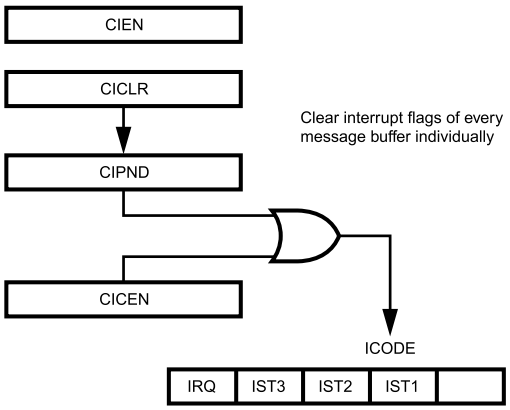

Figure 19-26. Interrupt Management

The highest priority interrupt source is translated into the bits IRQ and IST3:0 as shown in Table 19-5.

Table 19-5. Highest Priority Interrupt Code (ICEN=FFFF)

CAN Interrupt Request	IRQ	IST3	IST2	IST1	IST0
No Request	0	0	0	0	0
Error Interrupt	1	0	0	0	0
Buffer 0	1	0	0	0	1
Buffer 1	1	0	0	1	0
Buffer 2	1	0	0	1	1
Buffer 3	1	0	1	0	0
Buffer 4	1	0	1	0	1
Buffer 5	1	0	1	1	0
Buffer 6	1	0	1	1	1
Buffer 7	1	1	0	0	0
Buffer 8	1	1	0	0	1
Buffer 9	1	1	0	1	0
Buffer 10	1	1	0	1	1
Buffer 11	1	1	1	0	0
Buffer 12	1	1	1	0	1
Buffer 13	1	1	1	1	0
Buffer 14	1	1	1	1	1

19.8 TIME STAMP COUNTER

The CAN module features a free running 16-bit timer (CTMR) incrementing every bit time recognized on the CAN bus. The value of this timer during the ACK slot is captured into the TSTP register of a message buffer after a successful transmission or reception of a message. Figure 19-27 shows a simplified block diagram of the Time Stamp counter.

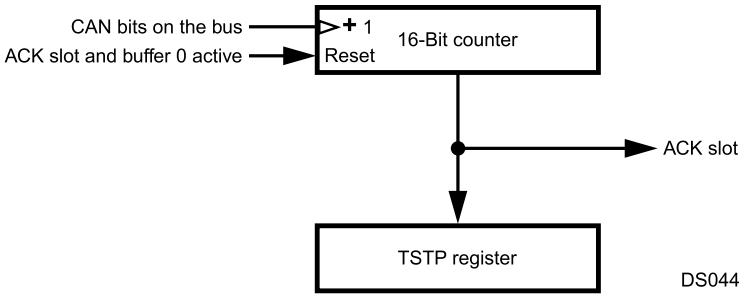

Figure 19-27. Time Stamp Counter

The timer can be synchronized over the CAN network by receiving or transmitting a message to or from buffer 0. In this case, the TSTP register of buffer 0 captures the current CTMR value during the ACK slot of a message (as above), and then the CTMR is reset to 0000b. Synchronization can be enabled or disabled using the CGCR.TSTPEN bit.

Copyright © 2007–2013, Texas Instruments Incorporated

19.9 MEMORY ORGANIZATION

The CAN module occupies 144 words in the memory address space. This space is organized as 15 banks of 8 words per bank (plus one reserved bank) for the message buffers and 14 words (plus 2 reserved words) for control and status.

19.9.1 CPU Access to CAN Registers/Memory

All memory locations occupied by the message buffers are shared by the CPU and CAN module (dual-ported RAM). The CAN module and the CPU normally have single-cycle access to this memory. However, if an access contention occurs, the access to the memory is blocked every cycle until the contention is resolved. This internal access arbitration is transparent to software.

Both word and byte access to the buffer RAM are allowed. If a buffer is busy during the reception of an object (copy process from the hidden receive buffer) or is scheduled for transmission, the CPU has no write access to the data contents of the buffer. Write to the status/control byte and read access to the whole buffer is always enabled.

All configuration and status registers can either be accessed by the CAN module or the CPU only. These registers provide single-cycle word and byte access without any potential wait state.

All register descriptions within the next sections have the following layout:

15	0
Bit/Field Names	
Reset Value	
CPU Access (R = read only, W = write only, R/W = read/write)	

19.9.2 Message Buffer Organization

The message buffers are the communication interfaces between CAN and the CPU for the transmission and the reception of CAN frames. There are 15 message buffers located at fixed addresses in the RAM location. As shown in Table 50, each buffer consists of two words reserved for the identifiers, 4 words reserved for up to eight CAN data bytes, one word reserved for the time stamp, and one word for data length code, transmit priority code, and the buffer status codes.

Table 19-6. Message Buffer Map

Address	Buffer Register	15	14	13	12	11	10	9	8	7	6	5	4	3	2	1	0
0E F0XEh	ID1	XI[28:18]/Id[10:0]											SRR / RTR	IDE	XI[17:15]		
0E F0XCh	ID0	XI[14:0]															RTR
0E F0XAh	DATA0	Data1[7:0]								Data2[7:0]							
0E F0X8h	DATA1	Data3[7:0]								Data4[7:0]							
0E F0X6h	DATA2	Data5{7:0]								Data6[7:0]							
0E F0X4h	DATA3	Data7[7:0]								Data8[7:0]							
0E F0X2h	TSTP	TSTP[15:0]															
0E F0X0h	CNSTAT	DLC				Reserved				PRI				ST			

19.10 CAN CONTROLLER REGISTERS

Table 19-7 lists the CAN module registers.

Table 19-7. CAN Contoller Registers

Name	Address	Description
CNSTAT	See Table 19-6.	CAN Buffer Status/ Control Register
CGCR	0E F100h	CAN Global Configuration Register
CTIM	0E F102h	CAN Timing Register
GMSKX	0E F104h	Global Mask Register
GMSKB	0E F106h	Global Mask Register
BMSKX	0E F108h	Basic Mask Register
BMSKB	0E F10Ah	Basic Mask Register
CIEN	0E F10Ch	CAN Interrupt Enable Register
CIPND	0E F10Eh	CAN Interrupt Pending Register
CICLR	0E F110h	CAN Interrupt Clear Register
CICEN	0E F112h	CAN Interrupt Code Enable Register
CSTPND	0E F114h	CAN Status Pending Register
CANEC	0E F116h	CAN Error Counter Register
CEDIAG	0E F118h	CAN Error Diagnostic Register
CTMR	0E F11Ah	CAN Timer Register

19.10.1 Buffer Status/Control Register (CNSTAT)

The buffer status (ST), the buffer priority (PRI), and the data length code (DLC) are controlled by manipulating the contents of the Buffer Status/Control Register (CNSTAT). The CPU and CAN module have access to this register.

15 – 12	11 – 8	7 – 4	3 – 0
DLC	Reserved	PRI	ST
0			
R/W			

ST The Buffer Status field contains the status information of the buffer as shown in Table 19-8. This field can be modified by the CAN module. The ST0 bits acts as a buffer busy indication. When the BUSY bit is set, any write access to the buffer is disabled with the exception of the lower byte of the CNSTAT register. The CAN module sets this bit if the buffer data is currently copied from the hidden buffer or if a message is scheduled for transmission or is currently transmitting. The CAN module always clears this bit on a status update.

Copyright © 2007–2013, Texas Instruments Incorporated

Table 19-8. Buffer Status Section of the CNSTAT Register

ST3 (DIR)	ST2	ST1	ST0 (BUSY)	Buffer Status
0	0	0	0	RX_NOT_ACTIVE
0	0	0	1	Reserved for RX_BUSY. (This condition indicates that software wrote RX_NOT_ACTIVE to a buffer when the data copy process is still active.)
0	0	1	0	RX_READY
0	0	1	1	RX_BUSY0 (Indicates data is being copied for the first time RX_READY → RX_BUSY0.)
0	1	0	0	RX_FULL
0	1	0	1	RX_BUSY1 (Indicates data is being copied for the second time RX_FULL → RX_BUSY1.)
0	1	1	0	RX_OVERRUN
0	1	1	1	RX_BUSY2 (Indicates data is being copied for the third or subsequent times RX_OVERRUN → RX_BUSY2.)
1	0	0	0	TX_NOT_ACTIVE
1	0	0	1	Reserved for TX_BUSY. (This state indicates that software wrote TX_NOT_ACTIVE to a transmit buffer which is scheduled for transmission or is currently transmitting.)
1	1	0	0	TX_ONCE
1	1	0	1	TX_BUSY0 (Indicates that a buffer is scheduled for transmission or is actively transmitting; it can be due to one of two cases: a message is pending for transmission or is currently transmitting, or an automated answer is pending for transmission or is currently transmitting.)
1	0	1	0	TX_RTR (Automatic response to a remote frame.)
1	0	1	1	Reserved for TX_BUSY1. (This condition does not occur.)
1	1	1	0	TX_ONCE_RTR (Changes to TX_RTR after transmission.)
1	1	1	1	TX_BUSY2 (Indicates that a buffer is scheduled for transmission or is actively transmitting; it can be due to one of two cases: a message is pending for transmission or is currently transmitting, or an automated answer is pending for transmission or is currently transmitting.)

PRI — The Transmit Priority Code field holds the software-defined transmit priority code for the message buffer.

DLC — The Data Length Code field determines the number of data bytes within a received/transmitted frame. For transmission, these bits need to be set according to the number of data bytes to be transmitted. For reception, these bits indicate the number of valid received data bytes available in the message buffer. Table 19-9 shows the possible bit combinations for DLC3:0 for data lengths from 0 to 8 bytes.

Table 19-9. Data Length Coding

DLC	Number of Data Bytes
0000	0
0001	1
0010	2
0011	3
0100	4
0101	5
0110	6
0111	7
1000	8

Note: The maximum number of data bytes received/transmitted is 8, even if the DLC field is set to a value greater than 8. Therefore, if the data length code is greater or equal to eight bytes, the DLC field is ignored.

19.10.2 Storage of Standard Messages

During the processing of standard frames, the Extended- Identifier (IDE) bit is clear. The ID1[3:0] and ID0[15:0] bits are “don’t care” bits. A standard frame with eight data bytes is shown in Table 19-10.

IDE	The Identifier Extension bit determines whether the message is a standard frame or an extended frame. 0 – Message is a standard frame using 11 identifier bits. 1 – Message is an extended frame.
RTR	The Remote Transmission Request bit indicates whether the message is a data frame or a remote frame. 0 – Message is a data frame. 1 – Message is a remote frame.
ID	The ID field is used for the 11 standard frame identifier bits.

Table 19-10. Standard Frame with 8 Data Bytes

Address	Buffer Register	15	14	13	12	11	10	9	8	7	6	5	4	3	2	1	0
0E F0XEh	ID1	ID[10:0]											RTR	IDE	Don't Care		
0E F0XCh	ID0	Don't Care															
0E F0XAh	DATA0	Data1[7:0]								Data2[7:0]							
0E F0X8h	DATA1	Data3[7:0]								Data4[7:0]							
0E F0X6h	DATA2	Data5[7:0]								Data6[7:0]							
0E F0X4h	DATA3	Data7[7:0]								Data8[7:0]							
0E F0XCh	ID0	Don't Care															
0E F0X0h	CNSTAT	DLC				Reserved				PRI				ST			

19.10.3 Storage of Messages with Less Than 8 Data Bytes

The data bytes that are not used for data transfer are “don’t cares”. If the object is transmitted, the data within these bytes will be ignored. If the object is received, the data within these bytes will be overwritten with invalid data.

Copyright © 2007–2013, Texas Instruments Incorporated

19.10.4 Storage of Extended Messages

If the IDE bit is set, the buffer handles extended frames. The storage of the extended ID follows the descriptions in Table 19-11. The SRR bit is at the bit position of the RTR bit for standard frame and needs to be transmitted as 1.

Table 19-11. Standard Frame with 8 Data Bytes

Address	Buffer Register	15	14	13	12	11	10	9	8	7	6	5	4	3	2	1	0
0E F0XEh	ID1	ID[28:18]											SRR	IDE	ID17:15]		
0E F0XCh	ID0	ID[14:0]															RTR
0E F0XAh	DATA0	Data1[7:0]								Data2[7:0]							
0E F0X8h	DATA1	Data3[7:0]								Data4[7:0]							
0E F0X6h	DATA2	Data5[7:0]								Data6[7:0]							
0E F0X4h	DATA3	Data7[7:0]								Data8[7:0]							
0E F0XCh	ID0	TSTP[15:0]															
0E F0X0h	CNSTAT	DLC				Reserved				PRI				ST			

SRR — The Substitute Remote Request bit replaces the RTR bit used in standard frames at this bit position. The SRR bit needs to be set by software if the buffer is configured to transmit a message with an extended identifier. It will be received as monitored on the CAN bus.

IDE — The Identifier Extension bit determines whether the message is a standard frame or an extended frame.
0 – Message is a standard frame using 11 identifier bits.
1 – Message is an extended frame.

RTR — The Remote Transmission Request bit indicates whether the message is a data frame or a remote frame.
0 – Message is a data frame.
1 – Message is a remote frame.

ID — The ID field is used to build the 29-bit identifier of an extended frame.

19.10.5 Storage of Remote Messages

During remote frame transfer, the buffer registers DATA0– DATA3 are “don’t cares”. If a remote frame is transmitted, the contents of these registers are ignored. If a remote frame is received, the contents of these registers will be overwritten with invalid data. The structure of a message buffer set up for a remote frame with extended identifier is shown in Table 19-12.

Table 19-12. Extended Remote Frame

Address	Buffer Register	15	14	13	12	11	10	9	8	7	6	5	4	3	2	1	0
0E F0XEh	ID1	ID[28:18]											SRR	IDE	ID17:15]		
0E F0XCh	ID0	ID[14:0]															RTR
0E F0XAh	DATA0	Don’t Care															
0E F0X8h	DATA1																
0E F0X6h	DATA2																
0E F0X4h	DATA3																
0E F0X2h	TSTP	TSTP															
0E F0X0h	CNSTAT	DLC				Reserved				PRI				ST			

SRR — The Substitute Remote Request bit replaces the RTR bit used in standard frames at this bit position. The SRR bit needs to be set by software.

IDE — The Identifier Extension bit determines whether the message is a standard frame or an extended frame.
0 – Message is a standard frame using 11 identifier bits.
1 – Message is an extended frame.

RTR — The Remote Transmission Request bit indicates whether the message is a data frame or a remote frame.
0 – Message is a data frame.
1 – Message is a remote frame.

ID — The ID field is used to build the 29-bit identifier of an extended frame. The ID[28:18] field is used for the 11 standard frame identifier bits.

Copyright © 2007–2013, Texas Instruments Incorporated

19.10.6 CAN Global Configuration Register (CGCR)

The CAN Global Configuration Register (CGCR) is a 16-bit wide register used to:

- Enable/disable the CAN module.
- Configure the BUFFLOCK function for the message buffer 0..14.
- Enable/disable the time stamp synchronization.
- Set the logic levels of the CAN Input/Output pins, CANRX and CANTX.
- Choose the data storage direction (DDIR).
- Select the error interrupt type (EIT).
- Enable/disable diagnostic functions.

7	6	5	4	3	2	1	0
IGNACK	LO	DDIR	TSTPEN	BUFFLOCK	CRX	CTX	CANEN
0							
R/W							

15	12	11	10	9	8
Reserved		EIT	DIAGEN	INTERNAL	LOOPBACK
0					
R/W					

CANEN — The CAN Enable bit enables/disables the CAN module. When the CAN module is disabled, all internal states and the TEC and REC counter registers are cleared. In addition the CAN module clock is disabled. All CAN module control registers and the contents of the object memory are left unchanged. Software must make sure that no message is pending for transmission before the CAN module is disabled.
0 – CAN module is disabled.
1 – CAN module is enabled.

CTX — The Control Transmit bit configures the logic level of the CAN transmit pin CANTX.
0 – Dominant state is 0; recessive state is 1.
1 – Dominant state is 1; recessive state is 0.

CRX — The Control Receive bit configures the logic level of the CAN receive pin CANRX.
0 – Dominant state is 0; recessive state is 1.
1 – Dominant state is 1; recessive state is 0.

BUFFLOCK — The Buffer Lock bit configures the buffer lock function. If this feature is enabled, a buffer will be locked upon a successful frame reception. The buffer will be unlocked again by writing RX_READY in the buffer status register, that is, after reading data.
0 – Lock function is disabled for all buffers.
1 – Lock function is enabled for all buffers.

TSTPEN — The Time Sync Enable bit enables or disables the time stamp synchronization function of the CAN module. 0 – Time synchronization disabled. The Time Stamp counter value is not reset upon reception or transmission of a message to/from buffer 0.
1 – Time synchronization enabled. The Time Stamp counter value is reset upon reception or transmission of a message to/from buffer 0.

DDIR The Data Direction bit selects the direction the data bytes are transmitted and received. The CAN module transmits and receives the CAN Data1 byte first and the Data8 byte last (Data1, Data2,...,Data7, Data8). If the DDIR bit is clear, the data contents of a received message is stored with the first byte at the highest data address and the last data at the lowest data address (see Figure 19-28). The same applies for transmitted data.
0 – First byte at the highest address, subsequent bytes at lower addresses.
1 – First byte at the lowest address, subsequent bytes at higher addresses.

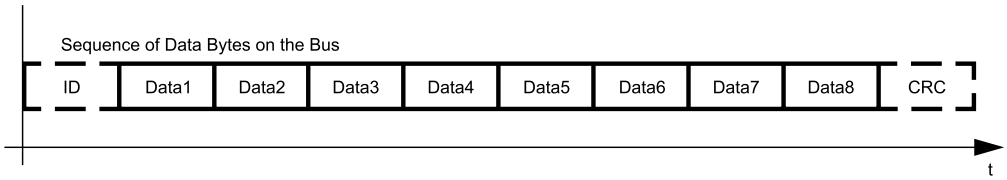

Storage of Data Bytes in the Buffer Memory

ADDR Offset	Data Bytes	
$0A_{16}$	Data1	Data2
08_{16}	Data3	Data4
06_{16}	Data5	Data6
04_{16}	Data7	Data8

DS045

Figure 19-28. Data Direction Bit Clear

Setting the DDIR bit will cause the direction of the data storage to be reversed — the last byte received is stored at the highest address and the first byte is stored at the lowest address, as shown in Figure 19-29.

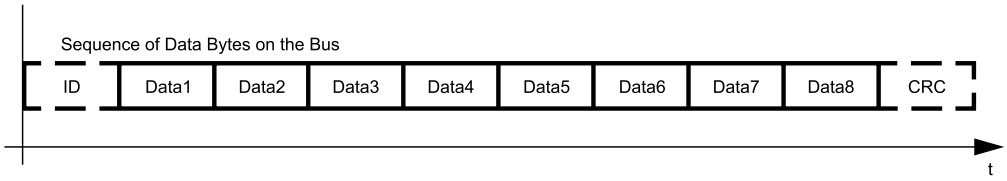

Storage of Data Bytes in the Buffer Memory

ADDR Offset	Data Bytes	
$0A_{16}$	Data8	Data7
08_{16}	Data6	Data5
06_{16}	Data4	Data3
04_{16}	Data2	Data1

DS046

Figure 19-29. Data Direction Bit Set

Copyright © 2007–2013, Texas Instruments Incorporated

LO	The Listen Only bit can be used to configure the CAN interface to behave only as a receiver. This means: • Cannot transmit any message. • Cannot send a dominant ACK bit. • When errors are detected on the bus, the CAN module will behave as in the error passive mode. Using this listen only function, the CAN interface can be adjusted for connecting to an operating network with unknown bus speed. 0 – Transmit/receive mode. 1 – Listen-only mode.
IGNACK	When the Ignore Acknowledge bit is set, the CAN module does not expect to receive a dominant ACK bit to indicate the validity of a transmitted message. It will not send an error frame when the transmitted frame is not acknowledged by any other CAN node. This feature can be used in conjunction with the LOOPBACK bit for stand-alone tests outside of a CAN network. 0 – Normal mode. 1 – The CAN module does not expect to receive a dominant ACK bit to indicate the validity of a transmitted message.
LOOPBACK	When the Loopback bit is set, all messages sent by the CAN module can also be received by a CAN module buffer with a matching buffer ID. However, the CAN module does not acknowledge a message sent by itself. Therefore, the CAN module will send an error frame when no other device connected to the bus has acknowledged the message. 0 – No loopback. 1 – Loopback enabled.
INTERNAL	If the Internal function is enabled, the CANTX and CANRX pins of the CAN module are internally connected to each other. This feature can be used in conjunction with the LOOP-BACK mode. This means that the CAN module can receive its own sent messages without connecting an external transceiver chip to the CANTX and CANRX pins; it allows software to run real stand-alone tests without any peripheral devices. 0 – Normal mode. 1 – Internal mode.
DIAGEN	The Diagnostic Enable bit globally enables or disables the special diagnostic features of the CAN module. This includes the following functions: • LO (Listen Only). • IGNACK (Ignore Acknowledge). • LOOPBACK (Loopback). • INTERNAL (Internal Loopback). • Write access to hidden receive buffer. 0 – Normal mode. 1 – Diagnostic features enabled.
EIT	The Error Interrupt Type bit configures when the Error Interrupt Pending Bit (CIPND.EIPND) is set and an error interrupt is generated if enabled by the Error Interrupt Enable (CIEN.EIEN). 0 – The EIPND bit is set on every error on the CAN bus. 1 – The EIPND bit is set only if the error state (CSTPND.NS) changes as a result of incrementing either the receive or transmit error counter.

Copyright © 2007–2013, Texas Instruments Incorporated

19.10.7 CAN Timing Register (CTIM)

The Can Timing Register (CTIM) defines the configuration of the Bit Time Logic (BTL).

15 – 9	8 – 7	6 – 3	2 – 0
PSC	SJW	TSEG1	TSEG2
0			
R/W			

PSC The Prescaler Configuration field specifies the CAN prescaler. The settings are shown in Table 19-13

Table 19-13. CAN Prescaler Settings

PSC6:0	Prescaler
000000	2
000001	3
000010	4
000011	5
000100	6
:	:
1111101	127
1111110	128
1111111	128

SJW The Synchronization Jump Width field specifies the Synchronization Jump Width, which can be programmed between 1 and 4 time quanta (see Table 19-14).

Table 19-14. SJW Settings

SJW	Synchronization Jump Width (SJW)
00	1 time quantum
01	2 time quanta
10	3 time quanta
11	4 time quanta

Note: The settings of SJW must be configured to be smaller or equal to TSEG1 and TSEG2

Copyright © 2007–2013, Texas Instruments Incorporated

Table 19-15. Time Segment 1 Settings

TSEG1[3:0]	Length of Time (TSEG1)
0000	Not recommended
0001	2 time quanta
0010	3 time quanta
0011	4 time quanta
0100	5 time quanta
0101	6 time quanta
0110	7 time quanta
0111	8 time quanta
1000	9 time quanta
1001	10 time quanta
1010	11 time quanta
1011	12 time quanta
1100	13 time quanta
1101	14 time quanta
1110	15 time quanta
1111	16 time quanta

TSEG2 The Time Segment 2 field specifies the number of time quanta (tq) for phase segment 2 (see Table 19-16).

Table 19-16. Time Segment 2 Settings

TSEG2	Length of Time (TSEG2)
000	1 time quantum
001	2 time quanta
010	3 time quanta
011	4 time quanta
100	5 time quanta
101	6 time quanta
110	7 time quanta
111	8 time quanta

Copyright © 2007–2013, Texas Instruments Incorporated

19.10.8 Global Mask Register (GMSKB/GMSKX)

The GMSKB and GMSKX registers allow software to globally mask, or “don’t care” the incoming extended/standard identifier bits, RTR/XRTR and IDE. Throughout this document, the GMSKB and GMSKX 16-bit registers are referenced as a 32-bit register GMSK.

The following are the bits for the GMSKB register.

15 – 5	4	3	2 – 0
GM[28:18]	RTR	IDE	GM[17:15]
0			
R/W			

The following are the bits for the GMSKX register.

15 – 1	0
GM[14:0]	XRTR
0	
R/W	

For all GMSKB and GMSKX register bits, the following applies:

0 – The incoming identifier bit must match the corresponding bit in the message buffer identifier register.
1 – Accept 1 or 0 (“don’t care”) in the incoming ID bit independent from the corresponding bit in the message buffer ID registers. The corresponding ID bit in the message buffer will be overwritten by the incoming identifier bits.

When an extended frame is received from the CAN bus, all GMSK bits GM[28:0], IDE, RTR, and XRTR are used to mask the incoming message. In this case, the RTR bit in the GMSK register corresponds to the SRR bit in the message. The XRTR bit in the GMSK register corresponds to the RTR bit in the message.

During the reception of standard frames only the GMSK bits GM[28:18], RTR, and IDE are used. In this case, the GM[28:18] bits in the GMSK register correspond to the ID[10:0] bits in the message.

Table 19-17.

Global Mask	GM[28:18]	RTR	IDE	GM[17:0]	XRTR
Standard Frame	ID[10:0]	RTR	IDE	Unused	
Extended Frame	ID[28:18]	SRR	IDE	ID[17:0]	RTR

Copyright © 2007–2013, Texas Instruments Incorporated

19.10.9 Basic Mask Register (BMSKB/BMSKX)

The BMSKB and BMSKX registers allow masking the buffer 14, or “don’t care” the incoming extended/standard identifier bits, RTR/XRTR, and IDE. Throughout this document, the two 16-bit registers BMSKB and BMSKX are referenced to as a 32-bit register BMSK.

The following are the bits for the BMSKB register.

15 … 5	4	3	2 … 0
BM[28:18]	RTR	IDE	BM[17:15]
0			
R/W			

The following are the bits for the BMSKX register.

15 … 1	0
BM[14:0]	XRTR
0	
R/W	

For all BMSKB and BMSKX register bits the following applies:

0 – The incoming identifier bit must match the corresponding bit in the message buffer identifier register.

1 – Accept 1 or 0 (“don’t care”) in the incoming ID bit independent from the corresponding bit in the message buffer ID registers. The corresponding ID bit in the message buffer will be overwritten by the incoming identifier bits.

When an extended frame is received from the CAN bus, all BMSK bits BM[28:0], IDE, RTR, and XRTR are used to mask the incoming message. In this case, the RTR bit in the BMSK register corresponds to the SRR bit in the message. The XRTR bit in the BMSK register corresponds to the RTR bit in the message.

During the reception of standard frames, only the BMSK bits BM[28:18], RTR, and IDE are used. In this case, the BM[28:18] bits in the BMSK register correspond to the ID[10:0] bits in the message.

Table 19-18.

Basic Mask	BM[28:18]	RTR	IDE	BM[17:0]	XRTR
Standard Frame	ID[10:0]	RTR	IDE	Unused	
Extended Frame	ID[28:18]	SRR	IDE	ID[17:0]	RTR

19.10.10 CAN Interrupt Enable Register (CIEN)

The CAN Interrupt Enable (CIEN) register enables the transmit/receive interrupts of the message buffers 0 through 14 as well as the CAN Error Interrupt.

15	14 … 0
EIEN	IEN
0	
R/W	

EIEN — The Error Interrupt Enable bit allows the CAN module to interrupt the CPU if any kind of CAN receive/transmit errors are detected. This causes any error status change in the error counter registers REC/TEC is able to generate an error interrupt.
0 – The error interrupt is disabled and no error interrupt will be generated.
1 – The error interrupt is enabled and a change in REC/TEC will cause an interrupt to be generated.

IEN — The Buffer Interrupt Enable bits allow software to enable/disable the interrupt source for the corresponding message buffer. For example, IEN14 controls interrupts from buffer14, and IEN0 controls interrupts from buffer0.
0 – Buffer as interrupt source disabled.
1 – Buffer as interrupt source enabled.

19.10.11 CAN Interrupt Pending Register (CIPND)

The CIPND register indicates any CAN Receive/Transmit Interrupt Requests caused by the message buffers 0..14 and CAN error occurrences.

15	14 … 0
EIPND	IPND
0	
R	

EIPND — The Error Interrupt Pending field indicates the status change of TEC/REC and will execute an error interrupt if the EIEN bit is set. Software has the responsibility to clear the EIPND bit using the CICLR register.
0 – CAN status is not changed.
1 – CAN status is changed.

IPND — The Buffer Interrupt Pending bits are set by the CAN module following a successful transmission or reception of a message to or from the corresponding message buffer. For example, IPND14 corresponds to buffer14, and IPND0 corresponds to buffer0.
0 – No interrupt pending for the corresponding message buffer.
1 – Message buffer has generated an interrupt.

Copyright © 2007–2013, Texas Instruments Incorporated

19.10.12 CAN Interrupt Clear Register (CICLR)

The CICLR register bits individually clear CAN interrupt pending flags caused by the message buffers and from the Error Management Logic. Do not modify this register with instructions that access the register as a read-modify-write operand, such as the bit manipulation instructions.

15	14 … 0
EICLR	ICLR
0	
W	

EICLR — The Error Interrupt Clear bit is used to clear the EIPND bit.
0 – The EIPND bit is unaffected by writing 0.
1 – The EIPND bit is cleared by writing 1.

ICLR — The Buffer Interrupt Clear bits are used to clear the IPND bits.
0 – The corresponding IPND bit is unaffected by writing 0.
0 – The corresponding IPND bit is cleared by writing 1.

19.10.13 CAN Interrupt Code Enable Register (CICEN)

The CICEN register controls whether the interrupt pending flag in the CIPND register is translated into the Interrupt Code field of the CSTPND register. All interrupt requests, CAN error, and message buffer interrupts can be enabled/ disabled separately for the interrupt code indication field.

15	14 … 0
EICEN	ICEN
0	
R/W	

EICEN — The Error Interrupt Code Enable bit controls encoding for error interrupts.
0 – Error interrupt pending is not indicated in the interrupt code.
1 – Error interrupt pending is indicated in the interrupt code.

ICEN — The Buffer Interrupt Code Enable bits control encoding for message buffer interrupts.
0 – Message buffer interrupt pending is not indicated in the interrupt code.
1 – Message buffer interrupt pending is indicated in the interrupt code.

19.10.14 CAN Status Pending Register (CSTPND)

The CSTPND register holds the status of the CAN Node and the Interrupt Code.

15 – 8	7 – 5	4	3 – 0
Reserved	NS	RQ	IST
0			
R			

NS The CAN Node Status field indicates the status of the CAN node as shown in Table 19-19.

Table 19-19. CAN Node Status

NS	Node Status
000	Not Active
010	Error Active
011	Error Warning Level
10X	Error Passive
11X	Bus Off

IRQ/IST The IRQ bit and IST field indicate the interrupt source of the highest priority interrupt currently pending and enabled in the CICEN register. Table 19-20 shows the several interrupt codes when the encoding for all interrupt sources is enabled (CICEN = FFFFh).

Table 19-20. Highest Priority Interrupt Code

IRQ	IRQ	CAN Interrupt Request
0	0000	No Interrupt Request
1	0000	Error Interrupt
1	0001	Buffer 0
1	0010	Buffer 1
1	0011	Buffer 2
1	0100	Buffer 3
1	0101	Buffer 4
1	0110	Buffer 5
1	0111	Buffer 6
1	1000	Buffer 7
1	1001	Buffer 8
1	1010	Buffer 9
1	1011	Buffer 10
1	1100	Buffer 11
1	1101	Buffer 12
1	1110	Buffer 13
1	1111	Buffer 14

Copyright © 2007–2013, Texas Instruments Incorporated

19.10.15 CAN Error Counter Register (CANEC)

The CANEC register reports the values of the CAN Receive Error Counter and the CAN Transmit Error Counter.

15 – 8	7 – 0
REC	TEC
0	
R	

REC The CAN Receive Error Counter field reports the value of the receive error counter.

TEC The CAN Transmit Error Counter field reports the value of the transmit error counter.

19.10.16 CAN Error Diagnostic Register (CEDIAG)

The CEDIAG register reports information about the last detected error. The CAN module identifies the field within the CAN frame format in which the error occurred, and it identifies the bit number of the erroneous bit within the frame field. The CPU bus master has read-only access to this register, and all bits are cleared on reset.

15	14	13	12	11	10	9 – 4	3 – 0
Res.	DRIVE	MON	CRC	STUFF	TXE	EBID	EFID
0							
R							

EFID The Error Field Identifier field identifies the frame field in which the last error occurred. The encoding of the frame fields is shown in Table 19-21.

Table 19-21. Error Field Identifier

EFID3:0	Field
0000	ERROR
0001	ERROR DEL
0010	ERROR ECHO
0011	BUS IDLE
0100	ACK
0101	EOF
0110	INTERMISSION
0111	SUSPEND TRANSMISSION
1000	SOF
1001	ARBITRATION
1010	IDE
1011	EXTENDED ARBITRATION
1100	R1/R0
1101	DLC
1110	DATA
1111	CRC

EBID — The Error Bit Identifier field reports the bit position of the incorrect bit within the erroneous frame field. The bit number starts with the value equal to the respective frame field length minus one at the beginning of each field and is decremented with each CAN bit. Figure 19-30 shows an example on how the EBID is calculated.

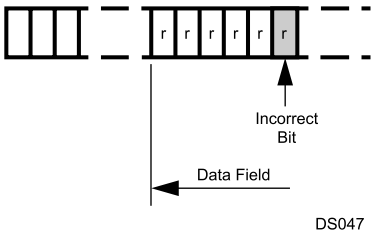

Figure 19-30. EBID Example

For example, assume the EFID field shows 1110b and the EBID field shows 111001b. This means the faulty field was the data field. To calculate the bit position of the error, the DLC of the message needs to be known. For example, for a DLC of 8 data bytes, the bit counter starts with the value: (8 × 8) - 1 = 63; so when EBID[5:0] = 111001b = 57, then the bit number was 63 - 57 = 6.

TXE — The Transmit Error bit indicates whether the CAN module was an active transmitter at the time the error occurred. 0 – The CAN module was a receiver at the time the error occurred. 1 – The CAN module was an active transmitter at the time the error occurred.

STUFF — The Stuff Error bit indicates whether the bit stuffing rule was violated at the time the error occurred. Note that certain bit fields do not use bit stuffing and therefore this bit may be ignored for those fields. 0 – No bit stuffing error. 1 – The bit stuffing rule was violated at the time the error occurred.

CRC — The CRC Error bit indicates whether the CRC is invalid. This bit should only be checked if the EFID field shows the code of the ACK field. 0 – No CRC error occurred. 1 – CRC error occurred.

MON — The Monitor bit shows the bus value on the CANRX pin as sampled by the CAN module at the time of the error.

DRIVE — The Drive bit shows the output value on the CANTX pin at the time of the error. Note that a receiver will not drive the bus except during ACK and during an active error flag.

19.10.17 CAN Timer Register (CTMR)

The CTMR register reports the current value of the Time Stamp Counter as described in Section 19.8.

15															0
CTMR15:0															
0															
R															

The CTMR register is a free running 16-bit counter. It contains the number of CAN bits recognized by the CAN module since the register has been cleared. The counter starts to increment from the value 0000b after a hardware reset. If the Timer Stamp Enable bit (TSTPEN) in the CAN global configuration register (CGCR) is set, the counter will also be cleared on a message transfer of the message buffer 0.

The contents of CTMR are captured into the Time Stamp register of the message buffer after successfully sending or receiving a frame, as described in Section 19.8, "Time Stamp Counter".

Copyright © 2007–2013, Texas Instruments Incorporated

19.11 SYSTEM START-UP AND MULTI-INPUT WAKE-UP

After system start-up, all CAN-related registers are in their reset state. The CAN module can be enabled after all configuration registers are set to their desired value. The following initial settings must be made:

- Configure the CAN Timing register (CTIM). See Bit Time Logic.
- Configure every buffer to its function as receive/transmit. See Buffer Status Control Register.
- Set the acceptance filtering masks. See Acceptance Filtering.
- Enable the CAN interface. See CAN Global Configuraion Register (CGCR).

Before disabling the CAN module, software must make sure that no transmission is still pending.

Note: Activity on the CAN bus can wake up the device from a reduced-power mode by selecting the CANRX pin as an input to the Multi-Input Wake-Up module. In this case, the CAN module must not be disabled before entering the reduced-power mode. Disabling the CAN module also disables the CANRX pin. As an alternative, the CANRX pin can be connected to any other input pin of the Multi-Input Wake- Up module. This input channel must then be configured to trigger a wake-up event on a falling edge (if a dominant bit is represented by a low level). In this case, the CAN module can be disabled before entering the reduced-power mode. After waking up, software must enable the CAN module again. All configuration and buffer registers still contain the same data they held before the reduced-power mode was entered.

19.11.1 External Connection

The CAN module uses the CANTX and CANRX pins to connect to the physical layer of the CAN interface. They provide the functionality described in Table 19-22.

Table 19-22. External CAN Pins

Signal Name	Type	Description
CANTX	Output	Transmit data to the CAN bus
CANRX	Input	Receive data from the CAN bus

The logic levels are configurable by the CTX and CRX bits of the Global Configuration Register CGCR. See CAN Global Configuraion Register (CGCR).

19.11.2 Transceiver Connection

An external transceiver chip must be connected between the CAN block and the bus. It establishes a bus connection in differential mode and provides the driver and protection requirements. Figure 19-31 shows a possible ISO-High-Speed configuration.

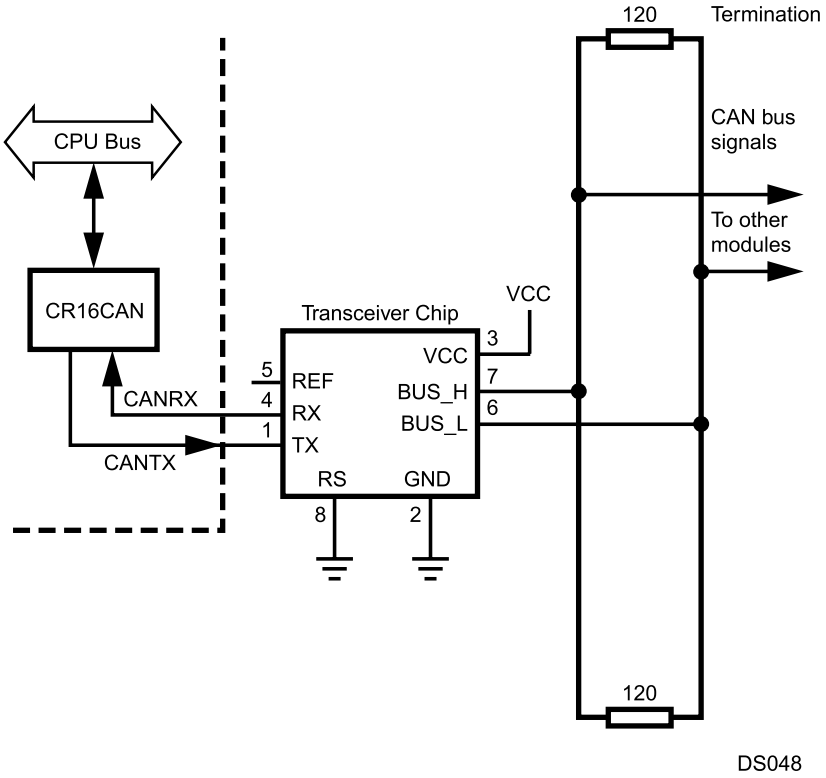

Figure 19-31. External Transceiver

19.11.3 Timing Requirements

Processing messages and updating message buffers require a certain number of clock cycles, as shown in Table 65. These requirements may lead to some restrictions regarding the Bit Time Logic settings and the overall CAN performance which are described below in more detail. Wait cycles need to be added to the cycle count for CPU access to the object memory as described in CPU Access to CAN Registers/Memory. The number of occurrences per frame is dependent on the number of matching identifiers.

Table 19-23. CAN Module Internal Timing

Task	Cycle Count	Occurrence/Frame
Copy hidden buffer to receive message buffer	17	0-1
Update status from TX_RTR to TX_ONCE_RTR	3	0-15
Schedule a message for transmission	2	0-1

Copyright © 2007–2013, Texas Instruments Incorporated

The critical path derives from receiving a remote frame, which triggers the transmission of one or more data frames. There are a minimum of four bit times in-between two consecutive frames. These bit times start at the validation point of received frame (reception of 6th EOF bit) and end at the earliest possible transmission start of the next frame, which is after the third intermission bit at 100% burst bus load.

These four bit times have to be set in perspective with the timing requirements of the CAN module.

The minimum duration of the four CAN bit times is determined by the following Bit Time Logic settings:

PSC = PSCmin = 2

TSEG1 = TSEG1min = 2

TSEG2 = TSEG2min = 1

Bit time = Sync + Time Segment 1 + Time Segment 2

- = (1 + 2 + 1) tq = 4 tq
- = (4 tq × PSC) clock cycles
- = (4 tq × 2) clock cycles = 8 clock cycles

For these minimum BTL settings, four CAN bit times take 32 clock cycles.

The following is an example that assumes typical case:

- Minimum BTL settings
- Reception and copy of a remote frame
- Update of one buffer from TX_RTR
- Schedule of one buffer from transmit

As outlined in Table 19-23, the copy process, update, and scheduling the next transmission gives a total of 17 + 3 + 2 = 22 clock cycles. Therefore under these conditions there is no timing restriction.

The following example assumes the worst case:

- Minimum BTL settings
- Reception and copy of a remote frame
- Update of the 14 remaining buffers from TX_RTR
- Schedule of one buffer for transmit

All these actions in total require 17 + (14 × 3) + 2 = 61 clock cycles to be executed by the CAN module. This leads to the limitation of the Bit Time Logic of 61 / 4 = 15.25 clock cycles per CAN bit as a minimum, resulting in the minimum clock frequencies listed below. (The frequency depends on the desired baud rate and assumes the worst case scenario can occur in the application.)

Copyright © 2007–2013, Texas Instruments Incorporated

Table 19-24 gives examples for the minimum clock frequency in order to ensure proper functionality at various CAN bus speeds.

Table 19-24. Minimum Clock Frequency Requirements

Baud Rate	Minimum Clock Frequency
1 Mbit/sec	15.25 MHz
500 kbit/sec	7.625 MHz
250 kbit/sec	3.81 MHz

19.11.4 Bit Time Logic Calculation Examples

The calculation of the CAN bus clocks using CKI = 16 MHz is shown in the following examples. The desired baud rate for both examples is 1 Mbit/s.

Example 1

PSC = PSC[5:0] + 2 = 0 + 2 = 2

TSEG1 = TSEG1[3:0] + 1 = 3 + 1 = 4

TSEG2 = TSEG2[2:0] + 1 = 2 + 1 = 3

SJW = TSEG2 = 3

- Sample point positioned at 62.5% of bit time
- Bit time = 125 ns × (1 + 4 + 3 M 3) = (1 M 0.375) µs
- Bus Clock = 16 MHz / (2 × (1 + 4 + 3)) = 1 Mbit/s (nominal)

Example 2

PSC = PSC[5:0] + 1 = 2 + 2 = 4

TSEG1 = TSEG1[3:0] + 1 = 1 + 1 = 2

TSEG2 = TSEG2[2:0] + 1 = 0 + 1 = 1

SJW = TSEG2 = 1

- Sample point positioned at 75% of bit time
- Bit time = 250 ns × (1 + 2 + 1 M 1) = (1 M 0.25) µs
- Bus Clock = 16 MHz / (2 × (1 + 4 + 3)) = 1Mbit/s (nominal)

Copyright © 2007–2013, Texas Instruments Incorporated

19.11.5 Acceptance Filter Considerations

The CAN module provides two acceptance filter masks GMSK and BMSK, as described in Acceptance Filtering , Global Mask Register (GMSKB/GMSKX), and Basic Mask Register (BMSKB/BMSKX). These masks allow filtering of up to 32 bits of the message object, which includes the standard identifier, the extended identifier, and the frame control bits RTR, SRR, and IDE.

19.11.6 Remote Frames

Remote frames can be automatically processed by the CAN module. However, to fully enable this feature, the RTR/ XRTR bits (for both standard and extended frames) within the BMSK and/or GMSK register need to be set to “don’t care”. This is because a remote frame with the RTR bit set should trigger the transmission of a data frame with the RTR bit clear and therefore the ID bits of the received message need to pass through the acceptance filter. The same applies to transmitting remote frames and switching to receive the corresponding data frames.

19.12 USAGE HINT

Under certain conditions, the CAN module receives a frame sent by itself, even though the loopback feature is disabled. Two conditions must be true to cause this malfunction:

- A transmit buffer and at least one receive buffer are configured with the same identifier. Assume this identifier is called ID_RX_TX. With regard to the receive buffer, this means that the buffer identifier and the corresponding filter masks are set up in a way that the buffer is able to receive frames with the identifier ID_RX_TX.
- The following sequence of events occurs:
  1. A message with the identifier ID_RX_TX from another CAN node is received into the receive buffer.
  2. A message with the identifier ID_RX_TX is sent by the CAN module immediately after the reception took place.

When these conditions occur, the frame sent by the CAN module will be copied into the next receive buffer available for the identifier ID_RX_TX. If a frame with an identifier different to ID_RX_TX is sent or received in between events 1 and 2, the problem does not occur.

20 ADVANCED AUDIO INTERFACE

The Advanced Audio Interface (AAI) provides a serial synchronous, full duplex interface to codecs and similar serial devices. The transmit and receive paths may operate asynchronously with respect to each other. Each path uses a 3-wire interface consisting of a bit clock, a frame synchronization signal, and a data signal.

The CPU interface can be either interrupt-driven or DMA. If the interface is configured for interrupt-driven I/O, data is buffered in the receive and transmit FIFOs. If the interface is configured for DMA, the data is buffered in registers.

The AAI is functionally similar to a MotorolaTM Synchronous Serial Interface (SSI). Compared to a standard SSI implementation, the AAI interface does not support the so-called “On-demand Mode”. It also does not allow gating of the shift clocks, so the receive and transmit shift clocks are always active while the AAI is enabled. The AAI also does not support 12- and 24-bit data word length or more than 4 slots (words) per frame. The reduction of supported modes is acceptable, because the main purpose of the AAI is to connect to audio codecs, rather than to other processors (DSPs).

The implementation of a FIFO as a 16-word receive and transmit buffer is an additional feature, which simplifies communication and reduces interrupt load. Independent DMA is provided for each of the four supported audio channels (slots). The AAI also provides special features and operating modes to simplify gain control in an external codec and to connect to an ISDN controller through an IOM-2 compatible interface.

20.1 AUDIO INTERFACE SIGNALS

20.1.1 Serial Transmit Data (STD)

The STD pin is used to transmit data from the serial transmit shift register (ATSR). The STD pin is an output when data is being transmitted and is in high-impedance mode when no data is being transmitted. The data on the STD pin changes on the positive edge of the transmit shift clock (SCK). The STD pin goes into high-impedance mode on the negative edge of SCK of the last bit of the data word to be transmitted, assuming no other data word follows immediately. If another data word follows immediately, the STD pin remains active rather than going to the high-impedance mode.

20.1.2 Serial Transmit Clock (SCK)

The SCK pin is a bidirectional signal that provides the serial shift clock. In asynchronous mode, this clock is used only by the transmitter to shift out data on the positive edge. The serial shift clock may be generated internally or it may be pro- vided by an external clock source. In synchronous mode, the SCK pin is used by both the transmitter and the receiver. Data is shifted out from the STD pin on the positive edge, and data is sampled on the SRD pin on the negative edge.

20.1.3 Serial Transmit Frame Sync (SFS)

The SFS pin is a bidirectional signal which provides frame synchronization. In asynchronous mode, this signal is used as frame sync only by the transmitter. In synchronous mode, this signal is used as frame sync by both the transmitter and receiver. The frame sync signal may be generated internally, or it may be provided by an external source.

20.1.4 Serial Receive Data (SRD)

The SRD pin is used as an input when data is shifted into the Audio Receive Shift Register (ARSR). In asynchronous mode, data on the SRD pin is sampled on the negative edge of the serial receive shift clock (SRCLK). In synchronous mode, data on the SRD pin is sampled on the negative edge of the serial shift clock (SCK). The data is shifted into ARSR with the most significant bit (MSB) first.

 Copyright © 2007–2013, Texas Instruments Incorporated

20.1.5 Serial Receive Clock (SRCLK)

The SRCLK pin is a bidirectional signal that provides the receive serial shift clock in asynchronous mode. In this mode, data is sampled on the negative edge of SRCLK. The SRCLK signal may be generated internally or it may be provided by an external clock source. In synchronous mode, the SCK pin is used as shift clock for both the receiver and transmitter, so the SRCLK pin is available for use as a general-purpose port pin or an auxiliary frame sync signal to access multiple slave devices (for example codecs) within a network (see Network mode).

20.1.6 Serial Receive Frame Sync (SRFS)

The SRFS pin is a bidirectional signal that provides frame synchronization for the receiver in asynchronous mode. The frame sync signal may be generated internally, or it may be provided by an external source. In synchronous mode, the SFS signal is used as the frame sync signal for both the transmitter and receiver, so the SRFS pin is available for use as a general-purpose port pin or an auxiliary frame sync signal to access multiple slave devices (for example codecs) within a network (see Network mode).

20.2 AUDIO INTERFACE MODES

There are two clocking modes: asynchronous mode and synchronous mode. These modes differ in the source and timing of the clock signals used to transfer data. When the AAI is generating the bit shift clock and frame sync signals internally, synchronous mode must be used.

There are two framing modes: normal mode and network mode. In normal mode, one word is transferred per frame. In network mode, up to four words are transferred per frame. A word may be 8 or 16 bits. The part of the frame which carries a word is called a slot. Network mode supports multiple external devices sharing the interface, in which each device is assigned its own slot. Separate frame sync signals are provided, so that each device is triggered to send or receive its data during its assigned slot.

20.2.1 Asynchronous Mode

In asynchronous mode, the receive and transmit paths of the audio interface operate independently, with each path using its own bit clock and frame sync signal. Independent clocks for receive and transmit are only used when the bit clock and frame sync signal are supplied externally. If the bit clock and frame sync signals are generated internally, both paths derive their clocks from the same set of clock prescalers.

20.2.2 Synchronous Mode

In synchronous mode, the receive and transmit paths of the audio interface use the same shift clock and frame sync signal. The bit shift clock and frame sync signal for both paths are derived from the same set of clock prescalers.

20.2.3 Normal Mode

In normal mode, each rising edge on the frame sync signal marks the beginning of a new frame and also the beginning of a new slot. A slot does not necessarily occupy the entire frame. (A frame can be longer than the data word transmitted after the frame sync pulse.) Typically, a codec starts transmitting a fixed length data word (for example 8-bit log PCM data) with the frame sync signal, then the codec's transmit pin returns to the high-impedance state for the remainder of the frame

The Audio Receive Shift Register (ARSR) deserializes received on the SRD pin (serial receiver data). Only the data sampled after the frame sync signal are treated as valid. If the interface is interrupt-driven, valid data bits are transferred from the ARSR to the receive FIFO. If the interface is configured for DMA, the data is transferred to the receive DMA register 0 (ARDR0).

The serial transmit data (STD) pin is only an active output while data is shifted out. After the defined number of data bits have been shifted out, the STD pin returns to the high-impedance state.

Copyright © 2007–2013, Texas Instruments Incorporated

For operation in normal mode, the Slot Count Select bits (SCS[1:0]) in the Global Configuration Register (AGCR) must be loaded with 00b (one slot per frame). In addition, the Slot Assignment bits for receive and transmit must be programmed to select slot 0. In this case, the audio data is transferred to or from the receive or transmit DMA register 0 (ARDR0/ATDR0).

Figure 20-1 shows the frame timing while operating in normal mode with a long frame sync interval.

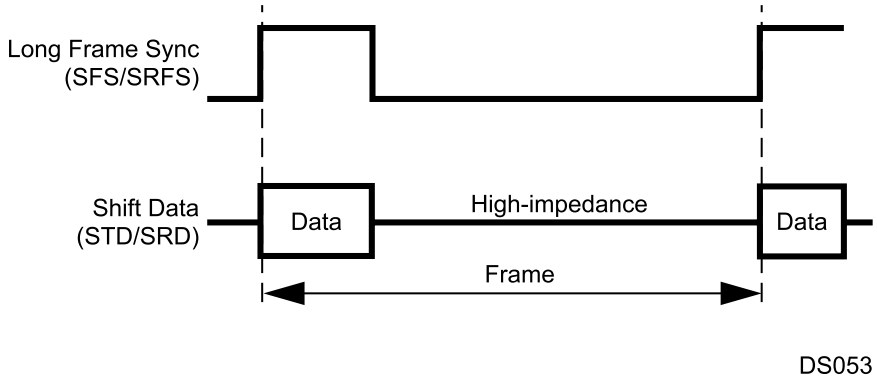

Figure 20-1. Normal Mode Frame

IRQ Support

If the receiver interface is configured for interrupt-driven I/O (RXDSA0 = 0), all received data are loaded into the receive FIFO. An IRQ is asserted as soon as the number of data bytes or words in the receive FIFO is greater than a programmable warning limit.

If the transmitter interface is configured for interrupt-driven I/O (TXDSA0 = 0), all data to be transmitted is read from the transmit FIFO. An IRQ is asserted as soon as the number of data bytes or words available in the transmit FIFO is equal or less than a programmable warning limit.

Copyright © 2007–2013, Texas Instruments Incorporated

DMA Support

If the receiver interface is configured for DMA (RXDSA0 = 1), received data is transferred from the ARSR into the DMA receive buffer 0 (ARDR0). A DMA request is asserted when the ARDR0 register is full. If the transmitter interface is configured for DMA (TXDSA0 = 1), data to be transmitted are read from the DMA transmit buffer 0 (ATDR0). A DMA request is asserted to the DMA controller when the ATDR0 register is empty.

Figure 20-2 shows the data flow for IRQ and DMA mode in normal Mode.

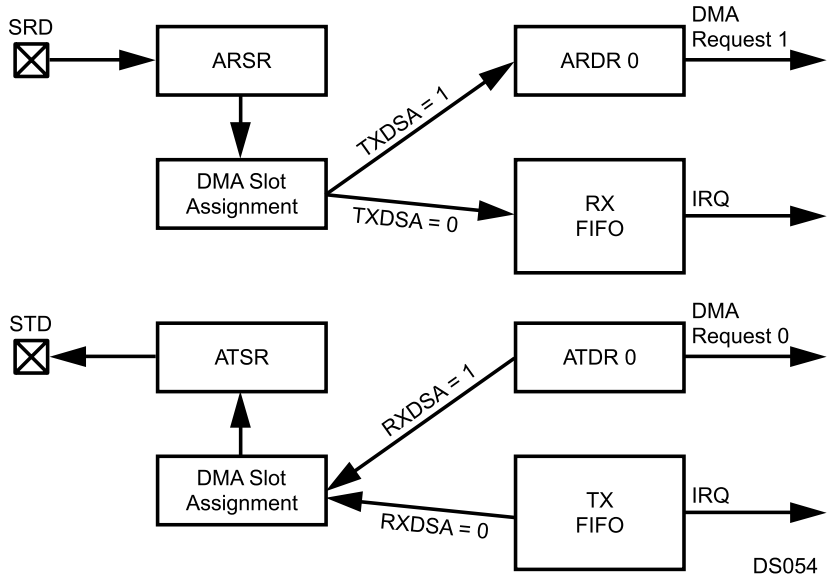

Figure 20-2. IRQ/DMA Support in Normal Mode

Network Mode

In network mode, each frame is composed of multiple slots. Each slot may transfer 8 or 16 bits. All of the slots in a frame must have the same length. In network mode, the sync signal marks the beginning of a new frame. Only frames with up to four slots are supported by this audio interface.

More than two devices can communicate within a network using the same clock and data lines. The devices connected to the same bus use a time-multiplexed approach to share access to the bus. Each device has certain slots assigned to it, in which only that device is allowed to transfer data. One master device provides the bit clock and the frame sync signal(s). On all other (slave) devices, the bit clock and frame sync pins are inputs.

Up to four slots can be assigned to the interface, as it supports up to four slots per frame. Any other slots within the frame are reserved for other devices.

The transmitter only drives data on the STD pin during slots which have been assigned to this interface. During all other slots, the STD output is in high-impedance mode, and data can be driven by other devices. The assignment of slots to the transmitter is specified by the Transmit Slot Assignment bits (TXSA) in the ATCR register. It can also be specified whether the data to be transmitted is transferred from the transmit FIFO or the corresponding DMA transmit register. There is one DMA transmit register (ATDRn) for each of the maximum four data slots. Each slot can be configured independently.

On the receiver side, only the valid data bits which were received during the slots assigned to this interface are copied into the receive FIFO or DMA registers. The assignment of slots to the receiver is specified by the Receive Slot Assignment bits (RXSA) in the ATCR register. It can also be specified whether the received data is copied into the receive FIFO or into the corresponding DMA receive register. There is one DMA receive register (ARDRn) for each of the maximum four data slots. Each slot may be configured individually.

Figure 20-3 shows the frame timing while operating in network mode with four slots per frame, slot 1 assigned to the interface, and a long frame sync interval.

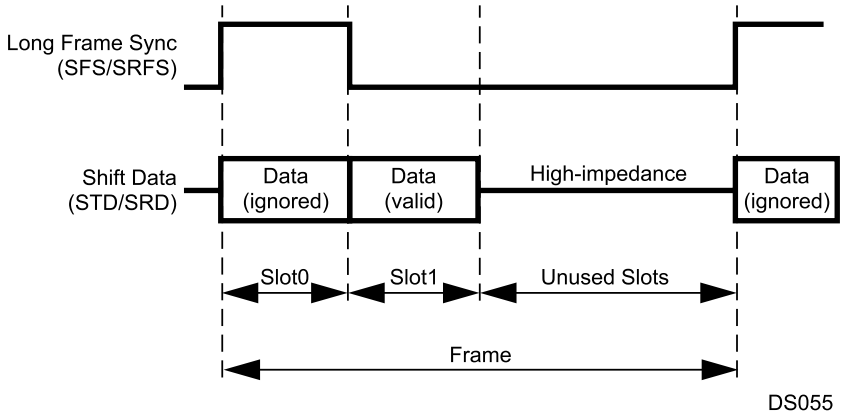

Figure 20-3. Network Mode Frame

IRQ Support

If DMA is not enabled for a receive slot n (RXDSAn = 0), all data received in this slot is loaded into the receive FIFO. An TX FIFO IRQ DS056 IRQ is asserted as soon as the number of data bytes or words in the receive FIFO is greater than a configured warning limit.

If DMA is not enabled for a transmit slot n (TXDSAn = 0), all data to be transmitted in this slot are read from the transmit FIFO. An IRQ is asserted as soon as the number data bytes or words available in the transmit FIFO is equal or less than a configured warning limit.

DMA Support

If DMA support is enabled for a receive slot n (RXDSA0 = 1), all data received in this slot is only transferred from the ARSR into the corresponding DMA receive register (ARDRn). A DMA request is asserted when the ARDRn register is full.

If DMA is enabled for a transmit slot n (TXDSAn = 1), all data to be transmitted in slot n are read from the corresponding DMA transmit register (ATDRn). A DMA request is asserted to the DMA controller when the ATDRn register is empty.

Copyright © 2007–2013, Texas Instruments Incorporated

Figure 20-4 illustrates the data flow for IRQ and DMA support in network mode, using four slots per frame and DMA support enabled for slots 0 and 1 in receive and transmit direction.

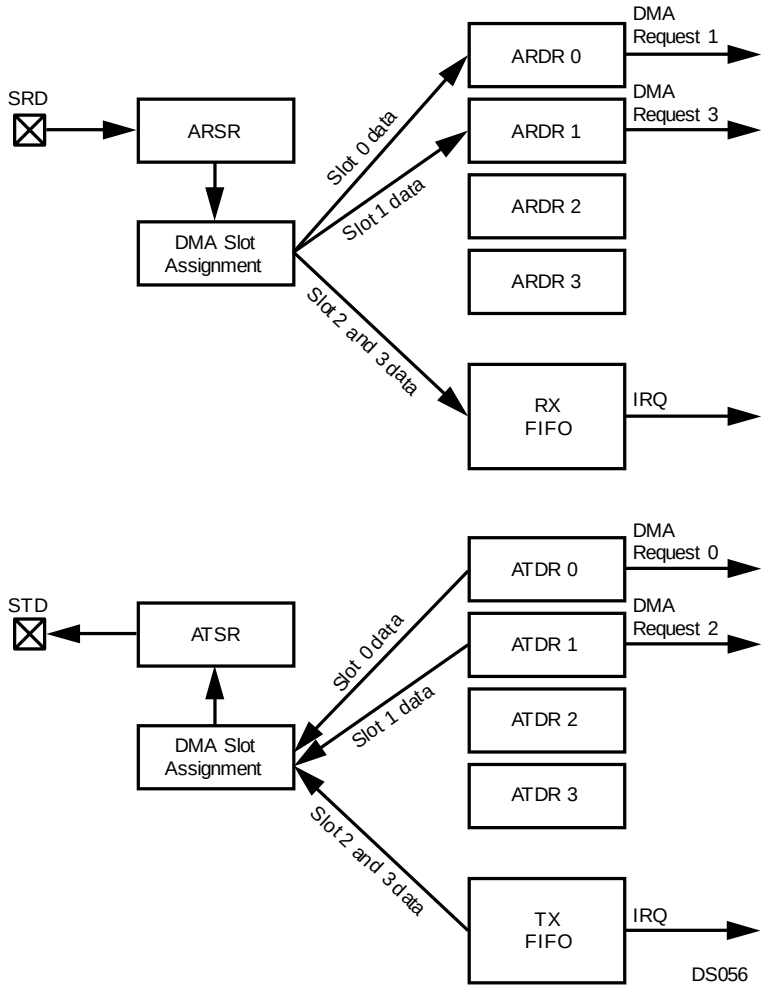

Figure 20-4. IRQ/DMA Support in Network Mode

If the interface operates in synchronous mode, the receiver uses the transmit bit clock (SCK) and transmit frame sync signal (SFS). This allows the pins used for the receive bit clock (SRCLK) and receive frame sync (SRFS) to be used as additional frame sync signals in network mode. The extra frame sync signals are useful when the audio interface communicates to more than one codec, because codecs typically start transmission immediately after the frame sync pulse. The SRCLK pin is driven with a frame sync pulse at the beginning of the second slot (slot 1), and the SRFS pin is driven with a frame sync pulse at the beginning of slot 2. Figure 20-5 shows a frame timing diagram for this configuration, using the additional frame sync signals on SRCLK and SRFS to address up to three devices.

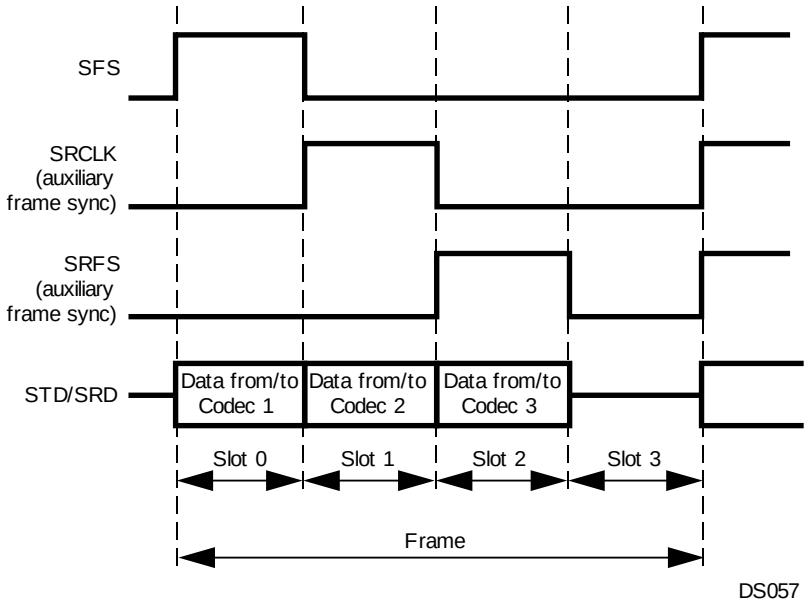

Figure 20-5. Accessing Three Devices in Network Mode

20.3 BIT CLOCK GENERATION

An 8-bit prescaler is provided to divide the audio interface input clock down to the required bit clock rate. Software can choose between two input clock sources, a primary and a secondary clock source.

On the CP3BT26, the two optional input clock sources are the 12-MHz Aux1 clock (also used for the Bluetooth LLC) and the 48-MHz PLL output clock (also used by the USB node). The input clock is divided by the value of the prescaler BCPRS[7:0] + 1 to generate the bit clock.

The bit clock rate f_{bit} can be calculated by the following equation:

$$f_{bit} = n \times f_{sample} \times \text{Data Length}$$

where

- n = Number of Slots per Frame
- f_{sample}= Sample Frequency in Hz
- Data Length = Length of data word in multiples of 8 bits (21)

The ideal required prescaler value P_{ideal} can be calculated as follows:

$$P_{ideal} = f_{AudioIn} / f_{bit} \quad (22)$$

The real prescaler must be set to an integer value, which should be as close as possible to the ideal prescaler value, to minimize the bit clock error, f_{bit_error}:

$$f_{bit\_error}[\%] = (f_{bit} - f_{Audioin} / P_{real}) / f\ bit \times 100 \quad (23)$$

Copyright © 2007–2013, Texas Instruments Incorporated

Example:

The audio interface is used to transfer 13-bit linear PCM data for one audio channel at a sample rate of 8k samples per second. The input clock of the audio interface is 12 MHz. Furthermore, the codec requires a minimum bit clock of 256 kHz to operate properly. Therefore, the number of slots per frame must be set to 2 (network mode) although actually only one slot (slot 0) is used. The codec and the audio interface will put their data transmit pins in TRI-STATE mode after the PCM data word has been transferred. The required bit clock rate f_{bit} can be calculated by the following equation:

$$f_{bit} = n \times f_{Sample} \times \text{Data Length} = 2 \times 8\ \text{kHz} \times 16 = 256\ \text{kHz} \quad (24)$$

The ideal required prescaler value P_{ideal} can be calculated as follows:

$$P_{ideal} = f_{Audio}\ \text{In} / f_{bit} = 12\ \text{MHz} / 256\ \text{kHz} = 46.875 \quad (25)$$

Therefore, the real prescaler value is 47. This results in a bit clock error equal to:

$$f_{bit\_error} = (f_{bit} - f_{Audio}\ \text{In}/P_{real}) / f_{bit} \times 100 \quad (26)$$

$$= (256\ \text{kHz} - 12\ \text{MHz}/47) / 256\ \text{kHz} \times 100 = 0.27\% \quad (27)$$

20.4 FRAME CLOCK GENERATION

The clock for the frame synchronization signals is derived from the bit clock of the audio interface. A 7-bit prescaler is used to divide the bit clock to generate the frame sync clock for the receive and transmit operations. The bit clock is divided by FCPRS + 1. In other words, the value software must write into the ACCR.FCPRS field is equal to the bit number per frame minus one. The frame may be longer than the valid data word but it must be equal to or larger than the 8- or 16-bit word. Even if 13-, 14-, or 15-bit data is being used, the frame width must always be at least 16 bits wide.

In addition, software can specify the length of a long frame sync signal. A long frame sync signal can be either 6, 13, 14, 15, or 16 bits long, depending on the external codec being used. The frame sync length can be configured by the Frame Sync Length field (FSL) in the AGCR register.

20.5 Audio Interface Operation

20.5.1 Clock Configuration

The Aux1 clock (generated by the Clock module described in Clock and Reset Registers) must be configured, because it is the time base for the AAI module. Software must write an appropriate divisor to the ACDIV1 field of the PRSAC register to provide a 12 MHz input clock. Software also must enable the Aux1 clock by setting the ACE1 bit in the CRCTRL register.

For example:

```
PRSAC &= 0xF0;

// Set Aux1 prescaler to 1 (F = 12 MHz) C

RCTRL |= ACE1; // Enable Aux1 clk
```

20.5.2 Interrupts

The interrupt logic of the AAI combines up to four interrupt sources and generates one interrupt request signal to the Interrupt Control Unit (ICU).

The four interrupt sources are:

- RX FIFO Overrun - ASCR.RXEIP = 1
- RX FIFO Almost Full (Warning Level) - ASCR.RXIP = 1
- TX FIFO Under run - ASCR.TXEIP = 1
- TX FIFO Almost Empty (Warning Level) - ASCR.TXIP=1

In addition to the dedicated input to the ICU for handling these interrupt sources, the Serial Frame Sync (SFS) signal is an input to the MIWU (see Multi-Input Wake-Up), which can be programmed to generate edge-triggered interrupts.

Figure 20-6 shows the interrupt structure of the AAI.

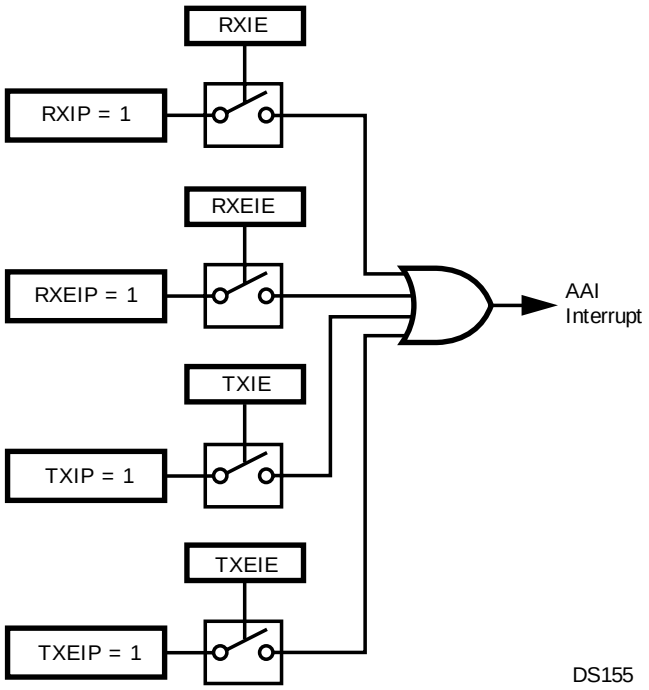

Figure 20-6. AAI Interrupt Structure

20.5.3 Normal Mode

In normal mode, each frame sync signal marks the beginning of a new frame and also the beginning of a new slot, since each frame only consists of one slot. All 16 receive and transmit FIFO locations hold data for the same (and only) slot of a frame. If 8-bit data are transferred, only the low byte of each 16-bit FIFO location holds valid data.

Copyright © 2007–2013, Texas Instruments Incorporated

20.5.4 Transmit

Once the interface has been enabled, transmit transfers are initiated automatically at the beginning of every frame. The beginning of a new frame is identified by a frame sync pulse. Following the frame sync pulse, the data is shifted out from the ATSR to the STD pin on the positive edge of the transmit data shift clock (SCK).

DMA Operation

When a complete data word has been transmitted through the STD pin, a new data word is reloaded from the transmit DMA register 0 (ATDR0). A DMA request is asserted when the ATDR0 register is empty. If a new data word must be transmitted while the ATDR0 register is still empty, the previous data will be re-transmitted.

FIFO Operation

When a complete data word has been transmitted through the STD pin, a new data word is loaded from the transmit FIFO from the current location of the Transmit FIFO Read Pointer (TRP). After that, the TRP is automatically incremented by 1..

A write to the Audio Transmit FIFO Register (ATFR) results in a write to the transmit FIFO at the current location of the Transmit FIFO Write Pointer (TWP). After every write operation to the transmit FIFO, TWP is automatically incremented by 1.

When the TRP is equal to the TWP and the last access to the FIFO was a read operation (a transfer to the ATSR), the transmit FIFO is empty. When an additional read operation from the FIFO to ATSR is performed (while the FIFO is already empty), a transmit FIFO underrun occurs. In this event, the read pointer (TRP) will be decremented by 1 (incremented by 15) and the previous data word will be transmitted again. A transmit FIFO underrun is indicated by the TXU bit in the Audio Interface Transmit Status and Control Register (ATSCR). Also, no transmit interrupt will be generated (even if enabled).

When the TRP is equal to the TWP and the last access to the FIFO was a write operation (to the ATFR), the FIFO is full. If an additional write to ATFR is performed, a transmit FIFO overrun occurs. This error condition is not prevented by hardware. Software must ensure that no transmit overrun occurs.

The transmit frame synchronization pulse on the SFS pin and the transmit shift clock on the SCK pin may be generated internally, or they can be supplied by an external source.

20.5.5 Receive

At the receiver, the received data on the SRD pin is shifted into ARSR on the negative edge of SRCLK (or SCK in synchronous mode), following the receive frame sync pulse, SRFS (or SFS in synchronous mode).

DMA Operation

When a complete data word has been received through the SRD pin, the new data word is copied to the receive DMA register 0 (ARDR0). A DMA request is asserted when the ARDR0 register is full. If a new data word is received while the ARDR0 register is still full, the ARDR0 register will be overwritten with the new data.

FIFO Operation

When a complete word has been received, it is transferred to the receive FIFO at the current location of the Receive FIFO Write Pointer (RWP). Then, the RWP is automatically incremented by 1.

A read from the Audio Receive FIFO Register (ARFR) results in a read from the receive FIFO at the current location of the Receive FIFO Read Pointer (RRP). After every read operation from the receive FIFO, the RRP is automatically incremented by 1.

When the RRP is equal to the RWP and the last access to the FIFO was a copy operation from the ARFR, the receive FIFO is full. When a new complete data word has been shifted into ARSR while the receive FIFO was already full, the shift register overruns. In this case, the new data in the ARSR will not be copied into the FIFO and the RWP will not be incremented. A receive FIFO overrun is indicated by the RXO bit in the Audio Interface Receive Status and Control Register (ARSCR). No receive interrupt will be generated (even if enabled).

When the RWP is equal to the RRP and the last access to the receive FIFO was a read from the ARFR, a receive FIFO underrun has occurred. This error condition is not prevented by hardware. Software must ensure that no receive underrun occurs.

The receive frame synchronization pulse on the SRFS pin (or SFS in synchronous mode) and the receive shift clock on the SRCLK (or SCK in synchronous mode) may be generated internally, or they can be supplied by an external source.

Copyright © 2007–2013, Texas Instruments Incorporated

20.5.6 Network Mode

In network mode, each frame sync signal marks the beginning of new frame. Each frame can consist of up to four slots. The audio interface operates in a similar way to normal mode, however, in network mode the transmitter and receiver can be assigned to specific slots within each frame as described below.

20.5.7 Transmit

The transmitter only shifts out data during the assigned slot. During all other slots the STD output is in TRI-STATE mode.

DMA Operation

When a complete data word has been transmitted through the STD pin, a new data word is reloaded from the corresponding transmit DMA register n (ATDRn). A DMA request is asserted when ATDRn is empty. If a new data word must be transmitted in a slot n while ATDRn is still empty, the previous slot n data will be retransmitted.

FIFO Operation

When a complete data word has been transmitted through the STD pin, a new data word is reloaded from the transmit FIFO from the current location of the Transmit FIFO Read Pointer (TRP). After that, the TRP is automatically incremented by 1. Therefore, the audio data to be transmitted in the next slot of the frame is read from the next FIFO location.

A write to the Audio Transmit FIFO Register (ATFR) results in a write to the transmit FIFO at the current location of the Transmit FIFO Write Pointer (TWP). After every write operation to the transmit FIFO, the TWP is automatically incremented by 1.

When the TRP is equal to the TWP and the last access to the FIFO was a read operation (transfer to the ATSR), the transmit FIFO is empty. When an additional read operation from the FIFO to the ATSR is performed (while the FIFO is already empty), a transmit FIFO underrun occurs. In this case, the read pointer (TRP) will be decremented by 1 (incremented by 15) and the previous data word will be transmitted again. A transmit FIFO underrun is indicated by the TXU bit in the Audio Interface Transmit Status and Control Register (ATSCR). No transmit interrupt will be generated (even if enabled).

If the current TRP is equal to the TWP and the last access to the FIFO was a write operation (to the ATFR), the FIFO is full. If an additional write to the ATFR is performed, a transmit FIFO overrun occurs. This error condition is not prevented by hardware. Software must ensure that no transmit overrun occurs.

DMA Operation

When a complete data word has been received through the SRD pin in a slot n, the new data word is transferred to the corresponding receive DMA register n (ARDRn). A DMA request is asserted when the ARDRn register is full. If a new slot n data word is received while the ARDRn register is still full, the ARDRn register will be overwritten with the new data.

20.6 COMMUNICATION OPTIONS

20.6.1 Data Word Length

The word length of the audio data can be selected to be either 8 or 16 bits. In 16-bit mode, all 16 bits of the transmit and receive shift registers (ATSR and ARSR) are used. In 8- bit mode, only the lower 8 bits of the transmit and receive shift registers (ATSR and ARSR) are used.

Copyright © 2007–2013, Texas Instruments Incorporated

20.6.2 Frame Sync Signal

The audio interface can be configured to use either long or short frame sync signals to mark the beginning of a new data frame. If the corresponding Frame Sync Select (FSS) bit in the Audio Control and Status register is clear, the receive and/or transmit path generates or recognizes short frame sync pulses with a length of one bit shift clock period. When these short frame sync pulses are used, the transfer of the first data bit or the first slot begins at the first positive edge of the shift clock after the negative edge on the frame sync pulse.

If the corresponding Frame Sync Select (FSS) bit in the Audio Control and Status register is set, the receive and/or transmit path generates or recognizes long frame sync pulses. For 8-bit data, the frame sync pulse generated will be 6 bit shift clock periods long, and for 16-bit data the frame sync pulse can be configured to be 13, 14, 15, or 16 bit shift clock periods long. When receiving frame sync, it should be active on the first bit of data and stay active for a least two bit clock periods. It must go low for at least one bit clock period before starting a new frame. When long frame sync pulses are used, the transfer of the first word (first slot) begins at the first positive edge of the bit shift clock after the positive edge of the frame sync pulse. Figure 20-7 shows examples of short and long frame sync pulses.

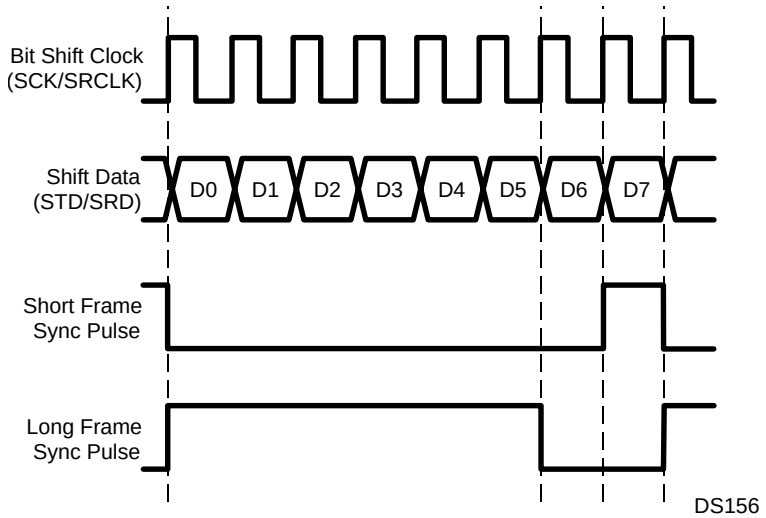

Figure 20-7. Short and Long Frame Sync Pulses

Some codecs require an inverted frame sync signal. This is available by setting the Inverted Frame Sync bit in the AGCR register.

Copyright © 2007–2013, Texas Instruments Incorporated

20.6.3 Audio Control Data

The audio interface provides the option to fill a 16-bit slot with up to three data bits if only 13, 14, or 15 PCM data bits are transmitted. These additional bits are called audio control data and are appended to the PCM data stream. The AAI can be configured to append either 1, 2, or 3 audio control bits to the PCM data stream. The number of audio data bits to be used is specified by the 2-bit Audio Control On (ACO) field. If the ACO field is not equal to 0, the specified number of bits are taken from the Audio Control Data field (ACD) and appended to the data stream during every transmit operation. The ADC0 bit is the first bit added to the transmit data stream after the last PCM data bit. Typically, these bits are used for gain control, if this feature is supported by the external PCM codec. Figure 20-8 shows a 16-bit slot Shift Data (STD/SRD) D0 D1 D2 D3 D4 D5 D6 D7 comprising a 13-bit PCM data word plus three audio control bits.

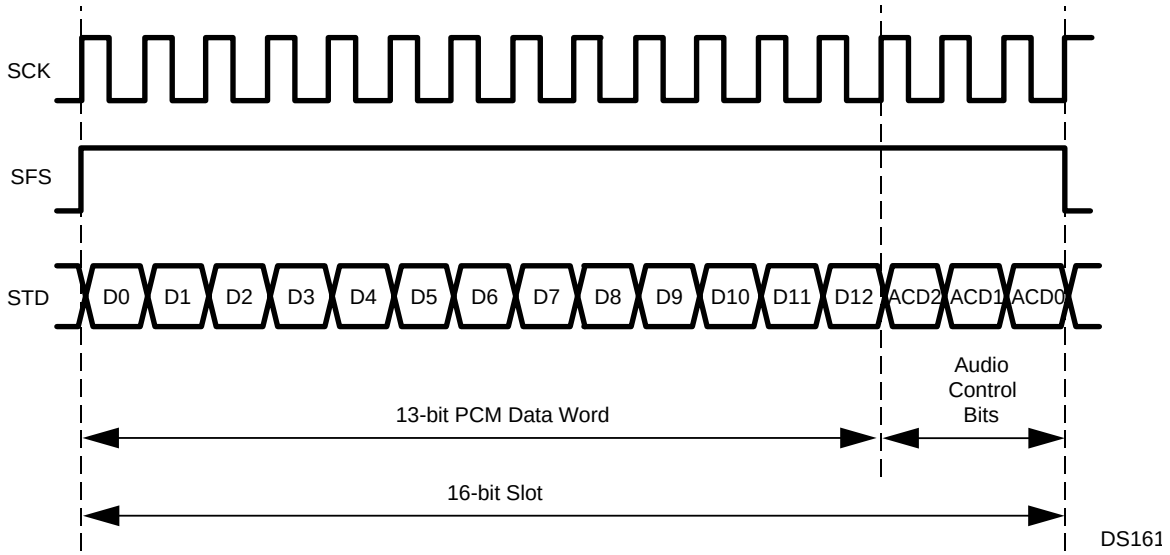

Figure 20-8. Audio Slot with Audio Control Data

20.6.4 IOM-2 Mode

The AAI can operate in a special IOM-2 compatible mode to allow to connect to an external ISDN controller device. In this IOM-2 mode, the AAI can only operate as a slave, that is the bit clock and frame sync signal is provided by the ISDN controller. The AAI only supports the B1 and B2 data of the IOM-2 channel 0, but ignores the other two IOM-2 channels. The AAI handles the B1 and B2 data as one 16-bit data word.

The IOM-2 interface has the following properties:

- Bit clock of 1536 kHz (output from the ISDN controller)
- Frame repetition rate of 8 ksps (output from the ISDN controller)
- Double-speed bit clock (one data bit is two bit clocks wide)
- B1 and B2 data use 8-bit log PCM format
- Long frame sync pulse

Figure 20-9 shows the structure of an IOM-2 Frame.

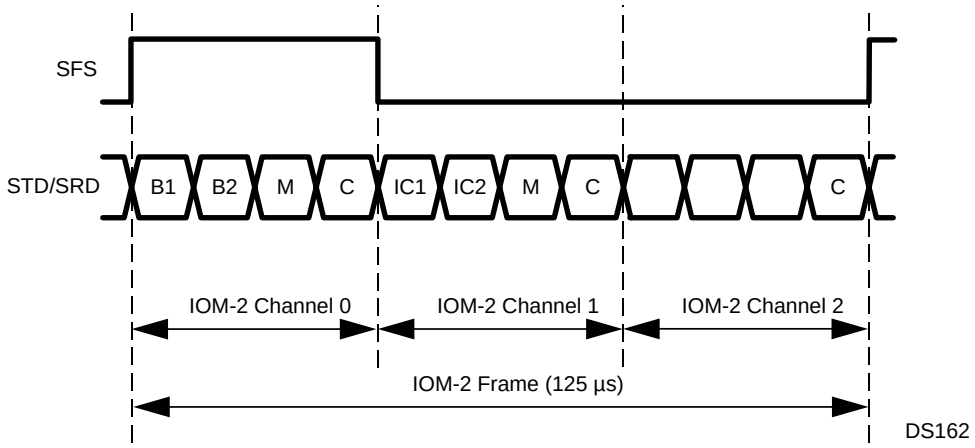

Figure 20-9. IOM-2 Frame Structure

Copyright © 2007–2013, Texas Instruments Incorporated

Figure 20-10 shows the connections between an ISDN controller and a CP3BT26 using a standard IOM-2 interface for the B1/B2 data communication and the external bus interface (IO Expansion) for controlling the ISDN controller.

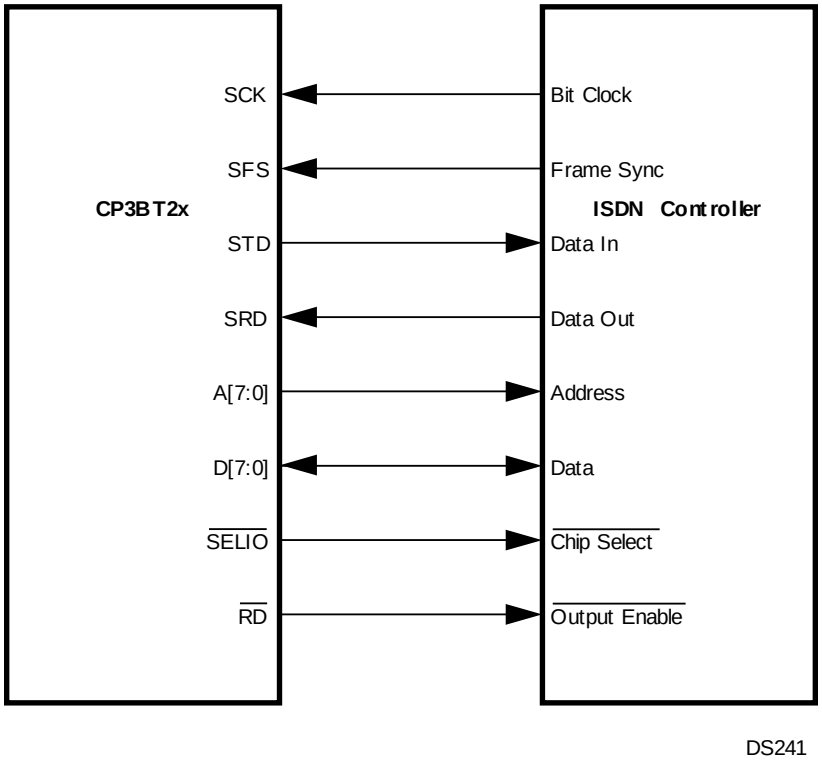

Figure 20-10. CP3BT26/ISDN Controller Connections

To connect the AAI to an ISDN controller through an IOM-2 compatible interface, the AAI needs to be configured in this way:

- The AAI must be in IOM-2 Mode (AGCR.IOM2 = 1).
- The AAI operates in synchronous mode (AGCR.ASS = 0).
- The AAI operates as a slave, therefore the bit clock and frame sync source selection must be set to external (ACGR.IEFS = 1, ACGR.IEBC = 1).
- The frame sync length must be set to long frame sync (ACGR.FSS = 1).
- The data word length must be set to 16-bit (AGCR.DWL = 1).
- The AAI must be set to normal mode (AGCR.SCS[1:0] = 0).
- The internal frame rate must be 8 ksps (ACCR = 00BE).

20.6.5 Loopback Mode

In loopback mode, the STD and SRD pins are internally connected together, so data shifted out through the ATSR register will be shifted into the ARSR register. This mode may be used for development, but it also allows testing the transmit and receive path without external circuitry, for example during Built-In-Self-Test (BIST).

20.6.6 Freeze Mode

The audio interface provides a FREEZE input, which allows to freeze the status of the audio interface while a development system examines the contents of the FIFOs and registers.

When the FREEZE input is asserted, the audio interface behaves as follows:

- The receive FIFO or receive DMA registers are not updated with new data.
- The receive status bits (RXO, RXE, RXF, and RXAF) are not changed, even though the receive FIFO or receive DMA registers are read.
- The transmit shift register (ATSR) is not updated with new data from the transmit FIFO or transmit DMA registers.
- The transmit status bits (TXU, TXF, TXE, and TXAE) are not changed, even though the transmit FIFO or transmit DMA registers are written.

The time at which these registers are frozen will vary because they operate from a different clock than the one used to generate the freeze signal.

20.7 AUDIO INTERFACE REGISTERS

Table 20-1. Audio Interface Registers

Name	Address	Description
ARFR	FF FD40h	Audio Receive FIFO Register
ARDR0	FF FD42h	Audio Receive DMA Register 0
ARDR	FF FD44h	Audio Receive DMA Register 1
ARDR2	FF FD46h	Audio Receive DMA Register 2
ARDR3	FF FD48h	Audio Receive DMA Register 3
ATFR	FF FD4Ah	Audio Transmit FIFO Register
ATDR0	FF FD4Ch	Audio Transmit DMA Register 0
ATDR	FF FD4Eh	Audio Transmit DMA Register 1
ATDR2	FF FD50h	Audio Transmit DMA Register 2
ATDR3	FF FD52h	Audio Transmit DMA Register 3
AGCR	FF FD54h	Audio Global Configuration Register
AISCR	FF FD56h	Audio Interrupt Status and Control Register
ARSCR	FF FD58h	Audio Receive Status and Control Register
ATSCR	FF FD5Ah	Audio Transmit Status and Control Register
ACCR	FF FD5Ch	Audio Clock Control Register
ADMACR	FF FD5Eh	Audio DMA Control Register

Copyright © 2007–2013, Texas Instruments Incorporated

20.7.1 Audio Receive FIFO Register (ARFR)

The Audio Receive FIFO register shows the receive FIFO location currently addressed by the Receive FIFO Read Pointer (RRP). The receive FIFO receives 8-bit or 16-bit data from the Audio Receive Shift Register (ARSR), when the ARSR is full.

In 8-bit mode, only the lower byte of the ARFR is used, and the upper byte contains undefined data. In 16-bit mode, a 16-bit word is copied from ARSR into the receive FIFO. The CPU bus master has read-only access to the receive FIFO, represented by the ARFR register. After reset, the receive FIFO (ARFR) contains undefined data.

7		0
	ARFL	

15		8
	ARFH	

ARFL	The Audio Receive FIFO Low Byte shows the lower byte of the receive FIFO location currently addressed by the Receive FIFO Read Pointer (RRP).
ARFH	The Audio Receive FIFO High Byte shows the upper byte of the receive FIFO location currently addressed by the Receive FIFO Read Pointer (RRP). In 8-bit mode, ARFH contains undefined data.

20.7.2 Audio Receive DMA Register n (ARDRn)

The ARDRn register contains the data received within slot n, assigned for DMA support. In 8-bit mode, only the lower 8-bit portion of the ARDRn register is used, and the upper byte contains undefined data. In 16-bit mode, a 16-bit word is transferred from the Audio Receive Shift Register (ARSR) into the ARDRn register. The CPU bus master, typically a DMA controller, has read-only access to the receive DMA registers. After reset, these registers are clear.

7		0
	ARDL	

15		8
	ARDH	

ARDL	The Audio Receive DMA Low Byte field receives the lower byte of the audio data copied from the ARSR.
ARDH	In 16-bit mode, the Audio Receive DMA High Byte field receives the upper byte of the audio data word copied from ARSR. In 8-bit mode, the ARDH register holds undefined data.

20.7.3 Audio Transmit FIFO Register (ATFR)

The ATFR register shows the transmit FIFO location currently addressed by the Transmit FIFO Write Pointer (TWP). The Audio Transmit Shift Register (ATSR) receives 8-bit or 16-bit data from the transmit FIFO, when the ATSR is empty. In 8-bit mode, only the lower 8-bit portion of the ATSR is used, and the upper byte is ignored (not transferred into the ATSR). In 16-bit mode, a 16-bit word is copied from the transmit FIFO into the ATSR. The CPU bus master has write-only access to the transmit FIFO, represented by the ATFR register. After reset, the transmit FIFO (ATFR) contains undefined data.

7							0
ATFL							

15							8
ATFH							

ATFL	The Audio Transmit Low Byte field represents the lower byte of the transmit FIFO location currently addressed by the Transmit FIFO Write Pointer (TWP).
ATFH	In 16-bit mode, the Audio Transmit FIFO High Byte field represents the upper byte of the transmit FIFO location currently addressed by the Transmit FIFO Write Pointer (TWP). In 8- bit mode, the ATFH field is not used.

20.7.4 Audio Transmit DMA Register n (ATDRn)

The ATDRn register contains the data to be transmitted in slot n, assigned for DMA support. In 8-bit mode, only the lower 8-bit portion of the ATDRn register is used, and the upper byte is ignored (not transferred into the ATSR). In 16-bit mode, the whole 16-bit word is transferred into the ATSR. The CPU bus master, typically a DMA controller, has write-only access to the transmit DMA registers. After reset, these registers are clear.

7							0
ATDL							

15							8
ATDH							

ATDL	The Audio Transmit DMA Low Byte field holds the lower byte of the audio data.
ATDH	In 16-bit mode, the Audio Transmit DMA High Byte field holds the upper byte of the audio data word. In 8-bit mode, the ATDH field is ignored.

Copyright © 2007–2013, Texas Instruments Incorporated

20.7.5 Audio Global Configuration Register (AGCR)

The AGCR register controls the basic operation of the interface. The CPU bus master has read/write access to the AGCR register. After reset, this register is clear.

7	6	5	4	3	2	1	0
IEBC	FSS	IEFS	SCS		LPB	DWL	ASS

15	14	13	12	11	10	9	8
CLKEN	AAIEN	IOM2	IFS	FSL		CTF	CRF

ASS — The Asynchronous/Synchronous Mode Select bit controls whether the audio interface operates in Asynchronous or in Synchronous mode. After reset the ASS bit is clear, so the Synchronous mode is selected by default.
0 – Synchronous mode.
1 – Asynchronous mode.

DWL — The Data Word Length bit controls whether the transferred data word has a length of 8 or 16 bits. After reset, the DWL bit is clear, so 8-bit data words are used by default.
0 – 8-bit data word length.
1 – 16-bit data word length.

LPB — The Loop Back bit enables the loop back mode. In this mode, the SRD and STD pins are internally connected. After reset the LPB bit is clear, so by default the loop back mode is disabled.
0 – Loop back mode disabled.
1 – Loop back mode enabled.

SCS — The Slot Count Select field specifies the number of slots within each frame. If the number of slots per frame is equal to 1, the audio interface operates in normal mode. If the number of slots per frame is greater than 1, the interface operates in network mode. After reset all SCS bits are cleared, so by default the audio interface operates in normal mode.

SCS	Number of Slots per Frame	Mode
00	1	Normal mode
01	2	Network mode
10	3	Network mode
11	4	Network mode

IEFS — The Internal/External Frame Sync bit controls, whether the frame sync signal for the receiver and transmitter are generated internally or provided from an external source. After reset, the IEFS bit is clear, so the frame synchronization signals are generated internally by default.
0 – Internal frame synchronization signal.
1 – External frame synchronization signal.

FSS — The Frame Sync Select bit controls whether the interface (receiver and transmitter) uses long or short frame synchronization signals. After reset the FSS bit is clear, so short frame synchronization signals are used by default.
0 – Short (bit length) frame synchronization signal.
1 – Long (word length) frame synchronization signal.

IEBC — The Internal/External Bit Clock bit controls whether the bit clocks for receiver and transmitter are generated internally or provided from an external source. After reset, the IEBC bit is clear, so the bit clocks are generated internally by default.
0 – Internal bit clock.
1 – External bit clock.

CRF — The Clear Receive FIFO bit is used to clear the receive FIFO. When this bit is written with a 1, all pointers of the receive FIFO are set to their reset state. After updating the pointers, the CRF bit will automatically be cleared again.
0 – Writing 0 has no effect.
1 – Writing 1 clears the receive FIFO.

CTF — The Clear Transmit FIFO bit is used to clear the transmit FIFO. When this bit is written with a 1, all pointers of the transmit FIFO are set to their reset state. After updating the pointers, the CTF bit will automatically be cleared again.
0 – Writing 0 has no effect.
1 – Writing 1 clears the transmit FIFO.

FSL — The Frame Sync Length field specifies the length of the frame synchronization signal, when a long frame sync signal (FSS = 1) and a 16-bit data word length (DWL = 1) are used. If an 8-bit data word length is used, long frame syncs are always 6 bit clocks in length.

FSL	Frame Sync Length
00	13 bit clocks
01	14 bit clocks
10	15 bit clocks
11	16 bit clocks

Copyright © 2007–2013, Texas Instruments Incorporated

IFS	The Inverted Frame Sync bit controls the polarity of the frame sync signal. 0 – Active-high frame sync signal. 1 – Active-low frame sync signal.
IOM2	The IOM-2 Mode bit selects the normal PCM interface mode or a special IOM-2 mode used to connect to external ISDN controller devices. The AAI can only operate as a slave in the IOM-2 mode, that is the bit clock and frame sync signals are provided by the ISDN controller. If the IOM2 bit is clear, the AAI operates in the normal PCM interface mode used to connect to external PCM codecs and other PCM audio devices. 0 – IOM-2 mode disabled. 1 – IOM-2 mode enabled.
AAIEN	The AAI Enable bit controls whether the Advanced Audio Interface is enabled. All AAI registers provide read/write access while (CLKEN = 1) AAIEN is clear. The AAIEN bit is clear after reset. 0 – AAI module disabled. 1 – AAI module enabled.
CLKEN	The Clock Enable bit controls whether the Advanced Audio Interface clock is enabled. The CLKEN bit must be set to allow access to any AAI register. It must also be set before any other bit of the AGCR can be set. The CLKEN bit is clear after reset. 0 – AAI module clock disabled. 1 – AAI module clock enabled.

Copyright © 2007–2013, Texas Instruments Incorporated

20.7.6 Audio Interrupt Status and Control Register (AISCR)

The ASCR register is used to specify the source and the conditions, when the audio interface interrupt is asserted to the Interrupt Control Unit. It also holds the interrupt pending bits and the corresponding interrupt clear bits for each audio interface interrupt source. The CPU bus master has read/ write access to the ASCR register. After reset, this register is clear.

7	6	5	4	3	2	1	0
TXEIP	TXIP	RXEIP	RXIP	TXEIE	TXIE	RXEIE	RXIE

15	12	11	10	9	8
Reserved		TXEIC	TXIC	RXEIC	RXIC

RXIE — The Receive Interrupt Enable bit controls whether receive interrupts are generated. If the RXIE bit is clear, no receive interrupt will be generated.
0 – Receive interrupt disabled.
1 – Receive interrupt enabled.

RXEIE — The Receive Error Interrupt Enable bit controls whether receive error interrupts are generated. Setting this bit enables a receive error interrupt, when the Receive Buffer Overrun (RXOR) bit is set. If the RXEIE bit is clear, no receive error interrupt will be generated.
0 – Receive error interrupt disabled.
1 – Receive error interrupt enabled.

TXIE — The Transmit Interrupt Enable bit controls whether transmit interrupts are generated. Setting this bit enables a transmit interrupt, when the Transmit Buffer Almost Empty (TXAE) bit is set. If the TXIE bit is clear, no interrupt will be generated.
0 – Transmit interrupt disabled.
1 – Transmit interrupt enabled.

TXEIE — The Transmit Error Interrupt Enable bit controls whether transmit error interrupts are generated. Setting this bit to 1 enables a transmit error interrupt, when the Transmit Buffer Underrun (TXUR) bit is set. If the TXEIE bit is clear, no transmit error interrupt will be generated.

RXIP — The Receive Interrupt Pending bit indicates that a receive interrupt is currently pending. The RXIP bit is cleared by writing a 1 to the RXIC bit. The RXIP bit provides read-only access.
0 – No receive interrupt pending.
1 – Receive interrupt pending.

RXEIP — The Receive Error Interrupt Pending bit indicates that a receive error interrupt is currently pending. The RXEIP bit is cleared by writing a 1 to the RXEIC bit. The RXEIP bit provides read-only access.
0 – No receive error interrupt pending.
1 – Receive error interrupt pending.

TXIP — The Transmit Interrupt Pending bit indicates that a transmit interrupt is currently pending. The TXIP bit is cleared by writing a 1 to the TXIC bit. The TXIP bit provides read-only access.
0 – No transmit interrupt pending.
1 – Transmit interrupt pending.

TXEIP — Transmit Error Interrupt Pending. This bit indicates that a transmit error interrupt is currently pending. The TXEIP bit is cleared by software by writing a 1 to the TXEIC bit. The TXEIP bit provides read-only access.
0 – No transmit error interrupt pending.
1 – Transmit error interrupt pending.

RXIC — The Receive Interrupt Clear bit is used to clear the RXIP bit.
0 – Writing a 0 to the RXIC bit is ignored.
1 – Writing a 1 clears the RXIP bit.

RXEIC — The Receive Error Interrupt Clear bit is used to clear the RXEIP bit.
0 – Writing a 0 to the RXEIC bit is ignored.
1 – Writing a 1 clears the RXEIP bit.

TXIC — The Transmit Interrupt Clear bit is used to clear the TXIP bit.
0 – Writing a 0 to the TXIC bit is ignored.
1 – Writing a 1 clears the TXIP bit.

TXEIC — The Transmit Error Interrupt Clear bit is used to clear the TXEIP bit.
0 – Writing a 0 to the TXEIC bit is ignored.
1 – Writing a 1 clears the TXEIP bit.

Copyright © 2007–2013, Texas Instruments Incorporated

20.7.7 Audio Receive Status and Control Register (ARSCR)

The ARSCR register is used to control the operation of the receiver path of the audio interface. It also holds bits which report the current status of the receive FIFO. The CPU bus master has read/write access to the ASCR register. At reset, this register is loaded with 0004h.

7 – 4	3	2	1	0
RXSA	RXO	RXE	RXF	RXAF

15 – 12	11 – 8
RXFWL	RXDSA

RXAF The Receive Buffer Almost Full bit is set when the number of data bytes/words in the receive buffer is equal to the specified warning limit. 0 – Receive FIFO below warning limit.
1 – Receive FIFO is almost full.

RXF The Receive Buffer Full bit is set when the receive buffer is full. The RXF bit is set when the RWP is equal to the RRP and the last access was a write to the FIFO.
0 – Receive FIFO is not full.
1 – Receive FIFO full.

RXE The Receive Buffer Empty bit is set when the the RRP is equal to the RWP and the last access to the FIFO was a read operation (read from ARDR).
0 – Receive FIFO is not empty.
1 – Receive FIFO is empty.

RXO The Receive Overflow bit indicates that a receive shift register has overrun. This occurs, when a completed data word has been shifted into ARSR, while the receive FIFO was already full (the RXF bit was set). In this case, the new data in ARSR will not be copied into the FIFO and the RWP will not be incremented. Also, no receive interrupt and DMA request will generated (even if enabled).
0 – No overflow has occurred.
1 – Overflow has occurred.

RXSA The Receive Slot Assignment field specifies which slots are recognized by the receiver of the audio interface. Multiple slots may be enabled. If the frame consists of less than 4 slots, the RXSA bits for unused slots are ignored. For example, if a frame only consists of 2 slots, RXSA bits 2 and 3 are ignored.

The following table shows the slot assignment scheme.

RXSA Bit	Slots Enabled
RXSA0	0
RXSA1	1
RXSA2	2
RXSA3	3

After reset the RXSA field is clear, so software must load the correct slot assignment.

RXDSA The Receive DMA Slot Assignment field specifies which slots (audio channels) are supported by DMA. If the RXDSA bit is set for an assigned slot n (RXSAn = 1), the data received within this slot will not be transferred into the receive FIFO, but will instead be written into the corresponding Receive DMA data register (ARDRn). A DMA request n is asserted, when the ARDRn is full and if the RMA bit n is set. If the RXSD bit for a slot is clear, the RXDSA bit is ignored. The following table shows the DMA slot assignment scheme.

RXSA Bit	Slots Enabled for DMA
RXDSA0	0
RXDSA1	1
RXDSA2	2
RXDSA3	3

RXFWL The Receive FIFO Warning Level field specifies when a receive interrupt is asserted. A receive interrupt is asserted, when the number of bytes/words in the receive FIFO is greater than the warning level value. An RXFWL value of 0 means that a receive interrupt is asserted if one or more bytes/words are in the RX FIFO. After reset, the RXFWL bit is clear.

Copyright © 2007–2013, Texas Instruments Incorporated

20.7.8 Audio Transmit Status and Control Register (ATSCR)

The ASCR register controls the basic operation of the interface. It also holds bits which report the current status of the audio communication. The CPU bus master has read/write access to the ASCR register. At reset, this register is loaded with F003h.

7 – 4	3	2	1	0
TXSA	TXU	TXF	TXE	TXAE

15 – 12	11 – 8
TXFWL	TXDSA

TXAE — The Transmit FIFO Almost Empty bit is set when the number of data bytes/words in transmit buffer is equal to the specified warning limit.
0 – Transmit FIFO above warning limit.
1 – Transmit FIFO at or below warning limit.

TXE — The Transmit FIFO Empty bit is set when the transmit buffer is empty. The TXE bit is set to one every time the TRP is equal to the TWP and the last access to the FIFO was read operation (into ATSR).
0 – Transmit FIFO not empty.
1 – Transmit FIFO empty.

TXF — The Transmit FIFO Full bit is set when the TWP is equal to the TRP and the last access to the FIFO was write operation (write to ATDR).
0 – Transmit FIFO not full.
1 – Transmit FIFO full.

TXU — The Transmit Underflow bit indicates that the transmit shift register (ATSR) has underrun. This occurs when the transmit FIFO was already empty and a complete data word has been transferred. In this case, the TRP will be decremented by 1 and the previous data will be retransmitted. No transmit interrupt and no DMA request will be generated (even if enabled).
0 – Transmit underrun occurred.
1 – Transmit underrun did not occur.

TXSA — The Transmit Slot Assignment field specifies during which slots the transmitter is active and drives data through the STD pin. The STD pin is in high impedance state during all other slots. If the frame consists of less than 4 slots, the TXSA bits for unused slots are ignored. For example, if a frame only consists of 2 slots, TXSA bits 2 and 3 are ignored. The following table shows the slot assignment scheme.

TXSA Bit	Slots Enabled
TXSA0	0
TXSA11	1
TXSA2	2
TXSA3	3

After reset, the TXSA field is clear, so software must load the correct slot assignment.

TXDSA — The Transmit DMA Slot Assignment field specifies which slots (audio channels) are supported by DMA. If the TXDSA bit is set for an assigned slot n (TXSAn = 1), the data to be transmitted within this slot will not be read from the transmit FIFO, but will instead be read from the corresponding Transmit DMA data register (ATDRn). A DMA request n is asserted when the ATDRn is empty. If the TSA bit for a slot is clear, the TXDSA bit is ignored. The following table shows the DMA slot assignment scheme.

TXDSA Bit	**Slots Enabled for DMA**
TXDSA0	0
TXDSA11	1
TXDSA2	2
TXSDA3	3

TFWL — The Transmit FIFO Warning Level field specifies when a transmit interrupt is asserted. A transmit interrupt is asserted when the number of bytes or words in the transmit FIFO is equal or less than the warning level value. A TXFWL value of Fh means that a transmit interrupt is asserted if one or more bytes or words are available in the transmit FIFO. At reset, the TXFWL field is loaded with Fh.

20.7.9 Audio Clock Control Register (ACCR)

The ACCR register is used to control the bit timing of the audio interface. After reset, this register is clear.

7 … 1	0
FCPRS	CSS

15 … 8
BCPRS

CSS	The Clock Source Select bit selects one out of two possible clock sources for the audio interface. After reset, the CSS bit is clear. 0 – The Auxiliary Clock 1 is used to clock the Audio Interface. 1 – The 48-MHz USB clock is used to clock the Audio Interface.
FCPRS	The Frame Clock Prescaler is used to divide the bit clock to generate the frame clock for the receive and transmit operations. The bit clock is divided by (FCPRS + 1). After reset, the FCPRS field is clear. The maximum allowed bit clock rate to achieve an 8 kHz frame clock is 1024 kHz. This value must be set correctly even if the frame sync is generated externally.
BCPRS	The Bit Clock Prescaler is used to divide the audio interface clock (selected by the CSS bit) to generate the bit clock for the receive and transmit operations. The audio interface input clock is divided by (BCPRS + 1). After reset, the BCPRS[7:0] bits are clear.

After reset, the TXSA field is clear, so software must load the correct slot assignment.

Copyright © 2007–2013, Texas Instruments Incorporated

20.7.10 Audio DMA Control Register (ADMACR)

The ADMACR register is used to control the DMA support of the audio interface. In addition, it is used to configure the automatic transmission of the audio control bits. After reset, this register is clear.

7 – 4	3 – 0
TMD	RMD

15 – 13	12 – 11	10 – 8
Reserved	ACO	ACD

RMD — The Receive Master DMA field specify which slots (audio channels) are supported by DMA, that is, when a DMA request is asserted to the DMA controller. If the RMDn bit is set for an assigned slot n (RXDSAn = 1), a DMA request n is asserted, when the ARDRn is full. If the RXDSAn bit for a slot is clear, the RMDn bit is ignored. The following table shows the receive DMA request scheme.

RMD	DMA Request Condition
0000	None
000	ATDR0 empty
0010	ATDR1 empty
0011	ATDR0 empty or ATDR1 empty
x1xx	Not supported on CP3BT26
1xxx	

TMD — The Transmit Master DMA field specifies which slots (audio channels) are supported by DMA, that is when a DMA request is asserted to the DMA controller. If the TMD bit is set for an assigned slot n (TXDSAn = 1), a DMA request n is asserted, when the ATDRn register is empty. If the TXDSA bit for a slot is clear, the TMD bit is ignored. The following table shows the transmit DMA request scheme.

TMD	DMA Request Condition
0000	None
000	ATDR0 empty
0010	ATDR1 empty
0011	ATDR0 empty or ATDR1 empty
x1xx	Not supported on CP3BT26
1xxx	

ACD — The Audio Control Data field is used to fill the remaining bits of a 16-bit slot if only 13, 14, or 15 bits of PCM audio data are transmitted.

ACO — The Audio Control Output field controls the number of control bits appended to the PCM data word.
00 – No Audio Control bits are appended.
01 – Append ACD0.
10 – Append ACD1:0.
11 – Append ACD2:0.

21 CVSD/PCM CONVERSION MODULE

The CVSD/PCM module performs conversion between CVSD data and PCM data, in which the CVSD encoding is as defined in the Bluetooth specification and the PCM encoding may be 8-bit µ-Law, 8-bit A-Law, or 13-bit to 16-bit Linear.

The CVSD conversion module operates at a fixed rate of 125 µs (8 kHz) per PCM sample. On the CVSD side, there is a read and a write FIFO allowing up to 8 words of data to be read or written at the same time. On the PCM side, there is a double-buffered register requiring data to be read and written every 125 µs. The intended use is to move CVSD data into the module with a CVSD interrupt handler, and to move PCM data with DMA. Figure 21-1 shows a block diagram of the CVSD to PCM module.

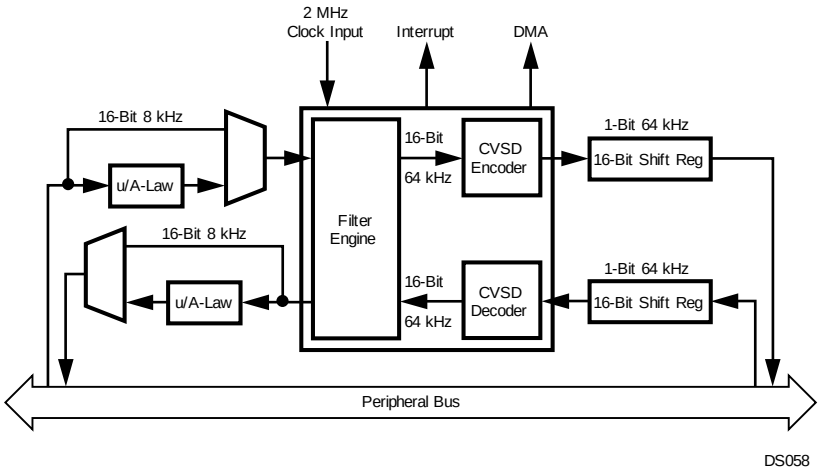

Figure 21-1. CVSD/PCM Converter Block Diagram

21.1 OPERATION

The Aux2 clock (generated by the Clock module described in Clock and Reset Registers) must be configured, because it drives the CVSD module. Software must set its prescaler to provide a 2 MHz input clock based upon the System Clock (usually 12 MHz). This is done by writing an appropriate divisor to the ACDIV2 field of the PRSAC register. Software must also enable the Aux2 clock by setting the ACE2 bit within the CRCTRL register. For example:

```
PRSAC &= 0x0f;

// Set Aux2 prescaler to generate

// 2 MHz (Fsys = 12 MHz)

PRSAC |= 0x50;

CRCTRL |= ACE2; // Enable Aux2 clk
```

If PCM interrupts are enabled (PCMINT is set) every 125 µs (8 kHz) an interrupt will occur and the interrupt handler can operate on some or all of the four audio streams CVSD in, CVSD out, PCM in, and PCM out. Alternatively, a DMA request is issued every 125 µs and the DMA controller is used to move the PCM data between the CVSD/PCM module and the audio interface.

Copyright © 2007–2013, Texas Instruments Incorporated

If CVSD interrupts are enabled, an interrupt is issued when either one of the CVSD FIFOs is almost empty or almost full. On the PCM data side there is double buffering, and on the CVSD side there is an eight word (8 × 16-bit) FIFO for the read and write paths. Inside the module, a filter engine receives the 8 kHz stream of 16-bit samples and interpolates to generate a 64 kHz stream of 16-bit samples. This goes into a CVSD encoder which converts the data into a single-bit delta stream using the CVSD parameters as defined by the Bluetooth specification. There is a similar path that reverses this process converting the CVSD 64 kHz bit stream into a 64 kHz 16-bit data stream. The filter engine then decimates this stream into an 8 kHz, 16-bit data stream.

21.2 PCM CONVERSIONS

During conversion between CVSD and PCM, any PCM format changes are done automatically depending on whether the PCM data is µ-Law, A-Law, or Linear. In addition to this, a separate function can be used to convert between the various PCM formats as required. Conversion is performed by setting up the control bit CVCTL1.PCMCONV to define the conversion and then writing to the LOGIN and LINEARIN registers and reading from the LOGOUT and LINEAROUT registers. There is no delay in the conversion operation and it does not have to operate at a fixed rate. It will only convert between µ-Law/A-Law and linear, not directly between µ-Law and A-Law. (This could easily be achieved by converting between µ-Law and linear and between linear and A-Law.)

If a conversion is performed between linear and µ-Law log PCM data, the linear PCM data are treated in the left-aligned 14-bit linear data format with the two LSBs unused. If a conversion is performed between linear and A-Law log PCM data, the linear PCM data are treated in the left-aligned 13-bit linear data format with the three LSBs unused.

If the module is only used for PCM conversions, the CVSD clock can be disabled by clearing the CVSD Clock Enable bit (CLKEN) in the control register.

21.3 CVSD CONVERSION

The CVSD/PCM converter module transforms either 8-bit logarithmic or 13- to 16-bit linear PCM samples at a fixed rate of 8 ksps. The CVSD to PCM conversion format must be specified by the CVSDCONV control bits in the CVSD Control register (CVCTRL).

The CVSD algorithm is designed for 2's complement 16-bit data and is tuned for best performance with typical voice data. Mild distortion will occur for peak signals greater than -6 dB. The Bluetooth CVSD standard is designed for best performace with typical voice signals: nominally -6dB with occasional peaks to 0dB rather than full-scale inputs. Distortion of signals greater than -6dB is not considered detrimental to subjective quality tests for voice-band applications and allows for greater clarity for signals below -6dB. The gain of the input device should be tuned with this in mind.

If required, the RESOLUTION field of the CVCTRL register can be used to optimize the level of the 16-bit linear input data by providing attenuations (right-shifts with sign extention) of 1, 2, or 3 bits.

Log data is always 8 bit, but to perform the CVSD conversion, the log data is first converted to 16-bit 2's complement linear data. A-law and u-law conversion can also slightly affect the optimum gain of the input data. The CVCTRL.RESOLUTION field can be used to attenuate the data if required.

If the resolution is not set properly, the audio signal may be clipped or have reduced attenuation.

21.4 PCM TO CVSD CONVERSION

The converter core reads out the double-buffered PCMIN register every 125 µs and writes a new 16-bit CVSD data stream into the CVSD Out FIFO every 250 µs. If the PCMIN buffer has not been updated with a new PCM sample between two reads from the CVSD core, the old PCM data is used again to maintain a fixed conversion rate. Once a new 16-bit CVSD data stream has been calculated, it is copied into the 8 × 16-bit wide CVSD Out FIFO.

If there are only three empty words (16-bit) left in the FIFO, the nearly full bit (CVNF) is set, and, if enabled (CVSDINT = 1), an interrupt request is asserted.

Copyright © 2007–2013, Texas Instruments Incorporated

If the CVSD Out FIFO is full, the full bit (CVF) is set, and, if enabled (CVSDERRINT = 1), an interrupt request is asserted. In this case, the CVSD Out FIFO remains unchanged.

Within the interrupt handler, the CPU can read out the new CVSD data. If the CPU reads from an already empty CVSD Out FIFO, a lockup of the FIFO logic may occur which persists until the next reset. Software must check the CVOUTST field of the CVSTAT register to read the number of valid words in the FIFO. Software must not use the CVNF bit as an indication of the number of valid words in the FIFO.

21.5 CVSD TO PCM CONVERSION

The converter core reads from the CVSD In FIFO every 250 µs and writes a new PCM sample into the PCMOUT buffer every 125 µs. If the previous PCM data has not yet been transferred to the audio interface, it will be overwritten with the new PCM sample.

If there are only three unread words left, the CVSD In Nearly Empty bit (CVNE) is set and, if enabled (CVSDINT = 1), an interrupt request is generated.

If the CVSD In FIFO is empty, the CVSD In Empty bit (CVE) is set and, if enabled (CVSDERRINT = 1), an interrupt request is generated. If the converter core reads from an already empty CVSD In FIFO, the FIFO automatically returns a checkerboard pattern to guarantee a minimum level of distortion of the audio stream.

21.6 INTERRUPT GENERATION

An interrupt is generated in any of the following cases:

- When a new PCM sample has been written into the PCMOUT register and the CVCTRL.PCMINT bit is set.
- When a new PCM sample has been read from the PCMIN register and the CVCTRL.PCMINT bit is set.
- When the CVSD In FIFO is nearly empty (CVSTAT.CVNE = 1) and the CVCTRL.CVSDINT bit is set.
- When the CVSD Out FIFO is nearly full (CVSTAT.CVNF = 1) and the CVCTRL.CVSDINT bit is set.
- When the CVSD In FIFO is empty (CVSTAT.CVE = 1) and the CVCTRL.CVSDERRINT bit is set.
- When the CVSD Out FIFO is full (CVSTAT.CVF = 1) and the CVCTRL.CVSDERRINT bit is set.

Both the CVSD In and CVSD Out FIFOs have a size of 8 × 16 bit (8 words). The warning limits for the two FIFOs is set at 5 words. (The CVSD In FIFO interrupt will occur when there are 3 words left in the FIFO, and the CVSD Out FIFO interrupt will occur when there are 3 or less empty words left in the FIFO.) The limit is set to 5 words because Bluetooth audio data is transferred in packages composed of 10 or multiples of 10 bytes.

21.7 DMA SUPPORT

The CVSD module can operate with any of four DMA channels. Four DMA channels are required for processor independent operation. Both receive and transmit for CVSD data and PCM data can be enabled individually. The CVSD/ PCM module asserts a DMA request to the on-chip DMA controller under the following conditions:

- The DMAPO bit is set and the PCMOUT register is full, because it has been updated by the converter core with a new PCM sample. (The DMA controller can read out one PCM data word from the PCMOUT register.)
- The DMAPI bit is set and the PCMIN register is empty, because it has been read by the converter core. (The DMA controller can write one new PCM data word into the PCMIN register.)
- The DMACO bit is set and a new 16-bit CVSD data stream has been copied into the CVSD Out FIFO. (The DMA controller can read out one 16-bit CVSD data word from the CVSD Out FIFO.)
- The DMACI bit is set and a 16-bit CVSD data stream has been read from the CVSD In FIFO. (The DMA controller can write one new 16-bit CVSD data word into the CVSD In FIFO.)

The CVSD/PCM module only supports indirect DMA transfers. Therefore, transferring PCM data between the CVSD/ PCM module and another on-chip module requires two bus cycles.

 Copyright © 2007–2013, Texas Instruments Incorporated

The trigger for DMA may also trigger an interrupt if the corresponding enable bits in the CVCTRL register is set. Therefore care must be taken when setting the desired interrupt and DMA enable bits. The following conditions must be avoided:

- Setting the PCMINT bit and either of the DMAPO or DMAPI bits.
- Setting the CVSDINT bit and either of the DMACO or DMACI bits.

21.8 FREEZE

The CVSD/PCM module provides support for an In-System-Emulator by means of a special FREEZE input. While FREEZE is asserted the module will exhibit the following behavior:

- CVSD In FIFO will not have data removed by the converter core.
- CVSD Out FIFO will not have data added by the converter core.
- PCM Out buffer will not be updated by the converter core.
- The Clear-on-Read function of the following status bits in the CVSTAT register is disabled:
  - PCMINT
  - CVE
  - CVF

21.9 CVSD/PCM CONVERTER REGISTERS

Table 21-1 lists the CVSD/PCM registers.

Table 21-1. CVSD/PCM Registers

Name	Address	Description
CVSDIN	FF FC20h	CVSD Data Input Register
CVSDOUT	FF FC22h	CVSD Data Output Register
PCMIN	FF FC24h	PCM Data Input Register
PCMOUT	FF FC26h	PCM Data Output Register
LOGIN	FF FC28h	Logarithmic PCM Data Input Register
LOGOUT	FF FC2Ah	Logarithmic PCM Data Output Register
LINEARIN	FF FC2Ch	Linear PCM Data Input Register
LINEAROUT	FF FC2Eh	Linear PCM Data Output Register
CVCTRL	FF FC30h	CVSD Control Register
CVSTAT	FF FC32h	CVSD Status Register

21.9.1 CVSD Data Input Register (CVSDIN)

The CVSDIN register is a 16-bit wide, write-only register. It is used to write CVSD data into the CVSD to PCM converter FIFO. The FIFO is 8 words deep. The CVSDIN bit 15 represents the CVSD data bit at $t = t_0$, CVSDIN bit 0 represents the CVSD data bit at $t = t_0$ - 250 ms.

15	0
CVSDIN	

21.9.2 CVSD Data Output Register (CVSDOUT)

The CVSDOUT register is a 16-bit wide read-only register. It is used to read the CVSD data from the PCM to CVSD converter. The FIFO is 8 words deep. Reading the CVSD- OUT register after reset returns undefined data.

15	0
CVSDOUT	

21.9.3 PCM Data Input Register (PCMIN)

The PCMIN register is a 16-bit wide write-only register. It is used to write PCM data to the PCM to CVSD converter via the peripheral bus. It is double-buffered, providing a 125 µs period for an interrupt or DMA request to respond.

15	0
PCMIN	

21.9.4 PCM Data Output Register (PCMOUT)

The PCMOUT register is a 16-bit wide read-only register. It is used to read PCM data from the CVSD to PCM converter. It is double-buffered, providing a 125 µs period for an interrupt or DMA request to respond. After reset the PCMOUT register is clear.

15	0
PCMOUT	

21.9.5 Logarithmic PCM Data Input Register (LOGIN)

The LOGIN register is an 8-bit wide write-only register. It is used to receive 8-bit logarithmic PCM data from the peripheral bus and convert it into 13-bit linear PCM data.

7	0
LOGIN	

21.9.6 Logarithmic PCM Data Output Register (LOGOUT)

The LOGOUT register is an 8-bit wide read-only register. It holds logarithmic PCM data that has been converted from linear PCM data. After reset, the LOGOUT register is clear.

7	0
LOGOUT	

21.9.7 Linear PCM Data Input Register (LINEARIN)

The LINEARIN register is a 16-bit wide write-only register. The data is left-aligned. When converting to A-law, bits 2:0 are ignored. When converting to µ-law, bits 1:0 are ignored.

15	0
LINEARIN	

Copyright © 2007–2013, Texas Instruments Incorporated

21.9.8 Linear PCM Data Output Register (LINEAROUT)

The LINEAROUT register is a 16-bit wide read-only register. The data is left-aligned. When converting from A-law, bits 2:0 are clear. When converting from µ-law, bits 1:0 are clear. After reset, this register is clear.

15							0
LINEAROUT							

21.9.9 CVSD Control Register (CVCTRL)

The CVCTRL register is a 16-bit wide, read/write register that controls the mode of operation and of the module's interrupts. At reset, all implemented bits are cleared.

7	6	5	4	3	2	1	0
DMAPO	DMACI	DMACO	CVSDERRINT	CVSDINT	PCMINT	CLKEN	CVEN

15	14	13	12	11	10	9	8
Res.		RESOLUTION		PCMCONV	CVSDCONV		DMAPI

CVEN — The Module Enable bit enables or disables the CVSD conversion module interface. When the bit is set, the interface is enabled which allows read and write operations to the rest of the module. When the bit is clear, the module is disabled. When the module is disabled the status register CVSTAT will be cleared to its reset state.
0 – CVSD module enabled.
1 – CVSD module disabled.

CLKEN — The CVSD Clock Enable bit enables the 2-MHz clock to the filter engine and CVSD encoders and decoders.
0 – CVSD module clock disabled.
1 – CVSD module clock enabled.

PCMINT — The PCM Interrupt Enable bit controls generation of the PCM interrupt. If set, this bit enables the PCM interrupt. If the PCMINT bit is clear, the PCM interrupt is disabled. After reset, this bit is clear.
0 – PCM interrupt disabled.
1 – PCM interrupt enabled.

CVSDINT — The CVSD FIFO Interrupt Enable bit controls generation of the CVSD interrupt. If set, this bit enables the CVSD interrupt that occurs if the CVSD In FIFO is nearly empty or the CVSD Out FIFO is nearly full. If the CVSDINT bit is clear, the CVSD nearly full/nearly empty interrupt is disabled. After reset, this bit is clear.
0 – CVSD interrupt disabled.
1 – CVSD interrupt enabled.

CVSDERRINT — The CVSD FIFO Error Interrupt Enable bit controls generation of the CVSD error interrupt. If set, this bit enables an interrupt to occur when the CVSD Out FIFO is full or the CVSD In FIFO is empty. If the CVSDERRORINT bit is clear, the CVSD full/empty interrupt is disabled. After reset, this bit is clear.
0 – CVSD error interrupt disabled.
1 – CVSD error interrupt enabled.

DMACO — The DMA Enable for CVSD Out bit enables hardware DMA control for reading CVSD data from the CVSD Out FIFO. If clear, DMA support is disabled. After reset, this bit is clear.
0 – CVSD output DMA disabled.
1 – CVSD output DMA enabled.

DMACI — The DMA Enable for CVSD In bit enables hardware DMA control for writing CVSD data into the CVSD In FIFO. If clear, DMA support is disabled. After reset, this bit is clear.
0 – CVSD input DMA disabled.
1 – CVSD input DMA enabled.

DMAPO — The DMA Enable for PCM Out bit enables hardware DMA control for reading PCM data from the PCMOUT register. If clear, DMA support is disabled. After reset, this bit is clear.
0 – PCM output DMA disabled.
1 – PCM output DMA enabled.

DMAPI — The DMA Enable for PCM In bit enables hardware DMA control for writing PCM data into the PCMIN register. If cleared, DMA support is disabled. After reset, this bit is clear.
0 – PCM input DMA disabled.
1 – PCM input DMA enabled.

Copyright © 2007–2013, Texas Instruments Incorporated

CVSDCONV The Linear PCM Resolution field specifies the attenuation of the PCM data for the linear PCM to CVSD conversions by right shifting and sign extending the data. This affects the log PCM data as well as the linear PCM data. The log data is converted to either left-justified zero-stuffed 13-bit (A-law) or 14-bit (u-law). The RESOLUTION field can be used to compensate for any change in average levels resulting from this conversion. After reset, these two bits are clear.
00 – No shift.
01 – 1-bit attentuation.
10 – 2-bit attentuation.
11 – 3-bit attentuation.

PCMCONV The PCM to PCM Conversion Format bit selects the PCM format for PCM/PCM conversions.
0 -- Linear PCM <-> 8-bit u-Law PCM
1 -- Linear PCM <-> 8-bit A-Law PCM

RESOLUTION The Linear PCM Resolution field specifies the attenuation of the PCM data for the linear PCM to CVSD conversions by right shifting and sign extending the data. This affects the log PCM data as well as the linear PCM data. The log data is converted to either left-justified zero-stuffed 13-bit (A-law) or 14-bit (u-law). The RESOLUTION field can be used to compensate for any change in average levels resulting from this conversion. After reset, these two bits are clear.
00 – No shift.
01 – 1-bit attentuation.
10 – 2-bit attentuation.
11 – 3-bit attentuation.

21.9.10 CVSD Status Register (CVSTAT)

The CVSTAT register is a 16-bit wide, read-only register that holds the status information of the CVSD/PCM module. At reset, and if the CVCTL1.CVEN bit is clear, all implemented bits are cleared.

7 – 5	4	3	2	1	0
CVINST	CVF	CVE	PCMINT	CVNF	CVNE

15 – 11	10 – 8
Reserved	CVOUTST

CVNE The CVSD In FIFO Nearly Empty bit indicates when only three CVSD data words are left in the CVSD In FIFO, so new CVSD data should be written into the CVSD In FIFO. If the CVS- DINT bit is set, an interrupt will be asserted when the CVNE bit is set. If the DMACI bit is set, a DMA request will be asserted when this bit is set. The CVNE bit is cleared when the CVSTAT register is read.
0 – CVSD In FIFO is not nearly empty.
1 – CVSD In FIFO is nearly empty.

CVNF The CVSD Out FIFO Nearly Full bit indicates when only three empty word locations are left in the CVSD Out FIFO, so the CVSD Out FIFO should be read. If the CVSDINT bit is set, an interrupt will be asserted when the CVNF bit is set. If the DMACO bit is set, a DMA request will be asserted when this bit is set. Software must not rely on the CVNF bit as an indicator of the number of valid words in the FIFO. Software must check the CVOUTST field to read the number of valid words in the FIFO. The CVNF bit is cleared when the CVSTAT register is read.
0 – CVSD Out FIFO is not nearly full.
1 – CVSD Out FIFO is nearly full.

PCMINT The PCM Interrupt bit set indicates that the PCMOUT register is full and needs to be read or the PCMIN register is empty and needs to be loaded with new PCM data. The PCMINT bit is cleared when the CVSTAT register is read, unless the device is in FREEZE mode.
0 – PCM does not require service.
1 – PCM requires loading or unloading.

CVE The CVSD In FIFO Empty bit indicates when the CVSD In FIFO has been read by the CVSD converter while the FIFO was already empty. If the CVSDERRORINT bit is set, an interrupt will be asserted when the CVE bit is set. The CVE bit is cleared when the CVSTAT register is read, unless the device is in FREEZE mode.
0 – CVSD In FIFO has not been read while empty.
1 – CVSD In FIFO has been read while empty.

CVF The CVSD Out FIFO Full bit set indicates whether the CVSD Out FIFO has been written by the CVSD converter while the FIFO was al- ready full. If the CVSDERRORINT bit is set, an interrupt will be asserted when the CVF bit is set. The CVF bit is cleared when the CVSTAT register is read, unless the device is in FREEZE mode.
0 – CVSD Out FIFO has not been written while full.
1 – CVSD Out FIFO has been written while full.

CVINST The CVSD In FIFO Status field reports the current number of empty 16-bit word locations in the CVSD In FIFO. When the FIFO is empty, the CVINST field will read as 111b. When the FIFO holds 7 or 8 words of data, the CVINST field will read as 000b.

CVOUTST CVSD Out FIFO Status field reports the current number of valid 16-bit CVSD data words in the CVSD Out FIFO. When the FIFO is empty, the CVOUTST field will read as 000b. When the FIFO holds 7 or 8 words of data, the CVOUTST field will read as 111b.

Copyright © 2007–2013, Texas Instruments Incorporated

22 UART MODULES

The CP3BT26 provides four UART modules. Each UART module is a full-duplex Universal Asynchronous Receiver/ Transmitter that supports a wide range of software-programmable baud rates and data formats. It handles automatic parity generation and several error detection schemes.

All UART modules offer the following features:

- Full-duplex double-buffered receiver/transmitter
- Asynchronous operation
- Programmable baud rate
- Programmable framing formats: 7, 8, or 9 data bits; even, odd, or no parity; one or two stop bits (mark or space)
- Hardware parity generation for data transmission and parity check for data reception
- Interrupts on “transmit ready” and “receive ready” conditions, separately enabled
- Software-controlled break transmission and detection
- Internal diagnostic capability

Automatic detection of parity, framing, and overrun errors One module, UART0, offers the following additional features:

- Synchronous operation using the CKX external clock pin
- Hardware flow control ($\overline{CTS}$ and $\overline{RTS}$ signals)
- DMA capability

22.1 FUNCTIONAL OVERVIEW

Figure 22-1 is a block diagram of the UART module showing the basic functional units in the UART:

- Transmitter
- Receiver
- Baud Rate Generator
- Control and Error Detection

The Transmitter block consists of an 8-bit transmit shift register and an 8-bit transmit buffer. Data bytes are loaded in parallel from the buffer into the shift register and then shifted out serially on the TXD pin.

The Receiver block consists of an 8-bit receive shift register and an 8-bit receive buffer. Data is received serially on the RXD pin and shifted into the shift register. Once eight bits have been received, the contents of the shift register are transferred in parallel to the receive buffer.

The Transmitter and Receiver blocks both contain extensions for 9-bit data transfers, as required by the 9-bit and loopback operating modes.

The Baud Rate Generator generates the clock for the synchronous and asynchronous operating modes. It consists of two registers and a two-stage counter. The registers are used to specify a prescaler value and a baud rate divisor. The first stage of the counter divides the UART clock based on the value of the programmed prescaler to create a slower clock. The second stage of the counter creates the baud rate clock by dividing the output of the first stage based on the programmed baud rate divisor.

The Control and Error Detection block contains the UART control registers, control logic, error detection circuit, parity generator/checker, and interrupt generation logic. The control registers and control logic determine the data format, mode of operation, clock source, and type of parity used. The error detection circuit generates parity bits and checks for parity, framing, and overrun errors.

The Flow Control Logic block provides the capability for hardware handshaking between the UART and a peripheral device. When the peripheral device needs to stop the flow of data from the UART, it deasserts the clear-to-send ($\overline{CTS}$) signal which causes the UART to pause after sending the current frame (if any). The UART asserts the ready-to-send ($\overline{RTS}$) signal to the peripheral when it is ready to send a character.

Copyright © 2007–2013, Texas Instruments Incorporated

22.2 UART OPERATION

The UART has two basic modes of operation: synchronous and asynchronous. Synchronous mode is only supported for the UART0 module. In addition, there are two special-purpose modes, called attention and diagnostic. This section describes the operating modes of the UART.

22.2.1 Asynchronous Mode

The asynchronous mode of the UART enables the device to communicate with other devices using just two communication signals: transmit and receive.

In asynchronous mode, the transmit shift register (TSFT) and the transmit buffer (UnTBUF) double-buffer the data for transmission. To transmit a character, a data byte is loaded in the UnTBUF register. The data is then transferred to the TSFT register. While the TSFT register is shifting out the current character (LSB first) on the TXD pin, the UnTBUF register is loaded by software with the next byte to be transmitted. When TSFT finishes transmission of the last stop bit of the current frame, the contents of UnTBUF are transferred to the TSFT register and the Transmit Buffer Empty bit (UTBE) is set. The UTBE bit is automatically cleared by the UART when software loads a new character into the UnTBUF register. During transmission, the UXMIP bit is set high by the UART. This bit is reset only after the UART has sent the last stop bit of the current character and the UnT- BUF register is empty. The UnTBUF register is a read/write register. The TSFT register is not software accessible.

In asynchronous mode, the input frequency to the UART is 16 times the baud rate. In other words, there are 16 clock cycles per bit time. In asynchronous mode, the baud rate generator is always the UART clock source.

The receive shift register (RSFT) and the receive buffer (UnRBUF) double buffer the data being received. The UART receiver continuously monitors the signal on the RXD pin for a low level to detect the beginning of a start bit. On sensing this low level, the UART waits for seven input clock cycles and samples again three times. If all three samples still indicate a valid low, then the receiver considers this to be a valid start bit, and the remaining bits in the character frame are each sampled three times, around the mid-bit position. For any bit following the start bit, the logic value is found by majority voting, that is the two samples with the same value de- fine the value of the data bit. Figure 22-2 illustrates the process of start bit detection and bit sampling.

Data bits are sensed by taking a majority vote of three samples latched near the midpoint of each baud (bit time). Normally, the position of the samples within the baud is determined automatically, but software can override the automatic selection by setting the USMD bit in the UnMDSL2 register and programming the UnSPOS register.

Serial data input on the RXD pin is shifted into the RSFT register. On receiving the complete character, the contents of the RSFT register are copied into the UnRBUF register and the Receive Buffer Full bit (URBF) is set. The URBF bit is automatically cleared when software reads the character from the URBUF register. The RSFT register is not software accessible.

Copyright © 2007–2013, Texas Instruments Incorporated

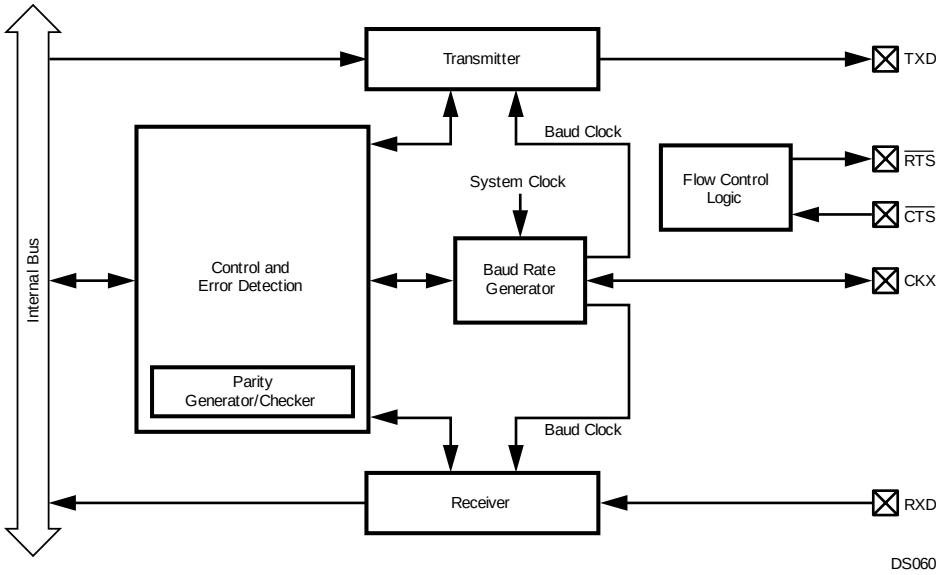

Figure 22-1. UART Block Diagram

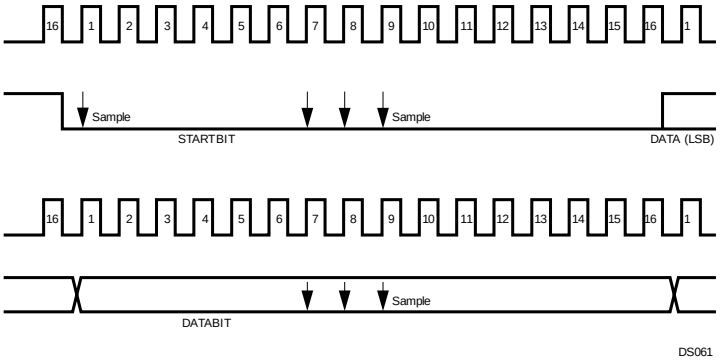

Figure 22-2. UART Asynchronous Communication

In synchronous mode, the transmit shift register (TSFT) and the transmit buffer (UnTBUF) double-buffer the data for transmission. To transmit a character, a data byte is loaded in the UnTBUF register. The data is then transferred to the TSFT register. The TSFT register shifts out one bit of the current character, LSB first, on each rising edge of the clock. While the TSFT is shifting out the current character on the TXD pin, the UnTBUF register may be loaded by software with the next byte to be transmitted. When the TSFT finishes transmission of the last stop bit within the current frame, the contents of UnTBUF are transferred to the TSFT register and the Transmit Buffer Empty bit (UTBE) is set. The UTBE bit is automatically reset by the UART when software loads a new character into the UnTBUF register. During transmis- sion, the UXMIP bit is set by the UART. This bit is cleared only after the UART has sent the last frame bit of the current character and the UnTBUF register is empty.

22.2.2 Synchronous Mode

The synchronous mode of the UART enables the device to communicate with other devices using three communication signals: transmit, receive, and clock. In this mode, data bits are transferred synchronously with the UART clock signal. Data bits are transmitted on the rising edges and received on the falling edges of the clock signal, as shown in Figure 22-3. Data bytes are transmitted and received least significant bit (LSB) first.

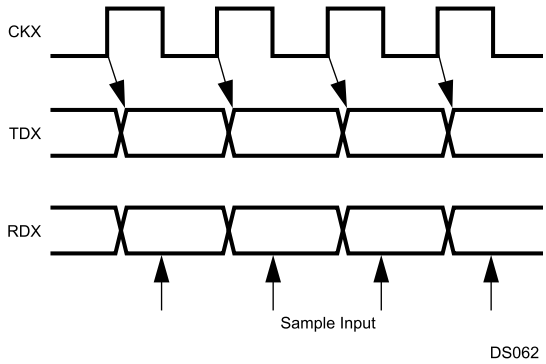

Figure 22-3. UART Synchronous Communication

In synchronous mode, the transmit shift register (TSFT) and the transmit buffer (UnTBUF) double-buffer the data for transmission. To transmit a character, a data byte is loaded in the UnTBUF register. The data is then transferred to the TSFT register. The TSFT register shifts out one bit of the current character, LSB first, on each rising edge of the clock. While the TSFT is shifting out the current character on the TXD pin, the UnTBUF register may be loaded by software with the next byte to be transmitted. When the TSFT finishes transmission of the last stop bit within the current frame, the contents of UnTBUF are transferred to the TSFT register and the Transmit Buffer Empty bit (UTBE) is set. The UTBE bit is automatically reset by the UART when software loads a new character into the UnTBUF register. During transmission, the UXMIP bit is set by the UART. This bit is cleared only after the UART hassent the last frame bit of the current character and the UnTBUF register is empty. The receive shift register (RSFT) and the receive buffer (URBUF) double-buffer the data being received. Serial data received on the RXD pin is shifted into the RSFT register on the first falling edge of the clock. Each subsequent falling edge of the clock causes an additional bit to be shifted into the RSFT register. The UART assumes a complete character has been received after the correct number of rising edges on CKX (based on the selected frame format) have been detected. On receiving a complete character, the contents of the RSFT register are copied into the UnRBUF register and the Receive Buffer Full bit (URBF) is set. The URBF bit is automatically cleared when software reads the character from the UnRBUF register.

The transmitter and receiver may be clocked by either an external source provided to the CKX pin or the internal baud rate generator. In the latter case, the clock signal is placed on the CKX pin as an output.

22.2.3 Attention Mode

The Attention mode is available for networking this device with other processors. This mode requires the 9-bit data format with no parity. The number of start bits and number of stop bits are programmable. In this mode, two types of 9-bit characters are sent on the network: address characters consisting of 8 address bits and a 1 in the ninth bit position and data characters consisting of 8 data bits and a 0 in the ninth bit position.

Copyright © 2007–2013, Texas Instruments Incorporated

While in Attention mode, the UART receiver monitors the communication flow but ignores all characters until an address character is received. On receiving an address character, the contents of the receive shift register are copied to the receive buffer. The URBF bit is set and an interrupt (if enabled) is generated. The UATN bit is automatically cleared, and the UART begins receiving all subsequent characters. Software must examine the contents of the URBUF register and respond by accepting the subsequent characters (by leaving the UATN bit clear) or waiting for the next address character (by setting the UATN bit again).

The operation of the UART transmitter is not affected by the selection of this mode. The value of the ninth bit to be transmitted is programmed by setting or clearing the UXB9 bit in the UART Frame Select register. The value of the ninth bit received is read from URB9 in the UART Status Register.

22.2.4 Diagnostic Mode

The Diagnostic mode is available for testing of the UART. In this mode, the TXD and RXD pins are internally connected together, and data shifted out of the transmit shift register is immediately transferred to the receive shift register. This mode supports only the 9-bit data format with no parity. The number of start and stop bits is programmable.

22.2.5 Frame Format Selection

The format shown in Figure 22-4 consists of a start bit, seven data bits (excluding parity), and one or two stop bits. If parity bit generation is enabled by setting the UPEN bit, a parity bit is generated and transmitted following the seven data bits.

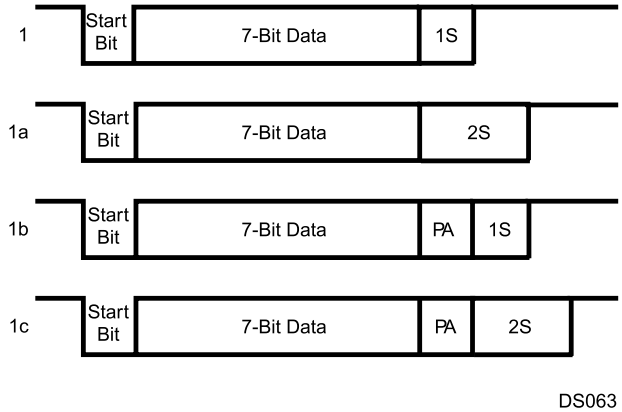

Figure 22-4. 7-Bit Data Frame Options

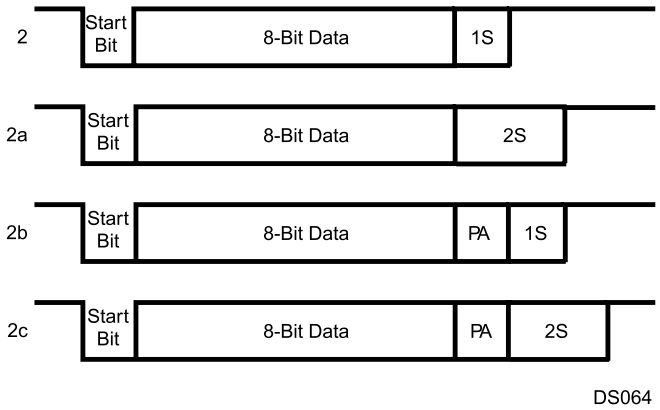

Figure 22-5. 8-Bit Data Frame Options

The format shown in Figure 22-6 consists of one start bit, nine data bits, and one or two stop bits. This format also supports the UART attention feature. When operating in this format, all eight bits of UnTBUF and UnRBUF are used for data. The ninth data bit is transmitted and received using two bits in the control registers, called UXB9 and URB9. Parity is not generated or verified in this mode.

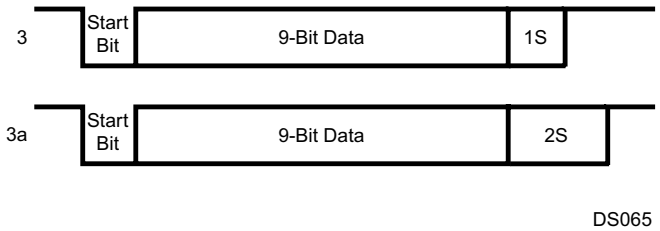

Figure 22-6. 9-bit Data Frame Options

Copyright © 2007–2013, Texas Instruments Incorporated

22.2.6 Baud Rate Generator

The Baud Rate Generator creates the basic baud clock from the System Clock. The System Clock is passed through a two-stage divider chain consisting of a 5-bit baud rate prescaler (UnPSC) and an 11-bit baud rate divisor (UnDIV).

The relationship between the 5-bit prescaler select (UnPSC) setting and the prescaler factors is shown in Table 22-1.

Table 22-1. Prescaler Factors

Prescaler Select	Prescaler Factor
00000	No clock
00001	1
00010	1.5
00011	2
00100	2.5
00101	3
00110	3.5
00111	4
01000	4.5
01001	5
01010	5.5
1011	6
1100	6.5
1101	7
1110	7.5
1111	8
10000	8.5
10001	9
10010	9.5
10011	10
10100	10.5
10101	11
10110	11.5
10111	12
11000	12.5
11001	13
11010	13.5
11011	14
11100	14.5
11101	15
11110	15.5
11111	16

A prescaler factor of zero corresponds to “no clock.” The “no clock” condition is the UART power down mode, in which the UART clock is turned off to reduce power consumption. Software must select the “no clock” condition before entering a new baud rate. Otherwise, it could cause incorrect data to be received or transmitted. The UnPSR register must contain a value other than zero when an external clock is used at CKX.

Copyright © 2007–2013, Texas Instruments Incorporated

22.2.7 Interrupts

The UART is capable of generating interrupts on:

- Receive Buffer Full
- Receive Error
- Transmit Buffer Empty

Figure 22-7 shows a diagram of the interrupt sources and associated enable bits.

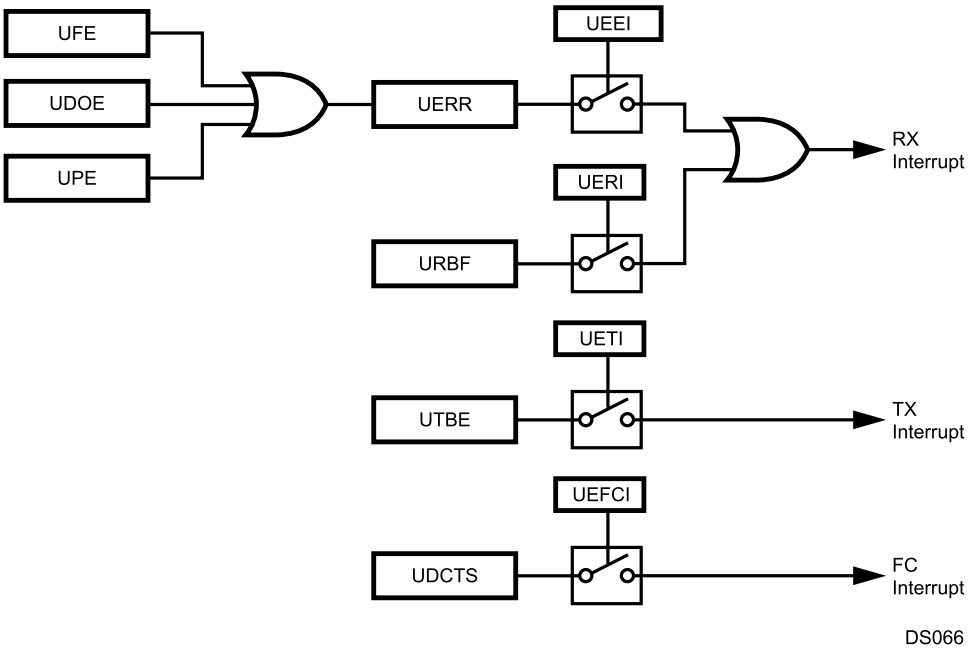

Figure 22-7. UART Interrupts

The interrupts can be individually enabled or disabled using the Enable Transmit Interrupt (UETI), Enable Receive Interrupt (UERI), and Enable Receive Error Interrupt (UEER) bits in the UnICTRL register.

A transmit interrupt is generated when both the UTBE and UETI bits are set. To remove this interrupt, software must either disable the interrupt by clearing the UETI bit or write to the UnTBUF register (which clears the UTBE bit).

A receive interrupt is generated on these conditions:

- Both the URBF and UERI bits are set. To remove this interrupt, software must either disable the interrupt by clearing the UERI bit or read from the URBUF register (which clears the URBF bit).
- Both the UERR and the UEEI bits are set. To remove this interrupt, software must either disable the interrupt by clearing the UEEI bit or read the UnSTAT register (which clears the UERR bit).

A flow control interrupt is generated when both the UDCTS and the UEFCI bits are set. To remove this interrupt, software must either disable the interrupt by clearing the UEFCI bit or reading the UnICTRL register (which clears the UDCTS bit).

In addition to the dedicated inputs to the ICU for UART interrupts, the UART receive (RXD) and Clear To Send ($\overline{CTS}$) signals are inputs to the MIWU (see Multi-Input Wake-Up), which can be programmed to generate edge-triggered interrupts.

Copyright © 2007–2013, Texas Instruments Incorporated

22.2.8 DMA Support

The UART module can operate with one or two DMA channels. Two DMA channels must be used for processor-independent full-duplex operation. Both receive and transmit DMA can be enabled simultaneously.

If transmit DMA is enabled (the UETD bit is set), the UART generates a DMA request when the UTBE bit changes state from clear to set. Enabling transmit DMA automatically disables transmit interrupts, without regard to the state of the UETI bit.

If receive DMA is enabled (the UERD bit is set), the UART generates a DMA request when the URBF bit changes state from clear to set. Enabling receive DMA automatically disables receive interrupts, without regard to the state of the UERI bit. However, receive error interrupts should be enabled (the UEEI bit is set) to allow detection of receive errors when DMA is used.

22.2.9 Break Generation and Detection

A line break is generated when the UBRK bit is set in the UnMDSL1 register. The TXD line remains low until the pro- gram resets the UBRK bit.

A line break is detected if RXD remains low for 10 bit times or longer after a missing stop bit is detected.

22.2.10 Parity Generation and Detection

Parity is only generated or checked with the 7-bit and 8-bit data formats. It is not generated or checked in the diagnostic loopback mode, the attention mode, or in normal mode with the 9-bit data format. Parity generation and checking are enabled and disabled using the PEN bit in the UnFRS register. The UPSEL bits in the UnFRS register are used to select odd, even, or no parity.

22.3 UART REGISTERS

Software interacts with the UART modules by accessing the UART registers, as listed in Table 22-2.

Table 22-2. UART Registers

Name	Address	Description
U0RBUF	FF F202h	UART0 Receive Data Buffer
U0TBUF	FF F200h	UART0 Transmit Data Buffer
U0PSR	FF F20Eh	UART0 Baud Rate Prescaler
U0BAUD	FF F20Ch	UART0 Baud Rate Divisor
U0FRS	FF F208h	UART0 Frame Select Register
U0MDSL	FF F20Ah	UART0 Mode Select Register 1
U0STAT	FF F206h	UART0 Status Register
U0ICTRL	FF F204h	UART0 Interrupt Control Register
U0OVR	FF F210h	UART0 Oversample Rate Register
U0MDSL2	FF F212h	UART0 Mode Select Register 2
U0SPOS	FF F214h	UART0 Sample Position Register
U1RBUF	FF F222h	UART1 Receive Data Buffer
U1TBUF	FF F220h	UART1 Transmit Data Buffer
U1PSR	FF F22Eh	UART1 Baud Rate Prescaler
U1BAUD	FF F22Ch	UART1 Baud Rate Divisor
U1FRS	FF F228h	UART1 Frame Select Register
U1MDSL1	FF F22Ah	UART1 Mode Select Register 1
U1STAT	FF F226h	UART1 Status Register
U1ICTRL	FF F224h	UART1 Interrupt Control Register
U1OVR	FF F230h	UART1 Oversample Rate Register
U1MDSL2	FF F232h	UART1 Mode Select Register 2

Copyright © 2007–2013, Texas Instruments Incorporated

Table 22-2. UART Registers (continued)

U1SPOS	FF F234h	UART1 Sample Position Register
U2RBUF	FF F242h	UART2 Receive Data Buffer
U2TBUF	FF F240h	UART2 Transmit Data Buffer
U2PSR	FF F24Eh	UART2 Baud Rate Prescaler
U2BAUD	FF F24Ch	UART2 Baud Rate Divisor
U2FRS	FF F248h	UART2 Frame Select Register
U2MDSL	FF F24Ah	UART2 Mode Select Register 1
U2STAT	FF F246h	UART2 Status Register
U2ICTRL	FF F244h	UART2 Interrupt Control Register
U2OVR	FF F250h	UART2 Oversample Rate Register
U2MDSL2	FF F252h	UART2 Mode Select Register 2
U2SPOS	FF F254h	UART2 Sample Position Register
U3RBUF	FF F262h	UART3 Receive Data Buffer
U3TBUF	FF F260h	UART3 Transmit Data Buffer
U3PSR	FF F26Eh	UART3 Baud Rate Prescaler
U3BAUD	FF F26Ch	UART3 Baud Rate Divisor
U3FRS	FF F268h	UART3 Frame Select Register
U3MDSL	FF F26Ah	UART3 Mode Select Register 1
U3STAT	FF F266h	UART3 Status Register
U3ICTRL	FF F264h	UART3 Interrupt Control Register
U3OVR	FF F270h	UART3 Oversample Rate Register
U3MDSL2	FF F272h	UART3 Mode Select Register 2
U3SPOS	FF F274h	UART3 Sample Position Register

22.3.1 UART Receive Data Buffer (UnRBUF)

The UnRBUF register is a byte-wide, read/write register used to receive each data byte.

7	0
URBUF	

22.3.2 UART Transmit Data Buffer (UnTBUF)

The UnTBUF register is a byte-wide, read/write register used to transmit each data byte.

7	0
UnTBUF	

Copyright © 2007–2013, Texas Instruments Incorporated

22.3.3 UART Baud Rate Prescaler (UnPSR)

The UnPSR register is a byte-wide, read/write register that contains the 5-bit clock prescaler and the upper three bits of the baud rate divisor. This register is cleared upon reset. The register format is shown below.

7 – 3	2 – 0
UPSC	UDIV10:8

UPSC	The Prescaler field specifies the prescaler value used for dividing the System Clock in the first stage of the two-stage divider chain. For the prescaler factors corresponding to each 5- bit value, see Table 22-1.
UDIV10:8	The Baud Rate Divisor field holds the three most significant bits (bits 10, 9, and 8) of the UART baud rate divisor used in the second stage of the two-stage divider chain. The remaining bits of the baud rate divisor are held in the UnBAUD register.

22.3.4 UART Baud Rate Divisor (UnBAUD)

The UnBAUD register is a byte-wide, read/write register that contains the lower eight bits of the baud rate divisor. The register contents are unknown at power-up and are left unchanged by a reset operation. The register format is shown below.

7 – 0
UDIV7:0

UDIV7:0	The Baud Rate Divisor field holds the eight lowest-order bits of the UART baud rate divisor used in the second stage of the two-stage divider chain. The three most significant bits are held in the UnPSR register. The divisor value used is (UDIV[10:0] + 1).

22.3.5 UART Frame Select Register (UnFRS)

The UnFRS register is a byte-wide, read/write register that controls the frame format, including the number of data bits, number of stop bits, and parity type. This register is cleared upon reset. The register format is shown below.

7	6	5 – 4	3	2	1 – 0
Reserved	UPEN	UPSEL	UXB9	USTP	UCHAR

UCHAR	The Character Frame Format field selects the number of data bits per frame, not including the parity bit, as follows: 00 – 8 data bits per frame. 01 – 7 data bits per frame. 10 – 9 data bits per frame. 11 – Loop-back mode, 9 data bits per frame.
USTP	The Stop Bits bit specifies the number of stop bits transmitted in each frame. If this bit is 0, one stop bit is transmitted. If this bit is 1, two stop bits are transmitted. 0 – One stop bit per frame. 1 – Two stop bits per frame.
UXB9	The Transmit 9th Data Bit holds the value of the ninth data bit, either 0 or 1, transmitted when the UART is configured to transmit nine data bits per frame. It has no effect when the UART is configured to transmit seven or eight data bits per frame.
UPSEL	The Parity Select field selects the treatment of the parity bit. When the UART is configured to transmit nine data bits per frame, the parity bit is omitted and the UPSEL field is ignored. 00 – Odd parity. 01 – Even parity. 10 – No parity, transmit 1 (mark). 11 – No parity, transmit 0 (space).
UPEN	The Parity Enable bit enables or disables parity generation and parity checking. When the UART is configured to transmit nine data bits per frame, there is no parity bit and the Un- PEN bit is ignored. 0 – Parity generation and checking disabled. 1 – Parity generation and checking enabled.

Copyright © 2007–2013, Texas Instruments Incorporated

22.3.6 UART Mode Select Register 1 (UnMDSL1)

The UnMDSL1 register is a byte-wide, read/write register that selects the clock source, synchronization mode, attention mode, and line break generation. This register is cleared at reset. The register format is shown below.

7	6	5	4	3	2	1	0
URTS	UFCE	UERD	UETD	UCKS	UBRK	UATN	UMOD

UMOD — The Mode bit selects between synchronous and asynchronous mode. Synchronous mode is only available for the UART0 module.
0 – Asynchronous mode.
1 – Synchronous mode.

UATN — The Attention Mode bit is used to enable Attention mode. When set, this bit selects the attention mode of operation for the UART. When clear, the attention mode is disabled. The hardware clears this bit after an address frame is received. An address frame is a 9-bit character with a 1 in the ninth bit position.
0 – Attention mode disabled.
1 – Attention mode enabled.

UBRK — The Force Transmission Break bit is used to force the TXD output low. Setting this bit to 1 causes the TXD pin to go low. TXD remains low until the UBRK bit is cleared by software.
0 – Normal operation.
1 – TXD pin forced low.

UCKS — The Synchronous Clock Source bit controls the clock source when the UART operates in the synchronous mode (UMOD = 1). This functionality is only available for the UART0 module. If the UCKS bit is set, the UART operates from an external clock provided on the CKX pin. If the UCKS bit is clear, the UART operates from the baud rate clock produced by the UART on the CKX pin. This bit is ignored when the UART operates in the asynchronous mode.
0 – Internal baud rate clock is used.
1 – External clock is used.

UETD — The Enable Transmit DMA bit controls whether DMA is used for UART transmit operations. Enabling transmit DMA automatically disables transmit interrupts, without regard to the state of the UETI bit.
0 – Transmit DMA disabled.
1 – Transmit DMA enabled.

UERD — The Enable Receive DMA bit controls whether DMA is used for UART receive operations. Enabling receive DMA automatically disables receive interrupts, without regard to the state of the UERI bit. Receive error interrupts are unaffected by the UERD bit.
0 – Receive DMA disabled.
1 – Receive DMA enabled.

UFCE — The Flow Control Enable bit controls whether flow control interrupts are enabled.
0 – Flow control interrupts disabled.
1 – Flow control interrupts enabled.

URTS — The Ready To Send bit directly controls the state of the RTS output.
0 – RTS output is high.
1 – RTS output is low.

Copyright © 2007–2013, Texas Instruments Incorporated

22.3.7 UART Status Register (UnSTAT)

The UnSTAT register is a byte-wide, read-only register that contains the receive and transmit status bits. This register is cleared upon reset. Any attempt by software to write to this register is ignored. The register format is shown below.

7	6	5	4	3	2	1	0
Res.	UXMIP	URB9	UBXD	UERR	UDOE	UFE	UPE

UPE	The Parity Error bit indicates whether a parity error is detected within a received character. This bit is automatically cleared by the hard- ware when the UnSTAT register is read. 0 – No parity error occurred. 1 – Parity error occurred.
UFE	The Framing Error bit indicates whether the UART fails to receive a valid stop bit at the end of a frame. This bit is automatically cleared by the hardware when the UnSTAT register is read. 0 – No framing error occurred. 1 – Framing error occurred.
UDOE	The Data Overrun Error bit is set when a new character is received and transferred to the UnRBUF register before software has read the previous character from the UnRBUF register. This bit is automatically cleared by the hardware when the UnSTAT register is read. 0 – No receive overrun error occurred. 1 – Receive overrun error occurred.
UERR	The Error Status bit indicates when a parity, framing, or overrun error occurs (any time that the UPE, UFE, or UDOE bit is set). It is automatically cleared by the hardware when the UPE, UFE, and UDOE bits are all 0. 0 – No receive error occurred. 1 – Receive error occurred.
UBKD	The Break Detect bit indicates when a line break condition occurs. This condition is detected if RXD remains low for at least ten bit times after a missing stop bit has been detected at the end of a frame. The hardware automatically clears the UBKD bit on reading the UnSTAT register, but only if the break condition on RXD no longer exists. If reading the UnSTAT register does not clear the UBKD bit because the break is still actively driven on the line, the hardware clears the bit as soon as the break condition no longer exists (when the RXD input returns to a high level). 0 – No break condition occurred. 1 – Break condition occurred.
URB9	The Received 9th Data Bit holds the ninth data bit, when the UART is configured to operate in the 9-bit data format.
UXMIP	The Transmit In Progress bit indicates when the UART is transmitting. The hardware sets this bit when the UART is transmitting data and clears the bit at the end of the last frame bit. 0 – UART is not transmitting. 1 – UART is transmitting.

Copyright © 2007–2013, Texas Instruments Incorporated

22.3.8 UART Interrupt Control Register (UnICTRL)

The UnICTRL register is a byte-wide register that contains the receive and transmit interrupt status bits (read-only bits) and the interrupt enable bits (read/write bits). The register is initialized to 01h at reset. The register format is shown below.

7	6	5	4	3	2	1	0
UEEI	UERI	UETI	UEFCI	UCTS	UDCTS	URBF	UTBE

UTBE — The Transmit Buffer Empty bit is set by hardware when the UART transfers data from the UnTBUF register to the transmit shift register for transmission. It is automatically cleared by the hardware on the next write to the UnTBUF register.
0 – Transmit buffer is loaded.
1 – Transmit buffer is empty.

URBF — The Receive Buffer Full bit is set by hardware when the UART has received a complete data frame and has transferred the data from the receive shift register to the UnRBUF register. It is automatically cleared by the hardware when the UnRBUF register is read.
0 – Receive buffer is empty.
1 – Receive buffer is loaded.

UDCTS — The Delta Clear To Send bit indicates whether the CTS input has changed state since the CPU last read this register. This functionality is only available for the UART0 module.
0 – No change since last read.
1 – State has changed since last read.

UCTS — The Clear To Send bit indicates the state on the CTS input. This functionality is only available for the UART0 module.
0 – CTS input is high.
1 – CTS input is low.

UEFCI — The Enable Flow Control Interrupt bit controls whether a flow control interrupt is generated when the UDCTS bit changes from clear to set. This functionality is only available for the UART0 module.
0 – Flow control interrupt disabled.
1 – Flow control interrupt enabled.

UETI — The Enable Transmitter Interrupt bit, when set, enables generation of an interrupt when the hardware sets the UTBE bit.
0 – Transmit buffer empty interrupt disabled.
1 – Transmit buffer empty interrupt enabled

UERI — The Enable Receiver Interrupt bit, when set, enables generation of an interrupt when the hardware sets the URBF bit.
0 – Receive buffer full interrupt disabled.
1 – Receive buffer full interrupt enabled.

UEEI — The Enable Receive Error Interrupt bit, when set, enables generation of an interrupt when the hardware sets the UERR bit in the UnSTAT register.
0 – Receive error interrupt disabled.
1 – Receive error interrupt enabled.

Copyright © 2007–2013, Texas Instruments Incorporated

22.3.9 UART Oversample Rate Register (UnOVR)

The UnOVR register is a byte-wide, read/write register that specifies the oversample rate. At reset, the UnOVR register is cleared. The register format is shown below.

7 – 4	3 – 0
Reserved	UOVSR

UOVSR The Oversampling Rate field specifies the oversampling rate, as given in the following table.

Table 22-3.

UOVSR3:0	Oversampling Rate
0000-0110	16
0111	7
1000	8
1001	9
1010	10
1011	11
1100	12
1101	13
1110	14
1111	15

22.3.10 UART Mode Select Register 2 (UnMDSL2)

The UnMDSL2 register is a byte-wide, read/write register that controls the sample mode used to recover asynchronous data. At reset, the UnOVR register is cleared. The register format is shown below.

7 – 1	0
Reserved	USMD

USMD The USMD bit controls the sample mode for asynchronous transmission.
0 – UART determines the sample position automatically.
1 – The UnSPOS register determines the sample position.

22.3.11 UART Sample Position Register (UnSPOS)

The UnSPOS register is a byte-wide, read/write register that specifies the sample position when the USMD bit in the UnMDSL2 register is set. At reset, the UnSPOS register is initialized to 06h. The register format is shown below.

7 – 4	3 – 0
Reserved	USAMP

USAMP The Sample Position field specifies the over-sample clock period at which to take the first of three samples for sensing the value of data bits. The clocks are numbered starting at 0 and may range up to 15 for 16× oversampling. The maximum value for this field is (oversampling rate - 3). below shows the clock period at which each of the three samples is taken, when automatic sampling is enabled (UnMDSL2.USMD = 0). The USAMP field may be used to override the automatic selection, to choose any other clock period at which to start taking the three samples.

Oversampling Rate	Sample Position		
	1	**2**	**3**
7	2	3	4
8	2	3	4
9	3	4	5
10	3	4	5
11	4	5	6
12	4	5	6
13	5	6	7
14	5	6	7
15	6	7	8
16	6	7	8

22.4 BAUD RATE CALCULATIONS

The UART baud rate is determined by the System Clock frequency and the values in the UnOVR, UnPSR, and UnBAUD registers. Unless the System Clock is an exact multiple of the baud rate, there will be a small amount of error in the resulting baud rate.

Copyright © 2007–2013, Texas Instruments Incorporated

22.4.1 Asynchronous Mode

The equation to calculate the baud rate in asynchronous mode is:

$$BR = SYS\_CLK / (O \times N \times P)$$

where

- BR is the baud rate
- SYS_CLK is the System Clock
- O is the oversample rate
- N is the baud rate divisor + 1, and
- P is the prescaler divisor selected by the UPSR register. (28)

Assuming a System Clock of 5 MHz, a desired baud rate of 9600, and an oversample rate of 16, the N × P term according to the equation above is:

$$N \times P = (5 \times 10^{16}) / (16 \times 9600) = 32.552 \quad (29)$$

The N × P term is then divided by each Prescaler Factor from Table 22-1 to obtain a value closest to an integer. The factor for this example is 6.5.

$$N = 32.552 / 6.5 = 5.008 \quad (30)$$

(N=5)

The baud rate register is programmed with a baud rate divisor of 4 (N = baud rate divisor + 1). This produces a baud clock of:

$$BR = (5 \times 10^{6}) / (16 \times 5 \times 6.5) = 9615.385 \quad (31)$$

$$\% \text{ error} = (9615.385 - 9600) / 9600 = 0.16 \quad (32)$$

Note that the percent error is much lower than would be possible without the non-integer prescaler factor. Error greater than 3% is marginal and may result in unreliable operation. Refer to Table 22-4 below for more examples.

22.4.2 Synchronous Mode

Synchronous mode is only available for the UART0 module. When synchronous mode is selected and the UCKS bit is set, the UART operates from a clock received on the CKX pin. When the UCKS bit is clear, the UART uses the clock from the internal baud rate generator which is also driven on the CKX pin. When the internal baud rate generator is used, the equation for calculating the baud rate is:

$$BR = SYS\_CLK / (2 \times N \times P)$$

where

- BR is the baud rate
- SYS_CLK is the System Clock
- N is the value of the baud rate divisor + 1,
- P is the prescaler divide factor selected by the value in the UnPSR register. (33)

Oversampling is not used in synchronous mode.

Use the same procedure to determine the values of N and P as in the asynchronous mode. In this case, however, only integer prescaler values are allowed.

Table 22-4. Baud Rate Programming

Baud Rate	SYS_CLK = 48 MHz				SYS_CLK = 24 MHz				SYS_CLK = 12 MHz				SYS_CLK = 10 MHz			
	O	N	P	%err	O	N	P	%err	O	N	P	%err	O	N	P	%err
300	16	2000	5	0	16	2000	2.5	0	16	1250	2	0	13	1282	2	0
600	16	2000	2.5	0	16	1250	2	0	16	1250	1	0	13	1282	1	0
1200	16	1250	2	0	16	1250	1	0	16	625	1	0	13	641	1	0
1800	7	401	9.5	0	8	1111	1.5	0.01	12	101	5.5	0.01	12	463	1	0.01
2000	16	1500	1	0	16	750	1	0	16	250	1.5	0	16	125	2.5	0
2400	16	1250	1	0	16	625	1	0	16	125	2.5	0	9	463	1	0.01
3600	8	1111	1.5	0.01	12	101	5.5	0.01	11	202	1.5	0.01	11	101	2.5	0.01
4800	16	625	1	0	16	125	2.5	0	10	250	1	0	7	119	2.5	0.04
7200	12	101	5.5	0.01	11	303	1	0.01	11	101	1.5	0.01	10	139	1	0.08
9600	16	125	2.5	0	10	250	1	0	10	125	1	0	7	149	1	0.13
14400	11	202	1.5	0.01	11	101	1.5	0.01	14	17	3.5	0.04	14	33	1.5	0.21
19200	10	250	1	0	10	125	1	0	10	25	2.5	0	16	13	2.5	0.16
38400	10	125	1	0	10	25	2.5	0	16	13	1.5	0.16	8	13	2.5	0.16
56000	7	49	2.5	0.04	13	33	1	0.1	13	11	1.5	0.1	7	17	1.5	0.04
115200	7	17	3.5	0.04	13	16	1	0.16	13	8	1	0.16	7	5	2.5	0.79
128000	15	25	1	0	15	5	2.5	0	11	1	8.5	0.27	12	1	6.5	0.16
230400	13	16	1	0.16	13	8	1	0.16	13	4	1	0.16	11	4	1	1.36
345600	9	1	15.5	0.44	10	7	1	0.79	10	1	3.5	0.79				
460800	13	8	1	0.16	13	4	1	0.16	13	2	1	0.16	11	2	1	1.36
576000	8	7	1.5	0.79	12	1	3.5	0.79	14	1	1.5	0.79	7	1	2.5	0.79
691200	10	7	1	0.79	10	1	3.5	0.79	7	1	2.5	0.79				
806400	7	1	8.5	0.04	15	2	1	0.79	10	1	1.5	0.79				
921600	13	4	1	0.16	13	2	1	0.16	13	1	1	0.16				
1105920	11	4	1	1.36	11	2	1	1.36					9	1	1	0.47
1382400	10		0.5	0.79	7		2 .5	0.79								
1536000	9	1	3.5	0.79	8	2	1	2.34								

Table 22-5. Baud Rate Programming

Baud Rate	SYS_CLK = 8 MHz				SYS_CLK = 6 MHz				SYS_CLK = 5 MHz				SYS_CLK = 4 MHz			
	O	N	P	%err	O	N	P	%err	O	N	P	%err	O	N	P	%err
300	7	401	9.5	0.00	16	1250	1.0	0.00	11	202	7.5	0.01	12	202	5.5	0.01
600	12	1111	1.0	0.01	16	625	1.0	0.00	11	101	7.5	0.01	12	101	5.5	0.01
1200	12	101	5.5	0.01	16	125	2.5	0.00	10	119	3.5	0.04	11	202	1.5	0.01
1800	8	101	5.5	0.01	11	303	1.0	0.01	11	101	2.5	0.01	11	202	1.0	0.01
2000	16	250	1.0	0.00	16	125	1.5	0.00	10	250	1.0	0.00	16	125	1.0	0.00
2400	11	303	1.0	0.01	10	250	1.0	0.00	7	119	2.5	0.04	11	101	1.5	0.01
3600	11	202	1.0	0.01	11	101	1.5	0.01	10	139	1.0	0.08	11	101	1.0	0.01
4800	11	101	1.5	0.01	10	125	1.0	0.00	7	149	1.0	0.13	14	17	3.5	0.04
7200	11	101	1.0	0.01	14	17	3.5	0.04	14	33	1.5	0.21	15	37	1.0	0.10
9600	14	17	3.5	0.04	10	25	2.5	0.00	16	13	2.5	0.16	7	17	3.5	0.04
14400	15	37	1.0	0.10	7	17	3.5	0.04	7	33	1.5	0.21	9	31	1.0	0.44
19200	7	17	3.5	0.04	16	13	1.5	0.16	8	13	2.5	0.16	16	13	1.0	0.16
38400	16	13	1.0	0.16	8	13	1.5	0.16	13	10	1.0	0.16	16	1	6.5	0.16
56000	13	11	1.0	0.10	9	12	1.0	0.79	15	6	1.0	0.79	13	1	5.5	0.10

Copyright © 2007–2013, Texas Instruments Incorporated

Table 22-5. Baud Rate Programming (continued)

115200	10	7	1.0	0.79	13	4	1.0	0.16	11	4	1.0	1.36	10	1	3.5	0.79
128000	9	7	1.0	0.79	16	3	1.0	2.34	13	3	1.0	0.16	9	1	3.5	0.79
230400	10	1	3.5	0.79	13	2	1.0	0.16	11	2	1.0	1.36	7	1	2.5	0.79
345600	15	1	1.5	2.88	7		2	.5	0.79							
460800	7		.5	0.79	13	1	1.0	0.16								
576000	7	2	1.0	0.79	7	1	1.5	0.79								
Baud Rate	**SYS_CLK = 3 MHz**				**SYS_CLK = 2 MHz**				**SYS_CLK = 1 MHz**				**SYS_CLK = 500 kHz**			
	O	**N**	**P**	**%err**	**O**	**N**	**P**	**%err**	**O**	**B**	**P**	**%err**	**O**	**N**	**P**	**%err**
300	16	250	2.5	0.00	12	101	5.5	0.01	11	202	1.5	0.01	11	101	1.5	0.01
600	16	125	2.5	0.00	11	202	1.5	0.01	11	101	1.5	0.01	14	17	3.5	0.04
1200	10	250	1.0	0.00	11	101	1.5	0.01	14	17	3.5	0.04	7	17	3.5	0.04
1800	11	101	1.5	0.01	11	101	1.0	0.01	15	37	1.0	0.10	9	31	1.0	0.44
2000	15	100	1.0	0.00	16	25	2.5	0.00	10	50	1.0	0.00	10	25	1.0	0.00
2400	10	125	1.0	0.00	14	17	3.5	0.04	7	17	3.5	0.04	16	13	1.0	0.16
3600	14	17	3.5	0.04	15	37	1.0	0.10	9	31	1.0	0.44	9	1	15.5	0.44
4800	10	25	2.5	0.00	7	17	3.5	0.04	16	13	1.0	0.16	16	1	6.5	0.16
7200	7	17	3.5	0.04	9	31	1.0	0.44	9	1	15.5	0.44	10	7	1.0	0.79
9600	16	13	1.5	0.16	16	13	1.0	0.16	16	1	6.5	0.16	8	1	6.5	0.16
14400	13	16	1.0	0.16	9	1	15.5	0.44	10	7	1.0	0.79	10	1	3.5	0.79
19200	8	13	1.5	0.16	16	1	6.5	0.16	8	1	6.5	0.16	13	2	1.0	0.16
38400	13	6	1.0	0.16	8	1	6.5	0.16	13	2	1.0	0.16	13	1	1.0	0.16
56000	9	6	1.0	0.79	9	4	1.0	0.79	9	2	1.0	0.79				
115200	13	2	1.0	0.16	7	1	2.5	0.79								
128000	16	1	1.5	2.34	8	2	1.0	2.34								
230400	13	1	1.0	0.16												

23 MICROWIRE/SPI INTERFACE

Microwire/Plus is a synchronous serial communications protocol, originally implemented in Texas Instruments' COP® and HPC families of microcontrollers to minimize the number of connections, and therefore the cost, of communicating with peripherals.

The CP3BT26 has an enhanced Microwire/SPI interface module (MWSPI) that can communicate with all peripherals that conform to Microwire or Serial Peripheral Interface (SPI) specifications. This enhanced Microwire interface is capable of operating as either a master or slave and in 8- or 16-bit mode. Figure 23-1shows a typical enhanced Microwire interface application.

The enhanced Microwire interface module includes the following features:

- Programmable operation as a Master or Slave
- Programmable shift-clock frequency (master only)
- Programmable 8- or 16-bit mode of operation
- 8- or 16-bit serial I/O data shift register
- Two modes of clocking data
- Serial clock can be low or high when idle
- 16-bit read buffer
- Busy bit, Read Buffer Full bit, and Overrun bit for polling and as interrupt sources
- Supports multiple masters
- Maximum bit rate of 12M bits/second (master mode) 6M bits/second (slave mode) at 24 MHz System Clock
- Supports very low-end slaves with the Slave Ready output
- Echo back enable/disable (Slave only)

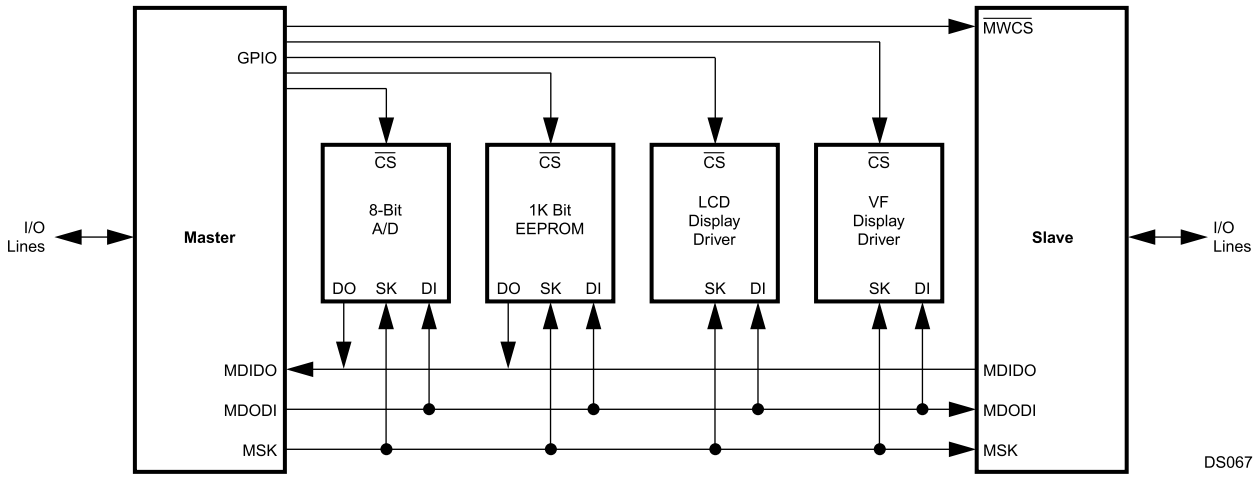

Figure 23-1. Microwire Interface

Copyright © 2007–2013, Texas Instruments Incorporated

23.1 MICROWIRE OPERATION

The Microwire interface allows several devices to be connected on one three-wire system. At any given time, one of these devices operates as the master while all other devices operate as slaves. The Microwire interface allows the device to operate either as a master or slave transferring 8- or 16- bits of data.

The master device supplies the synchronous clock (MSK) for the serial interface and initiates the data transfer. The slave devices respond by sending (or receiving) the requested data. Each slave device uses the master's clock for serially shifting data out (or in), while the master shifts the data in (or out).

The three-wire system includes: the serial data in signal (MDIDO for master mode, MDODI for slave mode), the serial data out signal (MDODI for master mode, MDIDO for slave mode), and the serial clock (MSK).

In slave mode, an optional fourth signal ($\overline{\text{MWCS}}$) may be used to enable the slave transmit. At any given time, only one slave can respond to the master. Each slave device has its own chip select signal ($\overline{\text{MWCS}}$) for this purpose.

Figure 23-2 shows a block diagram of the enhanced Microwire serial interface in the device.

23.1.1 Shifting

The Microwire interface is a full duplex transmitter/receiver. A 16-bit shifter, which can be split into a low and high byte, is used for both transmitting and receiving. In 8-bit mode, only the lower 8-bits are used to transfer data. The transmitted data is shifted out through MDODI pin (master mode) or MDIDO pin (slave mode), starting with the most significant bit. At the same time, the received data is shifted in through MDIDO pin (master mode) or MDODI pin (slave mode), also starting with the most significant bit first.

The shift in and shift out are controlled by the MSK clock. In each clock cycle of MSK, one bit of data is transmitted/received. The 16-bit shifter is accessible as the MWDAT register. Reading the MWDAT register returns the value in the read buffer. Writing to the MWDAT register updates the 16- bit shifter.

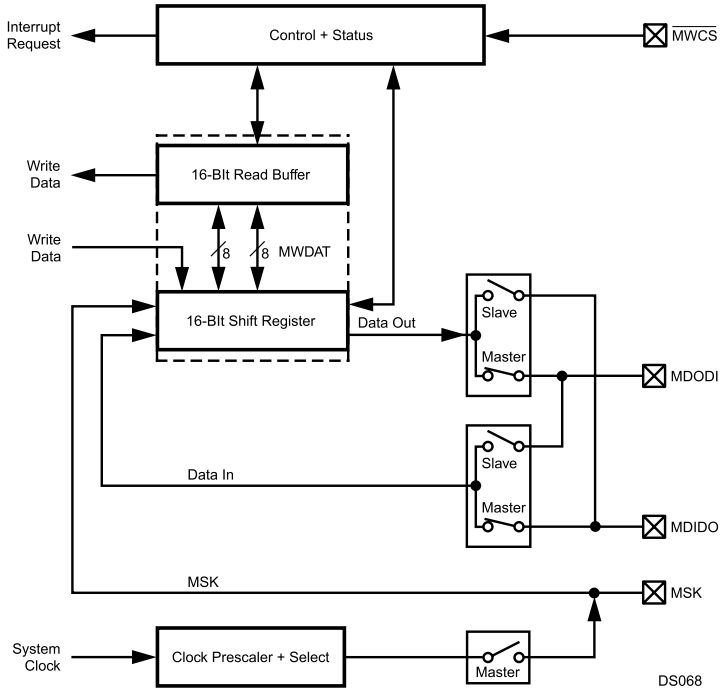

Figure 23-2. Microwire Block Diagram

23.1.2 Reading

The enhanced Microwire interface implements a double buffer on read. As illustrated in Figure 23-2, the double read buffer consists of the 16-bit shifter and a buffer, called the read buffer.

The 16-bit shifter loads the read buffer with new data when the data transfer sequence is completed and previous data in the read buffer has been read. In master mode, an Overrun error occurs when the read buffer is full, the 16-bit shifter is full and a new data transfer sequence starts.

When 8-bit mode is selected, the lower byte of the shift register is loaded into the lower byte of the read buffer and the read buffer's higher byte remains unchanged.

The RBF bit indicates if the MWDAT register holds valid data. The OVR bit indicates that an overrun condition has occurred.

23.1.3 Writing

The BSY bit indicates whether the MWDAT register can be written. All write operations to the MWDAT register update the shifter while the data contained in the read buffer is not affected. Undefined results will occur if the MWDAT register is written to while the BSY bit is set.

23.1.4 Clocking Modes

Two clocking modes are supported: the normal mode and the alternate mode.

In the normal mode, the output data, which is transmitted on the MDODI pin (master mode) or the MDIDO pin (slave mode), is clocked out on the falling edge of the shift clock MSK. The input data, which is received via the MDIDO pin (master mode) or the MDODI pin (slave mode), is sampled on the rising edge of MSK.

In the alternate mode, the output data is shifted out on the rising edge of MSK on the MDODI pin (master mode) or MDIDO pin (slave mode). The input data, which is received via MDIDO pin (master mode) or MDODI pin (slave mode), is sampled on the falling edge of MSK.

The clocking modes are selected with the SCM bit. The SCIDL bit allows selection of the value of MSK when it is idle (when there is no data being transferred). Various MSK clock frequencies can be programmed via the MCDV bits. Figure 23-3, Figure 23-4, Figure 23-5, and Figure 23-6 show the data transfer timing for the normal and the alternate modes with the SCIDL bit clear and set.

Note that when data is shifted out on MDODI (master mode) or MDIDO (slave mode) on the leading edge of the MSK clock, bit 14 (16-bit mode) is shifted out on the second leading edge of the MSK clock. When data are shifted out on MDODI (master mode) or MDIDO (slave mode) on the trailing edge of MSK, bit 14 (16-bit mode) is shifted out on the first trailing edge of MSK.

Copyright © 2007–2013, Texas Instruments Incorporated

23.2 MASTER MODE

In Master mode, the MSK pin is an output for the shift clock, MSK. When data is written to the MWDAT register, eight or sixteen MSK clocks, depending on the mode selected, are generated to shift the 8 or 16 bits of data, and then MSK goes idle again. The MSK idle state can be either high or low, depending on the SCIDL bit.

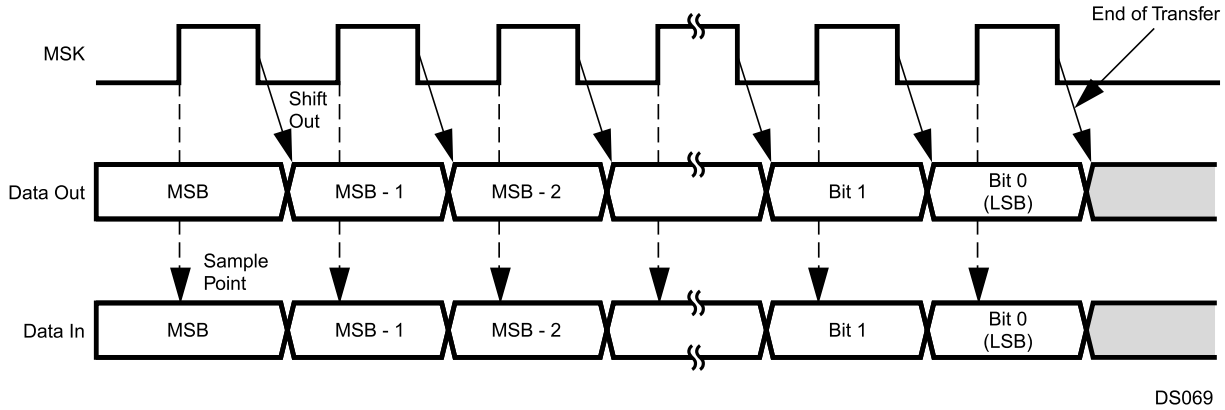

Figure 23-3. Normal Mode (SCIDL = 0)

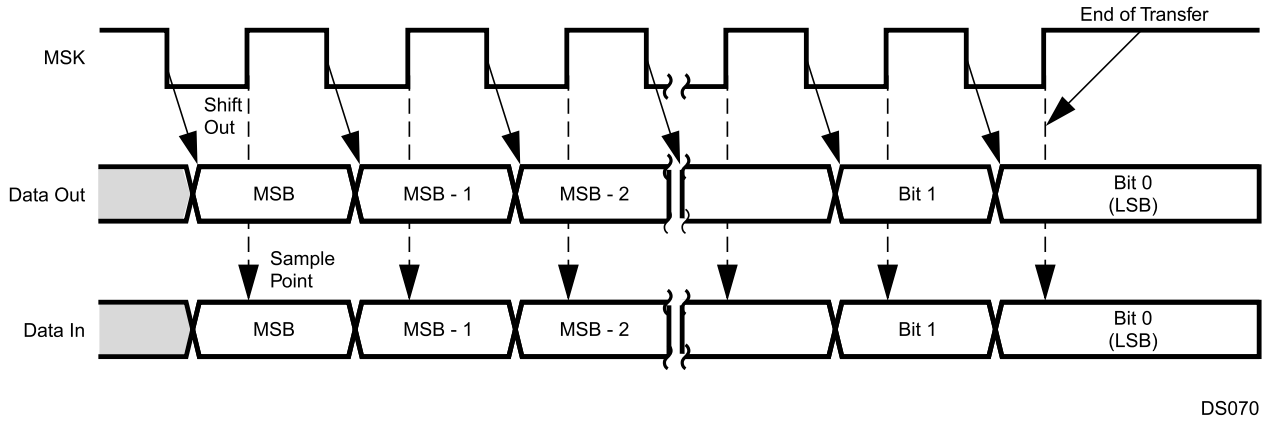

Figure 23-4. Normal Mode (SCIDL = 1)

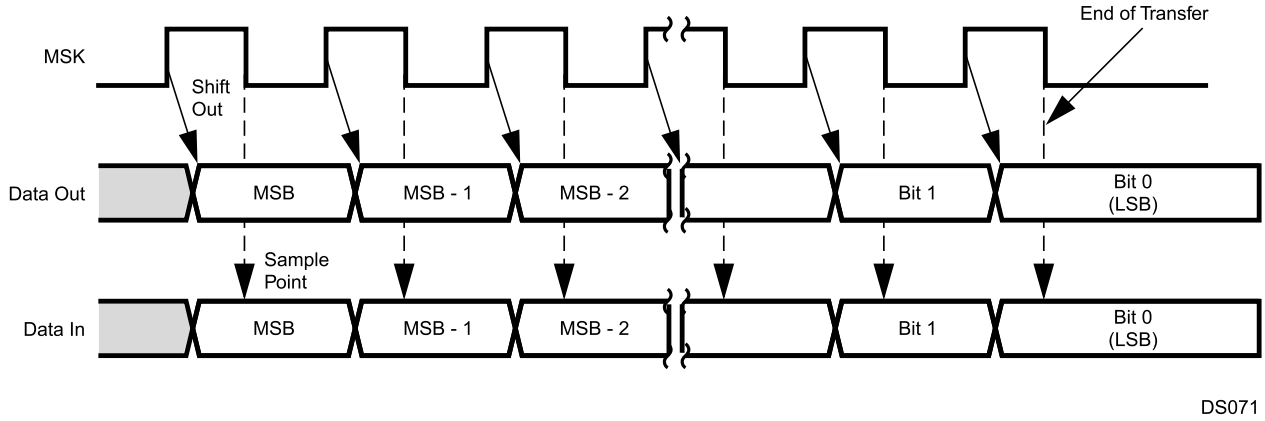

Figure 23-5. Alternate Mode (SCIDL = 0)

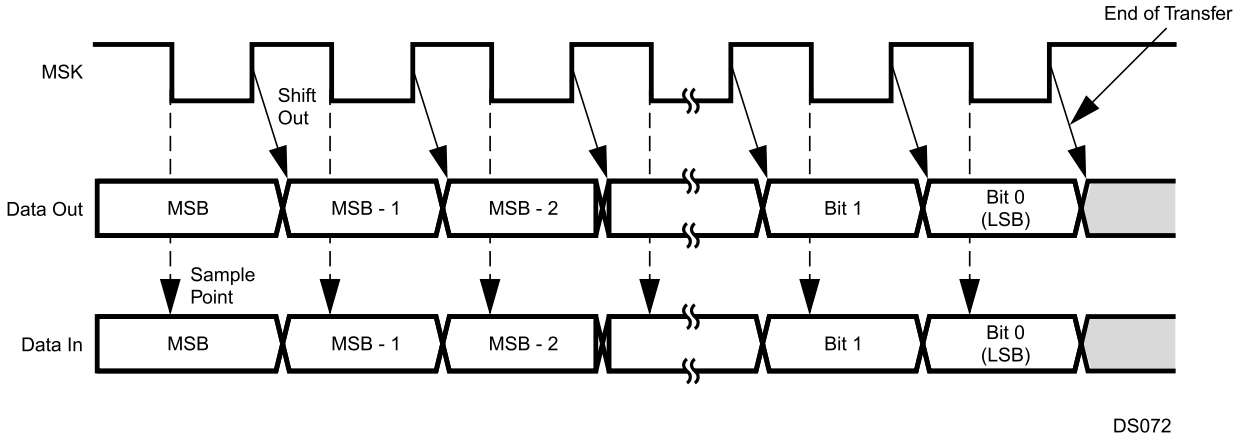

Figure 23-6. Alternate Mode (SCIDL = 1)

Copyright © 2007–2013, Texas Instruments Incorporated

23.3 SLAVE MODE

In Slave mode, the MSK pin is an input for the shift-clock MSK. MDIDO is placed in TRI-STATE mode when $\overline{\text{MWCS}}$ is inactive. Data transfer is enabled when $\overline{\text{MWCS}}$ is active.

The slave starts driving MDIDO when $\overline{\text{MWCS}}$ is active. The most significant bit (lower byte in 8-bit mode or upper byte in 16-bit mode) is output onto the MDIDO pin first. After eight or sixteen clocks (depending on the selected mode), the data transfer is completed.

If a new shift process starts before MWDAT was written, that is, while MWDAT does not contain any valid data, and the ECHO bit is set, the data received from MDODI is transmitted on MDIDO in addition to being shifted to MWDAT. If the ECHO bit is clear, the data transmitted on MDIDO is the data held in the MWDAT register, regardless of its validity. The master may negate the $\overline{\text{MWCS}}$ signal to synchronize the bit count between the master and the slave. In the case that the slave is the only slave in the system, $\overline{\text{MWCS}}$ can be tied to ground.

23.4 INTERRUPT GENERATION

Interrupts may be enabled for any of the conditions shown in Table 23-1.

Table 23-1. Microwire Interrupt Trigger Condition

Condition	Status Bit in the MWSTAT Register	Interrupt Enable Bit in the MWCTRL1 Register	Description
Not Busy	BSY	EIW	The shifter is ready for the next data transfer sequence.
Read Buffer Full	RBF	EIR	The read buffer is full and waiting to be unloaded.
Overrun	OVF	EIO	A new data transfer sequence started while both the shifter and the read buffer were full.

Figure 23-7 illustrates the interrupt generation logic of this module.

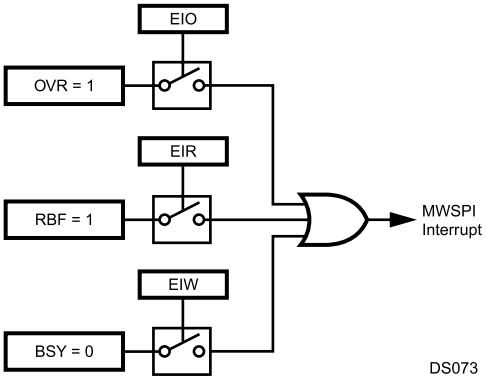

Figure 23-7. MWSPI Interrupts

23.5 MICROWIRE INTERFACE REGISTERS

Software interacts with the Microwire interface by accessing the Microwire registers. There are three such registers:

Table 23-2. Microwire Interface Registers

Name	Address	Description
MWDAT	FF F3A0h	Microwire Data Register
MWCTL	FF F3A2h	Microwire Control Register
MWSTAT	FF F3A4h	Microwire Status Register

23.5.1 Microwire Data Register (MWDAT)

The MWDAT register is a word-wide, read/write register used to transmit and receive data through the MDODI and MDIDO pins. The register format is shown below.

7							0
MWDAT							

Figure 23-8 shows the hardware structure of the register.

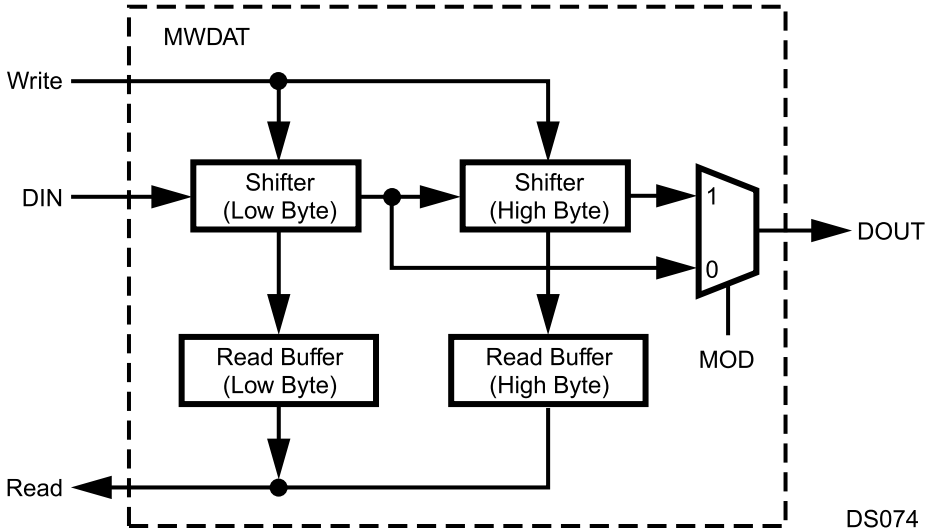

Figure 23-8. MWDAT Register

Copyright © 2007–2013, Texas Instruments Incorporated

23.5.2 MICROWIRE Control Register (MWCTL1)

The MWCTL1 register is a word-wide, read/write register used to control the Microwire module. To avoid clock glitches, the MWEN bit must be clear while changing the states of any other bits in the register. At reset, all non-reserved bits are cleared. The register format is shown below.

7	6	5	4	3	2	1	0
SCM	EIW	EIR	EIO	ECHO	MOD	MNS	MWEN

15	9	8
SCDV		SCIDL

MWEN — The Microwire Enable bit controls whether the Microwire interface module is enabled.
0 – Microwire module disabled.
1 – Microwire module enabled. Clearing this bit disables the module, clears the status bits in the Microwire status register (the BSY, RBF, and OVR bits in MWSTAT), and places the Microwire interface pins in the states described below.

Pin	State When Disabled
MSK	Master - SCIDL Bit Slave - Input
$\overline{\text{MWCS}}$	Input
MDIDO	Master - Input Slave - TRI_STATE
MDODI	Master - Known value Slave - Input

MNS — The Master/Slave Select bit controls whether the CP3BT26 is a master or slave. When clear, the device operates as a slave. When set, the device operates as the master.
0 – CP3BT26 is slave. 1 – CP3BT26 is master.

MOD — The Mode Select bit controls whether 8- or 16- bit mode is used. When clear, the device operates in 8-bit mode. When set, the device operates in 16-bit mode. This bit must only be changed when the module is disabled or idle (MWSTAT.BSY = 0).
0 – 8-bit mode. 1 – 16-bit mode.

ECHO — The Echo Back bit controls whether the echo back function is enabled in slave mode. This bit must be written only when the Microwire interface is idle (MWSTAT.BSY=0). The ECHO bit is ignored in master mode. The MWDAT register is valid from the time the register has been written until the end of the transfer. In the echo back mode, MDODI is transmitted (echoed back) on MDIDO if the MWDAT register does not contain any valid data. With the echo back function disabled, the data held in the MWDAT register is transmitted on MDIDO, whether or not the data is valid.
0 – Echo back disabled. 1 – Echo back enabled.

EIO — The Enable Interrupt on Overrun bit enables or disables the overrun error interrupt. When set, an interrupt is generated when the Receive Overrun Error bit (MWSTAT.OVR) is set. Otherwise, no interrupt is generated when an overrun error occurs. This bit must only be enabled in master mode.
0 – Disable overrun error interrupts. 1 – Enable overrun error interrupts.

EIR — The Enable Interrupt for Read bit controls whether an interrupt is generated when the read buffer becomes full. When set, an interrupt is generated when the Read Buffer Full bit (MWSTAT.RBF) is set. Otherwise, no interrupt is generated when the read buffer is full.
0 – No read buffer full interrupt. 1 – Interrupt when read buffer becomes full.

EIW — The Enable Interrupt for Write bit controls whether an interrupt is generated when the Busy bit (MWSTAT.BSY) is cleared, which indicates that a data transfer sequence has been completed and the read buffer is ready to receive the new data. Otherwise, no interrupt is generated when the Busy bit is cleared.
0 – No interrupt on data transfer complete. 1 – Interrupt on data transfer complete.

SCM — The Shift Clock Mode bit selects between the normal clocking mode and the alternate clocking mode. In the normal mode, the output data is clocked out on the falling edge of MSK and the input data is sampled on the rising edge of MSK. In the alternate mode, the output data is clocked out on the rising edge of MSK and the input data is sampled on the falling edge of MSK.
0 – Normal clocking mode. 1 – Alternate clocking mode.

SCIDL — The Shift Clock Idle bit controls the value of the MSK output when the Microwire module is idle. This bit must be changed only when the Microwire module is disabled (MEN = 0) or when no bus transaction is in progress (MWSTAT.BSY = 0).
0 – MSK is low when idle. 1 – MSK is high when idle

SCDV — The Shift Clock Divider Value field specifies the divisor used for generating the MSK shift clock from the System Clock. The divisor is 2 × (SCDV[6:0] + 1). Valid values are 0000001b to 1111111b, so the division ratio may range from 3 to 256. This field is ignored in slave mode (MWCTL1.MNS=0).

23.5.3 Microwire Status Register (MWSTAT)

The MWSTAT register is a word-wide, read-only register that shows the current status of the Microwire interface module. At reset, all non-reserved bits are clear. The register format is shown below.

15 … 3	2	1	0
Reserved	OVR	RBF	BSY

BSY — The Busy bit, when set, indicates that the Microwire shifter is busy. In master mode, the BSY bit is set when the MWDAT register is written. In slave mode, the bit is set on the first leading edge of MSK when MWCS is asserted or when the MWDAT register is written, whichever occurs first. In both master and slave modes, this bit is cleared when the Microwire data transfer sequence is completed and the read buffer is ready to receive the new data; in other words, when the previous data held in the read buffer has already been read. If the previous data in the read buffer has not been read and new data has been received into the shift register, the BSY bit will not be cleared, as the transfer could not be completed because the contents of the shift register could not be transferred into the read buffer.
0 – Microwire shifter is not busy.
1 – Microwire shifter is busy.

RBF — The Read Buffer Full bit, when set, indicates that the Microwire read buffer is full and ready to be read by software. It is set when the shifter loads the read buffer, which occurs upon completion of a transfer sequence if the read buffer is empty. The RBF bit is updated when the MWDAT register is read. At that time, the RBF bit is cleared if the shifter does not contain any new data (in other words, the shifter is not receiving data or has not yet received a full byte of data). The RBF bit remains set if the shifter already holds new data at the time that MWDAT is read. In that case, MWDAT is immediately reloaded with the new data and is ready to be read by software.
0 – Microwire read buffer is not full.
1 – Microwire read buffer is full.

OVR — The Receive Overrun Error bit, when set in master mode, indicates that a receive overrun error has occurred. This error occurs when the read buffer is full, the 8-bit shifter is full, and a new data transfer sequence starts. This bit is undefined in slave mode. The OVR bit, once set, remains set until cleared by software. Software clears this bit by writing a 1 to its bit position. Writing a 0 to this bit position has no effect. No other bits in the MWSTAT register are affected by a write operation to the register.
0 – No receive overrun error has occurred.
1 – Receive overrun error has occurred.

Copyright © 2007–2013, Texas Instruments Incorporated

24 ACCESS.BUS INTERFACE

The ACCESS.bus interface module (ACB) is a two-wire serial interface compatible with the ACCESS.bus physical layer. It permits easy interfacing to a wide range of low-cost memories and I/O devices, including: EEPROMs, SRAMs, timers, A/D converters, D/A converters, clock chips, and peripheral drivers. It is compatible with Intel's SMBus and Philips' I^2C bus. The ACB module can be configured as a bus master or slave, and can maintain bidirectional communications with both multiple master and slave devices.

This section presents an overview of the bus protocol, and its implementation by the ACB module.

- ACCESS.bus master and slave
- Supports polling and interrupt-controlled operation
- Generate a wake-up signal on detection of a Start Condition, while in power-down mode
- Optional internal pull-up on SDA and SCL pins

24.1 ACB PROTOCOL OVERVIEW

The ACCESS.bus protocol uses a two-wire interface for bi-directional communication between the devices connected to the bus. The two interface signals are the Serial Data Line (SDA) and the Serial Clock Line (SCL). These signals should be connected to the positive supply, through pull-up resistors, to keep the signals high when the bus is idle.

The ACCESS.bus protocol supports multiple master and slave transmitters and receivers. Each bus device has a unique address and can operate as a transmitter or a receiver (though some peripherals are only receivers).

During data transactions, the master device initiates the transaction, generates the clock signal, and terminates the transaction. For example, when the ACB initiates a data transaction with an ACCESS.bus peripheral, the ACB becomes the master. When the peripheral responds and transmits data to the ACB, their master/slave (data transaction initiator and clock generator) relationship is unchanged, even though their transmitter/receiver functions are reversed.

24.1.1 Data Transactions

One data bit is transferred during each clock period. Data is sampled during the high phase of the serial clock (SCL). Consequently, throughout the clock high phase, the data must remain stable (see Figure 24-1). Any change on the SDA signal during the high phase of the SCL clock and in the middle of a transaction aborts the current transaction. New data must be driven during the low phase of the SCL clock. This protocol permits a single data line to transfer both command/control information and data using the synchronous serial clock.

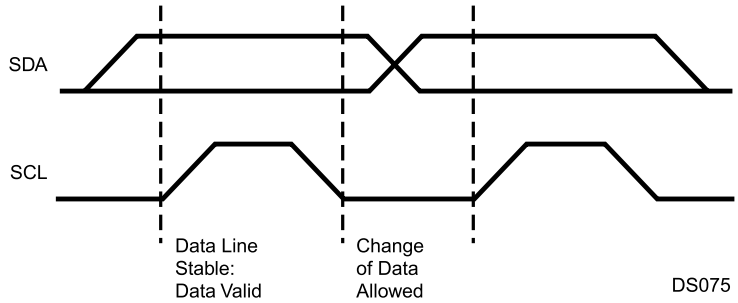

Figure 24-1. Bit Transfer

Each data transaction is composed of a Start Condition, a number of byte transfers (programmed by software), and a Stop Condition to terminate the transaction. Each byte is transferred with the most significant bit first, and after each byte, an Acknowledge signal must follow.

At each clock cycle, the slave can stall the master while it handles the previous data, or prepares new data. This can be performed for each bit transferred or on a byte boundary by the slave holding SCL low to extend the clock-low period. Typically, slaves extend the first clock cycle of a transfer if a byte read has not yet been stored, or if the next byte to be transmitted is not yet ready. Some microcontrollers with limited hardware support for ACCESS.bus extend the access after each bit, to allow software time to handle this bit.

Start and Stop

The ACCESS.bus master generates Start and Stop Conditions (control codes). After a Start Condition is generated, the bus is considered busy and it retains this status until a certain time after a Stop Condition is generated. A high-to-low transition of the data line (SDA) while the clock (SCL) is high indicates a Start Condition. A low-to-high transition of the SDA line while the SCL is high indicates a Stop Condition (Figure 24-2).

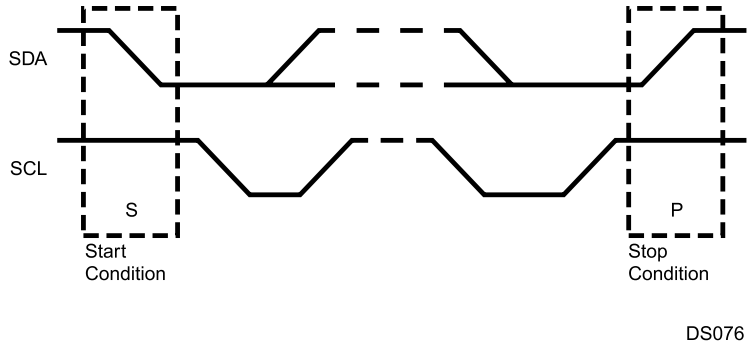

Figure 24-2. Start and Stop Conditions

In addition to the first Start Condition, a repeated Start Condition can be generated in the middle of a transaction. This allows another device to be accessed, or a change in the direction of the data transfer.

Copyright © 2007–2013, Texas Instruments Incorporated

Acknowledge Cycle

The Acknowledge Cycle consists of two signals: the acknowledge clock pulse the master sends with each byte transferred, and the acknowledge signal sent by the receiving device (Figure 24-3).

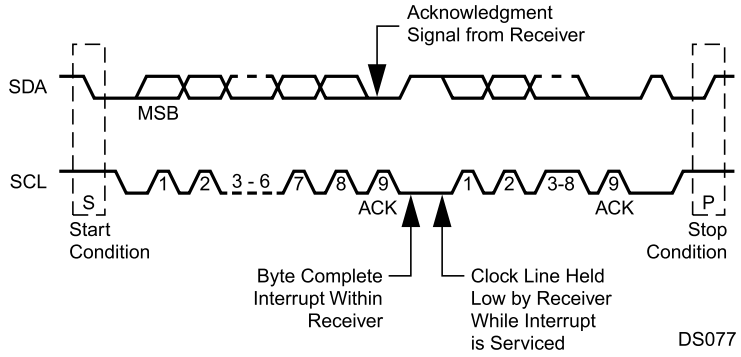

Figure 24-3. ACCESS.bus Data Transaction

The master generates an acknowledge clock pulse after each byte transfer. The receiver sends an acknowledge signal after every byte received. There are two exceptions to the "acknowledge after every byte" rule:

- When the master is the receiver, it must indicate to the transmitter an end-of-data condition by not-acknowledging ("negative acknowledge") the last byte clocked out of the slave. This "negative acknowledge" still includes the acknowledge clock pulse (generated by the master), but the SDA line is not pulled down.
- When the receiver is full, otherwise occupied, or a problem has occurred, it sends a negative acknowledge to indicate that it cannot accept additional data bytes.

Addressing Transfer Formats

Each device on the bus has a unique address. Before any data is transmitted, the master transmits the address of the slave being addressed. The slave device should send an acknowledge signal on the SDA signal, once it recognizes its address.

The address is the first seven bits after a Start Condition. The direction of the data transfer (R/W) depends on the bit sent after the address (the eighth bit). A low-to-high transition during a SCL high period indicates the Stop Condition, and ends the transaction (Figure 24-4).

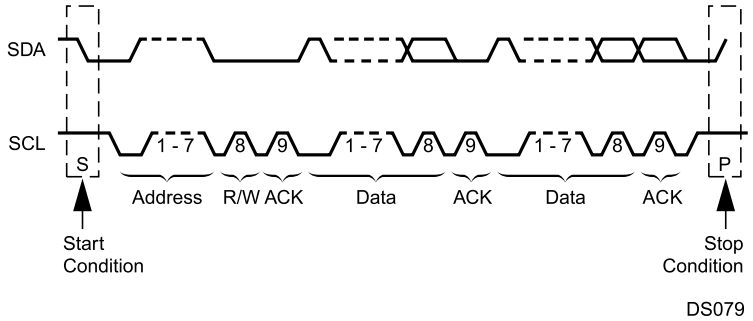

Figure 24-4. A Complete ACCESS.bus Data Transaction

When the address is sent, each device in the system compares this address with its own. If there is a match, the device considers itself addressed and sends an acknowledge signal. Depending upon the state of the R/W bit (1= read, 0 = write), the device acts as a transmitter or a receiver.

The ACCESS.bus protocol allows sending a general call address to all slaves connected to the bus. The first byte sent specifies the general call address (00h) and the second byte specifies the meaning of the general call (for example, “Write slave address by software only”). Those slaves that require the data acknowledge the call and become slave receivers; the other slaves ignore the call.

Arbitration on the Bus

Arbitration is required when multiple master devices attempt to gain control of the bus simultaneously. Control of the bus is initially determined according to address bits and clock cycle. If the masters are trying to address the same bus device, data comparisons determine the outcome of this arbitration. In master mode, the device immediately aborts a transaction if the value sampled on the SDA lines differs from the value driven by the device. (Exceptions to this rule are SDA while receiving data; in these cases the lines may be driven low by the slave without causing an abort.)

The SCL signal is monitored for clock synchronization and allows the slave to stall the bus. The actual clock period will be the one set by the master with the longest clock period or by the slave stall period. The clock high period is determined by the master with the shortest clock high period.

When an abort occurs during the address transmission, the master that identifies the conflict should give up the bus, switch to slave mode, and continue to sample SDA to see if it is being addressed by the winning master on the ACCESS. bus.

24.2 ACB FUNCTIONAL DESCRIPTION

The ACB module provides the physical layer for an ACCESS. bus compliant serial interface. The module is configurable as either a master or slave device. As a slave, the ACB module may issue a request to become the bus master.

24.2.1 Master Mode

An ACCESS.bus transaction starts with a master device requesting bus mastership. It sends a Start Condition, followed by the address of the device it wants to access. If this transaction is successfully completed, software can assume that the device has become the bus master.

For a device to become the bus master, software should perform the following steps:

1. Set the ACBCTL1.START bit, and configure the ACBCTL1.INTEN bit to the desired operation mode (Polling or Interrupt). This causes the ACB to issue a Start Condition on the ACCESS.bus, as soon as the ACCESS.bus is free (ACBCST.BB=0). It then stalls the bus by holding SCL low.
2. If a bus conflict is detected, (that is, some other device pulls down the SCL signal before this device does), the ACBST.BER bit is set.
3. If there is no bus conflict, the ACBST.MASTER and ACBST.SDAST bits are set.
4. If the ACBCTL1.INTEN bit is set, and either the ACBST. BER bit or the ACBST.SDAST bit is set, an interrupt is sent to the ICU.

Sending the Address Byte

Once this device is the active master of the ACCESS.bus (ACBST.MASTER = 1), it can send the address on the bus. The address should not be this device’s own address as specified in the ACBADDR.ADDR field if the ACBADDR. SAEN bit is set or the ACBADDR2.ADDR field if the ACBADDR2.SAEN bit is set, nor should it be the global call address if the ACBST.GCMTCH bit is set.

To send the address byte use the following sequence:

1. Configure the ACBCTL1.INTEN bit according to the desired operation mode. For a receive transaction where software wants only one byte of data, it should set the ACBCTL1.ACK bit. If only an address needs to be sent, set the ACBCTL1.STASTRE bit.
2. Write the address byte (7-bit target device address), and the direction bit, to the ACBSDA register. This causes the module to generate a transaction. At the end of this transaction, the acknowledge bit received is copied to the ACBST.NEGACK bit. During the transaction, the SDA and SCL signals are

 Copyright © 2007–2013, Texas Instruments Incorporated

continuously checked for conflict with other devices. If a conflict is detected, the transaction is aborted, the ACBST.BER bit is set, and the ACBST.MASTER bit is cleared.

3. If the ACBCTL1.STASTRE bit is set, and the transaction was successfully completed (that is, both the ACBST. BER and ACBST.NEGACK bits are cleared), the ACBST.STASTR bit is set. In this case, the ACB stalls any further ACCESS.bus operations (that is, holds SCL low). If the ACBCTL1.INTE bit is set, it also sends an interrupt to the core.
4. If the requested direction is transmit, and the start transaction was completed successfully (that is, neither the ACBST.NEGACK nor ACBST.BER bit is set, and no other master has accessed the device), the ACBST. SDAST bit is set to indicate that the module is waiting for service.
5. If the requested direction is receive, the start transaction was completed successfully, and the ACBCTL1.STASTRE bit is clear, the module starts receiving the first byte automatically.
6. Check that both the ACBST.BER and ACBST.NEGACK bits are clear. If the ACBCTL1.INTEN bit is set, an interrupt is generated when either the ACBST.BER or ACBST.NEGACK bit is set.

Master Transmit

After becoming the bus master, the device can start transmitting data on the ACCESS.bus. To transmit a byte, software must:

1. Check that the BER and NEGACK bits in the ACBST register are clear and the ACBST.SDAST bit is set. Also, if the ACBCTL1.STASTRE bit is set, check that the ACBST.STASTR bit is clear.
2. Write the data byte to be transmitted to the ACBSDA register.

When the slave responds with a negative acknowledge, the ACBST.NEGACK bit is set and the ACBST.SDAST bit remains cleared. In this case, if the ACBCTL1.INTEN bit is set, an interrupt is sent to the core.

Master Receive

After becoming the bus master, the device can start receiving data on the ACCESS.bus. To receive a byte, software must:

1. Check that the ACBST.SDAST bit is set and the ACBST.BER bit is clear. Also, if the ACBCTL1.STASTRE bit is set, check that the ACBST.STASTR bit is clear.
2. Set the ACBCTL1.ACK bit, if the next byte is the last byte that should be read. This causes a negative acknowledge to be sent.
3. Read the data byte from the ACBSDA register.

Master Stop

A Stop Condition may be issued only when this device is the active bus master (ACBST.MASTRER = 1). To end a transaction, set the ACBCTL1.STOP bit before clearing the current stall bit (that is, the ACBST.SDAST, ACBST.NEGACK, or ACBST.STASTR bit). This causes the module to send a Stop Condition immediately, and clear the ACBCTL1.STOP bit.

The ACB module can stall the ACCESS.bus between transfers while waiting for the core's response. The ACCESS.bus is stalled by holding the SCL signal low after the acknowledge cycle. Note that this is interpreted as the beginning of the following bus operation. Software must make sure that the next operation is prepared before the bit that causes the bus stall is cleared.

The bits that can cause a stall in master mode are:

- Negative acknowledge after sending a byte (ACBSTNEGACK = 1).
- ACBST.SDAST bit is set.
- If the ACBCTL1.STASTRE bit is set, after a successful start (ACBST.STASTR = 1).

Repeated Start

A repeated start is performed when this device is already the bus master (ACBST.MASTER = 1). In this case, the ACCESS.bus is stalled and the ACB waits for the core handling due to: negative acknowledge (ACBST.NEGACK = 1), empty buffer (ACBST.SDAST = 1), or a stop-after-start (ACBST.STASTR = 1).

For a repeated start:

1. Set the ACBCTL1.START bit.
2. In master receive mode, read the last data item from the ACBSDA register.
3. Follow the address send sequence, as described in Sending the Address Byte.
4. If the ACB was waiting for handling due to ACBST.STASTR = 1, clear it only after writing the requested address and direction to the ACBSDA register.

Master Error Detections

The ACB detects illegal Start or Stop Conditions (that is, a Start or Stop Condition within the data transfer, or the acknowledge cycle) and a conflict on the data lines of the ACCESS.bus. If an illegal action is detected, the BER bit is set, and the MASTER mode is exited (the MASTER bit is cleared).

Bus Idle Error Recovery

When a request to become the active bus master or a restart operation fails, the ACBST.BER bit is set to indicate the error. In some cases, both this device and the other device may identify the failure and leave the bus idle. In this case, the start sequence may not be completed and the ACCESS.bus may remain deadlocked.

To recover from deadlock, use the following sequence:

1. Clear the ACBST.BER and ACBCST.BB bits.
2. Wait for a time-out period to check that there is no other active master on the bus (that is, the ACBCST.BB bit remains clear).
3. Disable, and re-enable the ACB to put it in the non-addressed slave mode.
4. At this point, some of the slaves may not identify the bus error. To recover, the ACB becomes the bus master by issuing a Start Condition and sends an address field; then issue a Stop Condition to synchronize all the slaves.

24.2.2 Slave Mode

A slave device waits in Idle mode for a master to initiate a bus transaction. Whenever the ACB is enabled, and it is not acting as a master (that is, ACBST.MASTER = 0), it acts as a slave device.

Once a Start Condition on the bus is detected, this device checks whether the address sent by the current master matches either:

- The ACBADDR.ADDR value if the ACBADDR.SAEN bit is set.
- The ACBADDR2.ADDR value if the ACBADDR2.SAEN bit is set.
- The general call address if the ACBCTL1.GCM bit is set.

This match is checked even when the ACBST.MASTER bit is set. If a bus conflict (on SDA or SCL) is detected, the ACBST.BER bit is set, the ACBST.MASTER bit is cleared, and this device continues to search the received message for a match. If an address match, or a global match, is detected:

1. This device asserts its data pin during the acknowledge cycle.
2. The ACBCST.MATCH, ACBCST.MATCHAF (or ACBCST.GCMTCH if it is a global call address match, or ACBCST.ARPMATCH if it is an ARP address), and ACBST.NMATCH in the ACBCST register are set. If the ACBST.XMIT bit is set (that is, slave transmit mode), the ACBST.SDAST bit is set to indicate that the buffer is empty.

 Copyright © 2007–2013, Texas Instruments Incorporated

3. If the ACBCTL1.INTEN bit is set, an interrupt is generated if both the INTEN and NMINTE bits in the ACBCTL1 register are set.
4. Software then reads the ACBST.XMIT bit to identify the direction requested by the master device. It clears the ACBST.NMATCH bit so future byte transfers are identified as data bytes.

Slave Receive and Transmit

Slave Receive and Transmit are performed after a match is detected and the data transfer direction is identified. After a byte transfer, the ACB extends the acknowledge clock until software reads or writes the ACBSDA register. The receive and transmit sequence are identical to those used in the master routine.

Slave Bus Stall

When operating as a slave, this device stalls the ACCESS.bus by extending the first clock cycle of a transaction in the following cases:

- The ACBST.SDAST bit is set.
- The ACBST.NMATCH, and ACBCTL1.NMINTE bits are set.

Slave Error Detections

The ACB detects illegal Start and Stop Conditions on the ACCESS.bus (that is, a Start or Stop Condition within the data transfer or the acknowledge cycle). When an illegal Start or Stop Condition is detected, the BER bit is set and the MATCH and GMATCH bits are cleared, causing the module to be an unaddressed slave.

Power Down

When this device is in Power Save, Idle, or Halt mode, the ACB module is not active but retains its status. If the ACB is enabled (ACBCTL2.ENABLE = 1) on detection of a Start Condition, a wake-up signal is issued to the MIWU module. Use this signal to switch this device to Active mode.

The ACB module cannot check the address byte for a match following the start condition that caused the wake-up event for this device. The ACB responds with a negative acknowledge, and the device should resend both the Start Condition and the address after this device has had time to wake up.

Check that the ACBCST.BUSY bit is inactive before entering Power Save, Idle, or Halt mode. This guarantees that the device does not acknowledge an address sent and stop responding later.

24.2.3 SDA and SCL Pins Configuration

The SDA and SCL pins are driven as open-drain signals. For more information, see the I/O configuration section.

24.2.4 ACB Clock Frequency Configuration

The ACB module permits software to set the clock frequency used for the ACCESS.bus clock. The clock is set by the ACBCTL2.SCLFRQ field. This field determines the SCL clock period used by this device. This clock low period may be extended by stall periods initiated by the ACB module or by another ACCESS.bus device. In case of a conflict with another bus master, a shorter clock high period may be forced by the other bus master until the conflict is resolved.

24.3 ACCESS.BUS INTERFACE REGISTERS

The ACCESS.bus interface uses the registers listed in Table 24-1.

Table 24-1. ACCESS.bus Interface Registers

Name	Address	Description
ACBSDA	FF F2A0h	ACB Serial Data Register
ACBST	FF F2A2h	ACB Status Register
ACBCST	FF F2A4h	ACB Control Status Register
ACBCTL	FF F2A6h	ACB Control Register 1
ACBCTL2	FF F2AAh	ACB Control Register 2
ACBCTL3	FF F2AEh	ACB Control Register 3
ACBADDR	FF F2A8h	ACB Own Address Register 1
ACBADDR2	FF F2ACh	ACB Own Addres Register 2

24.3.1 ACB Serial Data Register (ACBSDA)

The ACBSDA register is a byte-wide, read/write shift register used to transmit and receive data. The most significant bit is transmitted (received) first and the least significant bit is transmitted (received) last. Reading or writing to the ACBSDA register is allowed when ACBST.SDAST is set; or for repeated starts after setting the START bit. An attempt to access the register in other cases produces unpredictable results.

7							0
DATA							

Copyright © 2007–2013, Texas Instruments Incorporated

24.3.2 ACB Status Register (ACBST)

The ACBST register is a byte-wide, read-only register that maintains current ACB status. When reset, disabled, or in Halt or Idle modes, ACBST is cleared.

7	6	5	4	3	2	1	0
SLVSTP	SDAST	BER	NEGACK	STASTR	NMATCH	MASTER	XMT

XMIT — The Direction Bit bit is set when the ACB module is currently in master/slave transmit mode. Otherwise it is cleared. 0 – Receive mode. 1 – Transmit mode.

MASTER — The Master bit indicates that the module is currently in master mode. It is set when a request for bus mastership succeeds. It is cleared upon arbitration loss (BER is set) or the recognition of a Stop Condition.
0 – Slave mode.
1 – Master mode.

NMATCH — The New match bit is set when the address byte following a Start Condition, or repeated starts, causes a match or a global-call match. The NMATCH bit is cleared when written with 1. Writing 0 to NMATCH is ignored. If the ACBCTL1.INTEN bit is set, an interrupt is sent when this bit is set.
0 – No match.
1 – Match or global-call match.

STASTR — The Stall After Start bit is set by the successful completion of an address sending (that is, a Start Condition sent without a bus error, or negative acknowledge), if the ACBCTL1.STASTRE bit is set. This bit is ignored in slave mode. When the STASTR bit is set, it stalls the bus by pulling down the SCL line, and suspends any other action on the bus (for example, receives first byte in master receive mode). In addition, if the ACBCTL1.INTEN bit is set, it also sends an interrupt to the core. Writing 1 to the STASTR bit clears it. It is also cleared when the module is disabled. Writing 0 to the STASTR bit has no effect.
0 – No stall after start condition.
1 – Stall after successful start.

NEGACK — The Negative Acknowledge bit is set by hardware when a transmission is not acknowledged on the ninth clock. (In this case, the SDAST bit is not set.) Writing 1 to NEGACK clears it. It is also cleared when the module is disabled. Writing 0 to the NEGACK bit is ignored.
0 – No transmission not acknowledged condition.
1 – Transmission not acknowledged.

BER — The Bus Error bit is set by the hardware when a Start or Stop Condition is detected during data transfer (that is, Start or Stop Condition during the transfer of bits 2 through 8 and acknowledge cycle), or when an arbitration problem is detected. Writing 1 to the BER bit clears it. It is also cleared when the module is disabled. Writing 0 to the BER bit is ignored.
0 – No bus error occurred.
1 – Bus error occurred.

SDAST — The SDA Status bit indicates that the SDA data register is waiting for data (transmit, as master or slave) or holds data that should be read (receive, as master or slave). This bit is cleared when reading from the ACBSDA register during a receive, or when written to during a transmit. When the ACBCTL1.START bit is set, reading the ACBSDA register does not clear the SDAST bit. This enables the ACB to send a repeated start in master receive mode.
0 – ACB module is not waiting for data transfer.
1 – ACB module is waiting for data to be loaded or unloaded.

SLVSTP — The Slave Stop bit indicates that a Stop Condition was detected after a slave transfer (that is, after a slave transfer in which MATCH or GCMATCH is set). Writing 1 to SLVSTP clears it. It is also cleared when the module is disabled. Writing 0 to SLVSTP is ignored.
0 – No stop condition after slave transfer occurred.
1 – Stop condition after slave transfer occurred.

Copyright © 2007–2013, Texas Instruments Incorporated

24.3.3 ACB Control Status Register (ACBCST)

The ACBCST register is a byte-wide, read/write register that maintains current ACB status. When reset, disabled, or in Halt or Idle modes, the non-reserved bits of ACBCST are cleared.

7	6	5	4	3	2	1	0
Reserved		TGSCL	TSDA	GCMTCH	MATCH	BB	BUSY

BUSY — The BUSY bit indicates that the ACB module is:

- Generating a Start Condition
- In Master mode (ACBST.MASTER is set)
- In Slave mode (ACBCST.MATCH or ACBCST.GCMTCH is set)
- In the period between detecting a Start and completing the reception of the address byte. After this, the ACB either becomes not busy or enters slave mode.
- The BUSY bit is cleared by the completion of any of the above states, and by disabling the module. BUSY is a read only bit. It must always be written with 0.

0 – ACB module is not busy.
1 – ACB module is busy.

BB — The Bus Busy bit indicates the bus is busy. It is set when the bus is active (that is, a low level on either SDA or SCL) or by a Start Condition. It is cleared when the module is disabled, on detection of a Stop Condition, or when writing 1 to this bit. See Usage Hints for a description of the use of this bit. This bit should be set when either the SDA or SCL signals are low. This is done by sampling the SDA and SCL signals continuously and setting the bit if one of them is low. The bit remains set until cleared by a STOP condition or written with 1.
0 – Bus is not busy.
1 – Bus is busy.

MATCH — The Address Match bit indicates in slave mode when ACBADDR.SAEN is set and the first seven bits of the address byte (the first byte transferred after a Start Condition) matches the 7-bit address in the ACBADDR register, or when ACBADDR2.SAEN is set and the first seven bits of the address byte matches the 7-bit address in the ACBADDR2 register. It is cleared by Start Condition or repeated Start and Stop Condition (including illegal Start or Stop Condition).
0 – No address match occurred.
1 – Address match occurred.

GCMTCH — The Global Call Match bit is set in slave mode when the ACBCTL1.GCMEN bit is set and the address byte (the first byte transferred after a Start Condition) is 00h. It is cleared by a Start Condition or repeated Start and Stop Condition (including illegal Start or Stop Condition).
0 – No global call match occurred.
1 – Global call match occurred.

TSDA — The Test SDA bit samples the state of the SDA signal. This bit can be used while recovering from an error condition in which the SDA signal is constantly pulled low by a slave that went out of sync. This bit is a read-only bit. Data written to it is ignored.

TGSCL — The Toggle SCL bit enables toggling the SCL signal during error recovery. When the SDA signal is low, writing 1 to this bit drives the SCL signal high for one cycle. Writing 1 to TGSCL when the SDA signal is high is ignored. The bit is cleared when the clock toggle is completed.
0 – Writing 0 has no effect.
1 – Writing 1 toggles the SDA signal high for one cycle.

Copyright © 2007–2013, Texas Instruments Incorporated

24.3.4 ACB Control Register 1 (ACBCTL1)

The ACBCTL1 register is a byte-wide, read/write register that configures and controls the ACB module. When reset, disabled, or in Halt or Idle modes, the ACBCTL1 register is cleared.

7	6	5	4	3	2	1	0
STASTRE	NMINTE	GCMEN	ACK	Res.	INTEN	STOP	START

START — The Start bit is set to generate a Start Condition on the ACCESS.bus. The START bit is cleared when the Start Condition is sent, or upon detection of a Bus Error (ACBST.BER = 1). This bit should be set only when in Master mode, or when requesting Master mode. If this device is not the active master of the bus (ACBST.MASTER = 0), setting the START bit generates a Start Con0dition as soon as the ACCESS.bus is free (ACBCST.BB = 0). An address send sequence should then be performed. If this device is the active master of the bus (ACBST.MASTER = 1), when the START bit is set, a write to the ACBSDA register generates a Start Condition, then the ACBSDA data is transmitted as the slave's address and the requested transfer direction. This case is a repeated Start Condition. It may be used to switch the direction of the data flow between the master and the slave, or to choose another slave device without using a Stop Condition in between.
0 – Writing 0 has no effect.
1 – Writing 1 generates a Start condition.

STOP — The Stop bit in master mode generates a Stop Condition that completes or aborts the current message transfer. This bit clears itself after the Stop condition is issued.
0 – Writing 0 has no effect.
1 – Writing 1 generates a Stop condition.

INTEN — The Interrupt Enable bit controls generating ACB interrupts. When the INTEN bit is cleared ACB interrupt is disabled. When the INTEN bit is set, interrupts are enabled.
0 – ACB interrupts disabled.
1 – ACB interrupts enabled. An interrupt is generated (the interrupt signals to the ICU is high) on any of the following events:

- An address MATCH is detected (ACBST.NMATCH = 1) and the NMINTE bit is set.
- A Bus Error occurs (ACBST.BERR = 1).
- Negative acknowledge after sending a byte (ACBST.NEGACK = 1).
- An interrupt is generated on acknowledge of each transaction (same as hardware setting the ACBST.SDAST bit).
- If ACBCTL1.STASTRE = 1, in master mode after a successful start (ACBST.STASTR = 1).
- Detection of a Stop Condition while in slave receive mode (ACBST.SLVSTP = 1).

ACK — The Acknowledge bit holds the value this device sends in master or slave mode during the next acknowledge cycle. Setting this bit to 1 instructs the transmitting device to stop sending data, since the receiver either does not need, or cannot receive, any more data. This bit is cleared after the first acknowledge cycle. This bit is ignored when in transmit mode.

GCMEN — The Global Call Match Enable bit enables the match of an incoming address byte to the general call address (Start Condition followed by address byte of 00h) while the ACB is in slave mode. When cleared, the ACB does not respond to a global call.
0 – Global call matching disabled.
1 – Global call matching enabled.

NMINTE — The New Match Interrupt Enable controls whether ACB interrupts are generated on new matches. Set the NMINTE bit to enable the interrupt on a new match (that is, when ACBST.NMATCH is set). The interrupt is issued only if the ACBCTL1.INTEN bit is set.
0 – New match interrupts disabled.
1 – New match interrupts enabled.

STASTRE — The Stall After Start Enable bit enables the stall after start mechanism. When enabled, the ACB is stalled after the address byte. When the STASTRE bit is clear, the ACBST.STASTR bit is always clear.
0 – No stall after start.
1 – Stall-after-start enabled.

24.3.5 ACB Control Register 2 (ACBCTL2)

The ACBCTL2 register is a byte-wide, read/write register that controls the module and selects the ACB clock rate. At reset, the ACBCTL2 register is cleared.

7 … 1	0
SCLFRQ6:0	ENABLE

ENABLE The Enable bit controls the ACB module. When this bit is set, the ACB module is enabled. When the Enable bit is clear, the ACB module is disabled, the ACBCTL1, ACBST, and ACBCST registers are cleared, and the clocks are halted.

0 – ACB module disabled. 1 – ACB module enabled.

SCLFRQ The SCL Frequency field specifies the SCL period (low time and high time) in master mode. The clock low time and high time are defined as follows: tSCLl = tSCLh = 2 × SCLFRQ × tCLK Where tCLK is this device's clock period when in Active mode. The SCLFRQ field may be programmed to values in the range of 0001000b through 1111111b. Using any other value has unpredictable results.

24.3.6 ACB Control Register 3 (ACBCTL3)

The ACBCTL3 register is a byte-wide, read/write register that expands the clock prescaler field and enables ARP matches. At reset, the ACBCTL3 register is cleared.

7 … 3	2	1 … 0
Reserved	ARPMEN	SCLFRQ8:7

ARPMEN The ARP Match Enable bit enables the matching of an incoming address byte to the SMBus ARP address 110 0001b general call address (Start condition followed by address byte of 00h), while the ACB is in slave mode.
0 – ACB does not respond to ARP addresses.
1 – ARP address matching enabled.

SCLFRQ The SCL Frequency field specifies the SCL period (low time and high time) in master mode. The ACBCTL3 register provides a 2-bit expansion of this field, with the remaining 7 bits being held in the ACBCTL2 register.

24.3.7 ACB Own Address Register 1 (ACBADDR1)

The ACBADDR1 register is a byte-wide, read/write register that holds the module's first ACCESS.bus address. After reset, its value is undefined.

7	6 … 0
SAEN	ADDR

ADDR The Own Address field holds the first 7-bit ACCESS. bus address of this device. When in slave mode, the first 7 bits received after a Start Condition are compared to this field (first bit received to bit 6, and the last to bit 0). If the address field matches the received data and the SAEN bit is set, a match is detected.

SAEN The Slave Address Enable bit controls whether address matching is performed in slave mode. When set, the SAEN bit indicates that the ADDR field holds a valid address and enables the match of ADDR to an incoming address byte. When cleared, the ACB does not check for an address match.
0 – Address matching disabled.
1 – Address matching enabled0.

24.3.8 ACB Own Address Register 2 (ACBADDR2)

The ACBADDR2 register is a byte-wide, read/write register that holds the module's second ACCESS.bus address. After reset, its value is undefined.

7	6 … 0
SAEN	ADDR

The Own Address field holds the second 7-bit ACCESS.bus address of this device. When in slave mode, the first 7 bits received after a Start Condition are compared to this field (first bit received to bit 6, and the last to bit 0). If the address field matches the received data and the SAEN bit is set, a match is detected.

The Slave Address Enable bit controls whether address matching is performed in slave mode. When set, the SAEN bit indicates that the ADDR field holds a valid address and enables the match of ADDR to an incoming address byte. When cleared, the ACB does not check for an address match.
0 – Address matching disabled.
1 – Address matching enabled.

Copyright © 2007–2013, Texas Instruments Incorporated

24.4 USAGE HINTS

- When the ACB module is disabled, the ACBCST.BB bit is cleared. After enabling the ACB (ACBCTL2.ENABLE = 1) in systems with more than one master, the bus may be in the middle of a transaction with another device, which is not reflected in the BB bit. There is a need to allow the ACB to synchronize to the bus activity status before issuing a request to become the bus master, to prevent bus errors. Therefore, before issuing a request to become the bus master for the first time, software should check that there is no activity on the bus by checking the BB bit after the bus allowed time-out period.
- When waking up from power down, before checking the ACBCST.MATCH bit, test the ACBCST.BUSY bit to make sure that the address transaction has finished.
- The BB bit is intended to solve a deadlock in which two, or more, devices detect a usage conflict on the bus and both devices cease being bus masters at the same time. In this situation, the BB bits of both devices are active (because each deduces that there is another master currently performing a transaction, while in fact no device is executing a transaction), and the bus would stay locked until some device sends a ACBCTL1.STOP condition. The ACBCST.BB bit allows software to monitor bus usage, so it can avoid sending a STOP signal in the middle of the transaction of some other device on the bus. This bit detects whether the bus remains unused over a certain period, while the BB bit is set
- In some cases, the bus may get stuck with the SCL or SDA lines active. A possible cause is an erroneous Start or Stop Condition that occurs in the middle of a slave receive session. When the SCL signal is stuck active, there is nothing that can be done, and it is the responsibility of the module that holds the bus to release it. When the SDA signal is stuck active, the ACB module enables the release of the bus by using the following sequence. Note that in normal cases, the SCL signal may be toggled only by the bus master. This protocol is a recovery scheme which is an exception that should be used only in the case when there is no other master on the bus. The recovery scheme is as follows:

1. Disable and re-enable the module to set it into the not addressed slave mode.
2. Set the ACBCTL1.START bit to make an attempt to issue a Start Condition.
3. Check if the SDA signal is active (low) by reading ACBCST.TSDA bit. If it is active, issue a single SCL cycle by writing 1 to ACBCST.TGSCL bit. If the SDA line is not active, continue from step 5.
4. Check if the ACBST.MASTER bit is set, which indicates that the Start Condition was sent. If not, repeat step 3 and 4 until the SDA signal is released.
5. Clear the BB bit. This enables the START bit to be executed. Continue according to Bus Idle Error Recovery.

24.4.1 Avoiding Bus Error During Write Transaction

A Bus Error (BER) may occur during a write transaction if the data register is written at a very specific time. The module generates one system-clock cycle setup time of SDA to SCL vs. the minimum time of the clock divider ratio.

The problem can be masked within the driver by dynamically dividing-by-half the SCL width immediately after the slave address is successfully sent and before writing to the ACBSDA register. This has the effect of forcing SCL into the stretch state.

The following code example is the relevant segment of the ACCESS.bus driver addressing this issue.

```
/*%%%%%%%%%%%%%%%%%%%%%%%%%%%%%%%%%%%%%%%%%%%%%%%%%%%%%%%%%%%%%%%%%%%%%%%%%%%%%%%%%%%%%%%%%%%%%%%%%%%%%%%%%%%%%%%%%%%%%%
; NAME: ACBRead      Reads "Count" byte(s) from selected I2C Slave.  If read address differs from previous
;                    Read or Write operation (as recorded in NextAddress), a "dummy" write transaction is
;                    initiated to reset the address to the desired location.  This is followed by a repeated
;                    Start sequence and the Read transaction.  All transactions begin with a call to ACBStartX
;                    which sends the Start condition and Slave address.  Checks for errors throughout process.
;
; PARAMETERS:   UBYTE   Slave   -   Slave Device Address. Must be of format 0xXXXX0000
;               UWORD   Addrs   -   Byte/Array address (extended addressing mode uses two byte address)
;               UWORD   Count   -   Number of bytes to read
;               UBYTE   *buf    -   Pointer to receive buffer
;
; CALLS:     ACBStartX
;
; RETURNED: error status
;%%%%%%%%%%%%%%%%%%%%%%%%%%%%%%%%%%%%%%%%%%%%%%%%%%%%%%%%%%%%%%%%%%%%%%%%%%%%%%%%%%%%%%%%%%%%%%%%%%%%%%%%%%%%%%%%%%%%%*/

UWORD   ACBRead (UBYTE Slave, UWORD Addrs, UWORD Count, UBYTE *buf)
{
    ACB_T   *acb;
    UBYTE   err, *rcv;
    UWORD   Timeout;

    acb =   (ACB_T*)ACB_ADDRESS;                    /* Set pointer to ACB module                        */
                                                    /* If the indicated address differs from the last   */
    if (Addrs != NextAddress) {
                                                    /* recorded access (i.e. Random Read), we must first */
                                                    /* send a "dummy" write to the desired new address.. */
        NextAddress =   Addrs;                      /* Update last address placeholder                  */

    KeyInit();
KBD_OUT &= ~BIT0;

                                                    /* Send start bit and Slave address...              */
        if ((err = ACBStartX (Slave | (Addrs >> 7 & 0x0E), ACB_WRITE, 0)))

            return (err);                           /* If unsuccessful, return error code               */

 //   KBD_OUT &= ~BIT0;

        acb->ACBsda =   (UBYTE)Addrs;               /* Send new address byte                            */

KBD_OUT &= ~BIT0;

        Timeout =   1000;                           /* Set timeout                                      */
                                                    /* Wait for xmitter to be ready...zzzzzzzz          */
        while (!(acb->ACBst & ACBSDAST) && !(acb->ACBst & ACBBER) && Timeout--);

        if (acb->ACBst & ACBBER) {
                                                    /* If a bus error occurs while sending address, clear */
            acb->ACBst   |=  ACBBER;                /* the error flag and return error status           */

            return (ACBERR_COLLISION);
        }

KBD_OUT &= ~BIT0;

        if (!Timeout)                               /* If we timeout, return error                      */
            return (ACBERR_TIMEOUT);
    }
                                                    /* (Re)Send start bit and Slave address...          */
    if ((err = ACBStartX (Slave | (Addrs >> 7 & 0x0E), ACB_READ, Count)))
                                                    /* If error, return                                 */
        return (err);

    rcv =   buf;                                    /* Get address of read buffer                       */
                                                    /* Read Count bytes into user's buffer              */
    while (Count) {

        if (Count-- == 1)                           /* If this the final byte, or only one requested, send */
            acb->ACBctl1    |=  ACBACK;             /* the NACK bit after reception                     */

        Timeout =   1000;                           /* Set timeout                                      */

        while (!(acb->ACBst & ACBSDAST) && Timeout--);

        if (!Timeout)                               /* Timed out??                                      */
                                                    /* YES - return error                               */
            return (ACBERR_TIMEOUT);

        *rcv++  =   acb->ACBsda;                    /* NO - Read byte from Recv register                */
                                                    /* Adjust current address placeholder               */
        NextAddress++;
    }
```


Copyright © 2007–2013, Texas Instruments Incorporated

```
    acb->ACBctl1    |=  ACBSTOP;                    /* Send STOP bit                                      */
                                                    /* Return success status....                          */
    return (ACB_NOERR);
}

/*%%%%%%%%%%%%%%%%%%%%%%%%%%%%%%%%%%%%%%%%%%%%%%%%%%%%%%%%%%%%%%%%%%%%%%%%%%%%%%%%%%%%%%%%%%%%%%%%%%%%%%%%%%%%%%%%%
; NAME: ACBStartX   Initiates an ACB bus transaction by sending the Start bit, followed by the Slave address
;                   and R/W flag.  Checks for any ACB errors throughout this sequence and returns status.
;
; PARAMETERS:   UBYTE   Slave   -   I2C address of Slave device
;               UBYTE   R_nW    -   Read/Write flag (0x01 or 0x00)
;               UWORD   Count   -   Desired number of bytes (read/write)
;
; CALLS:
;
; RETURNED: error/success
;%%%%%%%%%%%%%%%%%%%%%%%%%%%%%%%%%%%%%%%%%%%%%%%%%%%%%%%%%%%%%%%%%%%%%%%%%%%%%%%%%%%%%%%%%%%%%%%%%%%%%%%%%%%%%%%%*/

UWORD   ACBStartX (UBYTE Slave, UBYTE R_nW, UWORD Count)
{
    ACB_T   *acb;
    UWORD   Timeout;
                                                    /* Get address of ACB module                          */
    acb =   (ACB_T*)ACB_ADDRESS;
                                                    /* If Bus is Busy and we're NOT the Master, return err */
    if (acb->ACBcst & ACBBB && !(acb->ACBst & ACBMASTER))
        return (ACBERR_NOTMASTER);
                                                    /* If we're good to go, send Start condition          */
    acb->ACBctl1    |=  ACBSTART;
                                                    /* Check if we're the Bus Master with timeout         */
    Timeout =   100;

    while (!(acb->ACBst & ACBSDAST) && Timeout--)   /* Related to bus error problem                       */
    {
        if (acb->ACBst & ACBBER) {                  /* If collision occurs, clear error and return status */

            acb->ACBst  |=  ACBBER;

            return (ACBERR_COLLISION);
        }
    }

    if (!Timeout)                                   /* If timeout, we must NOT be the Master...signal error */
        return (ACBERR_NOTMASTER);
                                                    /* Now, send the address and R/W flag...              */
    acb->ACBsda =   Slave | R_nW;                   /* Send address and R/W flag                          */

    Timeout =   1000;                               /* Failsafe for lockup                                */
                                                    /* Wait for address to be sent and ACK'd              */
    while (!(acb->ACBst & ACBSDAST) &&
        !(acb->ACBst & ACBNEGACK)&&
        --Timeout) {

        if (acb->ACBst & ACBBER) {                  /* If a bus error occurs while sending address, clear */
            acb->ACBst  |=  ACBBER;                 /* the error flag and return error status             */

            return (ACBERR_COLLISION);
        }
    }
KBD_OUT |= BIT0; // OScope marker

    if (!Timeout)                                   /* If timeout, signal error                           */
        return (ACBERR_TIMEOUT);
                                                    /* Or if Slave does not reply, report busy/error      */
    else if (acb->ACBst & ACBNEGACK)
        return (ACBERR_NEGACK);
                                                    /* Otherwise return success                           */
    else {

        return (ACB_NOERR);
    }
```

25 TIMING AND WATCHDOG MODULE

The Timing and Watchdog Module (TWM) generates the clocks and interrupts used for timing periodic functions in the system; it also provides Watchdog protection over software execution.

The TWM is designed to provide flexibility in system design by configuring various clock ratios and by selecting the Watchdog clock source. After setting the TWM configuration, software can lock it for a higher level of protection against erroneous software action. Once the TWM is locked, only reset can release it.

25.1 TWM STRUCTURE

(1)is a block diagram showing the internal structure of the Timing and Watchdog module. There are two main sections: the Real-Time Timer (T0) section at the top and the Watchdog section on the bottom.

All counting activities of the module are based on the Slow Clock (SLCLK). A prescaler counter divides this clock to make a slower clock. The prescaler factor is defined by a 3- bit field in the Timer and Watchdog Prescaler register, which selects either 1, 2, 4, 8, 16, or 32 as the divisor. Therefore, the prescaled clock period can be 2, 4, 8, 16, or 32 times the Slow Clock period. The prescaled clock signal is called T0IN.

25.2 TIMER T0 OPERATION

Timer T0 is a programmable 16-bit down counter that can be used as the time base for real-time operations such as a periodic audible tick. It can also be used to drive the Watchdog circuit.

The timer starts counting from the value loaded into the TWMT0 register and counts down on each rising edge of T0IN. When the timer reaches zero, it is automatically reloaded from the TWMT0 register and continues counting down from that value. Therefore, the frequency of the timer is:

$$f_{TIMER} = f_{SLCLK} / (TWTM0 + 1) \times \text{prescaler} \quad (34)$$

When an external crystal oscillator is used as the SLCLK source or when the fast clock is divided accordingly, f_{SLCLK} is 32.768 kHz.

The value stored in TWMT0 can range from 0001h to FFFFh.

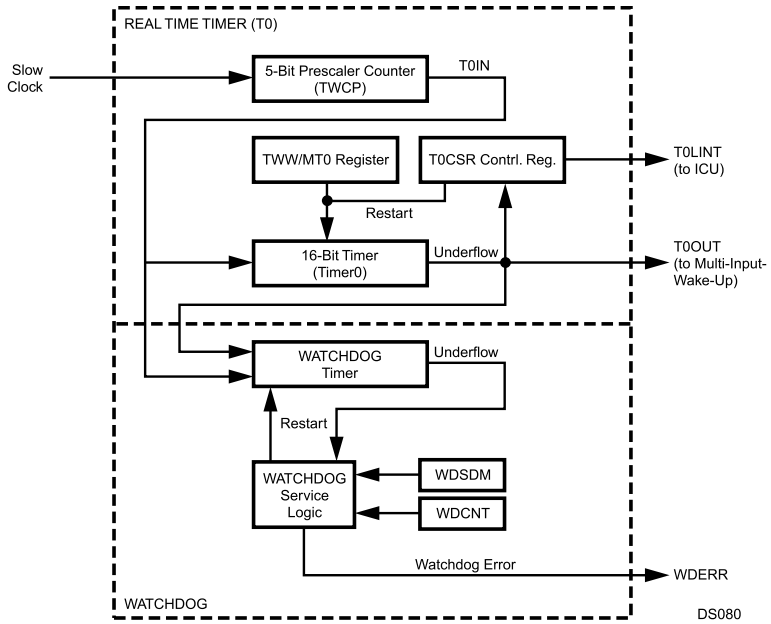

Figure 25-1. Timing and Watchdog Module Block Diagram

(1) NVSTR Hold Time is determined by the following equation: $t_{END} = T_{clk} \times (FTDIV + 1) \times (FTEND + 1)$, where T_{clk} is the System Clock period, FTDIV is the contents of the FMPSR or FSMPSR register, and FTEND is the contents of the FMEND or FSMEND register.

Copyright © 2007–2013, Texas Instruments Incorporated

When the counter reaches zero, an internal timer signal called T0OUT is set for one T0IN clock cycle. This signal sets the TC bit in the TWMT0 Control and Status Register (T0CSR). It also generates an interrupt (IRQ14), when enabled by the T0CSR.T0INTE bit. T0OUT is also an input to the MIWU (see Multi-Input Wake-Up), so an edge-triggered interrupt is also available through this alternative mechanism.

If software loads the TWMT0 register with a new value, the timer uses that value the next time that it reloads the 16-bit timer register (in other words, after reaching zero). Software can restart the timer at any time (on the very next edge of the T0IN clock) by setting the Restart (RST) bit in the T0CSR register. The T0CSR.RST bit is cleared automatically upon restart of the 16-bit timer.

Note: To enter Power Save or Idle mode after setting the T0CSR.RST bit, software must wait for the reset operation to complete before performing the switch.

25.3 WATCHDOG OPERATION

The Watchdog is an 8-bit down counter that operates on the rising edge of a specified clock source. At reset, the Watchdog is disabled; it does not count and no Watchdog signal is generated. A write to either the Watchdog Count (WDCNT) register or the Watchdog Service Data Match (WDSDM) register starts the counter. The Watchdog counter counts down from the value programmed in the WDCNT register. Once started, only a reset can stop the Watchdog from operating.

The Watchdog can be programmed to use either T0OUT or T0IN as its clock source (the output and input of Timer T0, respectively). The TWCFG.WDCT0I bit controls this clock selection.

Software must periodically “service” the Watchdog. There are two ways to service the Watchdog, the choice depending on the programmed value of the WDSDME bit in the Timer and Watchdog Configuration (TWCFG) register.

If the TWCFG.WDSDME bit is clear, the Watchdog is serviced by writing a value to the WDCNT register. The value written to the register is reloaded into the Watchdog counter. The counter then continues counting down from that value.

If the TWCFG.WDSDME bit is set, the Watchdog is serviced by writing the value 5Ch to the Watchdog Service Data Match (WDSDM) register. This reloads the Watchdog counter with the value previously programmed into the WDCNT register. The counter then continues counting down from that value.

A Watchdog error signal is generated by any of the following events:

- The Watchdog serviced too late.
- The Watchdog serviced too often.
- The WDSDM register is written with a value other than 5Ch when WDSDM type servicing is enabled (TWCFG.WDSDME = 1).

A Watchdog error condition resets the device.

25.3.1 Register Locking

The Timer and Watchdog Configuration (TWCFG) register is used to set the Watchdog configuration. It controls the Watchdog clock source (T0IN or T0OUT), the type of Watchdog servicing (using WDCNT or WDSDM), and the locking state of the TWCFG, TWCPR, TIMER0, T0CSR, and WDCNT registers. A register that is locked cannot be read or written. A write operation is ignored and a read operation returns unpredictable results.

If the TWCFG register is itself locked, it remains locked until the device is reset. Any other locked registers also remain locked until the device is reset. This feature prevents a runaway program from tampering with the programmed Watchdog function.

25.3.2 Power Save Mode Operation

The Timer and Watchdog Module is active in both the Power Save and Idle modes. The clocks and counters continue to operate normally in these modes. The WDSDM register is accessible in the Power Save and Idle modes, but the other TWM registers are accessible only in the Active mode. Therefore, Watchdog servicing must be carried out using the WDSDM register in the Power Save or Idle mode.

In the Halt mode, the entire device is frozen, including the Timer and Watchdog Module. On return to Active mode, operation of the module resumes at the point at which it was stopped.

Note: After a restart or Watchdog service through WDCNT, do not enter Power Save mode for a period equivalent to 5 Slow Clock cycles.

25.4 TWM REGISTERS

The TWM registers controls the operation of the Timing and Watchdog Module. There are six such registers:

Table 25-1. TWM Registers

Name	Address	Description
TWCFG	FF FF20h	Timer and Watchdog Configuration Register
TWCP	FF FF22h	Timer and Watchdog Clock Prescaler Register
TWMT0	FF FF24h	TWM Timer 0 Register
T0CSR	FF FF26h	TWMT0 Control and Status Register
WDCNT	FF FF28h	Watchdog Count Register
WDSDM	FF FF2Ah	Watchdog Service Data Match Register

The WDSDM register is accessible in both Active and Power Save mode. The other TWM registers are accessible only in Active mode.

Copyright © 2007–2013, Texas Instruments Incorporated

25.4.1 The TWCFG register is a byte-wide, read/write register that selects the Watchdog clock input and service method, and also allows the Watchdog registers to be selectively locked. A locked register cannot be read or written; a read operation returns unpredictable values and a write operation is ignored. Once a lock bit is set, that bit cannot be cleared until the device is reset. At reset, the non-reserved bits of the register are cleared. The register format is shown below.

7	6	5	4	3	2	1	0
Res.		WDSDME	WDCT0I	LWDCNT	LTWMT0	LTWCP	LTWCFG

LTWCFG — The Lock TWCFG Register bit controls access to the TWCFG register. When clear, access to the TWCFG register is allowed. When set, the TWCFG register is locked.
0 – TWCFG register unlocked.
1 – TWCFG register locked.

LTWCP — The Lock TWCP Register bit controls access to the TWCP register. When clear, access to the TWCP register is allowed. When set, the TWCP register is locked.
0 – TWCP register unlocked.
1 – TWCP register locked.

LTWMT0 — The Lock TWMT0 Register bit controls access to the TWMT0 register. When clear, access to the TWMT0 and T0CSR registers are allowed. When set, the TWMT0 and T0CSR registers are locked.
0 – TWMT0 register unlocked.
1 – TWMT0 register locked.

LWDCNT — The Lock LDWCNT Register bit controls access to the LDWCNT register. When clear, access to the LDWCNT register is allowed. When set, the LDWCNT register is locked.
0 – LDWCNT register unlocked.
1 – LDWCNT register locked.

WDCT0I — The Watchdog Clock from T0IN bit selects the clock source for the Watchdog timer. When clear, the T0OUT signal (the output of Timer T0) is used as the Watchdog clock. When set, the T0IN signal (the prescaled Slow Clock) is used as the Watchdog clock.
0 – Watchdog timer is clocked by T0OUT.
1 – Watchdog timer is clocked by T0IN.

WDSDME — The Watchdog Service Data Match Enable bit controls which method is used to service the Watchdog timer. When clear, Watchdog servicing is accomplished by writing a count value to the WDCNT register; write operations to the Watchdog Service Data Match (WDSDM) register are ignored. When set, Watchdog servicing is accomplished by writing the value 5Ch to the WDSDM register.
0 – Write a count value to the WDCNT register to service the Watchdog timer.
1 – Write 5Ch to the WDSDM register to service the Watchdog timer

25.4.2 Timer and Watchdog Clock Prescaler Register (TWCP)

The TWCP register is a byte-wide, read/write register that specifies the prescaler value used for dividing the low-frequency clock to generate the T0IN clock. At reset, the non-reserved bits of the register are cleared. The register format is shown below.

7	3	2	0
Reserved		MDIV	

Table 25-2.

MDIV	Clock Divisor (fSCLK = 32.768 kHz)	T0IN Frequency
000	3	2.768
00	2	16.384
010	4	8.192
011	8	4.096
100	16	2.056
101	32	1.024
Other	Reserved	N/A

25.4.3 TWM Timer 0 Register (TWMT0)

The TWMT0 register is a word-wide, read/write register that defines the T0OUT interrupt rate. At reset, TWMT0 register is initialized to FFFFh. The register format is shown below.

15	0
PRESET	

PRESET — The Timer T0 Preset field holds the value used to reload Timer T0 on each underflow. Therefore, the frequency of the Timer T0 interrupt is the frequency of T0IN divided by (PRESET+1). The allowed values of PRESET are 0001h through FFFFh.

25.4.4 TWMT0 Control and Status Register (T0CSR)

The T0CSR register is a byte-wide, read/write register that controls Timer T0 and shows its current status. At reset, the non-reserved bits of the register are cleared. The register format is shown below.

7 5	4	3	2	1	0
Reserved	FRZT0E	WDLTD	ToINTE	TC	RST

RST — The Restart bit is used to reset Timer T0. When this bit is set, it forces the timer to reload the value in the TWMT0 register on the next rising edge of the selected input clock. The RST bit is reset automatically by the hardware on the same rising edge of the selected input clock. Writing a 0 to this bit position has no effect. At reset, the non-reserved bits of the register are cleared.
0 – Writing 0 has no effect.
1 – Writing 1 resets Timer T0.

TC — The Terminal Count bit is set by hardware when the Timer T0 count reaches zero and is cleared when software reads the T0CSR register. It is a read-only bit. Any data written to this bit position is ignored. The TC bit is not cleared if FREEZE mode is asserted by an external debugging system.
0 – Timer T0 did not count down to 0.
1 – Timer T0 counted down to 0.

T0INTE — The Timer T0 Interrupt Enable bit enables an interrupt to the CPU each time the Timer T0 count reaches zero. When this bit is clear, Timer T0 interrupts are disabled.
0 – Timer T0 interrupts disabled.
1 – Timer T0 interrupts enabled.

WDLTD — The Watchdog Last Touch Delay bit is set when either WDCNT or WDSDM is written and the data transfer to the Watchdog is in progress (see WDCNT and WDSDM register description). When clear, it is safe to switch to Power Save mode.
0 – No data transfer to the Watchdog is in progress, safe to enter Power Save mode.
1 – Data transfer to the Watchdog in progress.

FRZT0E — The Freeze Timer0 Enable bit controls whether TImer 0 is stopped in FREEZE mode. If this bit is set, the Timer 0 is frozen (stopped) when the FREEZE input to the TWM is asserted. If the FRZT0E bit is clear, only the Watchdog timer is frozen by asserting the FREEZE input signal. After reset, this bit is clear.
0 – Timer T0 unaffected by FREEZE mode.
1 – Timer T0 stopped in FREEZE mode.

25.4.5 Watchdog Count Register (WDCNT)

The WDCNT register is a byte-wide, write-only register that holds the value that is loaded into the Watchdog counter each time the Watchdog is serviced. The Watchdog is started by the first write to this register. Each successive write to this register restarts the Watchdog count with the written value. At reset, this register is initialized to 0Fh.

7	0
PRESET	

Copyright © 2007–2013, Texas Instruments Incorporated

25.4.6 Watchdog Service Data Match Register (WDSDM)

The WSDSM register is a byte-wide, write-only register used for servicing the Watchdog. When this type of servicing is enabled (TWCFG.WDSDME = 1), the Watchdog is serviced by writing the value 5Ch to the WSDSM register. Each such servicing reloads the Watchdog counter with the value previously written to the WDCNT register. Writing any data other than 5Ch triggers a Watchdog error. Writing to the register more than once in one Watchdog clock cycle also triggers a Watchdog error signal. If this type of servicing is disabled (TWCFG.WDSDME = 0), any write to the WSDSM register is ignored.

25.5 WATCHDOG PROGRAMMING PROCEDURE

The highest level of protection against software errors is achieved by programming and then locking the Watchdog registers and using the WDSDM register for servicing. This is the procedure:

1. Write the desired values into the TWM Clock Prescaler register (TWCP) and the TWM Timer 0 register (TWMT0) to control the T0IN and T0OUT clock rates. The frequency of T0IN can be programmed to any of six frequencies ranging from 1/32 × f_{SLCLK} to f_{SLCLK}. The frequency of T0OUT is equal to the frequency of T0IN divided by (1+ PRESET), in which PRESET is the value written to the TWMT0 register.
2. Configure the Watchdog clock to use either T0IN or T0OUT by setting or clearing the TWCFG.WDCT0I bit.
3. Write the initial value into the WDCNT register. This starts operation of the Watchdog and specifies the maximum allowed number of Watchdog clock cycles between service operations.
4. Set the T0CSR.RST bit to restart the TWMT0 timer.
5. Lock the Watchdog registers and enable the Watchdog Service Data Match Enable function by setting bits 0, 1, 2, 3, and 5 in the TWCFG register.
6. Service the Watchdog by periodically writing the value 5Ch to the WDSDM register at an appropriate rate. Servicing must occur at least once per period programmed into the WDCNT register, but no more than once in a single Watchdog input clock cycle.

Copyright © 2007–2013, Texas Instruments Incorporated

26 MULTI-FUNCTION TIMER

The Multi-Function Timer module contains a pair of 16-bit timer/counters. Each timer/counter unit offers a choice of clock sources for operation and can be configured to operate in any of the following modes:

- Processor-Independent Pulse Width Modulation (PWM) mode, which generates pulses of a specified width and duty cycle, and which also provides a general-purpose timer/counter.
- Dual-Input Capture mode, which measures the elapsed time between occurrences of external events, and which also provides a general-purpose timer/counter.
- Dual Independent Timer mode, which generates system timing signals or counts occurrences of external events.
- Single-Input Capture and Single Timer mode, which provides one external event counter and one system timer.

  The timer unit uses two I/O pins, called TA and TB. The timer I/O pins are alternate functions of the PG7 and PE4 port pins, respectively.

26.1 TIMER STRUCTURE

Figure 26-1 is a block diagram showing the internal structure of the MFT. There are two main functional blocks: a Timer/ Counter and Action block and a Clock Source block. The Timer/Counter and Action block contains two separate timer/counter units, called Timer/Counter 1 and Timer/Counter 2.

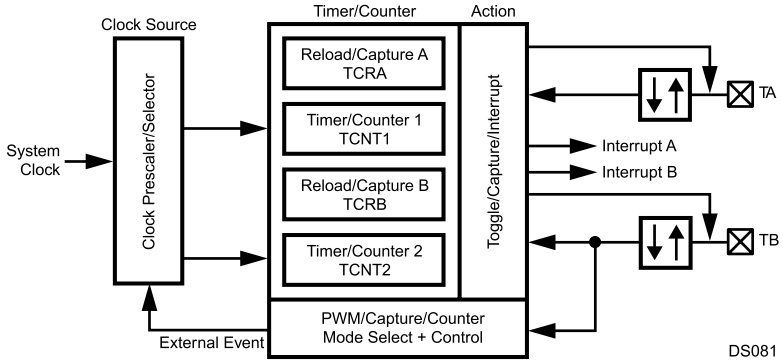

Figure 26-1. Multi-Function Time Block Diagram

26.1.1 Timer/Counter Block

The Timer/Counter block contains the following functional blocks:

- Two 16-bit counters, Timer/Counter 1 (TCNT1) and Timer/Counter 2 (TCNT2)
- Two 16-bit reload/capture registers, TCRA and TCRB
- Control logic necessary to configure the timer to operate in any of the four operating modes
- Interrupt control and I/O control logic

In a power-saving mode that uses the low-frequency (32.768 kHz) clock as the System Clock, the synchronization circuit requires that the Slow Clock operate at no more than one-fourth the speed of the 32.768 kHz System Clock.

Copyright © 2007–2013, Texas Instruments Incorporated

26.1.2 Clock Source Block

The Clock Source block generates the signals used to clock the two timer/counter registers. The internal structure of the Clock Source block is shown in Figure 26-2.

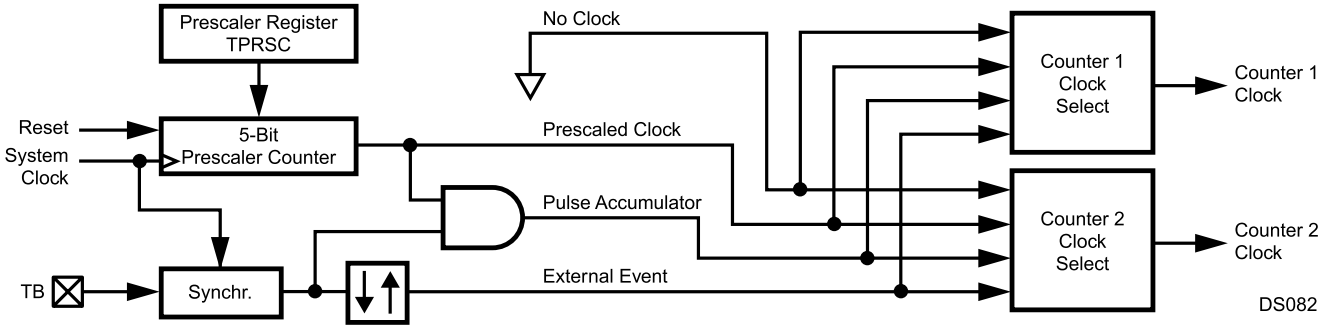

Figure 26-2. Multi-Function Timer Clock Source

Counter Clock Source Select

There are two clock source selectors that allow software to independently select the clock source for each of the two 16-bit counters from any one of the following sources:

- No clock (which stops the counter)
- Prescaled System Clock
- External event count based on TB
- Pulse accumulate mode based on TB
- Slow Clock (derived from the low-frequency oscillator or divided from the high-speed oscillator)

Prescaler

The 5-bit clock prescaler allows software to run the timer with a prescaled clock signal. The prescaler consists of a 5-bit read/write prescaler register (TPRSC) and a 5-bit down counter. The System Clock is divided by the value contained in the prescaler register plus 1. Therefore, the timer clock period can be set to any value from 1 to 32 divisions of the System Clock period. The prescaler register and down counter are both cleared upon reset.

External Event Clock

The TB I/O pin can be configured to operate as an external event input clock for either of the two 16-bit counters. This input can be programmed to detect either rising or falling edges. The minimum pulse width of the external signal is one System Clock cycle. This means that the maximum frequency at which the counter can run in this mode is one-half of the System Clock frequency. This clock source is not available in the capture modes (modes 2 and 4) because the TB pin is used as one of the two capture inputs.

Pulse Accumulate Mode

The counter can also be configured to count prescaler output clock pulses when the TB input is high and not count when the TB input is low, as illustrated in Figure 26-3. The resulting count is an indicator of the cumulative time that the TB input is high. This is called the "pulse-accumulate" mode. In this mode, an AND gate generates a clock signal for the counter whenever a prescaler clock pulse is generated and the TB input is high. (The polarity of the TB signal is programmable, so the counter can count when the TB input is low rather than high.) The pulse-accumulate mode is not available in the capture modes (modes 2 and 4) because the TB pin is used as one of the two capture inputs.

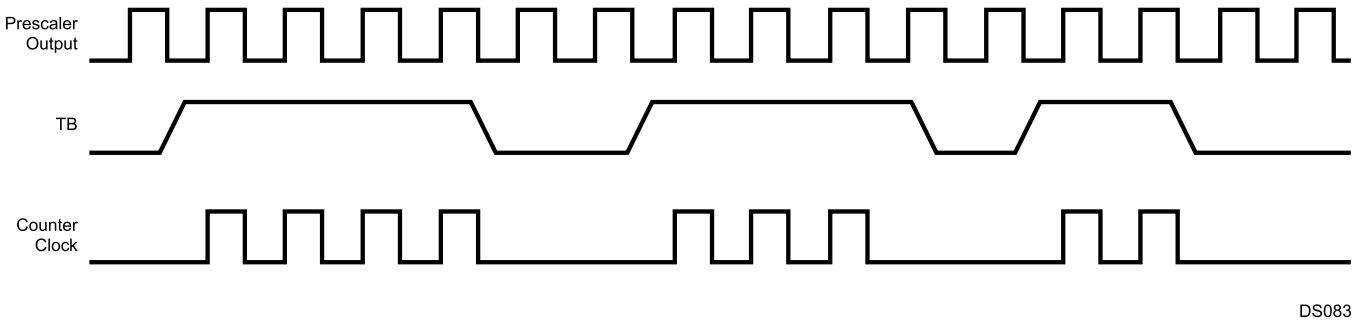

Figure 26-3. Pulse-Accumulate Mode

Slow Clock

The Slow Clock is generated by the Triple Clock and Reset module. The clock source is either the divided fast clock or the external 32.768 kHz crystal oscillator (if available and selected). The Slow Clock can be used as the clock source for the two 16-bit counters. Because the Slow Clock can be asynchronous to the System Clock, a circuit is provided to synchronize the clock signal to the high-frequency System Clock before it is used for clocking the counters. The synchronization circuit requires that the Slow Clock operate at no more than one-fourth the speed of the System Clock.

Limitations in Low-Power Modes

The Power Save mode uses the Slow Clock as the System Clock. In this mode, the Slow Clock cannot be used as a clock source for the timers because that would drive both clocks at the same frequency, and the clock ratio needed for synchronization to the System Clock would not be maintained. However, the External Event Clock and Pulse Accumulate Mode will still work, as long as the external event pulses are at least the size of the whole slow-clock period. Using the prescaled System Clock will also work, but at a much slower rate than the original System Clock.

Idle and Halt modes stop the System Clock (the high-frequency and/or low-frequency clock) completely. If the System Clock is stopped, the timer stops counting until the System Clock resumes operation.

In the Idle or Halt mode, the System Clock stops completely, which stops the operation of the timers. In that case, the timers stop counting until the System Clock resumes operation.

Copyright © 2007–2013, Texas Instruments Incorporated

26.2 TIMER OPERATING MODES

Each timer/counter unit can be configured to operate in any of the following modes:

- Processor-Independent Pulse Width Modulation (PWM) mode
- Dual-Input Capture mode
- Dual Independent Timer mode
- Single-Input Capture and Single Timer mode

At reset, the timers are disabled. To configure and start the timers, software must write a set of values to the registers that control the timers. The registers are described in Section 26.5.

26.2.1 Mode 1: Processor-Independent PWM

Mode 1 is the Processor-Independent Pulse Width Modulation (PWM) mode, which generates pulses of a specified width and duty cycle, and which also provides a separate general-purpose timer/counter.

Figure 26-4 is a block diagram of the Multi-Function Timer configured to operate in Mode 1. Timer/Counter 1 (TCNT1) functions as the time base for the PWM timer. It counts down at the clock rate selected for the counter. When an underflow occurs, the timer register is reloaded alternately from the TCRA and TCRB registers, and counting proceeds downward from the loaded value.

On the first underflow, the timer is loaded from the TCRA register, then from the TCRB register on the next underflow, then from the TCRA register again on the next underflow, and so on. Every time the counter is stopped and restarted, it always obtains its first reload value from the TCRA register. This is true whether the timer is restarted upon reset, after entering Mode 1 from another mode, or after stopping and restarting the clock with the Timer/Counter 1 clock selector.

The timer can be configured to toggle the TA output bit on each underflow. This generates a clock signal on the TA output with the width and duty cycle determined by the values stored in the TCRA and TCRB registers. This is a “processor- independent” PWM clock because once the timer is set up, no more action is required from the CPU to generate a continuous PWM signal.

The timer can be configured to generate separate interrupts upon reload from the TCRA and TCRB registers. The interrupts can be enabled or disabled under software control. The CPU can determine the cause of each interrupt by looking at the TAPND and TBPND bits, which are updated by the hardware on each occurrence of a timer reload.

In Mode 1, Timer/Counter 2 (TCNT2) can be used either as a simple system timer, an external event counter, or a pulse accumulate counter. The clock counts down using the clock selected with the Timer/Counter 2 clock selector. It generates an interrupt upon each underflow if the interrupt is enabled with the TDIEN bit.

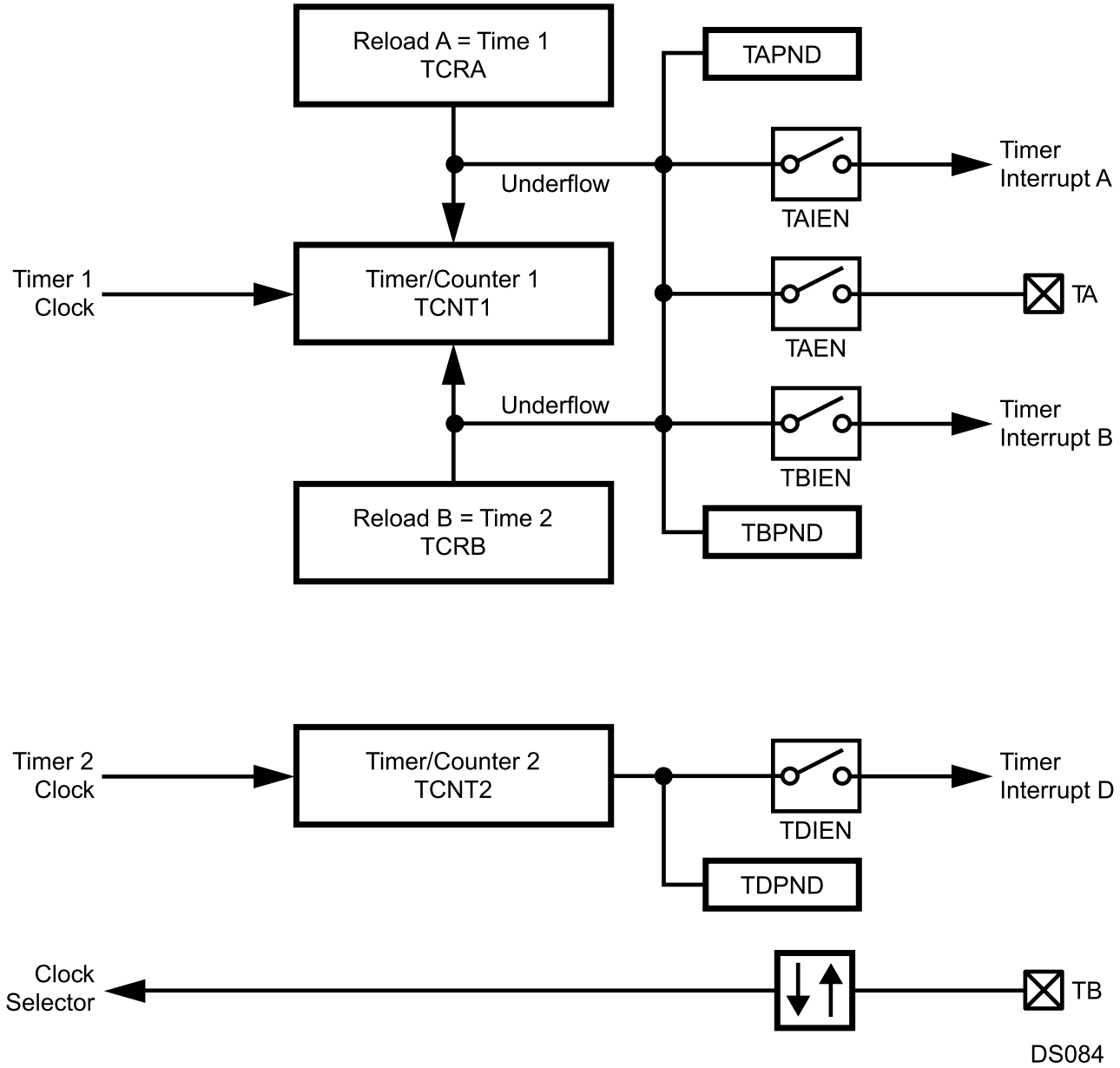

Figure 26-4. Processor-Independent PWM Mode

Copyright © 2007–2013, Texas Instruments Incorporated

26.2.2 Mode 2: Dual Input Capture

Mode 2 is the Dual Input Capture mode, which measures the elapsed time between occurrences of external events, and which also provides a separate general-purpose timer/ counter.

Figure 26-5 is a block diagram of the Multi-Function Timer configured to operate in Mode 2. The time base of the capture timer depends on Timer/Counter 1, which counts down using the clock selected with the Timer/Counter 1 clock selector. The TA and TB pins function as capture inputs. A transition received on the TA pin transfers the timer contents to the TCRA register. Similarly, a transition received on the TB pin transfers the timer contents to the TCRB register. Each input pin can be configured to sense either rising or falling edges.

The TA and TB inputs can be configured to preset the counter to FFFFh on reception of a valid capture event. In this case, the current value of the counter is transferred to the corresponding capture register and then the counter is preset to FFFFh. Using this approach allows software to determine the on-time and off-time and period of an external signal with a minimum of CPU overhead.

The values captured in the TCRA register at different times reflect the elapsed time between transitions on the TA pin. The same is true for the TCRB register and the TB pin. The input signal on the TA or TB pin must have a pulse width equal to or greater than one System Clock cycle.

There are three separate interrupts associated with the capture timer, each with its own enable bit and pending bit. The three interrupt events are reception of a transition on the TA pin, reception of a transition on the TB pin, and underflow of the TCNT1 counter. The enable bits for these events are TAIEN, TBIEN, and TCIEN, respectively.

In Mode 2, Timer/Counter 2 (TCNT2) can be used as a simple system timer. The clock counts down using the clock selected with the Timer/Counter 2 clock selector. It generates an interrupt upon each underflow if the interrupt is enabled with the TDIEN bit.

Neither Timer/Counter 1 (TCNT1) nor Timer/Counter 2 (TCNT2) can be configured to operate as an external event counter or to operate in the pulse-accumulate mode because the TB input is used as a capture input. Attempting to select one of these configurations will cause one or both counters to stop.

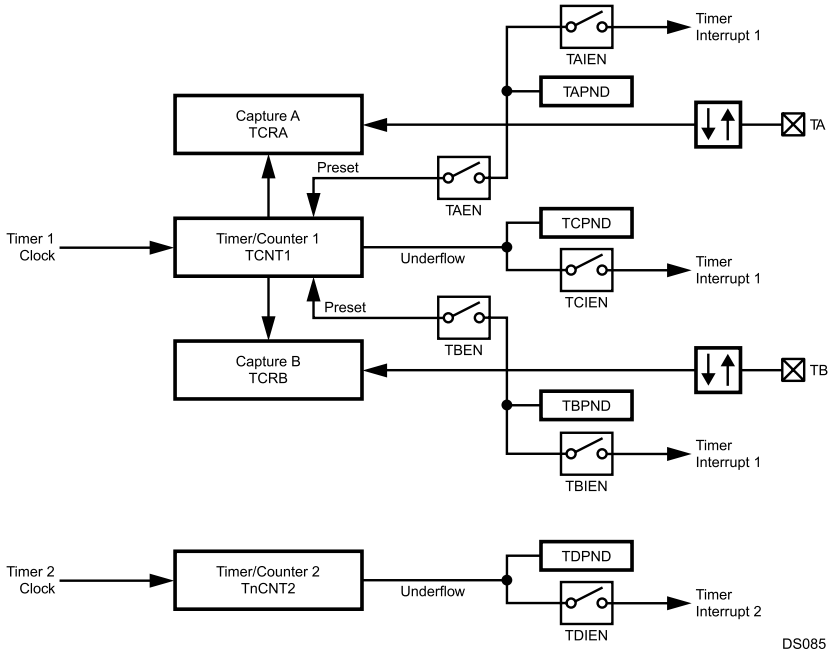

Figure 26-5. Dual-Input Capture Mode

26.2.3 Mode 3: Dual Independent Timer/Counter

Mode 3 is the Dual Independent Timer mode, which generates system timing signals or counts occurrences of external events.

Figure 26-6 is a block diagram of the Multi-Function Timer configured to operate in Mode 3. The timer is configured to operate as a dual independent system timer or dual external event counter. In addition, Timer/Counter 1 can generate a 50% duty cycle PWM signal on the TA pin. The TB pin can be used as an external event input or pulse-accumulate input and can be used as the clock source for either Timer/Counter 1 or Timer/Counter 2. Both counters can also be clocked by the prescaled System Clock.

Timer/Counter 1 (TCNT1) counts down at the rate of the selected clock. On underflow, it is reloaded from the TCRA register and counting proceeds down from the reloaded value. In addition, the TA pin is toggled on each underflow if this function is enabled by the TAEN bit. The initial state of the TA pin is software-programmable. When the TA pin is toggled from low to high, it sets the TCPND interrupt pending bit and also generates an interrupt if enabled by the TAIEN bit.

Because the TA pin toggles on every underflow, a 50% duty cycle PWM signal can be generated on the TA pin without any further action from the CPU.

Timer/Counter 2 (TCNT2) counts down at the rate of the selected clock. On underflow, it is reloaded from the TCRB register and counting proceeds down from the reloaded value. In addition, each underflow sets the TDPND interrupt pending bit and generates an interrupt if the interrupt is enabled by the TDIEN bit.

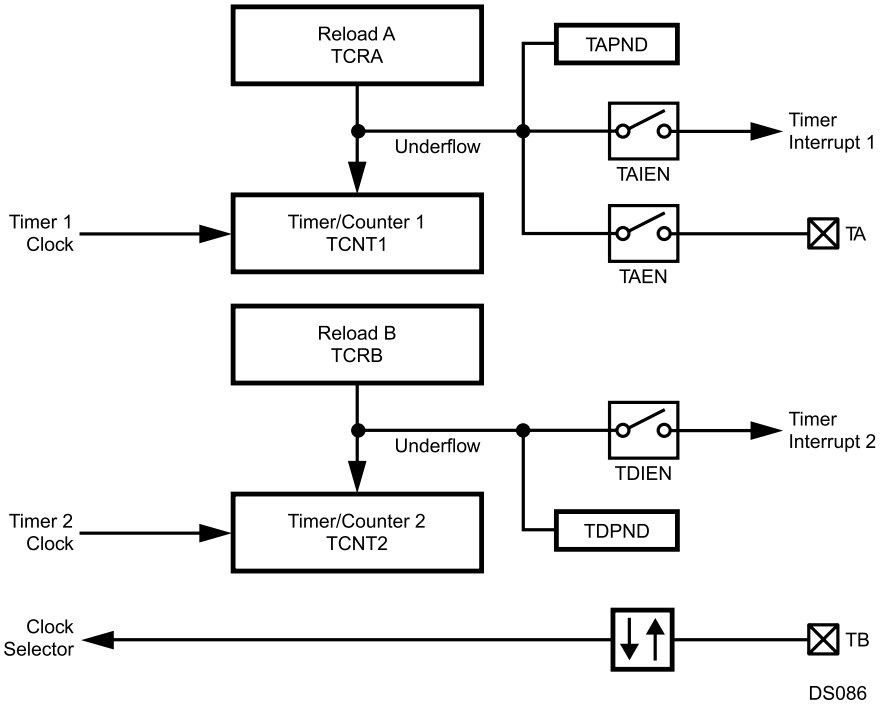

Figure 26-6. Dual-Independent Timer/Counter Mode

Copyright © 2007–2013, Texas Instruments Incorporated

26.2.4 Mode 4: Input Capture Plus Timer

Mode 4 is the Single Input Capture and Single Timer mode, which provides one external event counter and one system timer.

Figure 26-7 is a block diagram of the Multi-Function Timer configured to operate in Mode 4. This mode offers a combination of Mode 3 and Mode 2 functions. Timer/Counter 1 is used as a system timer as in Mode 3 and Timer/Counter 2 is used as a capture timer as in Mode 2, but with a single input rather than two inputs.

Timer/Counter 1 (TCNT1) operates the same as in Mode 3. It counts down at the rate of the selected clock. On underflow, it is reloaded from the TCRA register and counting proceeds down from the reloaded value. The TA pin is toggled on each underflow, when this function is enabled by the TAEN bit. When the TA pin is toggled from low to high, it sets the TCPND interrupt pending bit and also generates an interrupt if the interrupt is enabled by the TAIEN bit. A 50% duty cycle PWM signal can be generated on TA without any further action from the CPU.

Timer/Counter 2 (TCNT1) counts down at the rate of the selected clock. The TB pin functions as the capture input. A transition received on TB transfers the timer contents to the TCRB register. The input pin can be configured to sense either rising or falling edges.

The TB input can be configured to preset the counter to FFFFh on reception of a valid capture event. In this case, the current value of the counter is transferred to the capture register and then the counter is preset to FFFFh.

The values captured in the TCRB register at different times reflect the elapsed time between transitions on the TA pin. The input signal on TB must have a pulse width equal to or greater than one System Clock cycle.

There are two separate interrupts associated with the capture timer, each with its own enable bit and pending bit. The two interrupt events are reception of a transition on TB and underflow of the TCNT2 counter. The enable bits for these events are TBIEN and TDIEN, respectively.

Neither Timer/Counter 1 (TCNT1) nor Timer/Counter 2 (TCNT2) can be configured to operate as an external event counter or to operate in the pulse-accumulate mode because the TB input is used as a capture input. Attempting to select one of these configurations will cause one or both counters to stop. In this mode, Timer/Counter 2 must be enabled at all times.

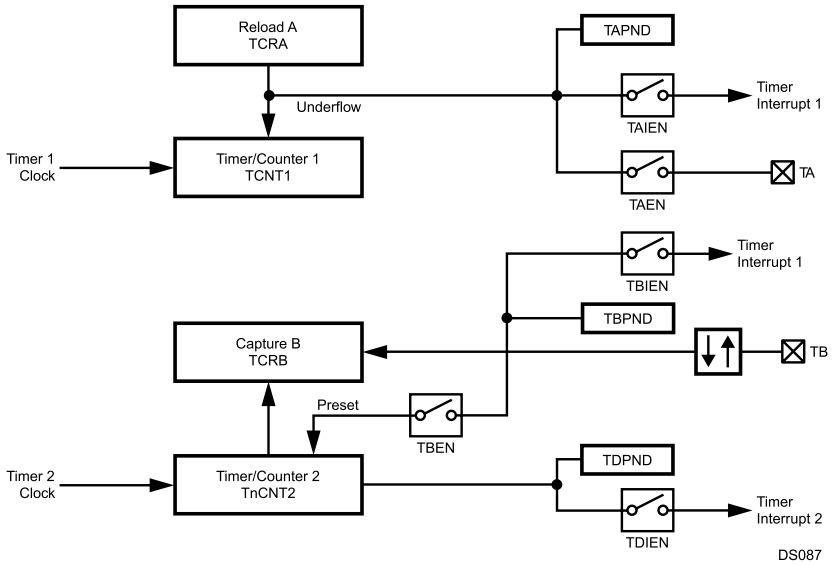

Figure 26-7. Input Capture Plus Timer Mode

26.3 TIMER INTERRUPTS

The Multi-Function Timer unit has four interrupt sources, designated A, B, C, and D. Interrupt sources A, B, and C are mapped into a single system interrupt called Timer Interrupt 1, while interrupt source D is mapped into a system interrupt called Timer Interrupt 2. Each of the four interrupt sources has its own enable bit and pending bit. The enable bits are named TAIEN, TBIEN, TCIEN, and TDIEN. The pending bits are named TAPND, TBPND, TCPND, and TDPND.

Timer Interrupts 1 and 2 are system interrupts TA and TB (IRQ14 and IRQ13), respectively.

Table 26-1 shows the events that trigger interrupts A, B, C, and D in each of the four operating modes. Note that some interrupt sources are not used in some operating modes.

26.4 TIMER I/O FUNCTIONS

The Multi-Function Timer unit uses two I/O pins, called TA and TB. The function of each pin depends on the timer operating mode and the TAEN and TBEN enable bits. Table 26-2 shows the functions of the pins in each operating mode, and for each combination of enable bit settings.

When the TA pin is configured to operate as a PWM output (TAEN = 1), the state of the pin is toggled on each underflow of the TCNT1 counter. In this case, the initial value on the pin is determined by the TAOUT bit. For example, to start with TA high, software must set the TAOUT bit before enabling the timer clock. This option is available only when the timer is configured to operate in Mode 1, 3, or 4 (in other words, when TCRA is not used in Capture mode).

Table 26-1. Timer Interrupts Overview

Sys. Int.	Interrupt Pending Bit	Mode 1	Mode 2	Mode 3	Mode 4
		PWM + Counter	Dual Input Capture + Counter	Dual Counter	Single Capture + Counter
Timer Int. 1 (TA Int.)	TAPND	TCNT1 reload fromTCRA	Input capture on TA transition	TCNT1 reload from TCRA	TCNT1 reload from TCRA
	TBPND	TCNT1 reload fromTCRB	Input Capture on TB transition	N/A	Input Capture on TB transition
	TCPND	N/A	TCNT1 underflow	N/A	N/A
Timer Int. 2 (TB Int.)	TDPND	TCNT2 underflow	TCNT2 underflow	TCNT2 reload from TCRB	TCNT2 underflow

Table 26-2. Timer I/O Functions

I/O	TAEN TBEN	Mode 1	Mode 2	Mode 3	Mode 4
		PWM + Counter	Dual Input Capture +counter	Dual Counter	Single Capture +counter
TA	TAEN = 0 TBEN = X	No Output	Capture TCNT1 into TCRA	No Output Toggle	No Output Toggle
	TAEN = 1 TBEN = X	Toggle Output on Underflow of TCNT1	Capture TCNT1 into TCRA and Preset TCNT1	Toggle Output on Underflow of TCNT1	Toggle Output on Underflow of TCNT1
TB	TAEN = X TBEN = 0	Ext. Event or Pulse Accumulate Input	Capture TCNT1 into TCRB	Ext. Event or Pulse Accumulate Input	Capture TCNT2 into TCRB
	TAEN = X TBEN = 1	Ext. Event or Pulse Accumulate Input	Capture TCNT1 into TCRB and Preset TCNT1	Ext. Event or Pulse Accumulate Input	Capture TCNT2 into TCRB and Preset TCNT2

Copyright © 2007–2013, Texas Instruments Incorporated

26.5 TIMER REGISTERS

Table 26-3 lists the CPU-accessible registers used to control the Multi-Function Timers.

Table 26-3. Multi-Function Timer Registers

Name	Address	Description
TPRSC	FF FF48h	Clock Prescaler Register
TCKC	FF FF4Ah	Clock Unit Control Register
TCNT	FF FF40h	Timer/Counter 1Register
TCNT2	FF FF46h	Timer/Counter 2Register
TCRA	FF FF42h	Reload/Capture A Register
TCRB	FF FF44h	Reload/Capture B Register
TCTRL	FF FF4Ch	Timer Mode Control Register
TICTL	FF FF4Eh	Timer Interrupt Control Register
TICLR	FF FF50h	Timer Interrupt Clear Register

26.5.1 Clock Prescaler Register (TPRSC)

The TPRSC register is a byte-wide, read/write register that holds the current value of the 5-bit clock prescaler (CLKPS). This register is cleared on reset. The register format is shown below.

7 – 5	4 – 0
Reserved	CLKPS

CLKPS The Clock Prescaler field specifies the divisor used to generate the Timer Clock from the System Clock. When the timer is configured to use the prescaled clock, the System Clock is divided by (CLKPS + 1) to produce the timer clock. Therefore, the System Clock divisor can range from 1 to 32.

26.5.2 Clock Unit Control Register (TCKC)

The TCKC register is a byte-wide, read/write register that selects the clock source for each timer/counter. Selecting the clock source also starts the counter. This register is cleared on reset, which disables the timer/counters. The register format is shown below.

7 – 6	5 – 3	2 – 0
Reserved	C2CSEL	C1CSEL

C1CSEL The Counter 1 Clock Select field specifies the clock mode for Timer/Counter 1 as follows:
000 – No clock (Timer/Counter 1 stopped, modes 1, 2, and 3 only).
001 – Prescaled System Clock.
010 – External event on TB (modes 1 and 3 only).
011 – Pulse-accumulate mode based on TB (modes 1 and 3 only).
100 – Slow Clock.*
101 – Reserved.
110 – Reserved.
111 – Reserved.

C2CSEL The Counter 2 Clock Select field specifies the clock mode for Timer/Counter 2 as follows:
000 – No clock (Timer/Counter 2 stopped, modes 1, 2, and 3 only).
001 – Prescaled System Clock.
010 – External event on TB (modes 1 and 3 only).
011 – Pulse-accumulate mode based on TB (modes 1 and 3 only).
100 – Slow Clock*
101 – Reserved.
110 – Reserved.
111 – Reserved.

26.5.3 Timer/Counter 1 Register (TCNT1)

The TCNT1 register is a word-wide, read/write register that holds the current count value for Timer/Counter 1. The register contents are not affected by a reset and are unknown after power-up.

15 – 0
TCNT1

26.5.4 Timer/Counter 2 Register (TCNT2)

The TCNT2 register is a word-wide, read/write register that holds the current count value for Timer/Counter 2. The register contents are not affected by a reset and are unknown after power-up.

15 – 0
TCNT2

26.5.5 Reload/Capture A Register (TCRA)

The TCRA register is a word-wide, read/write register that holds the reload or capture value for Timer/Counter 1. The register contents are not affected by a reset and are unknown after power-up.

15 – 0
TCRA

Copyright © 2007–2013, Texas Instruments Incorporated

26.5.6 Reload/Capture B Register (TCRB)

The TCRB register is a word-wide, read/write register that holds the reload or capture value for Timer/Counter 2. The register contents are not affected by a reset and are unknown after power-up.

15							0
TCRB							

26.5.7 Timer Mode Control Register (TCTRL)

The TCTRL register is a byte-wide, read/write register that sets the operating mode of the timer/counter and the TA and TB pins. This register is cleared at reset. The register format is shown below.

7	6	5	4	3	2	1	0
TEN	TAOUT	TBEN	TAEN	TBEDG	TAEDG	MDSEL	

MDSEL — The Mode Select field sets the operating mode of the timer/counter as follows:
00 – Mode 1: PWM plus system timer.
01 – Mode 2: Dual-Input Capture plus system timer.
10 – Mode 3: Dual Timer/Counter.
11 – Mode 4: Single-Input Capture and Single Timer.

TAEDG — The TA Edge Polarity bit selects the polarity of the edges that trigger the TA input.
0 – TA input is sensitive to falling edges (high to low transitions).
1 – TA input is sensitive to rising edges (low to high transitions).

TBEDG — The TB Edge Polarity bit selects the polarity of the edges that trigger the TB input. In pulse- accumulate mode, when this bit is set, the counter is enabled only when TB is high; when this bit is clear, the counter is enabled only when TB is low.
0 – TB input is sensitive to falling edges (high to low transitions).
1 – TB input is sensitive to rising edges (low to high transitions).

TAEN — The TA Enable bit controls whether the TA pin is enabled to operate as a preset input or as a PWM output, depending on the timer operating mode. In Mode 2 (Dual Input Capture), a transition on the TA pin presets the TCNT1 counter to FFFFh. In the other modes, TA functions as a PWM output. When this bit is clear, operation of the pin for the timer/counter is disabled.
0 – TA input disabled.
1 – TA input enabled.

TBEN — The TB Enable bit controls whether the TB pin in enabled to operate in Mode 2 (Dual Input Capture) or Mode 4 (Single Input Capture and Single Timer). A transition on the TB pin pre- sets the corresponding timer/counter to FFFFh (TCNT1 in Mode 2 or TCNT2 in Mode 4). When this bit is clear, operation of the pin for the timer/counter is disabled. This bit setting has no effect in Mode 1 or Mode 3.
0 – TB input disabled.
1 – TB input enabled.

TAOUT — The TA Output Data bit indicates the current state of the TA pin when the pin is used as a PWM output. The hardware sets and clears this bit, but software can also read or write this bit at any time and therefore control the state of the output pin. In case of conflict, a software write has precedence over a hardware update. This bit setting has no effect when the TA pin is used as an input.
0 – TA pin is low.
1 – TA pin is high.

TEN — The Timer Enable bit controls whether the Multi-Function Timer is enabled. When the module is disabled all clocks to the counter unit are stopped to minimize power consumption. For that reason, the timer/counter registers (TCNT1 and TCNT2), the capture/reload registers (TCRA and TCRB), and the interrupt pending bits (TXPND) cannot be written in this mode. Also, the 5-bit clock prescaler and the interrupt pending bits are cleared, and the TA I/O pin becomes an input.
0 – Multi-Function Timer is disabled.
1 – Multi-Function Timer is enabled.

26.5.8 Timer Interrupt Control Register (TICTL)

The TICTL register is a byte-wide, read/write register that contains the interrupt enable bits and interrupt pending bits for the four timer interrupt sources, designated A, B, C, and D. The condition that causes each type of interrupt depends on the operating mode, as shown in Table 26-1.

This register is cleared upon reset. The register format is shown below.

7	6	5	4	3	2	1	0
TDIEN	TCIEN	TBIEN	TAIEN	TDPND	TCPND	TBPND	TAPND

TAPND he Timer Interrupt Source A Pending bit indicates that timer interrupt condition A has occurred. For an explanation of interrupt conditions A, B, C, and D, see Table 26-1. This bit can be set by hardware or by software. To clear this bit, software must use the Timer Interrupt Clear Register (TICLR). Attempting to directly write a 0 to this bit is ignored.
0 – Interrupt source A has not triggered.
1 – Interrupt source A has triggered.

TBPND The Timer Interrupt Source B Pending bit indicates that timer interrupt condition B has occurred. For an explanation of interrupt conditions A, B, C, and D, see Table 26-1. This bit can be set by hardware or by software. To clear this bit, software must use the Timer Interrupt Clear Register (TICLR). Attempting to directly write a 0 to this bit is ignored.
0 – Interrupt source B has not triggered.
1 – Interrupt source B has triggered.

TCPND The Timer Interrupt Source C Pending bit indicates that timer interrupt condition C has occurred. For an explanation of interrupt conditions A, B, C, and D, see Table 26-1. This bit can be set by hardware or by software. To clear this bit, software must use the Timer Interrupt Clear Register (TICLR). Attempting to directly write a 0 to this bit is ignored.
0 – Interrupt source C has not triggered.
1 – Interrupt source C has triggered.

TDPND The Timer Interrupt Source D Pending bit indicates that timer interrupt condition D has occurred. For an explanation of interrupt conditions A, B, C, and D, see Table 26-1. This bit can be set by hardware or by software. To clear this bit, software must use the Timer Interrupt Clear Register (TICLR). Attempting to directly write a 0 to this bit is ignored.
0 – Interrupt source D has not triggered.
1 – Interrupt source D has triggered.

TAIEN The Timer Interrupt A Enable bit controls whether an interrupt is generated on each occurrence of interrupt condition A. For an explanation of interrupt conditions A, B, C, and D, see Table 26-1.
0 – Condition A interrupts disabled.
1 – Condition A interrupts enabled.

TBIEN The Timer Interrupt B Enable bit controls whether an interrupt is generated on each occurrence of interrupt condition B. For an explanation of interrupt conditions A, B, C, and D, see Table 26-1.
0 – Condition B interrupts disabled.
1 – Condition B interrupts enabled.

TCIEN The Timer Interrupt B Enable bit controls whether an interrupt is generated on each occurrence of interrupt condition B. For an explanation of interrupt conditions A, B, C, and D, see Table 26-1.
0 – Condition B interrupts disabled.
1 – Condition B interrupts enabled.

TDIEN The Timer Interrupt D Enable bit controls whether an interrupt is generated on each oc- currence of interrupt condition D. For an explanation of interrupt conditions A, B, C, and D, see Table 26-1.
0 – Condition D interrupts disabled.
1 – Condition D interrupts enabled.

Copyright © 2007–2013, Texas Instruments Incorporated

26.5.9 Timer Interrupt Clear Register (TICLR)

The TICLR register is a byte-wide, write-only register that al- lows software to clear the TAPND, TBPND, TCPND, and TDPND bits in the Timer Interrupt Control (TICTRL) register. Do not modify this register with instructions that access the register as a read-modify-write operand, such as the bit manipulation instructions. The register reads as FFh. The register format is shown below.

7 – 4	3	2	1	0
Reserved	TDCLR	TCCLR	TBCLR	TACLR

TACLR — The Timer Pending A Clear bit is used to clear the Timer Interrupt Source A Pending bit (TAPND) in the Timer Interrupt Control register (TICTL).
0 – Writing a 0 has no effect.
1 – Writing a 1 clears the TAPND bit.

TBCLR — The Timer Pending A Clear bit is used to clear the Timer Interrupt Source B Pending bit (TBPND) in the Timer Interrupt Control register (TICTL).
0 – Writing a 0 has no effect.
1 – Writing a 1 clears the TBPND bit.

TCCLR — The Timer Pending C Clear bit is used to clear the Timer Interrupt Source C Pending bit (TCPND) in the Timer Interrupt Control register (TICTL).
0 – Writing a 0 has no effect.
1 – Writing a 1 clears the TCPND bit.

TDCLR — TDCLR The Timer Pending D Clear bit is used to clear the Timer Interrupt Source D Pending bit (TDPND) in the Timer Interrupt Control register (TICTL).
0 – Writing a 0 has no effect.
1 – Writing a 1 clears the TDPND bit.

27 VERSATILE TIMER UNIT (VTU)

The Versatile Timer Unit (VTU) contains four fully independent 16-bit timer subsystems. Each timer subsystem can operate either as dual 8-bit PWM timers, as a single 16-bit PWM timer, or as a 16-bit counter with 2 input capture channels. These timer subsystems offers an 8-bit clock prescaler to accommodate a wide range of system frequencies.

The VTU offers the following features:

- The VTU can be configured to provide:
  - Eight fully independent 8-bit PWM channels
  - Four fully independent 16-bit PWM channels
  - Eight 16-bit input capture channels
- The VTU consists of four timer subsystems, each of which contains:
  - A 16-bit counter
  - Two 16-bit capture / compare registers
  - An 8-bit fully programmable clock prescaler
- Each of the four timer subsystems can operate in the following modes:
  - Low power mode, meaning all clocks are stopped
  - Dual 8-bit PWM mode
  - 16-bit PWM mode
  - Dual 16-bit input capture mode
- The VTU controls a total of eight I/O pins, each of which can function as either:
  - PWM output with programmable output polarity
  - Capture input with programmable event detection and timer reset
- A flexible interrupt scheme with
  - Four separate system level interrupt requests
  - A total of 16 interrupt sources each with a separate interrupt pending bit and interrupt enable bit

Copyright © 2007–2013, Texas Instruments Incorporated

27.1 VTU FUNCTIONAL DESCRIPTION

The VTU is comprised of four timer subsystems. Each timer subsystem contains an 8-bit clock prescaler, a 16-bit up-counter, and two 16-bit registers. Each timer subsystem controls two I/O pins which either function as PWM outputs or capture inputs depending on the mode of operation. There are four system-level interrupt requests, one for each timer subsystem. Each system-level interrupt request is controlled by four interrupt pending bits with associated en- able/disable bits. All four timer subsystems are fully independent, and each may operate as a dual 8-bit PWM timer, a 16-bit PWM timer, or as a dual 16-bit capture timer. Figure 27-1 shows the main elements of the VTU.

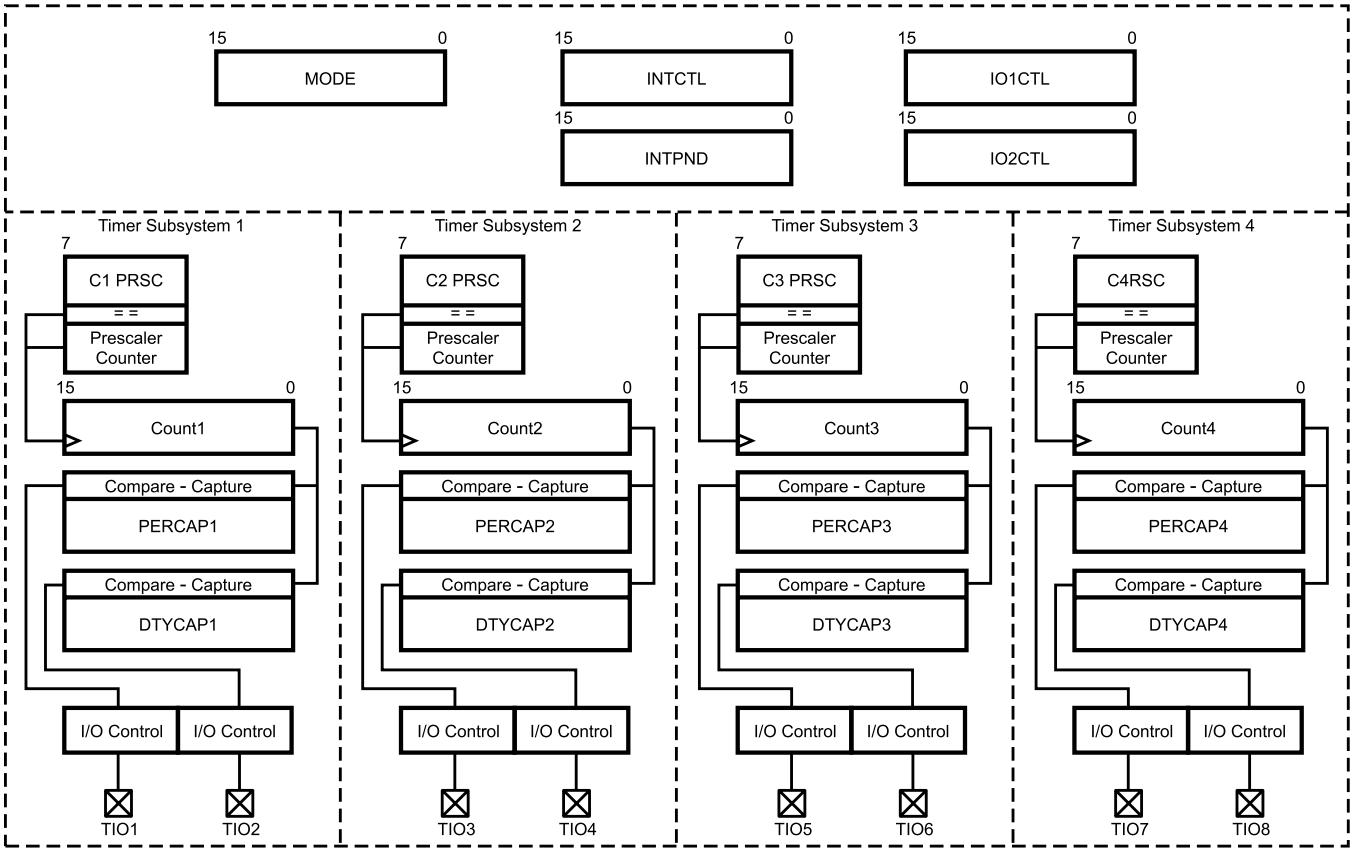

Figure 27-1. Versatile Timer Unit Block Diagram

27.1.1 Dual 8-bit PWM Mode

Each timer subsystem may be configured to generate two fully independent PWM waveforms on the respective TIOx pins. In this mode, the counter COUNTx is split and operates as two independent 8-bit counters. Each counter increments at the rate determined by the clock prescaler.

Each of the two 8-bit counters may be started and stopped separately using the corresponding TxRUN bits. Once either of the two 8-bit timers is running, the clock prescaler starts counting. Once the clock prescaler counter value matches the value of the associated CxPRSC register field, COUNTx is incremented.

The period of the PWM output waveform is determined by the value of the PERCAPx register. The TIOx output starts at the default value as programmed in the IOxCTL.PxPOL bit. Once the counter value reaches the value of the period register PERCAPx, the counter is cleared on the next counter increment. On the following increment from 00h to 01h, the TIOx output will change to the opposite of the default value.

The duty cycle of the PWM output waveform is controlled by the DTYCAPx register value. Once the counter value reaches the value of the duty cycle register DTYCAPx, the PWM output TIOx changes back to its default value on the next counter increment. Figure 27-2 illustrates this concept.

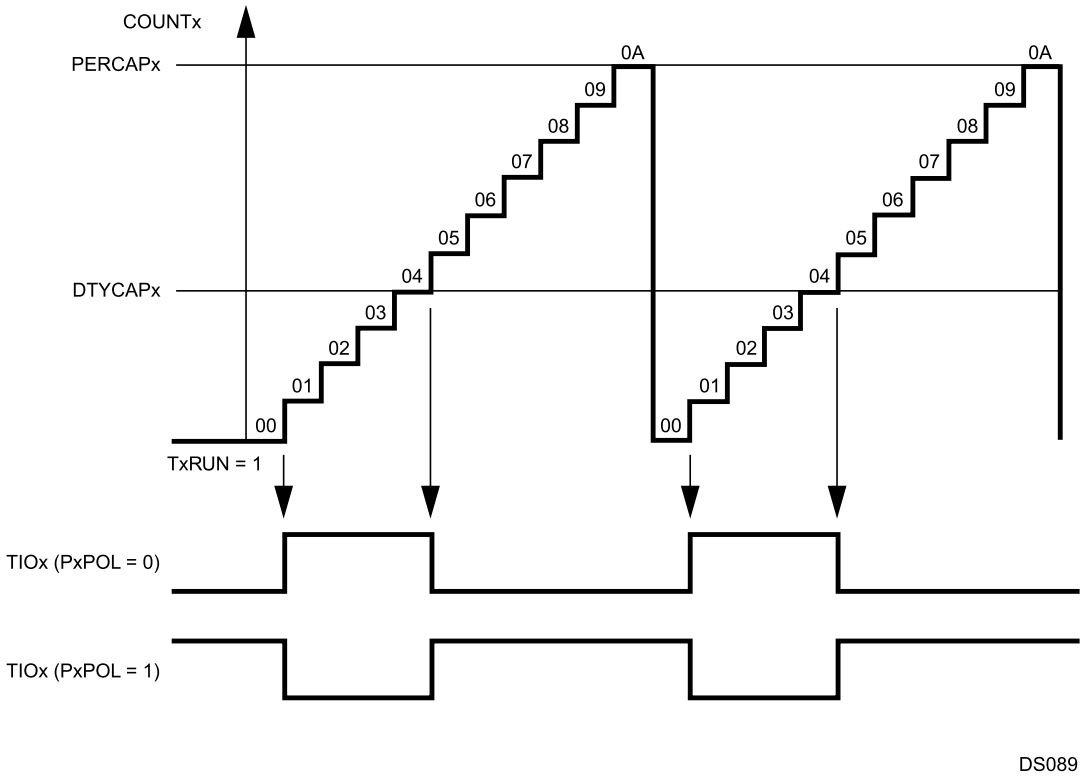

Figure 27-2. VTU PWM Generation

The period time is determined by the following formula:

$$\text{PWM Period} = (\text{PERCAPx} + 1) \times (\text{CxPRSC} + 1) \times T_{CLK} \quad (35)$$

The duty cycle in percent is calculated as follows:

$$\text{Duty Cycle} = (\text{DTYCAPx} / (\text{PERCAPx} + 1)) \times 100 \quad (36)$$

Copyright © 2007–2013, Texas Instruments Incorporated

If the duty cycle register (DTYCAPx) holds a value which is greater than the value held in the period register (PER- CAPx) the TIOx output will remain at the opposite of its default value which corresponds to a duty cycle of 100%. If the duty cycle register (DTYCAPx) register holds a value of 00h, the TIOx output will remain at the default value which corresponds to a duty cycle of 0%, in which case the value in the PERCAPx register is irrelevant. This scheme allows the duty cycle to be programmed in a range from 0% to 100%.

In order to allow fully synchronized updates of the period and duty cycle compare values, the PERCAPx and DTY- CAPx registers are double buffered when operating in PWM mode. Therefore, if software writes to either the period or duty cycle register while either of the two PWM channels is enabled, the new value will not take effect until the counter value matches the previous period value or the timer is stopped.

Reading the PERCAPx or DTYCAPx register will always re- turn the most recent value written to it.

The counter registers can be written if both 8-bit counters are stopped. This allows software to preset the counters before starting, which can be used to generate PWM output waveforms with a phase shift relative to each other. If the counter is written with a value other than 00h, it will start incrementing from that value. The TIOx output will remain at its default value until the first 00h to 01h transition of the counter value occurs. If the counter is preset to values which are less than or equal to the value held in the period register (PERCAPx) the counter will count up until a match between the counter value and the PERCAPx register value occurs. The counter will then be cleared and continue counting up. Alternatively, the counter may be written with a value which is greater than the value held in the period register. In that case the counter will count up to FFh, then roll over to 00h. In any case, the TIOx pin always changes its state at the 00h to 01h transition of the counter.

Software may only write to the COUNTx register if both TxRUN bits of a timer subsystem are clear. Any writes to the counter register while either timer is running will be ignored.

The two I/O pins associated with a timer subsystem function as independent PWM outputs in the dual 8-bit PWM mode. If a PWM timer is stopped using its associated MODE.TxRUN bit the following actions result:

- The associated TIOx pin will return to its default value as defined by the IOxCTL.PxPOL bit.
- The counter will stop and will retain its last value.
- Any pending updates of the PERCAPx and DTYCAPx register will be completed.
- The prescaler counter will be stopped and reset if both MODE.TxRUN bits are cleared.

Figure 27-3 illustrates the configuration of a timer subsystem while operating in dual 8-bit PWM mode. The numbering in Figure 27-3 refers to timer subsystem 1 but equally applies to the other three timer subsystems.

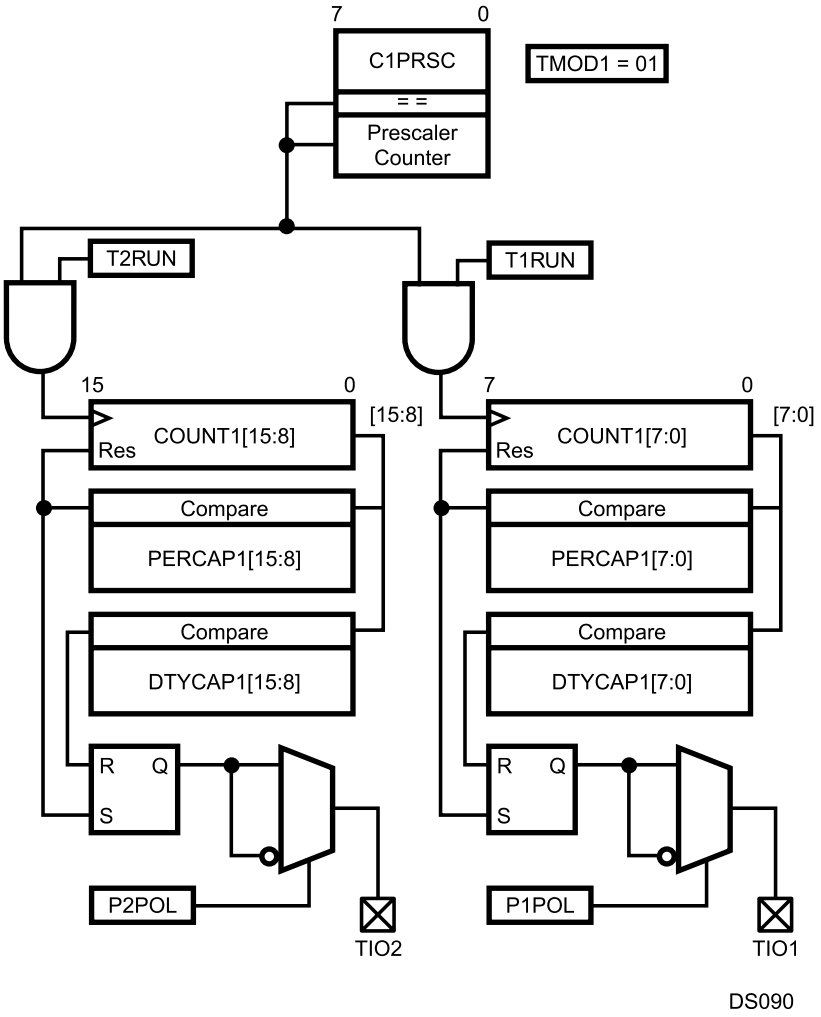

Figure 27-3. VTU Dual 8-Bit PWM Mode

Copyright © 2007–2013, Texas Instruments Incorporated

27.1.2 16-Bit PWM Mode

Each of the four timer subsystems may be independently configured to provide a single 16-bit PWM channel. In this case the lower and upper bytes of the counter are concatenated to form a single 16-bit counter.

Operation in 16-bit PWM mode is conceptually identical to the dual 8-bit PWM operation as outlined under Dual 8-bit PWM Mode. The 16-bit timer may be started or stopped with the lower MODE.TxRUN bit, i.e. T1RUN for timer subsystem 1.

The two TIOx outputs associated with a timer subsystem can be used to produce either two identical PWM waveforms or two PWM waveforms of opposite polarities. This can be accomplished by setting the two PxPOL bits of the respective timer subsystem to either identical or opposite values.

Figure 27-4 illustrates the configuration of a timer subsystem while operating in 16-bit PWM mode. The numbering in Figure 27-4 refers to timer subsystem 1 but equally applies to the other three timer subsystems.

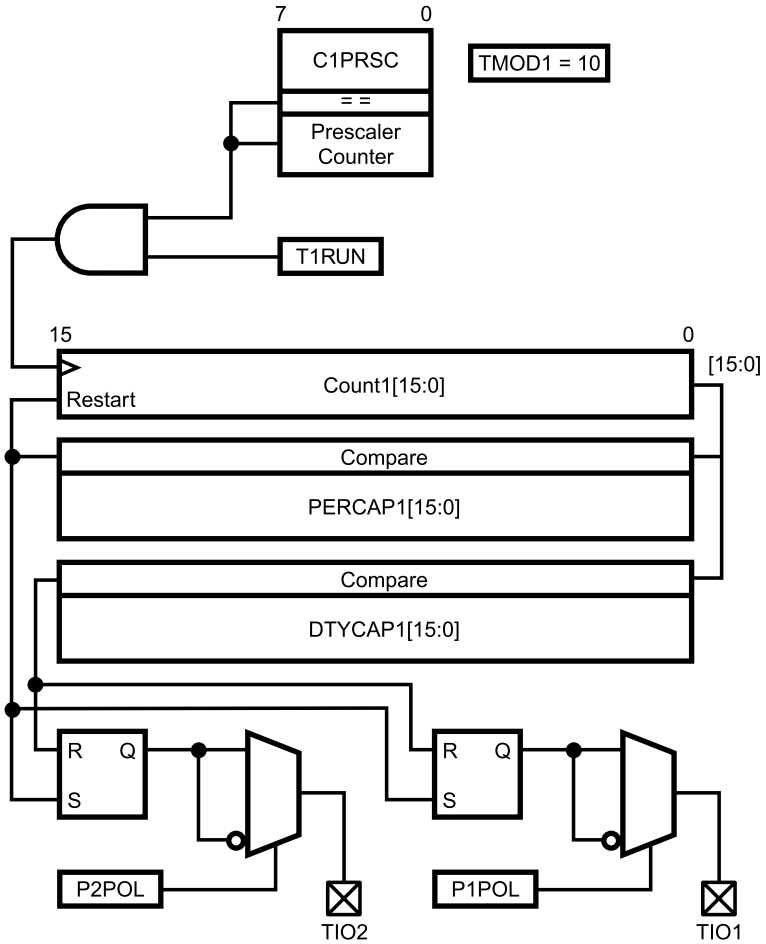

Figure 27-4. VTU 16-bit PWM Mode

27.1.3 Dual 16-Bit Capture Mode

In addition to the two PWM modes, each timer subsystem may be configured to operate in an input capture mode which provides two 16-bit capture channels. The input capture mode can be used to precisely measure the period and duty cycle of external signals.

In capture mode the counter COUNTx operates as a 16-bit up-counter while the two TIOx pins associated with a timer subsystem operate as capture inputs. A capture event on the TIOx pins causes the contents of the counter register (COUNTx) to be copied to the PERCAPx or DTYCAPx registers respectively.

Starting the counter is identical to the 16-bit PWM mode, i.e. setting the lower of the two MODE.TxRUN bits will start the counter and the clock prescaler. In addition, the capture event inputs are enabled once the MODE.TxRUN bit is set.

The TIOx capture inputs can be independently configured to detect a capture event on either a positive transition, a negative transition or both a positive and a negative transition. In addition, any capture event may be used to reset the counter COUNTx and the clock prescaler counter. This avoids the need for software to keep track of timer overflow conditions and greatly simplifies the direct frequency and duty cycle measurement of an external signal.

Figure 27-5 illustrates the configuration of a timer subsystem while operating in capture mode. The numbering in Figure 27-5 refers to timer subsystem 1 but equally applies to the other three timer subsystems.

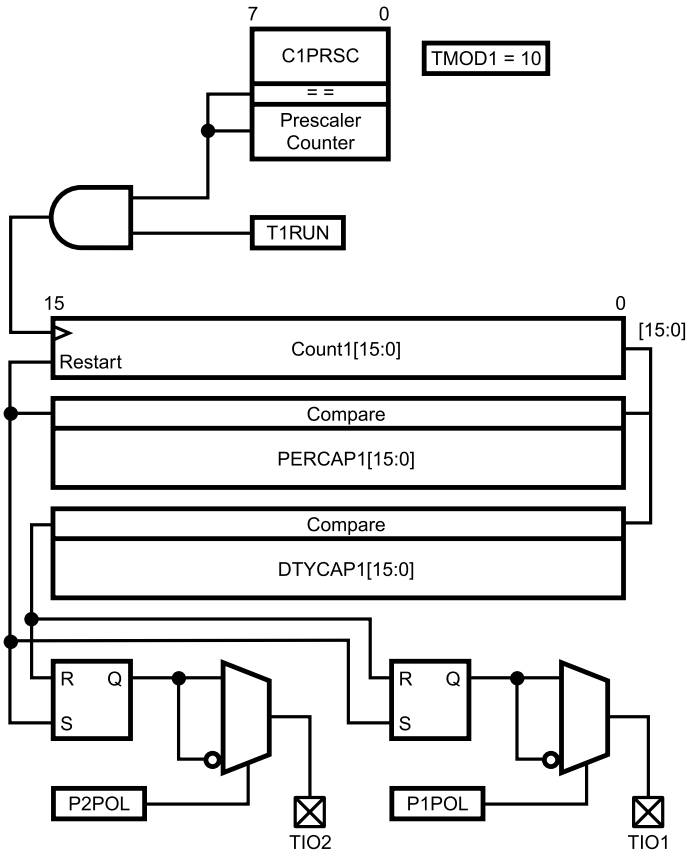

Figure 27-5. VTU Dual 16-bit Capture Mode

Copyright © 2007–2013, Texas Instruments Incorporated

27.1.4 Low Power Mode

In case a timer subsystem is not used, software can place it in a low-power mode. All clocks to a timer subsystem are stopped and the counter and prescaler contents are frozen once low-power mode is entered. Software may continue to write to the MODE, INTCTL, IOxCTL, and CLKxPS registers. Write operations to the INTPND register are allowed; but if a timer subsystem is in low-power mode, its associated interrupt pending bits cannot be cleared. Software cannot write to the COUNTx, PERCAPx, and DTYCAPx registers of a timer subsystem while it is in low-power mode. All registers can be read at any time.

27.1.5 Interrupts

The VTU has a total of 16 interrupt sources, four for each of the four timer subsystems. All interrupt sources have a pending bit and an enable bit associated with them. All interrupt pending bits are denoted IxAPD through IxDPD where "x" relates to the specific timer subsystem. There is one system level interrupt request for each of the four timer subsystems.

Figure 27-6 illustrates the interrupt structure of the versatile timer module

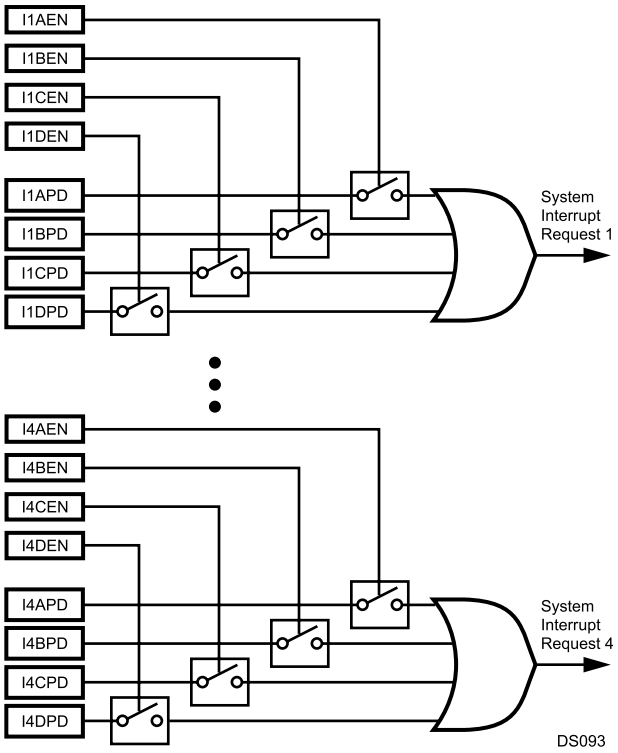

Figure 27-6. VTU Interrupt Request Structure

Each of the timer pending bits - IxAPD through IxDPD - is set by a specific hardware event depending on the mode of operation, i.e., PWM or Capture mode. Table 27-1 outlines the specific hardware events relative to the operation mode which cause an interrupt pending bit to be set.

27.1.6 ISE Mode operation

The VTU supports breakpoint operation of the In-System- Emulator (ISE). If FREEZE is asserted, all timer counter clocks will be inhibited and the current value of the timer registers will be frozen; in capture mode, all further capture events are disabled. Once FREEZE becomes inactive, counting will resume from the previous value and the capture input events are re-enabled.

Table 27-1. VTU Interrupt Sources

Pending Flag	Dual 8-bit PWM Mode	16-bit PWM Mode	Capture Mode
IxAPD	Low Byte Duty Cycle match	Duty Cycle match	Capture to PERCAPx
IxBPD	Low Byte Period match	Period match	Capture to DTYCAPx
IxCPD	High Byte Duty Cycle match	N/A	Counter Overflow
IxDPD	High Byte Period match	N/A	N/A

27.2 VTU REGISTERS

The VTU contains a total of 19 user accessible registers, as listed in Table 27-2. All registers are word-wide and are initialized to a known value upon reset. All software accesses to the VTU registers must be word accesses.

Table 27-2. VTU Registers

Name	Address	Description
MODE	FF FF80h	Mode Control Register
IO1CTL	FF FF82h	I/O Control Register 1
IO2CTL	FF FF84h	I/O Control Register 2
INTCTL	FF FF86h	Interrupt Control Register
INTPND	FF FF88h	Interrupt Pending Register
CLK1PS	FF FF8Ah	Clock Prescaler Register 1
CLK2PS	FF FF98h	Clock Prescaler Register 2
COUNT	FF FF8Ch	Counter 1 Register
PERCAP	FF FF8Eh	Period/Capture 1 Register
DTYCAP	FF FF90h	Duty Cycle/Capture 1 Register
COUNT2	FF FF92h	Counter 2 Register
PERCAP2	FF FF94h	Period/Capture 2Register
DTYCAP2	FF FF96h	Duty Cycle/Capture 2Register
COUNT3	FF FF9Ah	Counter 3 Register
PERCAP3	FF FF9Ch	Period/Capture 3Register
DTYCAP3	FF FF9Eh	Duty Cycle/Capture 3Register
COUNT4	FF FFA0h	Counter 4 Register
PERCAP4	FF FFA2h	Period/Capture 4Register
DTYCAP4	FF FFA4h	Duty Cycle/Capture 4Register

Copyright © 2007–2013, Texas Instruments Incorporated

27.2.1 Mode Control Register (MODE)

The MODE register is a word-wide read/write register which controls the mode selection of all four timer subsystems. The register is clear after reset.

7	6	5	4	3	2	1	0
TMOD2		T4RUN	T3RUN	TMOD1		T2RUN	T1RUN

15	14	13	12	11	10	9	8
TMOD4		T8RUN	T7RUN	TMOD3		T6RUN	T5RUN

TxRUN — The Timer Run bit controls whether the corresponding timer is stopped or running. If set, the associated counter and clock prescaler is started depending on the mode of operation. Once set, the clock to the clock prescaler and the counter are enabled and the counter will increment each time the clock prescaler counter value matches the value defined in the associated clock prescaler field (CxPR- SC).
0 – Timer stopped.
1 – Timer running.

TMODx — The Timer System Operating Mode field enables or disables the Timer Subsystem and defines its operating mode.

- 00 – Low-Power Mode. All clocks to the counter subsystem are stopped. The counter is stopped regardless of the value of the TxRUN bits. Read operations to the Timer Subsystem will return the last value; software must not perform any write operations to the Timer Subsystem while it is disabled since those will be ignored.
- 01 – Dual 8-bit PWM mode. Each 8-bit counter may individually be started or stopped via its associated TxRUN bit. The TIOx pins will function as PWM outputs.
- 10 – 16-bit PWM mode. The two 8-bit counters are concatenated to form a single 16-bit counter. The counter may be started or stopped with the lower of the two TxRUN bits, i.e. T1RUN, T3RUN, T5RUN, and T7RUN. The TIOx pins will function as PWM outputs.
- 11 – Capture Mode. Both 8-bit counters are concatenated and operate as a single 16-bit counter. The counter may be started or stopped with the lower of the two TxRUN bits, i.e., T1RUN, T3RUN, T5RUN, and T7RUN. The TIOx pins will function as capture inputs.

27.2.2 I/O Control Register 1 (IO1CTL)

The I/O Control Register 1 (IO1CTL) is a word-wide read/ write register. The register controls the function of the I/O pins TIO1 through TIO4 depending on the selected mode of operation. The register is clear after reset.

7	6	4	3	2	0
P2POL	C2EDG		P1POL	C1EDG	

15	14	12	11	10	8
P4POL	C4EDG		P3POL	C3EDG	

CxEDG — The Capture Edge Control field specifies the polarity of a capture event and the reset of the counter. The value of this three bit field has no effect while operating in PWM mode.

CxEDG	Capture	Counter Reset
000	Rising Edge	No
001	Falling Edge	No
010	Rising Edge	Yes
011	Falling Edge	Yes
100	Both edges	No
101	Both edges	Rising edge
110	Both edges	Falling edge
111	Both edges	Both edges

PxPOL — The PWM Polarity bit selects the output polarity. While operating in PWM mode the bit specifies the polarity of the corresponding PWM output (TIOx). Once a counter is stopped, the output will assume the value of PxPOL, i.e., its initial value. The PxPOL bit has no effect while operating in capture mode.
0 – The PWM output goes high at the 00h to 01h transition of the counter and will go low once the counter value matches the duty cycle value.
1 – The PWM output goes low at the 00h to 01h transition of the counter and will go high once the counter value matches the duty cycle value.

27.2.3 I/O Control Register 2 (IO2CTL)

The IO2CTL register is a word-wide read/write register. The register controls the functionality of the I/O pins TIO5 through TIO8 depending on the selected mode of operation. The register is cleared at reset.

7	6	4	3	2	0
P6POL	C6EDG		P5POL	C5EDG	

15	14	12	11	10	8
P8POL	C8EDG		P7POL	C7EDG	

The functionality of the bit fields of the IO2CTL register is identical to the ones described in the IO1CTL register section.

27.2.4 Interrupt Control Register (INTCTL)

The INTCTL register is a word-wide read/write register. It contains the interrupt enable bits for all 16 interrupt sources of the VTU. Each interrupt enable bit corresponds to an interrupt pending bit located in the Interrupt Pending Register (INTPND). All INTCTL register bits are solely under software control. The register is clear after reset.

7	6	5	4	3	2	1	0
12DEN	I2CEN	I2BEN	I2AEN	I1DEN	I1CEN	I1BEN	I1AEN

15	14	13	12	11	10	9	8
I4DEN	I4CEN	I4BEN	I4AEN	I3DEN	I3CEN	I3BEN	I3AEN

IxAEN — The Timer x Interrupt A Enable bit controls interrupt requests triggered on the corresponding IxAPD bit being set. The associated IxAPD bit will be updated regardless of the value of the IxAEN bit.
0 – Disable system interrupt request for the IxAPD pending bit.
1 – Enable system interrupt request for the IxAPD pending bit.

IxBEN — The Timer x Interrupt B Enable bit controls interrupt requests triggered on the corresponding IxBPD bit being set. The associated IxBPD bit will be updated regardless of the value of the IxBEN bit.
0 – Disable system interrupt request for the IxBPD pending bit.
1 – Enable system interrupt request for the IxBPD pending bit.

IxCEN — The Timer x Interrupt C Enable bit controls interrupt requests triggered on the corresponding IxCPD bit being set. The associated IxCPD bit will be updated regardless of the value of the IxCEN bit.
0 – Disable system interrupt request for the IxCPD pending bit.
1 – Enable system interrupt request for the IxCPD pending bit.

IxDEN — Timer x Interrupt D Enable bit controls interrupt requests triggered on the corresponding IxDPD bit being set. The associated IxDPD bit will be updated regardless of the value of the IxDEN bit.
0 – Disable system interrupt request for the IxDPD pending bit.
1 – Enable system interrupt request for the IxDPD pending bit.

Copyright © 2007–2013, Texas Instruments Incorporated

27.2.5 Interrupt Pending Register (INTPND)

The INTPND register is a worldwide read/write register which contains all 16 interrupt pending bits. There are four interrupt pending bits called IxAPD through IxDPD for each timer subsystem. Each interrupt pending bit is set by a hardware event and can be cleared if software writes a 1 to the bit position. The value will remain unchanged if a 0 is written to the bit position. All interrupt pending bits are cleared (0) upon reset.

7	6	5	4	3	2	1	0
I2DPD	I2CPD	I2BPD	I2APD	I1DPD	I1CPD	I1BPD	I1APD
15	14	13	12	11	10	9	8
I4DPD	I4CPD	I4BPD	I4APD	I3DPD	I3CPD	I3BPD	I3APD

IxAPD — The Timer x Interrupt A Pending bit indicates that an interrupt condition for the related timer subsystem has occurred. Table 27-1 lists the hardware condition which causes this bit to be set.
0 – No interrupt pending.
1 – Timer interrupt condition occurred.

IxBPD — The Timer x Interrupt B Pending bit indicates that an interrupt condition for the related timer subsystem has occurred. Table 80 on page 211 lists the hardware condition which causes this bit to be set.
0 – No interrupt pending.
1 – Timer interrupt condition occurred.

IxCPD — The Timer x Interrupt C Pending bit indicates that an interrupt condition for the related timer subsystem has occurred. Table 80 on page 211 lists the hardware condition which causes this bit to be set.
0 – No interrupt pending.
1 – Timer interrupt condition occurred.

IxDPD — The Timer x Interrupt D Pending bit indicates that an interrupt condition for the related timer subsystem has occurred. Table 80 on page 211 lists the hardware condition which causes this bit to be set.
0 – No interrupt pending.
1 – Timer interrupt condition occurred.

27.2.6 Clock Prescaler Register 1 (CLK1PS)

The CLK1PS register is a word-wide read/write register. The register is split into two 8-bit fields called C1PRSC and C2PRSC. Each field holds the 8-bit clock prescaler compare value for timer subsystems 1 and 2 respectively. The register is cleared at reset.

15 – 8	7 – 0
C2PRSC	C1PRSC

C1PRSC — The Clock Prescaler 1 Compare Value field holds the 8-bit prescaler value for timer subsystem 1. The counter of timer subsystem is incremented each time when the clock prescaler compare value matches the value of the clock prescaler counter. The division ratio is equal to (C1PRSC + 1). For example, 00h is a ratio of 1, and FFh is a ratio of 256.

C2PRSC — The Clock Prescaler 2 Compare Value field holds the 8-bit prescaler value for timer subsystem 2. The counter of timer subsystem is incremented each time when the clock prescaler compare value matches the value of the clock prescaler counter. The division ratio is equal to (C2PRSC + 1).

27.2.7 Clock Prescaler Register 2 (CLK2PS)

The Clock Prescaler Register 2 (CLK2PS) is a word-wide read/write register. The register is split into two 8-bit fields called C3PRSC and C4PRSC. Each field holds the 8-bit clock prescaler compare value for timer subsystems 3 and 4 respectively. The register is cleared at reset.

15 – 8	7 – 0
C4PRSC	C3PRSC

C3PRSC — The Clock Prescaler 3 Compare Value field holds the 8-bit prescaler value for timer subsystem 3. The counter of timer subsystem is incremented each time when the clock prescaler compare value matches the value of the clock prescaler counter. The division ratio is equal to (C3PRSC + 1).

C4PRSC — The Clock Prescaler 4 Compare Value field holds the 8-bit prescaler value for timer subsystem 4. The counter of timer subsystem is incremented each time when the clock prescaler compare value matches the value of the clock prescaler counter. The division ratio is equal to (C4PRSC + 1).

Copyright © 2007–2013, Texas Instruments Incorporated

27.2.8 Counter Register n (COUNTx)

The Counter (COUNTx) registers are word-wide read/write registers. There are a total of four registers called COUNT1 through COUNT4, one for each of the four timer subsystems. Software may read the registers at any time. Reading the register will return the current value of the counter. The register may only be written if the counter is stopped (i.e. if both TxRUN bits associated with a timer subsystem are clear). The registers are cleared at reset.

15	0
CNTx	

27.2.9 Period/Capture Register n (PERCAPx)

The PERCAPx registers are word-wide read/write registers. There are a total of four registers called PERCAP1 through PERCAP4, one for each timer subsystem. The registers hold the period compare value in PWM mode of the counter value at the time the last associated capture event occurred. In PWM mode the register is double buffered. If a new period compare value is written while the counter is running, the write will not take effect until counter value matches the previous period compare value or until the counter is stopped. Reading may take place at any time and will return the most recent value which was written. The PERCAPx registers are cleared at reset.

15	0
PCAPx	

27.2.10 Duty Cycle/Capture Register n (DTYCAPx)

The Duty Cycle/Capture (DTYCAPx) registers are word-wide read/write registers. There are a total of four registers called DTYCAP1 through DTYCAP4, one for each timer subsystem. The registers hold the period compare value in PWM mode or the counter value at the time the last associated capture event occurred. In PWM mode, the register is double buffered. If a new duty cycle compare value is written while the counter is running, the write will not take effect until the counter value matches the previous period compare value or until the counter is stopped. The update takes effect on period boundaries only. Reading may take place at any time and will return the most recent value which was written. The DTYCAPx registers are cleared at reset.

15	0
DCAPx	

Copyright © 2007–2013, Texas Instruments Incorporated

28 REGISTER MAP

Table 28-1 is a detailed memory map showing the specific memory address of the memory, I/O ports, and registers. The table shows the starting address, the size, and a brief description of each memory block and register. For detailed information on using these memory locations, see the applicable sections in the data sheet.

All addresses not listed in the table are reserved and must not be read or written. An attempt to access an unlisted address will have unpredictable results.

Each byte-wide register occupies a single address and can be accessed only in a byte-wide transaction. Each word-wide register occupies two consecutive memory addresses and can be accessed only in a word-wide transaction. Both the byte-wide and word-wide registers reside at word boundaries (even addresses). Therefore, each byte-wide register uses only the lowest eight bits of the internal data bus.

Most device registers are read/write registers. However, some registers are read-only or write-only, as indicated in the table. An attempt to read a write-only register or to write a read-only register will have unpredictable results.

When software writes to a register in which one or more bits are reserved, it must write a zero to each reserved bit unless indicated otherwise in the description of the register. Reading a reserved bit returns an undefined value.

Table 28-1. Detailed Device Mapping

Register Name	Size	Address	Access Type	Value After Reset	Comments
Bluetooth LLC Registers					
PLN	Byte	0E F180h	Write-Only		
WHITENING_CHANNEL_ SELECTION	Byte	0E F181h	Write-Only		
SINGLE_FREQUENCY_ SELECTION	Byte	0E F182h	Write-Only		
LN_BT_CLOCK_0	Byte	0E F198h	Read-Only		
LN_BT_CLOCK_	Byte	0E F199h	Read-Only		
LN_BT_CLOCK_2	Byte	0E F19Ah	Read-Only		
LN_BT_CLOCK_3	Byte	0E F19Bh	Read-Only		
RX_CN	Byte	0E F19Ch	Read-Only		
TX_CN	Byte	0E F19Dh	Read-Only		
AC_ACCEPTLVL	Word	0E F19Eh	Write-Only		
LAP_ACCEPTLVL	Byte	0E F1A0h	Write-Only		
RFSYNCH_DELAY	Byte	0E F1A1h	Write-Only		
SPI_READ	Word	0E F1A2h	Read-Only		
SPI_MODE_CONFIG	Byte	0E F1A4h	Write-Only		
M_COUNTER_0	Byte	0E F1A6h	Read/Write		
M_COUNTER_	Byte	0E F1A7h	Read/Write		
M_COUNTER_2	Byte	0E F1A8h	Read/Write		
N_COUNTER_0	Byte	0E F1AAh	Write-Only		
N_COUNTER_	Byte	0E F1ABh	Write-Only		
BT_CLOCK_WR_0	Byte	0E F1ACh	Write-Only		
BT_CLOCK_WR_	Byte	0E F1ADh	Write-Only		
BT_CLOCK_WR_2	Byte	0E F1AEh	Write-Only		
BT_CLOCK_WR_3	Byte	0E F1AFh	Write-Only		
WTPTC_1SLOT	Word	0E F1B0h	Write-Only		
WTPTC_3SLOT	Word	0E F1B2h	Write-Only		

Copyright © 2007–2013, Texas Instruments Incorporated

Table 28-1. Detailed Device Mapping (continued)

WTPTC_5SLOT	Word	0E F1B4h	Write-Only		
SEQ_RESET	Byte	0E F1B6h	Write-Only		
SEQ_CONTINUE	Byte	0E F1B7h	Write-Only		
RX_STATUS	Byte	0E F1B8h	Read-Only		
CHIP_ID	Byte	0E F1BAh	Read-Only		
INT_VECTOR	Byte	0E F1BCh	Read-Only		
SYSTEM_CLK_EN	Byte	0E F1BEh	Write-Only		
LINKTIMER_WR_RD	Word	0E F1C0h	Read-Only		
LINKTIMER_SELECT	Byte	0E F1C2h	Read-Only		
LINKTIMER_STATUS_ EXP_FLAG	Byte	0E F1C4h	Read-Only		
LINKTIMER_STATUS_ RD_WR_FLAG	Byte	0E F1C5h	Read-Only		
LINKTIMER_ADJUST_ PLUS	Byte	0E F1C6h	Read-Only		
LINKTIMER_ADJUST_ MINUS	Byte	0E F1C7h	Read-Only		
SLOTTIMER_WR_RD	Byte	0E F1C8h	Read-Only		
USB Node Registers					
MCNTRL	Byte	FF FD80h	Read/Write	00h	
FAR	Byte	FF FD88h	Read/Write	00h	
NFSR	Byte	FF FD8Ah	Read/Write	00h	
MAEV	Byte	FF FD8Ch	Read/Write	00h	
MAMSK	Byte	FF FD8Eh	Read/Write	00h	
ALTEV	Byte	FF FD90h	Read/Write	00h	
ALTMSK	Byte	FF FD92h	Read/Write	00h	
TXEV	Byte	FF FD94h	Read/Write	00h	
TXMSK	Byte	FF FD96h	Read/Write	00h	
RXEV	Byte	FF FD98h	Read/Write	00h	
RXMSK	Byte	FF FD9Ah	Read/Write	00h	
NAKEV	Byte	FF FD9Ch	Read/Write	00h	
NAKMSK	Byte	FF FD9Eh	Read/Write	00h	
FWEV	Byte	FF FDA0h	Read/Write	00h	
FWMSK	Byte	FF FDA2h	Read/Write	00h	
FNH	Byte	FF FDA4h	Read/Write	C0h	
FNL	Byte	FF FDA6h	Read/Write	00h	
DMACNTRL	Byte	FF FDA8h	Read/Write	00h	
DMAEV	Byte	FF FDAAh	Read/Write	00h	
DMAMSK	Byte	FF FDACh	Read/Write	00h	
MIR	Byte	FF FDAEh	Read/Write	1Fh	
DMACNT	Byte	FF FDB0h	Read/Write	00h	
DMAERR	Byte	FF FDB2h	Read/Write	00h	
EPC0	Byte	FF FDC0h	Read/Write	00h	
TXD0	Byte	FF FDC2h	Read/Write	XXh	
TXS0	Byte	FF FDC4h	Read/Write	08h	
TXC0	Byte	FF FDC6h	Read/Write	00h	
RXD0	Byte	FF FDCAh	Read/Write	XXh	
RXS0	Byte	FF FDCCh	Read/Write	00h	
RXC0	Byte	FF FDCEh	Read/Write	00h	

Copyright © 2007–2013, Texas Instruments Incorporated

Table 28-1. Detailed Device Mapping (continued)

EPC1	Byte	FF FDD0h	Read/Write	00h	
TXD1	Byte	FF FDD2h	Read/Write	XXh	
TXS1	Byte	FF FDD4h	Read/Write	1Fh	
TXC1	Byte	FF FDD6h	Read/Write	00h	
EPC2	Byte	FF FDD8h	Read/Write	00h	
RXD	Byte	FF FDDAh	Read/Write	XXh	
RXS	Byte	FF FDDCh	Read/Write	00h	
RXC	Byte	FF FDDEh	Read/Write	00h	
EPC3	Byte	FF FDE0h	Read/Write	00h	
TXD2	Byte	FF FDE2h	Read/Write	XXh	
TXS2	Byte	FF FDE4h	Read/Write	1Fh	
TXC2	Byte	FF FDE6h	Read/Write	00h	
EPC4	Byte	FF FDE8h	Read/Write	00h	
RXD2	Byte	FF FDEAh	Read/Write	XXh	
RXS2	Byte	FF FDECh	Read/Write	00h	
RXC2	Byte	FF FDEEh	Read/Write	00h	
EPC5	Byte	FF FDF0h	Read/Write	00h	
TXD3	Byte	FF FDF2h	Read/Write	XXh	
TXS3	Byte	FF FDF4h	Read/Write	1Fh	
TXC3	Byte	FF FDF6h	Read/Write	00h	
EPC6	Byte	FF FDF8h	Read/Write	00h	
RXD3	Byte	FF FDFAh	Read/Write	XXh	
RXS3	Byte	FF FDFCh	Read/Write	00h	
RXC3	Byte	FF FDFEh	Read/Write	00h	
CAN Module Message Buffers					
CMB0_CNSTAT	Word	0E F000h	Read/Write	XXXXh	
CMB0_TSTP	Word	0E F002h	Read/Write	XXXXh	
CMB0_DATA3	Word	0E F004h	Read/Write	XXXXh	
CMB0_DATA2	Word	0E F006h	Read/Write	XXXXh	
CMB0_DATA	Word	0E F008h	Read/Write	XXXXh	
CMB0_DATA0	Word	0E F00Ah	Read/Write	XXXXh	
CMB0_ID0	Word	0E F00Ch	Read/Write	XXXXh	
CMB0_ID	Word	0E F00Eh	Read/Write	XXXXh	
CMB1	8-word	0E F010h–0E F01Fh	Read/Write	XXXXh	Same register layout as CMB0.
CMB2	8-word	0E F020h–0E F02Fh	Read/Write	XXXXh	Same register layout as CMB0.
CMB3	8-word	0E F030h–0E F03Fh	Read/Write	XXXXh	Same register layout as CMB0.
CMB4	8-word	0E F040h–0E F04Fh	Read/Write	XXXXh	Same register layout as CMB0.
CMB5	8-word	0E F050h–0E F05Fh	Read/Write	XXXXh	Same register layout as CMB0
CMB6	8-word	0E F060h–0E F06Fh	Read/Write	XXXXh	Same register layout as CMB0.
CMB7	8-word	0E F070h–0E F07Fh	Read/Write	XXXXh	Same register layout as CMB0.
CMB8	8-word	0E F080h–0E F08Fh	Read/Write	XXXXh	Same register layout as CMB0.
CMB9	8-word	0E F090h–0E F09Fh	Read/Write	XXXXh	Same register layout as CMB0.

Copyright © 2007–2013, Texas Instruments Incorporated

Table 28-1. Detailed Device Mapping (continued)

CMB10	8-word	0E F0A0h–0E F0AFh	Read/Write	XXXXh	Same register layout as CMB0.
CMB11	8-word	0E F0B0h–0E F0BFh	Read/Write	XXXXh	Same register layout as CMB0.
CMB12	8-word	0E F0C0h–0E F0CFh	Read/Write	XXXXh	Same register layout as CMB0.
CMB13	8-word	0E F0D0h–0E F0DFh	Read/Write	XXXXh	Same register layout as CMB0.
CMB14	8-word	0E F0E0h–0E F0EFh	Read/Write	XXXXh	Same register layout as CMB0.
CAN Registers					
CGCR	Word	0E F100h	Read/Write	0000h	
CTIM	Word	0E F102h	Read/Write	0000h	
GMSKX	Word	0E F104h	Read/Write	0000h	
GMSKB	Word	0E F106h	Read/Write	0000h	
BMSKX	Word	0E F108h	Read/Write	0000h	
BMSKB	Word	0E F10Ah	Read/Write	0000h	
CIEN	Word	0E F10Ch	Read/Write	0000h	
CIPND	Word	0E F10Eh	Read Only	0000h	
CICLR	Word	0E F110h	Write Only	0000h	
CICEN	Word	0E F112h	Read/Write	0000h	
CSTPND	Word	0E F114h	Read Only	0000h	
CANEC	Word	0E F116h	Read Only	0000h	
CEDIAG	Word	0E F118h	Read Only	0000h	
CTMR	Word	0E F11Ah	Read Only	0000h	
DMA Controller					
ADCA0	Double Word	FF F800h	Read/Write	0000 0000h	
ADRA0	Double Word	FF F804h	Read/Write	0000 0000h	
ADCB0	Double Word	FF F808h	Read/Write	0000 0000h	
ADRB0	Double Word	FF F80Ch	Read/Write	0000 0000h	
BLTC0	Word	FF F810h	Read/Write	0000h	
BLTR0	Word	FF F814h	Read/Write	0000h	
DMACNTL0	Word	FF F81Ch	Read/Write	0000h	
DMASTAT0	Byte	FF F81Eh	Read/Write	00h	
ADCA1	Double Word	FF F820h	Read/Write	0000 0000h	
ADRA1	Double Word	FF F824h	Read/Write	0000 0000h	
ADCB1	Double Word	FF F828h	Read/Write	0000 0000h	
ADRB1	Double Word	FF F82Ch	Read/Write	0000 0000h	
BLTC1	Word	FF F830h	Read/Write	0000h	
BLTR1	Word	FF F834h	Read/Write	0000h	
DMACNTL1	Word	FF F83Ch	Read/Write	0000h	
DMSTAT1	Byte	FF F83Eh	Read/Write	0000 0000h	
ADCA2	Double Word	FF F840h	Read/Write	0000 0000h	
ADRA2	Double Word	FF F844h	Read/Write	0000 0000h	
ADCB2	Double Word	FF F84Ch	Read/Write	0000 0000h	
ADRB2	Double Word	FF F84Ch	Read/Write	0000 0000h	
BLTC2	Word	FF F850h	Read/Write	0000h	
BLTR2	Word	FF F854h	Read/Write	0000h	
DMACNTL2	Word	FF F85Ch	Read/Write	0000h	
DMASTAT2	Byte	FF F85Eh	Read/Write	00h	

Copyright © 2007–2013, Texas Instruments Incorporated

Table 28-1. Detailed Device Mapping (continued)

ADCA3	Double Word	FF F860h	Read/Write	0000 0000h	
ADRA3	Double Word	FF F864h	Read/Write	0000 0000h	
ADCB3	Double Word	FF F868h	Read/Write	0000 0000h	
ADRB3	Double Word	FF F86Ch	Read/Write	0000 0000h	
BLTC3	Word	FF F870h	Read/Write	0000h	
BLTR3	Word	FF F874h	Read/Write	0000h	
DMACNTL3	Word	FF F87Ch	Read/Write	0000h	
DMASTAT3	Byte	FF F87Eh	Read/Write	00h	
Bus Interface Unit					
BCFG	Byte	FF F900h	Read/Write	07h	
IOCFG	Word	FF F902h	Read/Write	069Fh	
SZCFG0	Word	FF F904h	Read/Write	069Fh	
SZCFG1	Word	FF F906h	Read/Write	069Fh	
SZCFG2	Word	FF F908h	Read/Write	069Fh	
System Configuration					
MCFG	Byte	FF F910h	Read/Write	00h	
DBGCFG	Byte	FF F912h	Read/Write	00h	
MSTAT	Byte	FF F914h	Read Only	ENV2:0 pins	
SWRESET	Byte	FF F918h	Write Only	N/A	
Flash Program Memory Interface					
FMIBAR	Word	FF F940h	Read/Write	0000h	
FMIBDR	Word	FF F942h	Read/Write	0000h	
FM0WER	Word	FF F944h	Read/Write	0000h	
FM1WER	Word	FF F946h	Read/Write	0000h	
FMCTRL	Word	FF F94Ch	Read/Write	0000h	
FMSTAT	Word	FF F94Eh	Read/Write	0000h	
FMPSR	Byte	FF F950h	Read/Write	04h	
FMSTART	Byte	FF F952h	Read/Write	18h	
FMTRAN	Byte	FF F954h	Read/Write	30h	
FMPROG	Byte	FF F956h	Read/Write	16h	
FMPERASE	Byte	FF F958h	Read/Write	04h	
FMMERASE0	Byte	FF F95Ah	Read/Write	EAh	
FMEND	Byte	FF F95Eh	Read/Write	18h	
FMMEND	Byte	FF F960h	Read/Write	3Ch	
FMRCV	Byte	FF F962h	Read/Write	04h	
FMAR0	Word	FF F964h	Read Only		
FMAR1	Word	FF F966h	Read Only		
FMAR2	Word	FF F968h	Read Only		
Flash Data Memory Interface					
FSMIBAR	Word	FF F740h	Read/Write	0000h	
FSMIBDR	Word	FF F742h	Read/Write	0000h	
FSM0WER	Word	FF F744h	Read/Write	0000h	
FSMCTRL	Word	FF F74Ch	Read/Write	0000h	
FSMSTAT	Word	FF F74Eh	Read/Write	0000h	
FSMPSR	Byte	FF F750h	Read/Write	04h	
FSMSTART	Byte	FF F752h	Read/Write	18h	
FSMTRAN	Byte	FF F754h	Read/Write	30h	
FSMPROG	Byte	FF F756h	Read/Write	16h	

Copyright © 2007–2013, Texas Instruments Incorporated

Table 28-1. Detailed Device Mapping (continued)

FSMPERASE	Byte	FF F758h	Read/Write	04h	
FSMMERASE0	Byte	FF F75Ah	Read/Write	EAh	
FSMEND	Byte	FF F75Eh	Read/Write	18h	
FSMMEND	Byte	FF F760h	Read/Write	3Ch	
FSMRCV	Byte	FF F762h	Read/Write	04h	
FSMAR0	Word	FF F764h	Read Only		
FSMAR	Word	FF F766h	Read Only		
FSMAR2	Word	FF F768h	Read Only		
CVSD/PCM Converter					
CVSDIN	Word	FF FC20h	Write Only	0000h	
CVSDOUT	Word	FF FC22h	Read Only	0000h	
PCMIN	Word	FF FC24h	Write Only	0000h	
PCMOUT	Word	FF FC26h	Read Only	0000h	
LOGIN	Byte	FF FC28h	Write Only	0000h	
LOGOUT	Byte	FF FC2Ah	Read Only	0000h	
LINEARIN	Word	FF FC2Ch	Write Only	0000h	
LINEAROUT	Word	FF FC2Eh	Read Only	0000h	
CVCTRL	Word	FF FC30h	Read/Write	0000h	
CVSTAT	Word	FF FC32h	Read Only	0000h	
CVTEST	Word	FF FC34h	Read/Write	0000h	
CVRADD	Word	FF FC36h	Read/Write	0000h	
CVRDAT	Word	FF FC38h	Read/Write	0000h	
CVDECOUT	Word	FF FC3Ah	Read Only	0000h	
CVENCIN	Word	FF FC3Ch	Read Only	0000h	
CVENCPR	Word	FF FC3Eh	Read Only	0000h	
Triple Clock + Reset					
CRCTRL	Byte	FF FC40h	Read/Write	00X0 0110b	
PRSFC	Byte	FF FC42h	Read/Write	4Fh	
PRSSC	Byte	FF FC44h	Read/Write	B6h	
PRSAC	Byte	FF FC46h	Read/Write	FFh	
Power Management					
PMMCR	Byte	FF FC60h	Read/Write	00h	
PMMSR	Byte	FF FC62h	Read/Write	0000 0XXXb	
Multi-Input Wake-Up 0					
WK0EDG	Word	FF FC80h	Read/Write	00h	
WK0ENA	Word	FF FC82h	Read/Write	00h	
WK0ICTL	Word	FF FC84h	Read/Write	00h	
WK0ICTL2	Word	FF FC86h	Read/Write	00h	
WK0PND	Word	FF FC88h	Read/Write	00h	Bits may only be set; writing 0 has no effect.
WK0PCL	Word	FF FC8Ah	Write Only	XXh	
WK0IENA	Word	FF FC8Ch	Read/Write	00h	
Multi-Input Wake Up 1					
WK1EDG	Word	FF FCA0h	Read/Write	00h	
WK1ENA	Word	FF FCA2h	Read/Write	00h	
WK1ICTL1	Word	FF FCA4h	Read/Write	00h	
WK1ICTL2	Word	FF FCA6h	Read/Write	00h	

Copyright © 2007–2013, Texas Instruments Incorporated

Table 28-1. Detailed Device Mapping (continued)

WK1PND	Word	FF FCA8h	Read/Write	00h	Bits may only be set; writing 0 has no effect.
WK1PCL	Word	FF FCAAh	Write Only	XXh	
WK1IENA	Word	FF FCACh	Read/Write	00h	
General-Purpose I/O Ports					
PBALT	Byte	FF FB00h	Read/Write	00h	
PBDIR	Byte	FF FB02h	Read/Write	00h	
PBDIN	Byte	FF FB04h	Read Only	XXh	
PBDOUT	Byte	FF FB06h	Read/Write	XXh	
PBWPU	Byte	FF FB08h	Read/Write	00h	
PBHDRV	Byte	FF FB0Ah	Read/Write	00h	
PBALTS	Byte	FF FB0Ch	Read/Write	00h	
PCALT	Byte	FF FB10h	Read/Write	00h	
PCDIR	Byte	FF FB12h	Read Only	00h	
PCDIN	Byte	FF FB14h	Read/Write	XXh	
PCDOUT	Byte	FF FB16h	Read/Write	XXh	
PCWPU	Byte	FF FB18h	Read/Write	00h	
PCHDRV	Byte	FF FB1Ah	Read/Write	00h	
PCALTS	Byte	FF FB1Ch	Read/Write	00h	
PEALT	Byte	FF FCC0h	Read/Write	00h	
PEDIR	Byte	FF FCC2h	Read/Write	00h	
PEDIN	Byte	FF FCC4h	Read Only	XXh	
PEDOUT	Byte	FF FCC6h	Read/Write	XXh	
PEWPU	Byte	FF FCC8h	Read/Write	00h	
PEHDRV	Byte	FF FCCAh	Read/Write	00h	
PEALTS	Byte	FF FCCCh	Read/Write	00h	
PFALT	Byte	FF FCE0h	Read/Write	00h	
PFDIR	Byte	FF FCE2h	Read/Write	00h	
PFDIN	Byte	FF FCE4h	Read Only	XXh	
PFDOUT	Byte	FF FCE6h	Read/Write	XXh	
PFWPU	Byte	FF FCE8h	Read/Write	00h	
PFHDRV	Byte	FF FCEAh	Read/Write	00h	
PFALTS	Byte	FF FCECh	Read/Write	00h	
PGALT	Byte	FF F300h	Read/Write	00h	
PGDIR	Byte	FF F302h	Read/Write	00h	
PGDIN	Byte	FF F304h	Read Only	XXh	
PGDOUT	Byte	FF F306h	Read/Write	XXh	
PGWPU	Byte	FF F308h	Read/Write	00h	
PGHDRV	Byte	FF F30Ah	Read/Write	00h	
PGALTS	Byte	FF F30Ch	Read/Write	00h	
PHALT	Byte	FF F320h	Read/Write	00h	
PHDIR	Byte	FF F322h	Read/Write	00h	
PHDIN	Byte	FF F324h	Read Only	XXh	
PHDOUT	Byte	FF F326h	Read/Write	XXh	
PHWPU	Byte	FF F328h	Read/Write	00h	
PHHDRV	Byte	FF F32Ah	Read/Write	00h	
PHALTS	Byte	FF F32Ch	Read/Write	00h	
PJALT	Byte	FF F340h	Read/Write	00h	

Copyright © 2007–2013, Texas Instruments Incorporated

Table 28-1. Detailed Device Mapping (continued)

PJDIR	Byte	FF F342h	Read/Write	00h	
PJDIN	Byte	FF F344h	Read Only	XXh	
PJDOUT	Byte	FF F346h	Read/Write	XXh	
PJWPU	Byte	FF F348h	Read/Write	00h	
PJHDRV	Byte	FF F34Ah	Read/Write	00h	
PJALTS	Byte	FF F34Ch	Read/Write	00h	
Advanced Audio Interface					
ARFR	Word	FF FD40h	Read Only	0000h	
ARDR0	Word	FF FD42h	Read Only	0000h	
ARDR	Word	FF FD44h	Read Only	0000h	
ARDR2	Word	FF FD46h	Read Only	0000h	
ARDR3	Word	FF FD48h	Read Only	0000h	
ATFR	Word	FF FD4Ah	Write Only	XXXXh	
ATDR0	Word	FF FD4Ch	Write Only	0000h	
ATDR	Word	FF FD4Eh	Write Only	0000h	
ATDR2	Word	FF FD50h	Write Only	0000h	
ATDR3	Word	FF FD52h	Write Only	0000h	
AGCR	Word	FF FD54h	Read/Write	0000h	
AISCR	Word	FF FD56h	Read/Write	0000h	
ARSCR	Word	FF FD58h	Read/Write	0004h	
ATSCR	Word	FF FD5Ah	Read/Write	F003h	
ACCR	Word	FF FD5Ch	Read/Write	0000h	
ADMACR	Word	FF FD5Eh	Read/Write	0000h	
Interrupt Control Unit					
IVCT	Byte	FF FE00h	Read Only	10h	Fixed Addr.
NMISTAT	Byte	FF FE02h	Read Only	00h	
EXNMI	Byte	FF FE04h	Read/Write	XXXX 00X0b	
ISTAT0	Word	FF FE0Ah	Read Only	0000h	
ISTAT	Word	FF FE0Ch	Read Only	0000h	
ISTAT2	Word	FF FE20h	Read Only	0000h	
IENAM0	Word	FF FE0Eh	Read/Write	FFFFh	
IENAM	Word	FF FE10h	Read/Write	FFFFh	
IENAM2	Word	FF FE22h	Read/Write	FFFFh	
Microwire/SPI Interface					
MWDAT	Word	FF F3A0h	Read/Write	XXXXh	
MWCTL	Word	FF F3A2h	Read/Write	0000h	
MWSTAT	Word	FF F3A4h	Read Only	All implemented bits are 0	
UART0					
U0TBUF	Byte	FF F200h	Read/Write	XXh	
U0RBUF	Byte	FF F202h	Read Only	XXh	
U0ICTRL	Byte	FF F204h	Read/Write	01h	Bits 0:1 read only
U0STAT	Byte	FF F206h	Read only	00h	
U0FRS	Byte	FF F208h	Read/Write	00h	
U0MDSL	Byte	FF F20Ah	Read/Write	00h	
U0BAUD	Byte	FF F20Ch	Read/Write	00h	
U0PSR	Byte	FF F20Eh	Read/Write	00h	
U0OVR	Byte	FF F210h	Read/Write	00h	

Copyright © 2007–2013, Texas Instruments Incorporated

Table 28-1. Detailed Device Mapping (continued)

U0MDSL2	Byte	FF F212h	Read/Write	00h	
U0SPOS	Byte	FF F214h	Read/Write	06h	
UART1					
U1TBUF	Byte	FF F220h	Read/Write	XXh	
U1RBUF	Byte	FF F222h	Read Only	XXh	
U1ICTRL	Byte	FF F224h	Read/Write	01h	Bits 0:1 read only
U1STAT	Byte	FF F226h	Read only	00h	
U1FRS	Byte	FF F228h	Read/Write	00h	
U1MDSL1	Byte	FF F22Ah	Read/Write	00h	
U1BAUD	Byte	FF F22Ch	Read/Write	00h	
U1PSR	Byte	FF F22Eh	Read/Write	00h	
U1OVR	Byte	FF F230h	Read/Write	00h	
U1MDSL2	Byte	FF F232h	Read/Write	00h	
U1SPOS	Byte	FF F234h	Read/Write	06h	
UART2					
U2TBUF	Byte	FF F240h	Read/Write	XXh	
U2RBUF	Byte	FF F242h	Read Only	XXh	
U2ICTRL	Byte	FF F244h	Read/Write	01h	Bits 0:1 read only
U2STAT	Byte	FF F246h	Read only	00h	
U2FRS	Byte	FF F248h	Read/Write	00h	
U2MDSL	Byte	FF F24Ah	Read/Write	00h	
U2BAUD	Byte	FF F24Ch	Read/Write	00h	
U2PSR	Byte	FF F24Eh	Read/Write	00h	
U2OVR	Byte	FF F250h	Read/Write	00h	
U2MDSL2	Byte	FF F252h	Read/Write	00h	
U2SPOS	Byte	FF F254h	Read/Write	06h	
UART3					
U3TBUF	Byte	FF F260h	Read/Write	XXh	
U3RBUF	Byte	FF F262h	Read Only	XXh	
U3ICTRL	Byte	FF F264h	Read/Write	01h	Bits 0:1 read only
U3STAT	Byte	FF F266h	Read only	00h	
U3FRS	Byte	FF F268h	Read/Write	00h	
U3MDSL	Byte	FF F26Ah	Read/Write	00h	
U3BAUD	Byte	FF F26Ch	Read/Write	00h	
U3PSR	Byte	FF F26Eh	Read/Write	00h	
U3OVR	Byte	FF F270h	Read/Write	00h	
U3MDSL2	Byte	FF F272h	Read/Write	00h	
U3SPOS	Byte	FF F274h	Read/Write	06h	
ACCESS.bus					
ACBSDA	Byte	FF F2A0h	Read/Write	XXh	
ACBST	Byte	FF F2A2h	Read/Write	00h	
ACBCST	Byte	FF F2A4h	Read/Write	00h	
ACBCTL	Byte	FF F2A6h	Read/Write	00h	
ACBADDR	Byte	FF F2A8h	Read/Write	XXh	
ACBCTL2	Byte	FF F2AAh	Read/Write	00h	
ACBADDR2	Byte	FF F2ACh	Read/Write	XXh	
ACBCTL3	Byte	FF F2AEh	Read/Write	00h	

Copyright © 2007–2013, Texas Instruments Incorporated

Table 28-1. Detailed Device Mapping (continued)

Timing and Watchdog					
TWCFG	Byte	FF FF20h	Read/Write	00h	
TWCP	Byte	FF FF22h	Read/Write	00h	
TWMT0	Word	FF FF24h	Read/Write	FFFFh	
T0CSR	Byte	FF FF26h	Read/Write	00h	
WDCNT	Byte	FF FF28h	Write Only	0Fh	
WDSDM	Byte	FF FF2Ah	Write Only	5Fh	
Multi-Function Timer					
TCNT1	Word	FF FF40h	Read/Write	XXh	
TCRA	Word	FF FF42h	Read/Write	XXh	
TCRB	Word	FF FF44h	Read/Write	XXh	
TCNT2	Word	FF FF46h	Read/Write	XXh	
TPRSC	Byte	FF FF48h	Read/Write	00h	
TCKC	Byte	FF FF4Ah	Read/Write	00h	
TCTRL	Byte	FF FF4Ch	Read/Write	00h	
TICTL	Byte	FF FF4Eh	Read/Write	00h	
TICLR	Byte	FF FF50h	Read/Write	00h	
Versatile Timer Unit					
MODE	Word	FF FF80h	Read/Write	0000h	
IO1CTL	Word	FF FF82h	Read/Write	0000h	
IO2CTL	Word	FF FF84h	Read/Write	0000h	
INTCTL	Word	FF FF86h	Read/Write	0000h	
INTPND	Word	FF FF88h	Read/Write	0000h	
CLK1PS	Word	FF FF8Ah	Read/Write	0000h	
COUNT1	Word	FF FF8Ch	Read/Write	0000h	
PERCAP1	Word	FF FF8Eh	Read/Write	0000h	
DTYCAP1	Word	FF FF90h	Read/Write	0000h	
COUNT2	Word	FF FF92h	Read/Write	0000h	
PERCAP2	Word	FF FF94h	Read/Write	0000h	
DTYCAP2	Word	FF FF96h	Read/Write	0000h	
CLK2PS	Word	FF FF98h	Read/Write	0000h	
COUNT3	Word	FF FF9Ah	Read/Write	0000h	
PERCAP3	Word	FF FF9Ch	Read/Write	0000h	
DTYCAP3	Word	FF FF9Eh	Read/Write	0000h	
COUNT4	Word	FF FFA0h	Read/Write	0000h	
PERCAP4	Word	FF FFA2h	Read/Write	0000h	
DTYCAP4	Word	FF FFA4h	Read/Write	0000h	

Copyright © 2007–2013, Texas Instruments Incorporated

Table 28-1. Detailed Device Mapping (continued)

ADC					
ADCGCR	Word	FF F3C0h	Read/Write	0000h	
ADCACR	Word	FF F3C2h	Read/Write	0000h	
ADCCNTRL	Word	FF F3C4h	Read/Write	0000h	
ADCSTART	Word	FF F3C6h	Write Only	N/A	
ADCSCDLY	Word	FF F3C8h	Read/Write	0000h	
ADCRESLT	Word	FF F3CAh	Read Only	0000h	
ADCSMBC0	Word	FF F3CEh	Read/Write	1483h	
ADCSMBC	Word	FF F3D0h	Read/Write	24E6h	
ADCSMBC2	Word	FF F3D2h	Read/Write	2508h	
ADCSMBC3	Word	FF F3D4h	Read/Write	314Ah	
ADCSMSH	Word	FF F3D6h	Read/Write	01A2h	
RNG					
RNGCST	Word	FF F280h	Read/Write	0000h	
RNGD	Word	FF F282h	Read/Write	0000h	
RNGDIVH	Word	FF F284h	Read/Write	0000h	
RNGDIVL	Word	FF F286h	Read/Write	0000h	

Copyright © 2007–2013, Texas Instruments Incorporated

29 REGISTER BIT FIELDS

The following tables show the functions of the bit fields of the device registers. For more information on using these registers, see the detailed description of the applicable function elsewhere in this data sheet.

Bluetooth LLC Registers	7	6	5	4	3	2	1	0
PLN	Reserved					PLN[2:0]		
WHITENING_ CHANNEL_ SELECTION	Reserved					CHANNEL_ SELECTION[1:0]		WHITENIN G
SINGLE_ FREQUENCY_ SELECTION	Reserved	SINGLE_FREQUENCY_SEL[6:0]						
LN_BT_CLOCK_0	LN_BT_CLOCK[7:0]							
LN_BT_CLOCK_	LN_BT_CLOCK[15:8]							
LN_BT_CLOCK_2	LN_BT_CLOCK[23:16]							
LN_BT_CLOCK_3	Reserved				LN_BT_CLOCK[27:23]			
RX_CN	Reserved	RX_CN[6:0]						
TX_CN	Reserved	TX_CN[6:0]						
AC_ACCEPTLVL[7:0]	AC_ACCEPTLVL[7:0]							
AC_ACCEPTLVL[15:8]	Reserved	CORRELATOR_DELAY					AC_ACCEPTLVL[9:8]	
LAP_ACCEPTLVL	Reserved		LAP_ACCEPTLVL[5:0]					
RFSYNCH_DELAY	Reserved		RFSYNCH_DELAY[5:0]					
SPI_READ[7:0]	SPI_READ[7:0]							
SPI_READ[15:8]	SPI_READ[15:8]							
SPI_MODE_CONFIG	Reserved			SPI_CLK_ CONF[1:0]	SPI_LEN_ CONF	SPI_DATA_ CONF3	SPI_DATA_ CONF2	SPI_DATA_ CONF1
M_COUNTER_0	M_COUNTER[7:0]							
M_COUNTER_	M_COUNTER[15:8]							
M_COUNTER_2	Reserved			M_COUNTER[20:16]				
N_COUNTER_0	N_COUNTER[7:0]							
N_COUNTER_	Reserved						N_COUNTER[9:8]	
BT_CLOCK_WR_0	BT_CLOCK_WR[7:0]							
BT_CLOCK_WR_	BT_CLOCK_WR[15:8]							
BT_CLOCK_WR_2	BT_CLOCK_WR[23:16]							
BT_CLOCK_WR_3	Reserved				BT_CLOCK_WR[27:24]			
WTPTC_1SLOT[7:0]	WTPTC_1SLOT[7:0]							
WTPTC_1SLOT[15:8]	WTPTC_1SLOT[15:8]							
WTPTC_3SLOT[7:0]	WTPTC_3SLOT[7:0]							
WTPTC_3SLOT[15:8]	WTPTC_3SLOT[15:8]							
WTPTC_5SLOT[7:0]	WTPTC_5SLOT[7:0]							
WTPTC_5SLOT[15:8]	WTPTC_5SLOT[15:8]							
SEQ_RESET	Reserved							SEQ_RESE T
SEQ_CONTINUE	Reserved							SEQ_ CONTINUE
RX_STATUS	Reserved	HEC Error	Header Error Correction	AM_ ADDR Error	Payload CRC Error	Payload Error Correction	Payload Length Error	PACKET_ DONE
CHIP_ID	Reserved				CHIP_ID			
INT_VECTOR	INT_VECTOR[7:0]							
SYSTEM_CLK_EN	Reserved				CLK_EN3	CLK_EN2	INT_SEQ_ EN	CLK_EN1
LINK_TIMER_WR_RD[7:0]	LINKTIMER_WR_RD[7:0]							
LINK_TIMER_WR_RD[15:8]	LINKTIMER_WR_RD[15:8]							

Copyright © 2007–2013, Texas Instruments Incorporated

LINK_TIMER_SELECT	Reserved		LINKTIMER_SELECT	
LINK_TIMER_STATUS_ EXP_FLAG	LINK_TIMER_STATUS_EXP_FLAG[7:0]			
LINK_TIMER_STATUS_ RD_WR_FLAG	Reserved		LINK_ TIMER_WR ITE_ DONE	LINK_ TIMER_ READ_ VALID
LINK_TIMER_ADJUST_ PLUS	LINKTIMER_ADJUST_PLUS[7:0]			
LINK_TIMER_ADJUST_ MINUS	LINKTIMER_ADJUST_MINUS[7:0]			
SLOTTIMER_WR_RD	Reserved	SLOT_TIMER_WR_RD[5:0]		

Table 29-1. USB Registers

USB Registers	7	6	5	4	3	2	1	0
MCNTRL	Reserved			HOS	NAT	HALT	Reserved	USBEN
FAR	AD_EN	AD						
NFSR	Reserved						NSF	
MAEV	INTR	RX_EV	ULD	NAK	FRAME	TX_EV	ALT	WARN
MAMSK	INTR	RX_EV	ULD	NAK	FRAME	TX_EV	ALT	WARN
ALTEV	RESUME	RESET	SD5	SD3	EOP	DMA	CLKSTB	Reserved
ALTMSK	RESUME	RESET	SD5	SD3	EOP	DMA	CLKSTB	Reserved
TXEV	TXUDRRUN				TXFIFO			
TXMSK	TXUDRRUN				TXFIFO			
RXEV	RXOVRRUN				RXFIFO			
RXMSK	RXOVRRUN				RXFIFO			
NAKEV	OUT				IN			
NAKMSK	OUT				IN			
FWEV	RXWARN[3:1]			Reserved	TXWARN[3:1]			Reserved
FWMSK	RXWARN[3:1]			Reserved	TXWARN[3:1]			Reserved
FNH	MF	UL	RFC	Reserved		FN[10:8]		
FNL	FN[7:0]							
DMACNTRL	DEN	IGNRXTGL	DTGL	ADMA	DMOD	DSRC		
DMAEV	Reserved		NTGL	ARDY	DSIZ	DCNT	DERR	DSHLT
DMAMSK	Reserved				DSIZ	DCNT	DERR	DSHLT
MIR	STAT							
DMACNT	DCOUNT							
DMAERR	AEH	DMAERRCNT						
EPC0	STALL	DEF	Reserved		EP			
TXD0	TXFD							
TXS0	Reserved	ACK_STAT	TX_DONE	TCOUNT				
TXC0	Red			IGN_IN	FLUSH	TOGGLE	Reserved	TX_EN
RXD0	RXFD							
RXS0	Res.	SETUP	TOGGLE	RX_LAST	RCOUNT			
RXC0	Reserved				FLUSH	IGN_ SETUP	IGN_OUT	RX_EN
EPC1	STALL	Reserved	ISO	EP_EN	EP			
TXD1	TXFD							
TXS1	TX_URUN	ACK_STAT	TX_DONE	TCOUNT				
TXC1	IGN_ ISOMSK	TFWL		RFF	FLUSH	TOGGLE	LAST	TX_EN
EPC2	STALL	Reserved	ISO	EP_EN	EP			

Table 29-1. USB Registers (continued)

RXD1	RXFD							
RXS1	RX_ERR	SETUP	TOGGLE	RX_LAST	RCOUNT			
RXC1	Reserved	RFWL		Res.	FLUSH	IGN_ SETUP	Reserved	RX_EN
EPC3	STALL	Reserved	ISO	EP_EN	EP			
TXD2	TXFD							
TXS2	TX_URUN	ACK_STAT	TX_DONE	TCOUNT				
TXC2	IGN_ ISOMSK	TFWL		RFF	FLUSH	TOGGLE	LAST	TX_EN
EPC4	STALL	Reserved	ISO	EP_EN	EP			
RXD2	RXFD							
RXS2	RX_ERR	SETUP	TOGGLE	RX_LAST	RCOUNT			
RXC2	Reserved	RFWL		Reserved	FLUSH	IGN_ SETUP	Reserved	RX_EN
EPC5	STALL	Reserved	ISO	EP_EN	EP			
TXD3	TXFD							
TXS3	TX_URUN	ACK_STAT	TX_DONE	TCOUNT				
TXC3	IGN_ ISOMSK	TFWL		RFF	FLUSH	TOGGLE	LAST	TX_EN
EPC6	STALL	Reserved	ISO	EP_EN	EP			
RXD3	RXFD							
RXS3	RX_ERR	SETUP	TOGGLE	RX_LAST	RCOUNT			
RXC3	Reserved	RFWL[1:0]		Reserved	FLUSH	IGN_ SETUP	Reserved	RX_EN

Table 29-2. CAN Control/ Status

CAN Control/ Status	**15**	**14**	**13**	**12**	**11**	**10**	**9**	**8**	**7**	**6**	**5**	**4**	**3**	**2**	**1**	**0**
CGCR	Reserved				EIT	DIAG EN	INTE RNAL	LOOP BACK	IGN ACK	LO	DD IR	TST PEN	BUFF LOCK	CRX	CTX	CAN EN
CTIM	PSC[6:0]							SJW[1:0]		TSEG1[3:0]				TSEG2[2:0]		
GMSKB	GM[28:18]											RTR	IDE	GM[17:15]		
GMSKX	GM[14:0]															XRTR
BMSKB	BM[28:18]											RTR	IDE	BM[17:15]		
BMSKX	BM[14:0]															XRTR
CIEN	EI EN	IEN[14:0]														
CIPND	EI PND	IPND[14:0]														
CICLR	EI CLR	ICLR[14:0]														
CICEN	EI CEN	ICEN[14:0]														
CSTPND	Reserved								NS[2:0]			IRQ	IST[3:0]			
CANEC	REC[7:0]								TEC[7:0]							
CEDIAG	Res.	DRI VE	MON	CRC	STU FF	TXE	EBID[5:0]						EFID[3:0]			
CTMR	CTMR[15:0]															

Copyright © 2007–2013, Texas Instruments Incorporated

Table 29-3. CAN Memory Registers

CAN Memory Registers	15	14	13	12	11	10	9	8	7	6	5	4	3	2	1	0
CMBn.ID1	ID10 XI28	ID9 XI27	ID8 XI26	ID7 XI25	ID6 XI24	ID5 XI23	ID4 XI22	ID3 XI21	ID2 XI20	ID1 XI19	ID0 XI18	SRR RTR	IDE	XI17	XI16	XI15
CMBn.ID0	XI14	XI13	XI12	XI11	XI10	XI9	XI8	XI7	XI6	XI5	XI4	XI3	XI2	XI1	XI0	RTR
CMBn.DATA 0	Data 1.7	Data 1.6	Data 1.5	Data 1.4	Data 1.3	Data 1.2	Data 1.1	Data 1	Data 2.7	Data 2.6	Data 2.5	Data 2.4	Data 2.3	Data 2.2	Data 2.1	Data 2
CMBn.DATA 1	Data 3.7	Data 3.6	Data 3.5	Data 3.4	Data 3.3	Data 3.2	Data 3.1	Data 3	Data 4.7	Data 4.6	Data 4.5	Data 4.4	Data 4.3	Data 4.2	Data 4.1	Data 4
CMBn.DATA 2	Data 5.7	Data 5.6	Data 5.5	Data 5.4	Data 5.3	Data 5.2	Data 5.1	Data 5	Data 6.7	Data 6.6	Data 6.5	Data 6.4	Data 6.3	Data 6.2	Data 6.1	Data 6
CMBn.DATA 3	Data 7.7	Data 7.6	Data 7.5	Data 7.4	Data 7.3	Data 7.2	Data 7.1	Data 7	Data 8.7	Data 8.6	Data 8.5	Data 8.4	Data 8.3	Data 8.2	Data 8.1	Data 8
CMBn.TSTP	TSTP 15	TSTP 14	TSTP 13	TSTP 12	TSTP 11	TSTP 10	TSTP 9	TSTP 8	TSTP 7	TSTP 6	TSTP 5	TSTP 4	TSTP 3	TSTP 2	TSTP 1	TSTP 0
CMBn. CNTSTAT	DLC3	DLC2	DLC1	DLC0	Reserved				PRI3	PRI2	PRI1	PRI0	ST3	ST2	ST1	ST0

Table 29-4. DMAC Registers

DMAC Registers	20..16	15	14	13	12	11	10	9	8	7	6	5	4	3	2	1	0
ADCA	Device A Address Counter																
ADRA	Device A Address																
ADCB	Device B Address Counter																
ADRB	Device B Address																
BLTC	N/A	Block Length Counter															
BLTR	N/A	Block Length															
DMACNTL	N/A	Res.	INCB		ADB	INCA		ADA	SW RQ	Res.	OT	DIR	IND	TCS	EO VR	ETC	CH EN
DMASTAT	N/A									Reserved				VLD	CH AC	OVR	TC

Table 29-5. System Configuration Registers

System Configuration Registers	7	6	5	4	3	2	1	0
MCFG	Reserved	MEM_IO_ SPEED	MISC_IO_ SPEED	USB_ ENABLE	SCLKOE	MCLKOE	PLLCLKOE	EXIOE
DBGCFG	Reserved						FREEZE	ON
MSTAT	ISPRST	WDRST	Reserved	DPGM BUSY	PGMBUSY	OENV2	OENV	OENV0

Table 29-6. BIU Registers

BIU Registers	15 12	11	10	9	8	7	6	5	4	3	2	1	0
BCFG	Reserved												EWR
IOCFG	Reserved			IPST	Res.	BW	Reserved		HOLD		WAIT		
SZCFG0	Reserved	FRE	IPRE	IPST	Res.	BW	WBR	RBE	HOLD		WAIT		
SZCFG	Reserved	FRE	IPRE	IPST	Res.	BW	WBR	RBE	HOLD		WAIT		
SZCFG2	Reserved	FRE	IPRE	IPST	Res.	BW	WBR	RBE	HOLD		WAIT		

Copyright © 2007–2013, Texas Instruments Incorporated

Table 29-7. TBI Register

TBI Register	7	6	5	4	3	2	1	0
TMODE	Reserved			TSTEN	ENMEM		TMSEL	

Table 29-8. Flash Program Memory Interface Registers

Flash Program Memory Interface Registers	15	14	13	12	11	10	9	8	7	6	5	4	3	2	1	0
FMIBAR	Reserved								IBA							
FMIBDR	IBD															
FM0WER	FM0WE															
FM1WER	FM1WE															
FM2WER	FM2WE															
FM3WER	FM3WE															
FMCTRL	Reserved								MER	PER	PE	IENP ROG	DIS VRF	Res.	CWD	LOW PRW
FMSTAT	Reserved											DE RR	FM FULL	FM BUSY	PERR	EERR
FMPSR	Reserved											FTDIV				
FMSTART	Reserved								FTSTART							
FMTRAN	Reserved								FTTRAN							

Table 29-9. Flash Program Memory Interface Registers

Flash Program Memory Interface Registers	15	14	13	12	11	10	9	8	7	6	5	4	3	2	1	0
FMPROG	Reserved								FTPROG							
FMPERASE	Reserved								FTPER							
FMMERASE0	Reserved								FTMER							
FMEND	Reserved								FTEND							
FMMEND	Reserved								FTMEND							
FMRCV	Reserved								FTRCV							
FMAR0	Reserved															USB_EN-ABLE
FMAR	WRPROT			RDPROT			ISPE			EMPTY			BOOTAREA			
FMAR2	CADR15:0															

Table 29-10. Flash Data Memory Interface Registers

Flash Data Memory Interface Registers	15	14	13	12	11	10	9	8	7	6	5	4	3	2	1	0
FSMIBAR	Reserved								IBA							
FSMIBDR	IBD															
FSM0WER	FM0WE															
FSM1WER	FM1WE															
FSM2WER	FM2WE															
FSM3WER	FM3WE															

Copyright © 2007–2013, Texas Instruments Incorporated

Table 29-10. Flash Data Memory Interface Registers (continued)

FSMCTRL	Reserved			MER	PER	PE	IENPROG	DISVRF	Res.	CWD	LOWPRW
FSMSTAT	Reserved						DERR	FMFULL	FMBUSY	PERR	EERR
FSMPSR	Reserved							FTDIV			
FSMSTART	Reserved			FTSTART							
FSMTRAN	Reserved			FTTRAN							
FSMPROG	Reserved			FTPROG							
FSMPERASE	Reserved			FTPER							
FSMMERASE0	Reserved			FTMER							
FSMEND	Reserved			FTEND							
FSMMEND	Reserved			FTMEND							
FSMRCV	Reserved			FTRCV							

Table 29-11. Flash Data Memory Interface Registers

Flash Data Memory Interface Registers	**15**	**14**	**13**	**12**	**11**	**10**	**9**	**8**	**7**	**6**	**5**	**4**	**3**	**2**	**1**	**0**
FSMAR0	Reserved															USB_EN-ABLE
FSMAR	WRPROT			RDPROT			ISPE			EMPTY			BOOTAREA			
FSMAR2	CADR15:0															

Table 29-12. CVSD/PCM Registers

CVSD/PCM Registers	**15**	**14**	**13**	**12**	**11**	**10**	**9**	**8**	**7**	**6**	**5**	**4**	**3**	**2**	**1**	**0**
CVSDIN	CVSDIN															
CVSDOUT	CVSDOUT															
PCMIN	PCMIN															
PCMOUT	PCMOUT															
LOGIN	Reserved								LOGIN							
LOGOUT	Reserved								LOGOUT							
LINEARIN	LINEARIN															
LINEAROUT	LINEAROUT															
CVCTRL	Reserved				PCMCONV	CVSD CONV		DMAPI	DMAPO	DMACI	DMACO	CVSDERRINT	CVSDINT	PCMINT	CLKEN	CVEN
CVSTAT	Reserved					CVOUTST			CVINST			CVF	CVE	PCMINT	CVNF	CVNE
CVTEST	Reserved											TEST_VAL	ENC_IN	DEC_EN	RT	TB
CVRADD	Reserved									CVRADD						
CVRDAT	CVRDAT															
CVDECOUT	CVDECOUT															
CVENCIN	CVENCIN															
CVENCPR	CVENCPRT															

Table 29-13. CLK3RES Registers

CLK3RES Registers	7	6	5	4	3	2	1	0
CRCTRL	Reserved		POR	ACE2	ACE	PLLPWD	FCLK	SCLK
PRSFC	Reserved	MODE			FCDIV			
PRSSC	SCDIV							
PRSAC	ACDIV2				ACDIV1			

Table 29-14. PMM Register

PMM Register	7	6	5	4	3	2	1	0
PMMCR	HCCH	HCCM	DHC	DMC	WBPSM	HALT	IDLE	PSM
PMMSR	Reserved					OHC	OMC	OLC

Table 29-15. MIWU16 Registers

MIWU16 Registers	15	14	13	12	11	10	9	8	7	6	5	4	3	2	1	0
WKEDG	WKED															
WKENA	WKEN															
WKICTL	WKINTR7		WKINTR6		WKINTR5		WKINTR4		WKINTR3		WKINTR2		WKINTR1		WKINTR0	
WKICTL2	WKINTR15		WKINTR14		WKINTR13		WKINTR12		WKINTR11		WKINTR10		WKINTR9		WKINTR8	
WKPND	WKPD															
WKPCL	WKCL															
WKIENA	WKIEN															

Table 29-16. GPIO Registers

GPIO Registers	7	6	5	4	3	2	1	0
PxALT	Px Pins Alternate Function Enable							
PxDIR	Px Port Direction							
PxDIN	Px Port Output Data							
PxDOUT	Px Port Input Data							
PxWPU	Px Port Weak Pull-Up Enable							
PxHDRV	Px Port High Drive Strength Enable							
PxALTS	Px Pins Alternate Function Source Selection							

Table 29-17. AAI Registers

AAI Registers	15	14	13	12	11	10	9	8	7	6	5	4	3	2	1	0
ARSR	ARSH								ARSL							
ATSR	ATSH								ATSL							
ARFR	ARFH								ARFL							
ARDR0	ARDH								ARDL							
ARDR	ARDH								ARDL							
ARDR2	ARDH								ARDL							
ARDR3	ARDH								ARDL							
ATFR	ATFH								ATFL							
ATDR0	ATDH								ATDL							

Copyright © 2007–2013, Texas Instruments Incorporated

Table 29-18. AAI Registers

AAI Registers	15	14	13	12	11	10	9	8	7	6	5	4	3	2	1	0
ATDR1	ATDH								ATDL							
ATDR2	ATDH								ATDL							
ATDR3	ATDH								ATDL							
AGCR	CLK EN	AAI EN	IOM2	IFS	FSL		CTF	CRF	IEBC	FSS	IEFS	SCS		LPB	DWL	ASS
AISCR	Reserved				TX EIC	TX IC	RX EIC	RX IC	TX EIP	TX IP	RX EIP	RX IP	TX EIE	TX IE	RX EIE	RX IE
ARSCR	RXFWM				RXDSA				RXSA				RXO	RXE	RXF	RX AF
ATSCR	TXFWM				TXDSA				TXSA				TXU	TXF	TXE	TXAE
ACCR	BCPRS								FCPRS							CSS
ADMACR	Reserved			ACO		ACD			TMD				RMD			

Table 29-19. ICU Registers

ICU Registers	15 ... 12	11 ... 8	7	6	5	4	3	2	1	0
IVCT	Reserved		0	0	INTVECT[5:0]					
ISTAT0	IST(15:0)									
ISTAT	IST(31:16)									
IENAM0	IENA(15:0)									
IENAM	IENA(31:16)									

Table 29-20. UART Registers

UART Registers	7	6	5	4	3	2	1	0
UnTBUF	UnTBUF							
UnRBUF	URBUF							
UnICTRL	UEEI	UERI	UETI	UEFCI	UCTS	UDCTS	URBF	UTBE
UnSTAT	Reserved	UXMIP	URB9	UBKD	UERR	UDOE	UFE	UPE
UnFRS	Reserved	UPEN	UPSEL		UXB9	USTP	UCHAR	
UnMDSL	URTS	UFCE	UERD	UETD	UCKS	UBRK	UATN	UMOD
UnBAUD	UDIV7:0							
UnPSR	UPSC					UDIV10:8		
UnOVR	Reserved				UOVSR			
UnMDSL2	Reserved							USMD
UnSPOS	Reserved				USAMP			

Table 29-21. MWSPI16

MWSPI16 Registers	15 . . . 9	8	7	6	5	4	3	2	1	0
MWDAT	MWDAT									
MWCTL	SCDV	SCIDL	SCM	EIW	EIR	EIO	ECHO	MOD	MNS	MWEN
MWSTAT	Reserved							OVR	RBF	BSY

Table 29-22. ACB Registers

ACB Registers	7	6	5	4	3	2	1	0
ACBSDA	DATA							
ACBST	SLVSTP	SDAST	BER	NEGACK	STASTR	NMATCH	MASTER	XMIT
ACBCST	ARPMATCH	MATCHAF	TGSCL	TSDA	GMATCH	MATCH	BB	BUSY
ACBCTL	STASTRE	NMINTE	GCMEN	ACK	Reserved	INTEN	STOP	START
ACBADDR	SAEN	ADDR						
ACBCTL2	SCLFRQ[6:0]							ENABLE
ACBADDR2	SAEN	ADDR						
ACBCTL3	Reserved					ARPEN	SCLFRQ[8:7]	

Table 29-23. TWM Registers

TWM Registers	15 . . . 8	7	6	5	4	3	2	1	0
TWCFG	Reserved	Reserved		WDSDME	WDCT0I	LWDCNT	LTWMT0	LTWCP	LTWCFG
TWCP	Reserved	Reserved					MDIV		
TWMT0	PRESET								
T0CSR	Reserved	Reserved			FRZT0E	WDTLD	T0INTE	TC	RST
WDCNT	Reserved	PRESET							
WDSDM	Reserved	RSTDATA							

Table 29-24. MFT16 Registers

MFT16 Registers	15 . . . 8	7	6	5	4	3	2	1	0
TCNT	TCNT1								
TCRA	TCRA								
TCRB	TCRB								
TCNT2	TCNT2								
TPRSC	Reserved	Reserved			CLKPS				
TCKC	Reserved	Reserved		C2CSEL			C1CSEL		
TCTRL	Reserved	TEN	TAOUT	TBEN	TAEN	TBEDG	TAEDG	TMDSEL	
TICTL	Reserved	TDIEN	TCIEN	TBIEN	TAIEN	TDPND	TCPND	TBPND	TAPND
TICLR	Reserved	Reserved				TDCLR	TCCLR	TBCLR	TACLR

Table 29-25. VTU Registers

VTU Registers	15	14	13	12	11	10	9	8	7	6	5	4	3	2	1	0
MODE	TMOD4		T8 RUN	T7 RUN	TMOD3		T6 RUN	T5 RUN	TMOD2		T4 RUN	T3 RUN	TMOD1		T2 RUN	T1 RUN
IO1CTL	P4 POL	C4EDG			P3 POL	C3EDG			P2 POL	C2EDG			P1 POL	C1EDG		
IO2CTL	P7 POL	C7EDG			P6 POL	C6EDG			P5 POL	C5EDG			P5 POL	C5EDG		
INTCTL	I4DEN	I4CEN	I4BEN	I4AEN	I3DEN	I3CEN	I3BEN	I3AEN	I2DEN	I2CEN	I2BEN	I2AEN	I1DEN	I1CEN	I1BEN	I1AEN
INTPND	I4DPD	I4CPD	I4BPD	I4APD	I3DPD	I3CPD	I3BPD	I3APD	I2DPD	I2CPD	I2BPD	I2APD	I1DPD	I1CPD	I1BPD	I1APD
CLK1PS	C2PRSC								C1PRSC							
COUNT	CNT1															

Copyright © 2007–2013, Texas Instruments Incorporated

Table 29-25. VTU Registers (continued)

PERCAP	PCAP1	
DTYCAP	DCAP1	
COUNT2	CNT2	
PERCAP2	PCAP2	
DTYCAP2	DCAP2	
CLK2PS	C4PRSC	C3PRSC
COUNT3	CNT3	
PERCAP3	PCAP3	
DTYCAP3	DCAP3	
COUNT4	CNT4	
PERCAP4	PCAP4	
DTYCAP4	DCAP4	

Table 29-26. ADC Registers

ADC Registers	**15**	**14**	**13**	**12**	**11**	**10**	**9**	**8**	**7**	**6**	**5**	**4**	**3**	**2**	**1**	**0**
ADCGCR	MUXOUTEN	INTEN	Res.	NREF_CFG		PREF_CFG		TOUCH_CFG			MUX_CFG			DIFF	ADCIN	CLKEN
ADCACR	CNVT	TRG	PRM	Reserved										CLKDIV		CLKSEL
ADCCNTRL	Reserved													AUTO	EXT	POL
ADCSTART	Write any value.															
ADCSCDLY	ADC_DIV		ADC_DELAY									ADC_DELAY2				
ADCRESLT	ADC_DONE	ADC_OFLW	PEN_DOWN	SIGN	ADC_RESULT											

Table 29-27. RNG Registers

RNG Registers	**15**	**14**	**13**	**12**	**11**	**10**	**9**	**8**	**7**	**6**	**5**	**4**	**3**	**2**	**1**	**0**
RNGCST	Reserved										IMSK	Reserved			DVALID	RNGE
RNGD	RNGD															
RNGDIVH	Reserved														RNGDIV17:16	
RNGDIVL	RNGDIV15:0															

30 ELECTRICAL CHARACTERISTICS

30.1 ABSOLUTE MAXIMUM RATINGS(1)(2)

Over operating free-air temperature range (unless otherwise noted)

	VALUE	UNIT
Supply voltage (VCC)	3.6	V
All input and output voltages with respect to GND*	-0.5 to IOVCC + 0.5	V
ESD protection level (Human Body Model)	2	kV
Allowable sink/source current per signal pin	±10	mA
Total current into IOVCC pins	200	mA
Total current into VCC pins (source)	200	mA
Total current out of GND pins (sink)	200	mA
Latch-up immunity	±200	mA
Storage temperature range	-65° to +150°	C

(1) If Military/Aerospace specified devices are required, please contact the Texas Instruments Sales Office/Distributors for availability and specifications.
(2) Absolute maximum ratings indicate limits beyond which damage to the device may occur. DC and AC electrical specifications are not ensured when operating the device at absolute maximum ratings. *The latch-up tolerance on ACCESS.bus pins exceeds 150 mA.

30.2 DC ELECTRICAL CHARACTERISTICS

(Temperature: -40°C M TA M +85°C)

Symbol	Parameter	Conditions	Min	Max	Units
Vcc	Digital Logic Supply Voltage		2.25	2.75	V
IOVcc	I/O Supply Voltage		2.25	3.63	V
AVcc	Analog PLL Supply Voltage		2.25	2.75	V
ADVcc	ADC Supply Voltage		2.25	2.75	V
UVcc	USB Supply Voltage		3	3.63	V
VIL	Logical 0 Input Voltage (except X1CKI, X2CKI, and $\overline{\text{RESET}}$)		-0.5(1)	0.3 Vcc(1)	V
VIH	Logical 1 Input Voltage (except X1CKI, X2CKI, and $\overline{\text{RESET}}$)		0.7 IOVcc	IOVcc + 0.5(1)	V
Vxl1	X1CKI Logical 0 Input Voltage	External X1 clock	-0.5(2)	0.3 Vcc	V
Vxh1	X1CKI Logical 1 Input Voltage	External X1 clock	0.7 Vcc	Vcc + 0.5	V
Vxl2	X2CKI Logical 0 Input Voltage	External X2 clock	-0.5(1)	0.6	V
Vxh2	X2CKI Logical 1 Input Voltage	External X2 clock	0.7 Vcc	Vcc + 0.5	V
Vrstl	RESET Logical 0 Input Voltage	RESET input	-0.5	0.4	V
V_{rsth}	RESET Logical 1 Input Voltage	RESET input	1.7		V
V_{hys}	Hysteresis Loop Width(1)		0.1 IOVcc		V
I_{OH}	Logical 1 Output Current	VOH = 1.8V, IOVcc = 2.25V	-6		mA
I_{OL}	Logical 0 Output Current	VOL = 0.45V, IOVcc = 2.25V	6		mA
IOLACB	SDA, SCL Logical 0 Output Current	VOL = 0.4V, IOVcc = 2.25V	3		mA
I_{OLTS}	Touchscreen Logical 0 Output Current(2) (for ADC2/TSX- and ADC3/TSY-)	VOL = 0.15V, ADVcc = 2.25V	18		mA

(1) Specified by design.
(2) Characterized not tested in production.

Copyright © 2007–2013, Texas Instruments Incorporated

Symbol	Parameter	Conditions	Min	Max	Units
I_{OHTS}	Touchscreen Logical 1 Output Current (for ADC0/TSX+ and ADC1/TSY+)	VOH = 2.1, ADVcc = 2.25V	-18		mA
I_{OHW}	Weak Pull-up Current	VIL = 0V, IOVcc = 3.63V	-20	-300	µA
I_L	High Impedance Input Leakage Current (2) (except ADC0/TSX+, ADC1/TSY+, ADC2/TSX-, ADC3/TSY-)	0V ≤ Vin ≤ IOVcc	-2	2	µA
I_L	High Impedance Input Leakage Current (for ADC0/TSX+, ADC1/TSY+, ADC2/TSX-, ADC3/TSY-)	0V ≤ Vin ≤ IOVcc	-5	5	µA
IO(Off)	Output Leakage Current (I/O pins in input mode)	0V ≤ Vout ≤ Vcc	-2	2	µA
I_{cca}	Digital Supply Current Active Mode (3)	Vcc = 2.75V, IOVcc=3.63V		20	mA
I_{ccprog}	Digital Supply Current Active Mode (4)	Vcc = 2.75V, IOVcc = 3.63V		20	mA
I_{ccps}	Digital Supply Current Power Save Mode (5)	Vcc = 2.75V, IOVcc =3.63V		4	mA
I_{ccid}	Digital Supply Current Idle Mode (6)	Vcc = 2.75V, IOVcc = 3.63V		2	mA
I_{ccq}	Digital Supply Current Halt Mode (6) (7)	Vcc = 2.75V, IOVcc = 3.63V, 20°C		150	µA

(1) Characterized not tested in production.
(2) Some pins not tested for leakage due to I/O structure.
(3) Run from internal memory (RAM), I_{out} = 0 mA, X1CKI = 12 MHz, PLL enabled (4×), internal system clock is 24 MHz, not programming Flash memory.
(4) Same conditions as Icca1, but programming or erasing Flash memory page.
(5) Running from internal memory (RAM), I_{out} = 0 mA, XCKI1 = 12 MHz, PLL disabled, X2CKI = 32.768 kHz, device put in power-save mode, Slow Clock derived from XCKI1.
(6) I_{out} = 0 mA, XCKI1 = Vcc, X2CKI = 32.768 kHz.
(7) Halt current approximately doubles for every 20°C.

30.3 USB TRANSCEIVER ELECTRICAL CHARACTERISTICS

(Temperature: -40°C M TA M +85°C)

(Characterized not tested in production.)

Symbol	Parameter	Conditions	Min	Max	Units
V_{DI}	Differential Input Sensitivity	(D+) - (D-)	-0.2	0.2	V
V_{CM}	Differential Common Mode Range		0.8	2.5	V
V_{SE}	Single-Ended Receiver Threshold		0.8	2	V
V_{OL}	Output Low Voltage	RL = 1.5 kohm to 3.6V		0.3	V
V_{OH}	Output High Voltage		2.8		V
V_{OZ}	TRI-STATE Data Line Leakage	0V < VIN < 3.3V	-10	10	µA
C_{TRN}	Transceiver Capacitance			20	pF

30.4 ADC ELECTRICAL CHARACTERISTICS

(Temperature: -40°C M TA M +85°C)

Symbol	Parameter	Conditions	Min	Typ	Max	Units
V_{PREF}	ADC Positive Reference Input (1)		2		2.75	V
V_{NREF}	ADC Negative Reference Input (1)		0		0.25	V
	ADC Input Range (1)		V_{NREF}		V_{PREF}	V
	Clock Frequency			12		MHz
t_C	Conversion Time (12-bit result)			14		µs

(1) Guaranteed by design.

Copyright © 2007–2013, Texas Instruments Incorporated

Symbol	Parameter	Conditions	Min	Typ	Max	Units
INL	Integral Non-Linearity				±2	LSB
DNL	Differential Non-Linearity				±0.7	LSB
C_{ADCIN}	Total Capacitance of ADC Input (1)		9		20	pF
C_{ADCINS}	Switched Capacitance of ADC Input (1)		8		10	pF
R_{ADCIN}	Resistance of ADC Input Path (1)		0.1		12	kohm
C_{ADCIN}	Total Capacitance of ADC Reference Input (1)		50		100	pF
C_{ADCINS}	Switched Capacitance of ADC Reference Input (1)		8		10	pF
R_{ADCIN}	Resistance of ADC Reference Input Path (1)		0.2		0.6	kohm

(1) Guaranteed by design.

30.5 FLASH MEMORY ON-CHIP PROGRAMMING

(Specified by design.)

Symbol	Parameter	Conditions	Min	Max	Units
t_{START}	Program/Erase to NVSTR Setup Time (NVSTR = Non-Volatile Storage		5	-	µs
t_{TRAN}	NVSTR to Program Setup Time		10	-	µs
t_{PROG}	Programming Pulse Width		20	40	µs
t_{PERASE}	Page Erase Pulse Width		20	-	ms
t_{MERASE}	Module Erase Pulse Width		200	-	ms
t_{END}	NVSTR Hold Time		5	-	µs
t_{MEND}	NVSTR Hold Time (Module Erase)		100	-	µs
t_{RCV}	Recovery Time		1	-	µs
t_{HV}	Cumulative Program High Voltage Period For Each Row After Erase	128K program blocks	-	8	ms
t_{HV}		8K data block	-	4	ms
	Write/Erase Endurance		20,000	-	cycles
	Data Retention	25°C	100	-	years

Copyright © 2007–2013, Texas Instruments Incorporated

30.6 OUTPUT SIGNAL LEVELS

All output signals are powered by the digital supply (VCC).

Table 30-1 summarizes the states of the output signals during the reset state (when VCC power exists in the reset state) and during the Power Save mode.

The $\overline{\text{RESET}}$ and $\overline{\text{NMI}}$ input pins are active during the Power Save mode. In order to guarantee that the Power Save current not exceed 1 mA, these inputs must be driven to a voltage lower than 0.5V or higher than VCC - 0.5V. An input voltage between 0.5V and (VCC - 0.5V) may result in power consumption exceeding 1 mA.

Table 30-1. Output Pins During Reset and Power-Save

Signals on a Pin	Reset State (with Vcc)	Power Save Mode	Comments
PB7:0	TRI-STATE	Previous state	I/O ports will maintain their values when entering power-save mode.
PC7:0	TRI-STATE	Previous state	
PE5:0	TRI-STATE	Previous state	
PF7:0	TRI-STATE	Previous state	
PG7:0	TRI-STATE	Previous state	
PH7:0	TRI-STATE	Previous state	
PJ7:0	TRI-STATE	Previous state	

30.7 CLOCK AND RESET TIMING

(Guaranteed by design. All timing except memory interface characterized not tested for production.)

Table 30-2. Clock and Reset Signals

Symbol	Figure	Description			Reference	Min (ns)	Max (ns)
Reset and NMI Input Signals							
tX_{1p}	Figure 30-1	X1 period			Rising Edge (RE) on X1 to next RE on X1	83.33	83.33
tX_{1h}	Figure 30-1	X1 high time, external clock			At 2V level (Both Edges)	(0.5 Tclk) - 5	
tX_{1l}	Figure 30-1	X1 low time, external clock			At 0.8V level (Both Edges)	(0.5 Tclk) - 5	
tX_{2p}	Figure 30-1	X2 period (1)			RE on X2 to next RE on X2	10,000	
tX_{2h}	Figure 30-1	X2 high time, external clock			At 2V level (both edges)	(0.5 Tclk) - 500	
tX_{2l}	Figure 30-1	X2 low time, external clock			At 0.8V level (both edges)	(0.5 Tclk) - 500	
t_{IH}	Figure 30-2	Input hold time (NMI, RXD1, RXD2)			After RE on CLK	0	
Reset and NMI Input Signals							
t_{IW}	Figure 30-2	$\overline{\text{NM}}$ Pulse Width			$\overline{\text{NMI}}$ Falling Edge (FE) to RE	20	
t_{RST}	Figure 30-3	$\overline{\text{RESET}}$ Pulse Width			RESETFE to RE	100	
t_R	Figure 30-4	Vcc Rise Time			0.1 Vcc to 0.9 Vcc		

(1) Only when operating with an external square wave on X2CKI; otherwise a 32 kHz crystal network must be used between X2CKI and X2CKO. If Slow Clock is internally generated from Main Clock, it may not exceed this given limit.

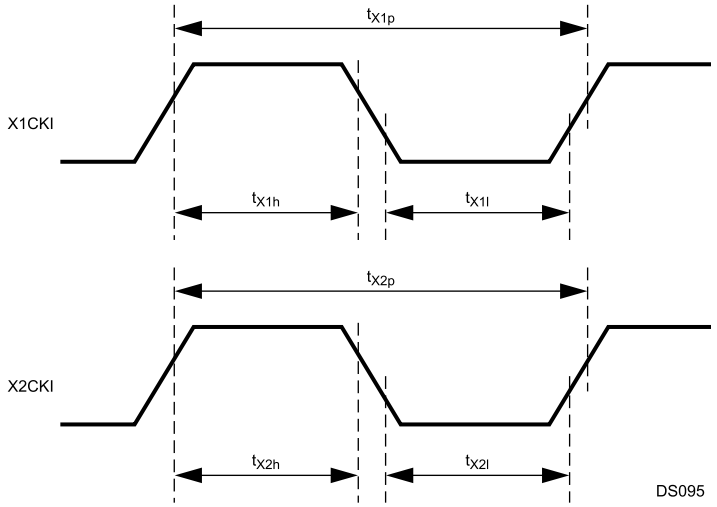

Figure 30-1. Clock Timing

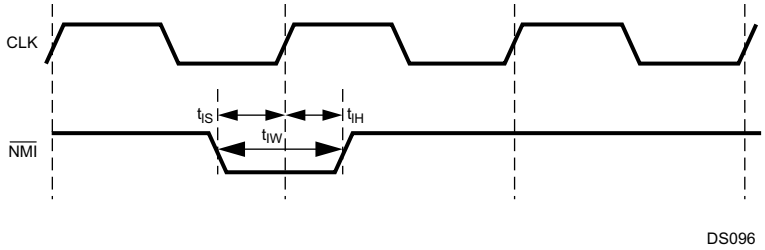

Figure 30-2. $\overline{\text{NMI}}$ Signal Timing

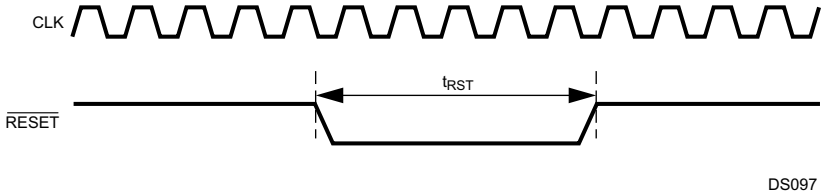

Figure 30-3. Non-Power-On Reset

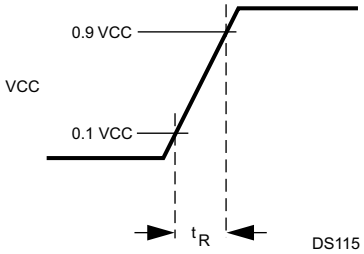

Figure 30-4. Power-On Reset

Copyright © 2007–2013, Texas Instruments Incorporated

30.8 UART TIMING

Table 30-3. UART Signals

Symbol	Figure	Description	Reference	Min (ns)	Max (ns)
UART Input Signals					
tCKX	Figure 30-5	CKX period (synchronous mode)		250	-
tRXS	Figure 30-5	RXD setup time (synchronous mode)	Before Falling Edge (FE) on CKX	40	-
tRXH	Figure 30-5	RXD hold time (synchronous mode)	Before FE on CKX	40	-
UART Output Signals					
tTXD	Figure 30-5	TXD output valid (synchronous mode)	After Rising Edge (RE) on CKX	-	40

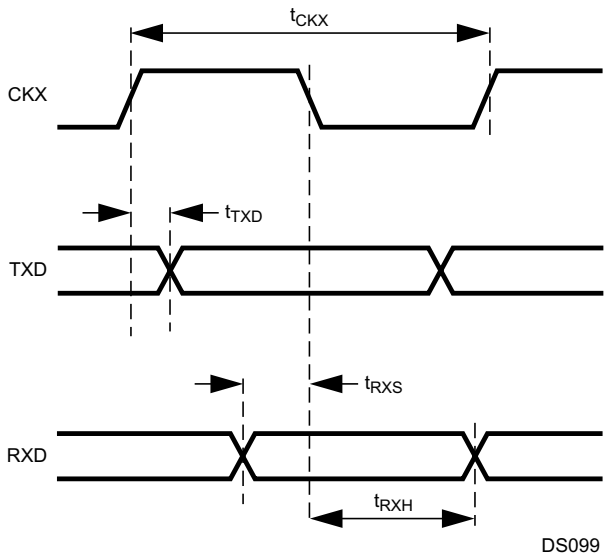

Figure 30-5. UART Synchronous Mode Timing

30.9 I/O PORT TIMING

Table 30-4. I/O Port Signals

Symbol	Figure	Description	Reference	Min (ns)	Max (ns)
I/O Port Input Signals					
t_{IS}	Figure 30-6	Input Setup Time	Before Falling Edge (FE) on System Clock	22.5	-
t_{IH}	Figure 30-6	Input Hold Time	After FE on System Clock	0	-
I/O Port Output Signals					
t_{COv1}	Figure 30-6	Output Valid Time	After FE on System Clock	-	3

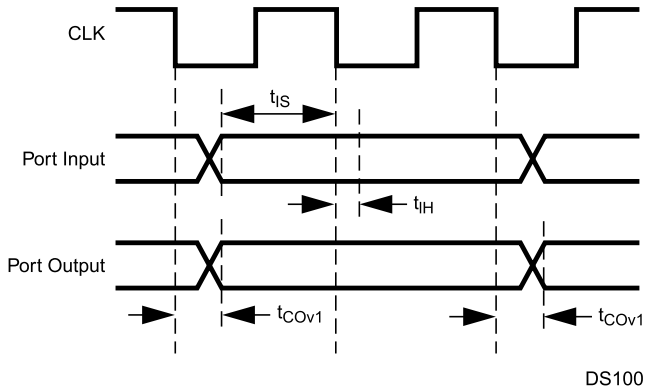

Figure 30-6. I/O Port Timing

Copyright © 2007–2013, Texas Instruments Incorporated

30.10 ADVANCED AUDIO INTERFACE (AAI) TIMING

Table 30-5. Advanced Audio Interface (AAI) Signals

Symbol	Figure	Description	Reference	Min (ns)	Max (ns)
AAI Input Signals					
t_{RDS}	Figure 30-7, Figure 30-9	Receive Data Setup Time	Before Falling Edge (FE) on SRCLK	20	-
t_{RDH}	Figure 30-7, Figure 30-9	Receive Data Hold Time	After FE on SRCLK	20	-
t_{FSS}	Figure 30-7	Frame Sync Setup Time	Before Rising Edge (RE) on SRCLK	20	-
t_{FSH}	Figure 30-7	Frame Sync Hold Time	After RE on SRCLK	20	-
AAI Output Signals					
t_{CP}	Figure 30-7	Receive/Transmit Clock Period	RE on SRCLK/SCK to RE on SRCLK/SCK	976.6	-
t_{CL}	Figure 30-7	Receive/Transmit Low Time	FE on SRCLK/SCK to RE on SRCLK/SCK	488.3	-
t_{CH}	Figure 30-7	Receive/Transmit High Time	RE on SRCLK/SCK to FE on SRCLK/SCK	488.3	-
t_{FSVH}	Figure 30-7, Figure 30-9	Frame Sync Valid High	RE on SRCLK/SCK to RE on SRFS/SFS	-	20
t_{FSVL}	Figure 30-7, Figure 30-9	Frame Sync Valid Low	RE on SRCLK/SCK to FE on SRFS/SFS	-	20
t_{TDV}	Figure 30-7, Figure 30-9	Transmit Data Valid	RE on SCK to STD Valid	-	20

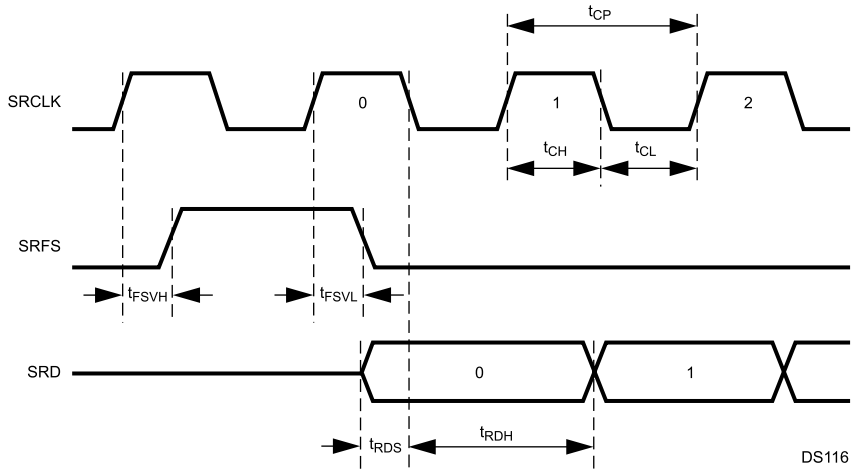

Figure 30-7. Receive Timing, Short Frame Sync

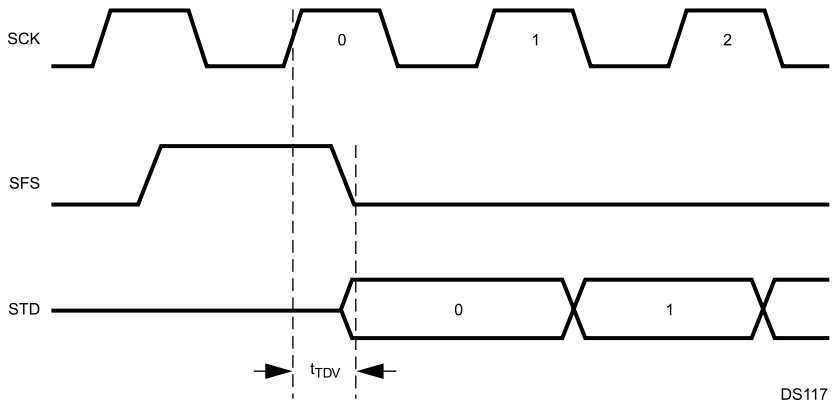

Figure 30-8. Transmit Timing, Short Frame Sync

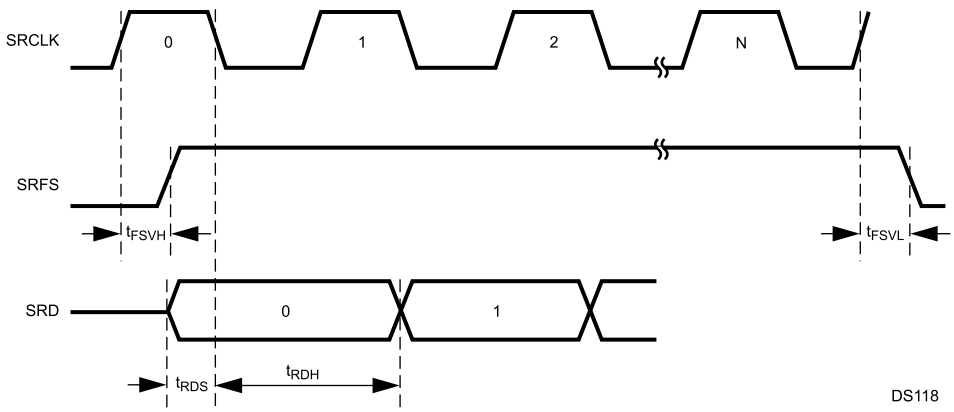

Figure 30-9. Receive Timing, Long Frame Sync

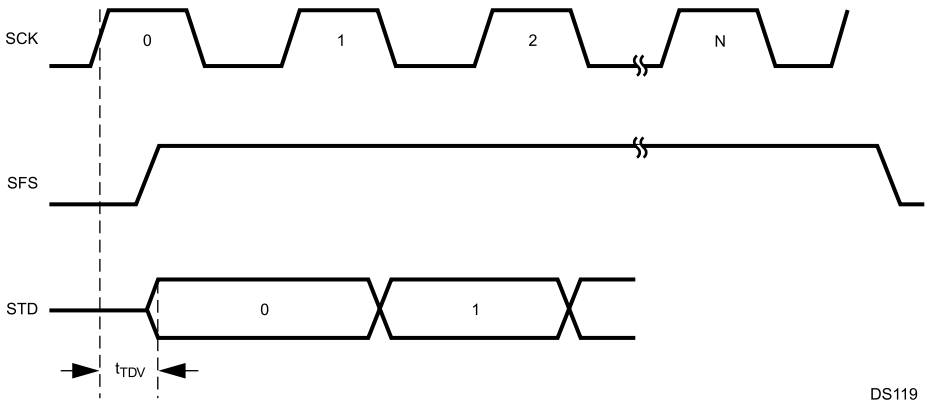

Figure 30-10. Transmit Timing, Long Frame Sync

Copyright © 2007–2013, Texas Instruments Incorporated

30.11 MICROWIRE/SPI TIMING

Table 30-6. Microwire/SPI Signals

Symbol	Figure	Description	Reference	Min (ns)	Max (ns)
Microwire/SPI Input Signals					
t_{MSKh}	Figure 30-11	Microwire Clock High	At 2.0V (both edges)	80	-
t_{MSKl}	Figure 30-11	Microwire Clock Low	At 0.8V (both edges)	80	-
t_{MSKp}	Figure 30-11	Microwire Clock Period	SCIDL bit = 0; Rising Edge (RE) MSK to next RE MSK	200	-
	Figure 30-12		SCIDL bit = 1; Falling Edge (FE) MSK to next FE MSK		-
t_{MSKh}	Figure 30-11	MSK Hold (slave only)	After $\overline{MWCS}$ goes inactive	40	-
t_{MSKs}	Figure 30-11	MSK Setup (slave only)	Before $\overline{MWCS}$ goes active	80	-
t_{MWCSh}	Figure 30-11	$\overline{MWCS}$ Hold (slave only)	SCIDL bit = 0: After FE MSK	40	-
	Figure 30-12		SCIDL bit = 1: After RE MSK		-
t_{MWCSs}	Figure 30-11	$\overline{MWCS}$ Setup (slave only)	SCIDL bit = 0: Before RE MSK	80	-
	Figure 30-12		SCIDL bit = 1: Before FE MSK		-
t_{MDIh}	Figure 30-11	Microwire Data In Hold (master)	Normal Mode: After RE MSK	0	-
	Figure 30-11		Alternate Mode: After FE MSK		-
	Figure 30-11	Microwire Data In Hold (slave)	Normal Mode: After RE MSK	40	-
	Figure 30-13		Alternate Mode: After FE MSK		-
t_{MDIs}	Figure 30-11	Microwire Data In Setup	Normal Mode: Before RE MSK	80	-
	Figure 30-13		Alternate Mode: Before FE MSK		-
Microwire/SPI Output Signals					
t_{MSKh}	Figure 30-11	Microwire Clock High	At 2.0V (both edges)	40	-
t_{MSKl}	Figure 30-11	Microwire Clock Low	At 0.8V (both edges)	40	-
t_{MSKp}	Figure 30-11	Microwire Clock Period	SCIDL bit = 0: Rising Edge	100	-
	Figure 30-12		(RE) MSK to next RE MSK		-
t_{MSKd}	Figure 30-11	MSK Leading Edge Delayed (master only)	Data Out Bit #7 Valid	0.5 tMSK	1.5 tMSK
t_{MDOf}	Figure 30-11	Microwire Data Float (slave only)	After RE on $\overline{MWCS}$	-	25
t_{MDOh}	Figure 30-11	Microwire Data Out Hold	Normal Mode: After FE MSK	0.0	-
	Figure 30-12		Alternate Mode: After RE MSK		
t_{MDOnf}	Figure 30-15	Microwire Data No Float (slave only)	After FE on $\overline{MWCS}$	0	25

Table 30-6. Microwire/SPI Signals (continued)

Microwire/SPI Signals					
t_{MDOv}	Figure 30-11	Microwire Data Out Valid	Normal Mode: After FE on MSK	-	25
			Alternate Mode: After RE on MSK		
t_{MITOp}	Figure 30-15	MDODI to MDIDO (slave only)	Propagation Time Value is the same in all clocking modes of the Microwire	-	25

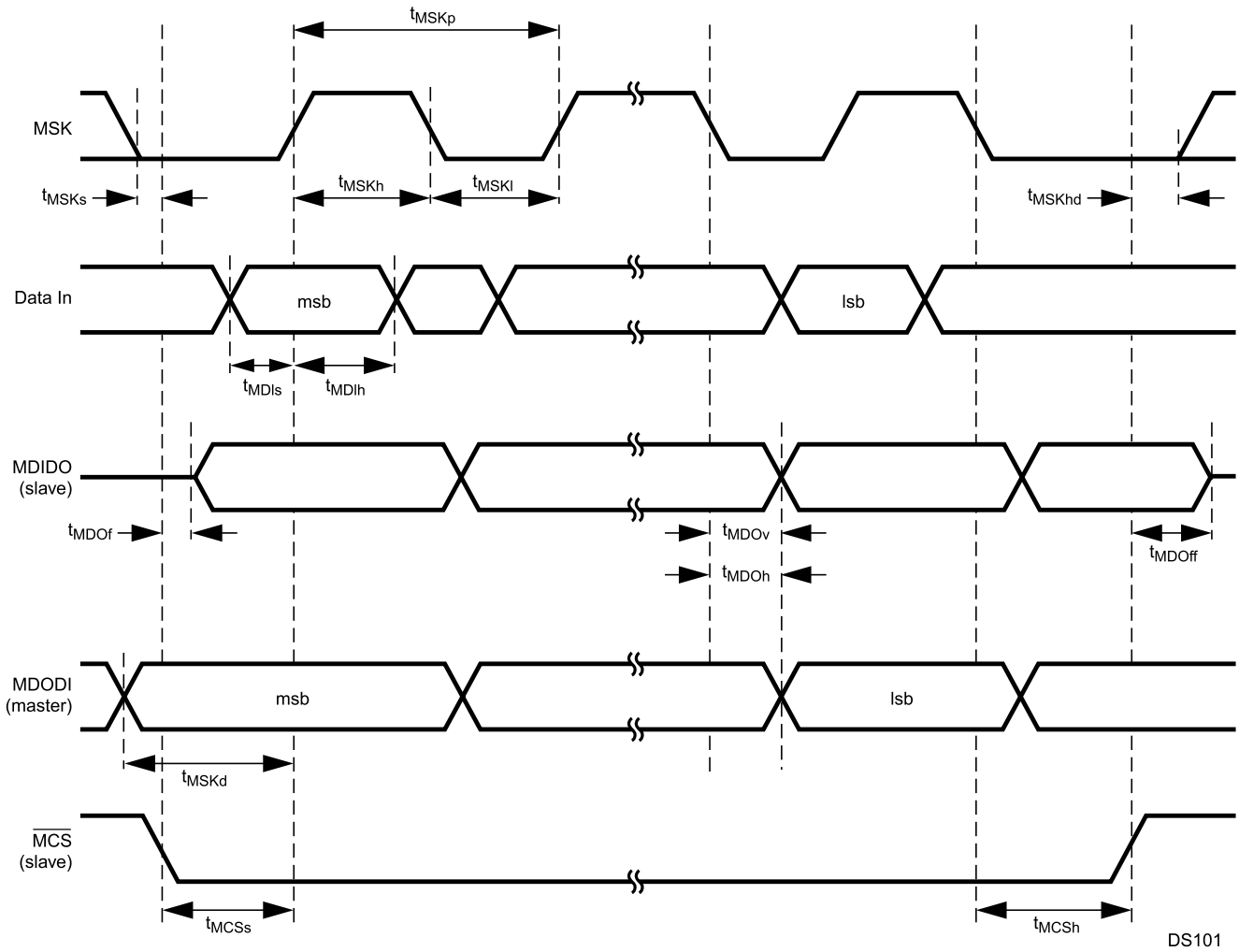

Figure 30-11. Microwire Transaction Timing, Normal Mode, SCIDL = 0

Copyright © 2007–2013, Texas Instruments Incorporated

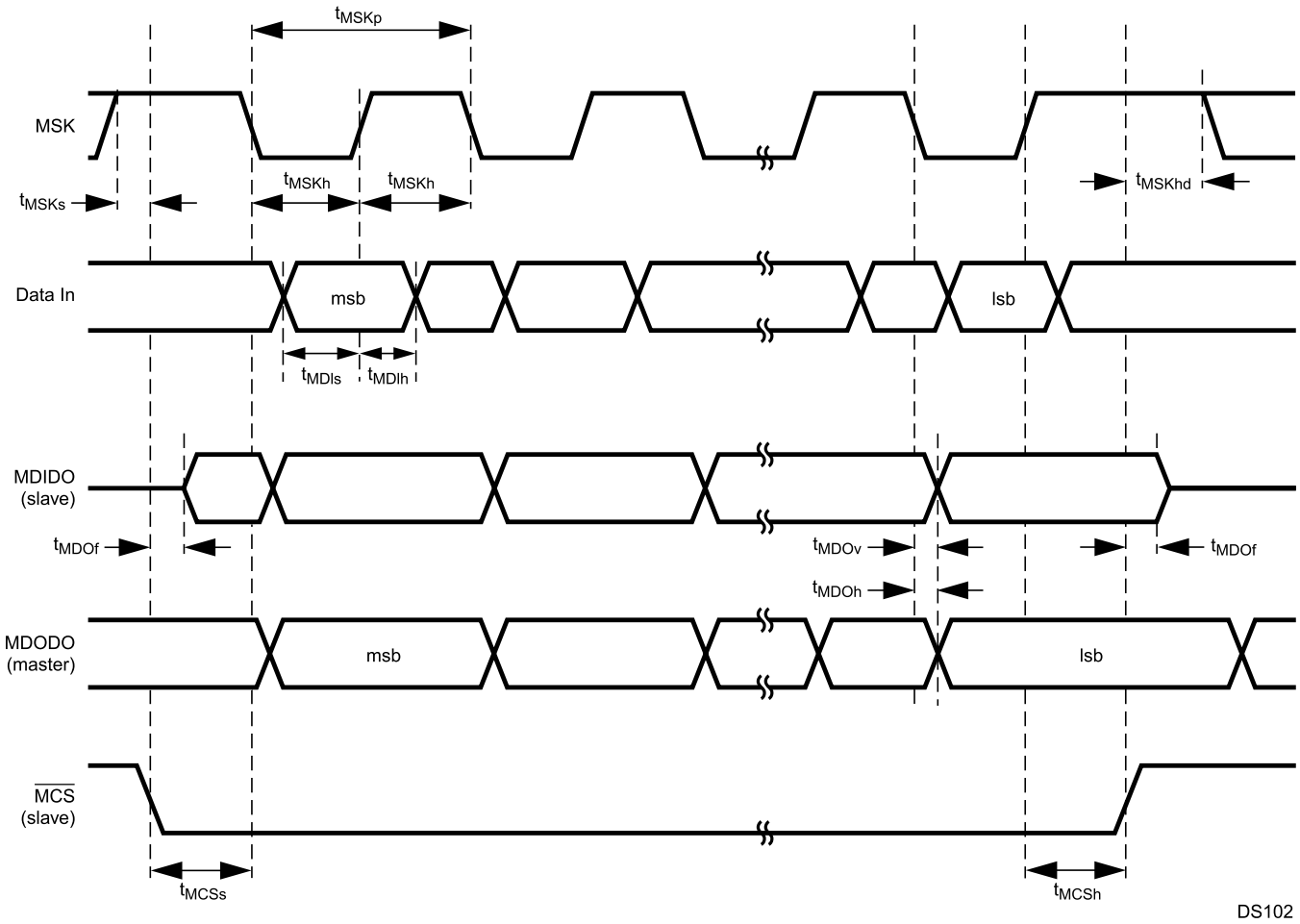

Figure 30-12. Microwire Transaction Timing, Normal Mode, SCIDL = 1

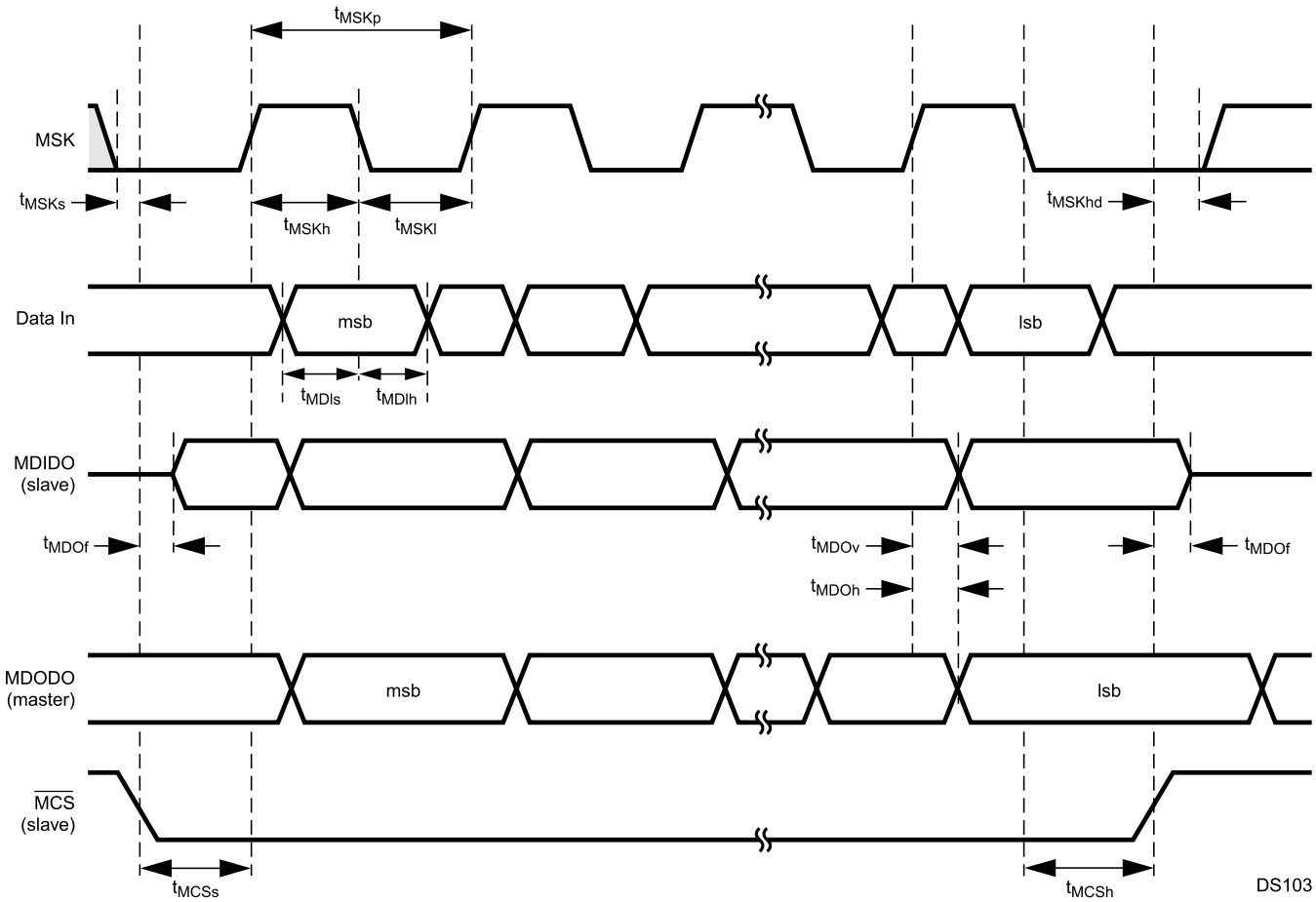

Figure 30-13. Microwire Transaction Timing, Alternate Mode, SCIDL = 0

Copyright © 2007–2013, Texas Instruments Incorporated

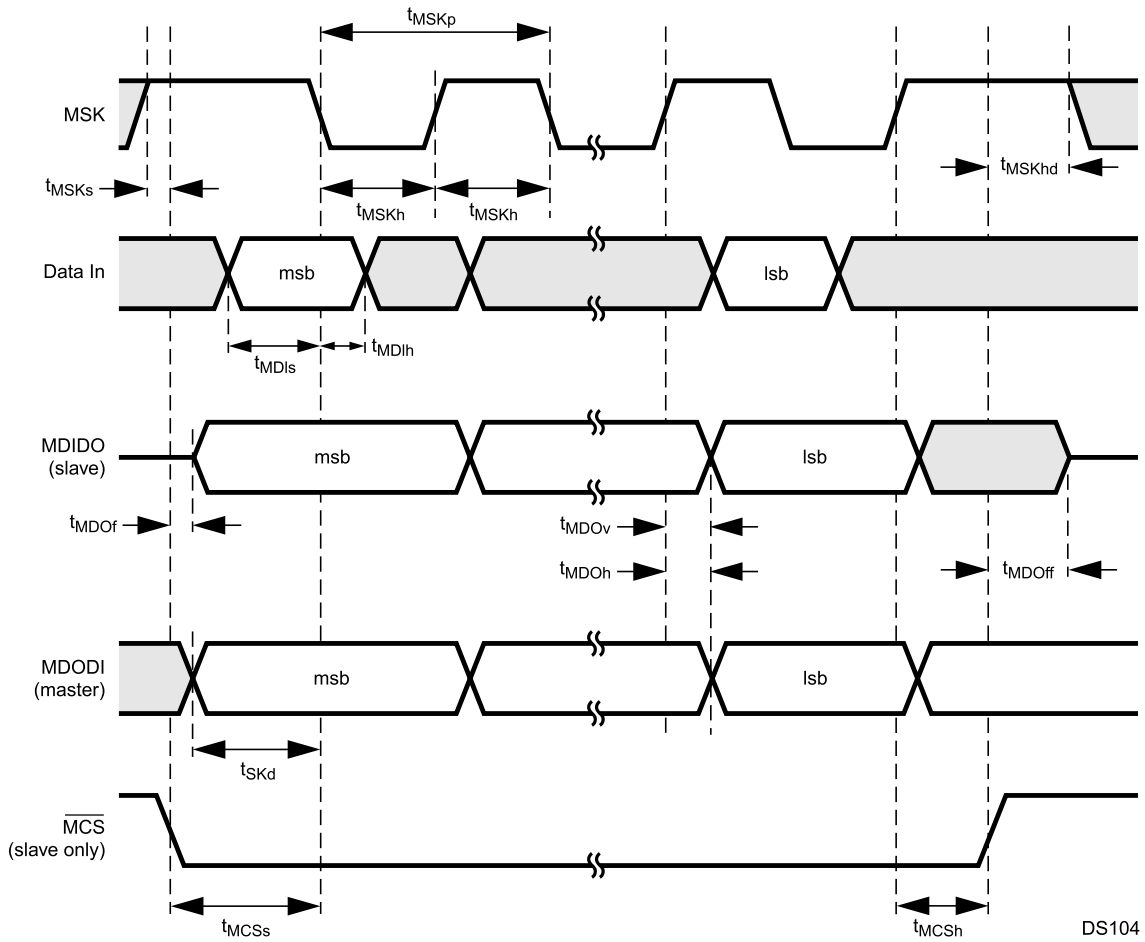

Figure 30-14. Microwire Transaction Timing, Alternate Mode, SCIDL = 1

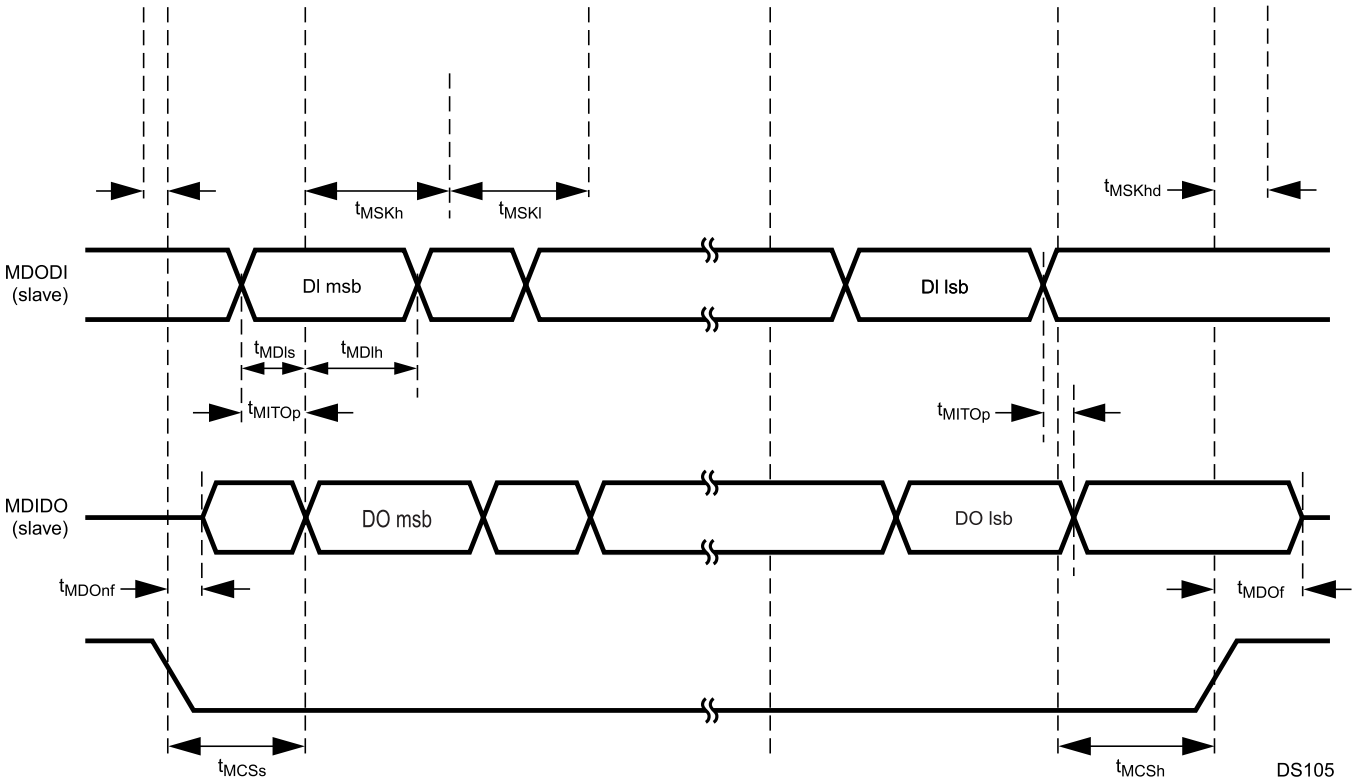

Figure 30-15. Microwire Transaction Timing, Data Echoed to Output, Normal Mode, SCIDL = 0, ECHO = 1, Slave Mode

Copyright © 2007–2013, Texas Instruments Incorporated

30.12 ACCESS.BUS TIMING

Table 30-7. ACCESS.bus Signals

Symbol	Figure	Description	Reference	Min (ns)	Max (ns)
ACCESS.bus Input Signals					
t_{BUFi}	Figure 30-17	Bus free time between Stop and Start Condition		tSCLhigho	-
t_{CSTOsi}	Figure 30-17	SCL setup time	Before Stop Condition	$(8 \times t_{CLK}) - t_{SCLri}$	-
t_{CSTRhi}	Figure 30-17	SCL hold time	After Start Condition	$(8 \times t_{CLK}) - t_{SCLri}$	-
t_{CSTRsi}	Figure 30-17	SCL setup time	Before Start Condition	$(8 \times t_{CLK}) - t_{SCLri}$	-
t_{DHCsi}	Figure 30-18	Data High setup time	Before SCL Rising Edge (RE)	$2 \times t_{CLK}$	-
t_{DLCsi}	Figure 30-17	Data Low setup time	Before SCL RE	$2 \times t_{CLK}$	-
t_{SCLfi}	Figure 30-16	SCL signal rise time		-	300
t_{SCLri}	Figure 30-16	SCL signal fall time		-	1000
$t_{SCLlowi}$	Figure 30-19	SCL low time	After SCL Falling Edge (FE)	$16 \times t_{CLK}$	-
$t_{SCLhighi}$	Figure 30-19	SCL high time	After SCL RE	$16 \times t_{CLK}$	-
t_{SDAri}	Figure 30-16	SDA signal rise time		-	1000
t_{SDAfl}	Figure 30-16	SDA signal fall time		-	300
t_{SDAhi}	Figure 30-19	SDA hold time	After SCL FE	0	-
t_{SDAsi}	Figure 30-19	SDA setup time	Before SCL RE	$2 \times t_{CLK}$	-
ACCESS.bus Output Signals					
t_{BUFo}	Figure 30-17	Bus free time between Stop and Start Condition		$t_{SCLhigho}$	
t_{CSTOso}	Figure 30-17	SCL setup time	Before Stop Condition	$t_{SCLhigho}$	-
t_{CSTRho}	Figure 30-17	SCL hold time	After Start Condition	$t_{SCLhigho}$	-
t_{CSTRso}	Figure 30-18	SCL setup time	Before Start Condition	$t_{SCLhigho}$	-
t_{DHCso}	Figure 30-18	Data High setup time	Before SCL R.E.	$t_{SCLhigho} - t_{SDAro}$	-
t_{DLCso}	Figure 30-17	Data Low setup time	Before SCL R.E.	$t_{SCLhigho} - t_{SDAfo}$	-
t_{SCLfo}	Figure 30-16	SCL signal Fall time		-	300
t_{SCLro}	Figure 30-16	SCL signal Rise time		-	-
$t_{SCLlowo}$	Figure 30-19	SCL low time	After SCL F.E.	$(K \times t_{CLK})$ -1e	-
$t_{SCLhigho}$	Figure 30-19	SCL high time	After SCL R.E.	$(K \times t_{CLK})$ -1e	-
t_{SDAfo}	Figure 30-16	SDA signal Fall time		-	300
t_{SDAro}	Figure 30-16	SDA signal Rise time		-	-
t_{SDAho}	Figure 30-19	SDA hold time	After SCL F.E.	$(7 \times t_{CLK}) - t_{SCLfo}$	-
t_{SDAvo}	Figure 30-19	SDA valid time	After SCL F.E.		$(7 \times t_{CLK}) + t_{RD}$

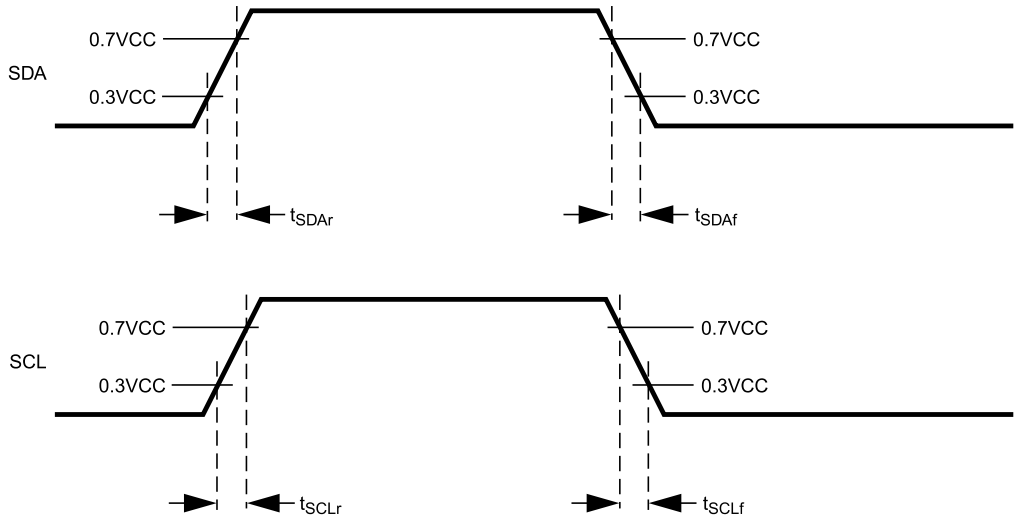

Note: In the timing tables the parameter name is added with an "o" for output signal timing and "i" for input signal timing.

DS106

Figure 30-16. ACB Signals (SDA and SCL) Timing

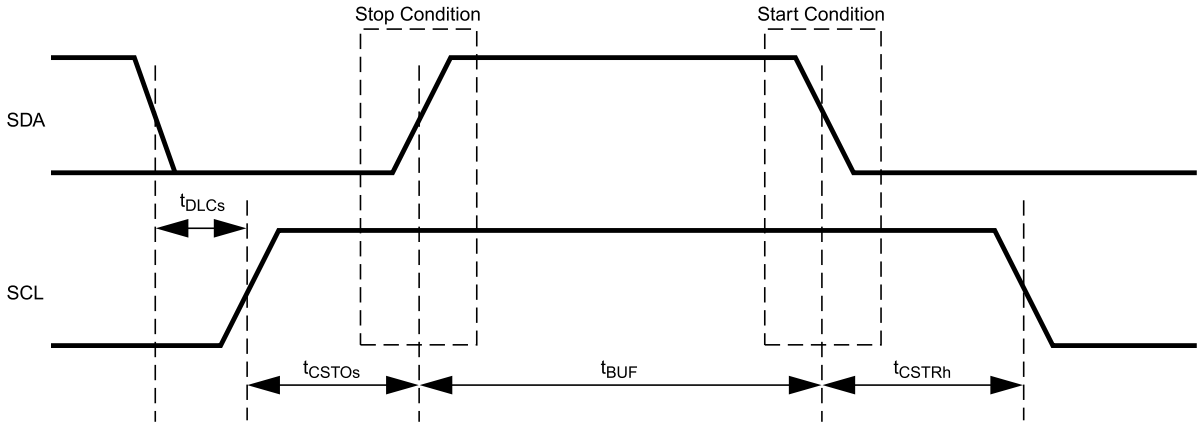

Note: In the timing tables the parameter name is added with an "o" for output signal timing and "i" for input signal timing. DS107

Figure 30-17. ACB Start and Stop Condition Timing

Copyright © 2007–2013, Texas Instruments Incorporated

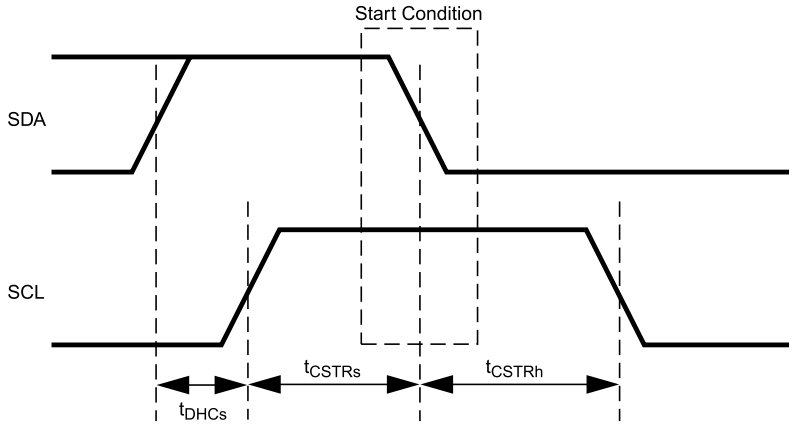

Note: In the timing tables the parameter name is added with an "o" for output signal timing and "i" for input signal timing.

DS108

Figure 30-18. ACB Start Condition Timing

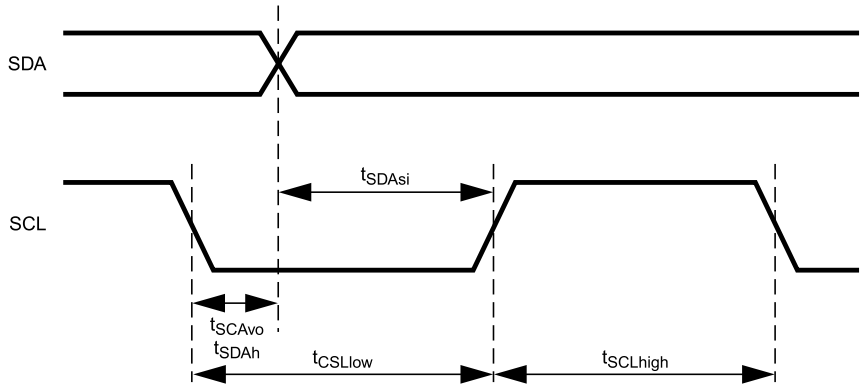

Note: In the timing tables the parameter name is added with an "o" for output signal timing and "i" for input signal timing. unless the parameter already includes the suffix.

DS109

Figure 30-19. ACB Data Timing

30.13 USB PORT AC CHARACTERISTICS

Table 30-8. USB Port Signals

Symbol	Description	Conditions(1)	Min	Typ	Max	Units
T_R	Rise Time	CL = 50 pF	4		20	ns
T_F	Fall Time	CL = 50 pF	4		20	ns
T_{RFM}	Fall/Rise Time Matching (T_R/T_F)	CL = 50 pF	90		110	%
V_{CRS}	Output Signal Crossover Voltage	CL = 50 pF	1.3		2	V
Z_{DRV}	Driver Output Impedance	CL = 50 pF	28		43	ohms

(1) Waveforms measured at 10% to 90%.

30.14 MULTI-FUNCTION TIMER (MFT) TIMING

Table 30-9. Multi-Function Timer Input Signals

Symbol	Figure	Description	Reference	Min (ns)	Max (ns)
tTAH	Figure 30-20	TA High Time	Rising Edge (RE) on CLK	T_{CLK} + 5	
tTAL	Figure 30-20	TA Low Time	RE on CLK	T_{CLK} + 5	
tTBH	Figure 30-20	TB High Time	RE on CLK	T_{CLK} + 5	
tTBL	Figure 30-20	TB Low Time	RE on CLK	T_{CLK} + 5	

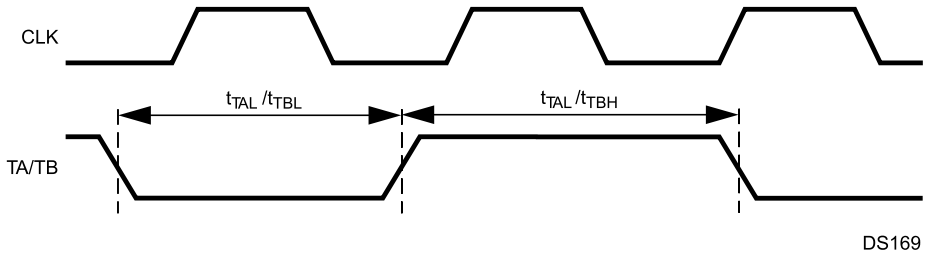

Figure 30-20. Multi-Function Timer Input Timing

30.15 VERSATILE TIMING UNIT (VTU) TIMING

Table 30-10. Versatile Timing Unit Input Signals

Symbol	Figure	Description	Reference	Min (ns)	Max (ns)
tTIOH	Figure 30-21	TIOx Input High Time	Rising Edge (RE) on CLK	1.5 × TCLK + 5ns	
tTIOL	Figure 30-21	TIOx Input Low Time	RE on CLK	1.5 × TCLK + 5ns	

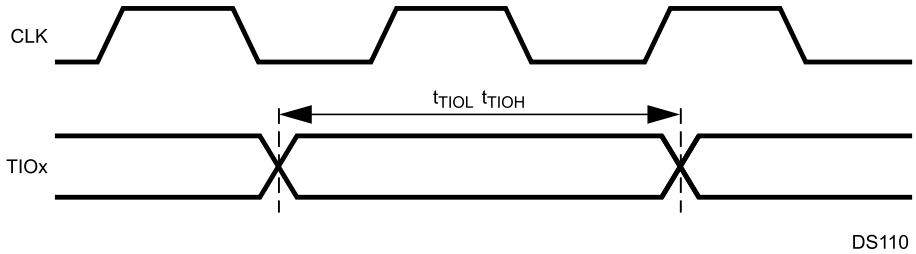

Figure 30-21. Versatile Timing Unit Input Timing

Copyright © 2007–2013, Texas Instruments Incorporated

30.16 EXTERNAL BUS TIMING

Table 30-11. External Bus Signals

Symbol	Figure	Description	Reference	Min (ns)	Max (ns)
External Bus Input Signals					
t1	Figure 30-22, Figure 30-24, Figure 30-25, Figure 30-26	Input Setup Time D[15:0]	Before Rising Edge (RE) on CLK	8	-
t2	Figure 30-22, Figure 30-24, Figure 30-25, Figure 30-26	Output Hold Time D[15:0]	After RE on CLK	0	-
External Bus Output Signals					
t_3	Figure 30-22, Figure 30-23	Output Valid Time D[15:0]	After RE on CLK	-	8
t_4	Figure 30-22, Figure 30-23, Figure 30-24, Figure 30-25, Figure 30-26	Output Valid Time A[22:0]	After RE on CLK	-	8
t_5	Figure 30-22, Figure 30-23, Figure 30-24, Figure 30-25, Figure 30-26	Output Active/Inactive Time $\overline{RD}$ $\overline{SEL[1:0]}$ $\overline{SELIO}$	After RE on CLK	-	8
t_6	Figure 30-22, Figure 30-23	Output Active/Inactive Time $\overline{WR[1:0]}$	After RE on CLK	-	0.5 Tclk + 8
t_7	Figure 30-24	Minimum Inactive Time $\overline{RD}$	At 2.0V	Tclk - 4	-
t_8	Figure 30-22	Output Float Time D[15:0]	After RE on CLK	-	8
t_9	Figure 30-22	Minimum Delay Time	From $\overline{RD}$ Trailing Edge (TE) to D[15:0] driven	Tclk - 4	-
t_{10}	Figure 30-22, Figure 30-23	Minimum Delay Time	From $\overline{RD}$ TE to $\overline{SELn}$ Leading Edge (LE)	0	-
t_{11}	Figure 30-23	Minimum Delay Time	From $\overline{SELx}$ TE to $\overline{SELy}$ LE	0	-
t_{12}	Figure 30-22, Figure 30-23, Figure 30-24, Figure 30-25, Figure 30-26	Output Hold Time A[22:0] D[15:0] $\overline{RD}$ $\overline{SEL[2:0]}$ $\overline{SELIO}$	After RE on CLK	0	-
t_{13}	Figure 30-22, Figure 30-23	Output Hold Time $\overline{WR[1:0]}$	After RE on CLK	0.5 Tclk - 3	-

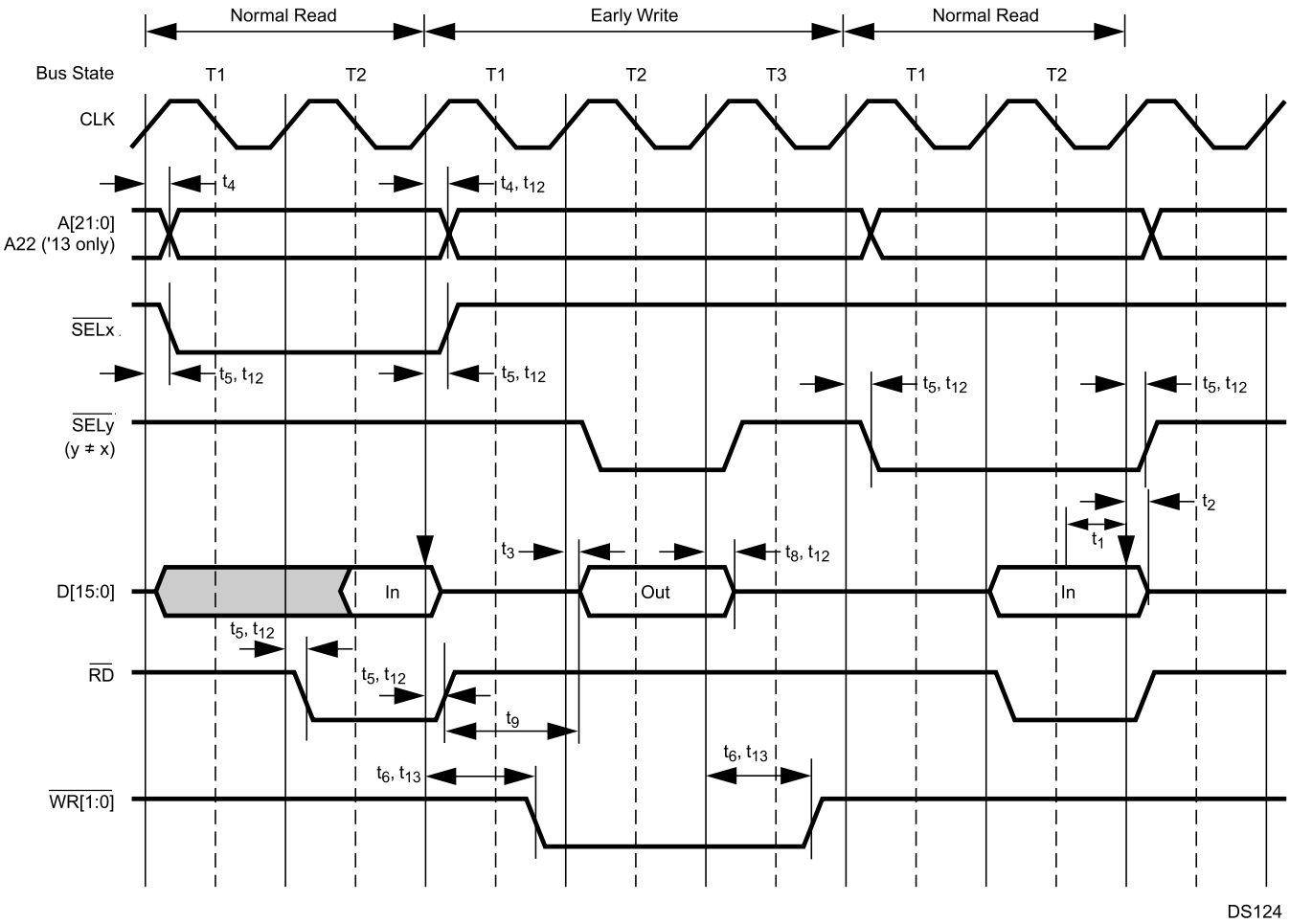

Figure 30-22. Early Write Between Normal Read Cycles (No Wait States)

Copyright © 2007–2013, Texas Instruments Incorporated

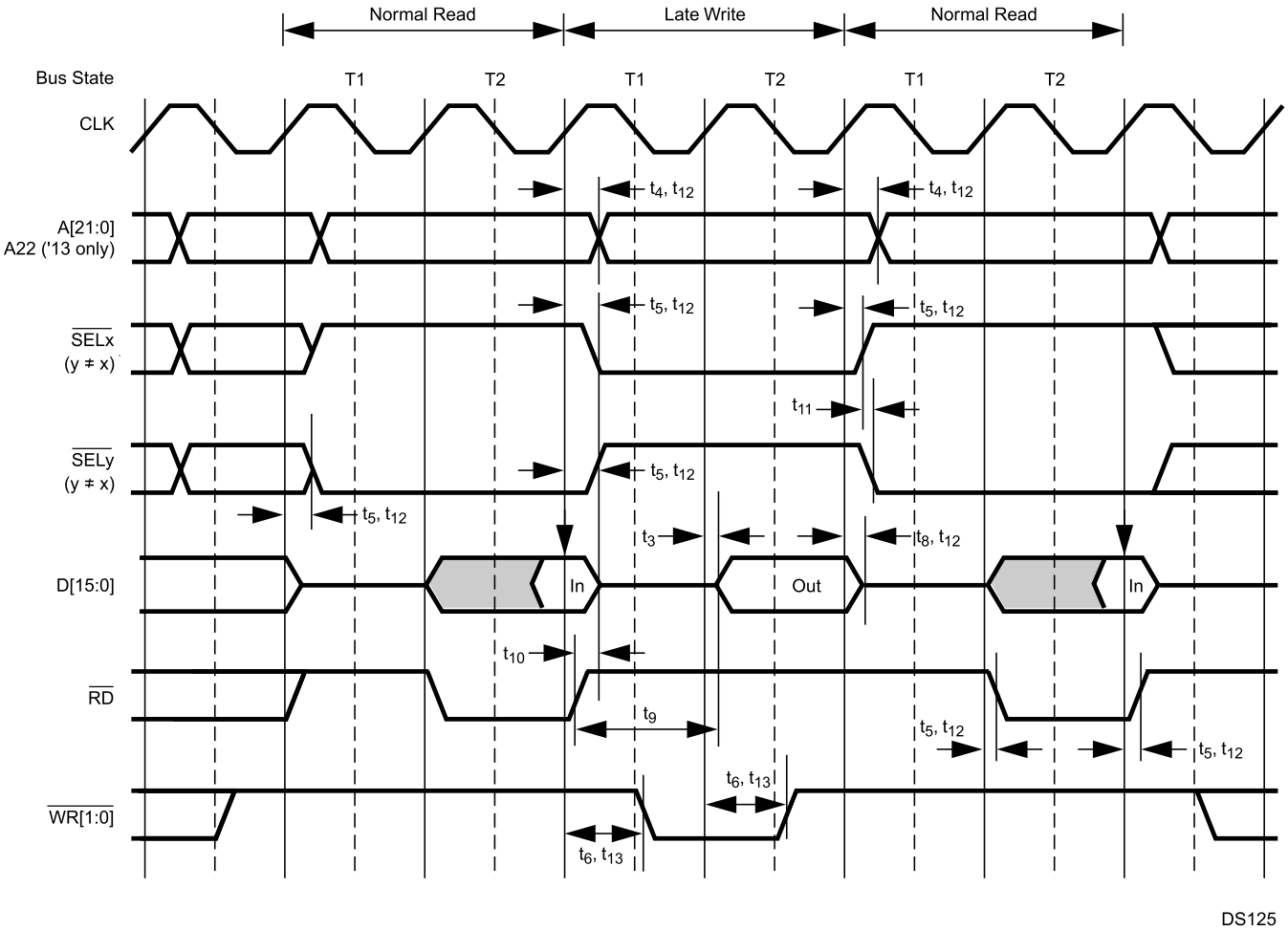

Figure 30-23. Late Write Between Normal Read Cycles (No Wait States)

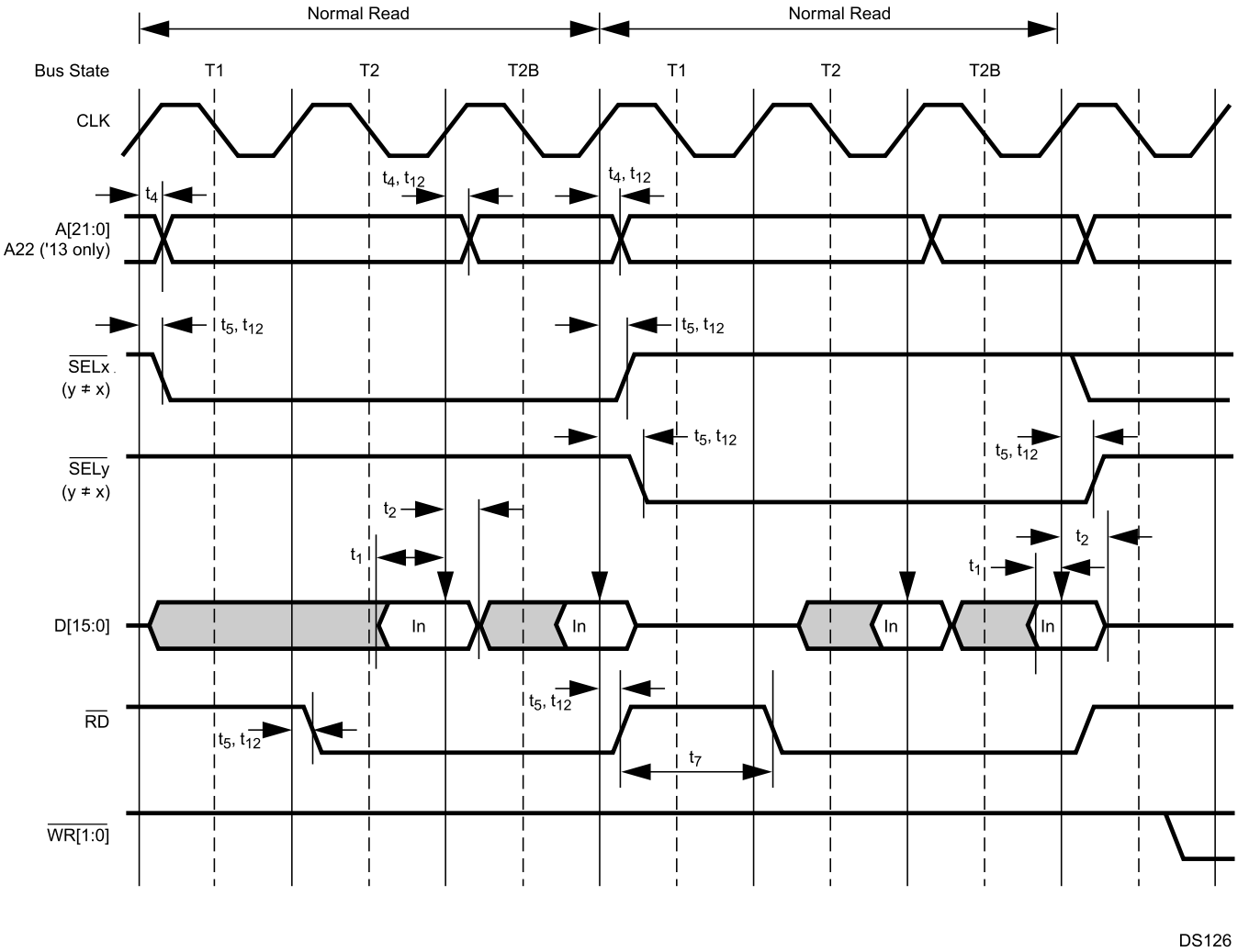

Figure 30-24. Consecutive Normal Read Cycles (Burst, No Wait States)

Copyright © 2007–2013, Texas Instruments Incorporated

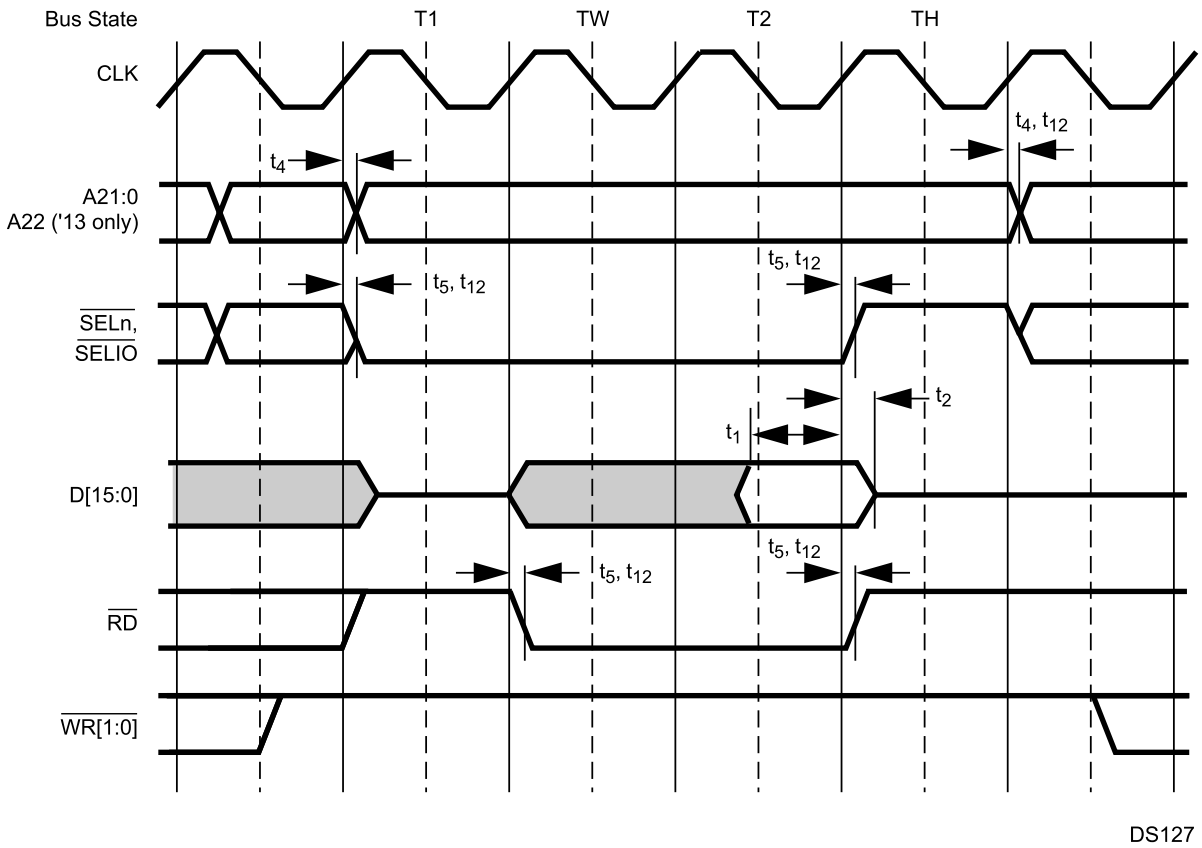

Figure 30-25. Normal Read Cycle (Wait Cycle Followed by Hold Cycle)

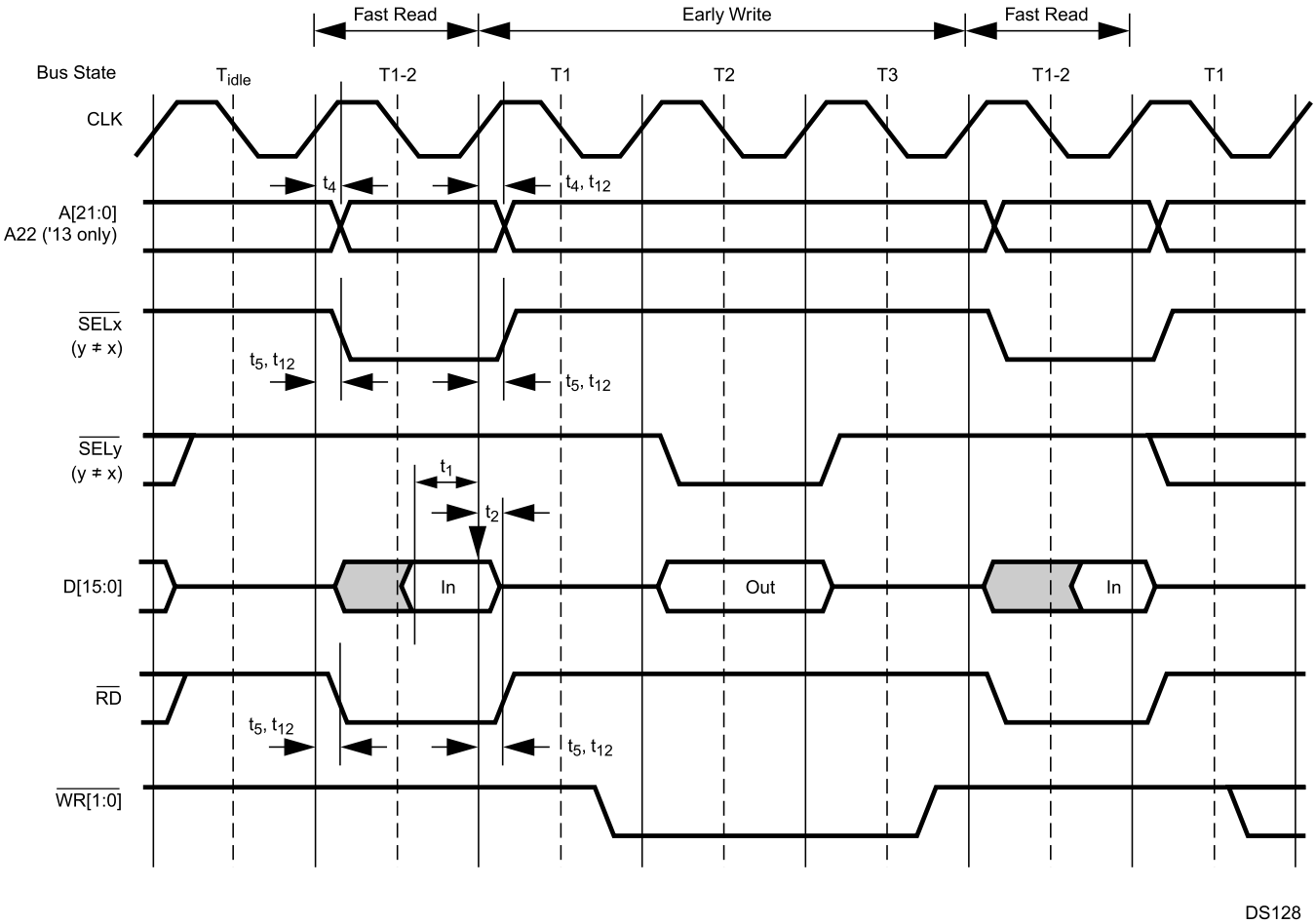

Figure 30-26. Early Write Between Fast Read Cycles

Copyright © 2007–2013, Texas Instruments Incorporated

31 PIN ASSIGNMENTS

31.1 LQFP-128 PACKAGE

For 128-pin devices, Figure 31-1 provides a pinout diagram, and Table 31-2 provides the pin assignments. The physical dimensions are provided in Section 32.

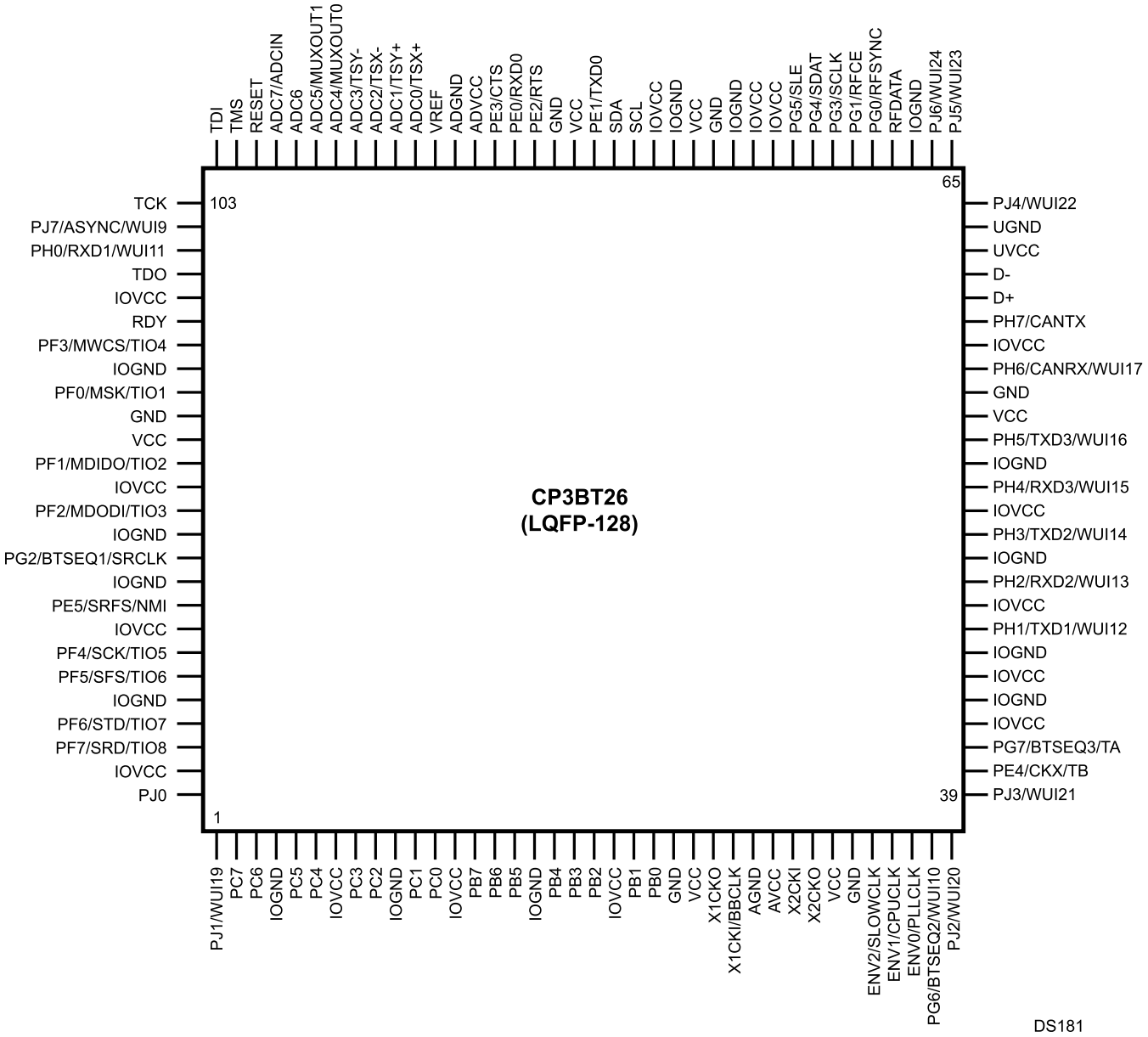

Figure 31-1. CP3BT26 in the LQFP-128 Package (Top View)

Table 31-1. Pin Assignments for LQFP-128 Package(1)(2)

Pin Name	Alternate Function(s)	Pin Numbers	Type
GND		24, 33, 56, 77, 85, 112	PWR
VCC		25, 32, 55, 78, 84, 113	PWR
IOGND		4, 10, 17, 43, 45, 49, 53, 67, 76, 79, 110, 117,119, 124	PWR
IOVCC		7, 13, 21, 42, 44, 47, 51,58, 74, 75, 80, 107, 115,121, 127	PWR
X1CKO		26	O
X1CKI	BBCLK	27	I
AGND		28	PWR
AVCC		29	PWR
ADGND		90	PWR
ADVCC		89	PWR
UVCC		62	PWR
UGND		63	PWR
X2CKI		30	I
X2CKO		3	O
ENV2	SLOWCLK	34	I/O
ENV	CPUCLK	35	I/O
ENV0	PLLCLK	36	I/O
RESET		100	I
TMS		101	I
TDI		102	I
TCK		103	I
TDO		106	O
RDY		108	O
RFDATA		68	I/O
D-		6	I/O
D+		60	I/O
SCL		8	I/O
SDA		82	I/O
ADC0	TSX+	92	I/O/HIZ 20mA+
ADC	TSY+	93	I/O/HIZ 20mA+
ADC2	TSX-	94	I/O/HIZ 20mA+
ADC3	TSY-	95	I/O/HIZ 20mA+
ADC4	MUXOUT0	96	I/O
ADC5	MUXOUT	97	I/O
ADC6		98	I
ADC7	ADCIN	99	I
VREFP		9	I
PB0	D0	23	GPIO
PB	D1	22	GPIO
PB2	D2	20	GPIO
PB3	D3	19	GPIO
PB4	D4	18	GPIO
PB5	D5	16	GPIO
PB6	D6	15	GPIO

(1) The ENV0, ENV1, ENV2, $\overline{\text{RESET}}$, TCK, TDI, and TMS pins each have a weak pull-up to keep the input from floating.
(2) These functions are always enabled, due to the direct low-impedance path to these pins.

Copyright © 2007–2013, Texas Instruments Incorporated

Table 31-1. Pin Assignments for LQFP-128 Package[(1)(2)] (continued)

Pin Name	Alternate Function(s)	Pin Numbers	Type
PB7	D7	14	GPIO
PC0	D8	12	GPIO
PC	D9	11	GPIO
PC2	D10	9	GPIO
PC3	D11	8	GPIO
PC4	D12	6	GPIO
PC5	D13	5	GPIO
PC6	D14	3	GPIO
PC7	D15	2	GPIO
PE0	RXD0	87	GPIO
PE	TXD0	83	GPIO
PE2	$\overline{\text{RTS}}$	86	GPIO
PE3	$\overline{\text{CTS}}$	88	GPIO
PE4	CKX/TB	40	GPIO
PE5	SRFS/$\overline{\text{NMI}}$	120	GPIO
PF0	MSK/TIO1	111	GPIO
PF1	MDIDO/TIO2	114	GPIO
PF2	MDODI/TIO3	116	GPIO
PF3	$\overline{\text{MWCS}}$/TIO4	109	GPIO
PF4	SCK/TIO5	122	GPIO
PF5	SFS/TIO6	123	GPIO
PF6	STD/TIO7	125	GPIO
PF7	SRD/TIO8	126	GPIO
PG0	RFSYNC	69	GPIO
PG	RFCE	70	GPIO
PG2	SRCLK	118	GPIO
PG3	SCLK	7	GPIO
PG4	SDAT	72	GPIO
PG5	$\overline{\text{SLE}}$	73	GPIO
PG6	WUI10	37	GPIO
PG7	TA	4	GPIO
PH0	RXD1/WUI11	105	GPIO
PH1	TXD1/WUI12	46	GPIO
PH2	RXD2/WUI13	48	GPIO
PH3	TXD2/WUI14	50	GPIO
PH4	RXD3/WUI15	52	GPIO
PH5	TXD3/WUI16	54	GPIO
PH6	CANRX/WUI17	57	GPIO
PH7	CANTX	59	GPIO
PJ0	WUI18	128	GPIO
PJ	WUI19	1	GPIO
PJ2	WUI20	38	GPIO
PJ3	WUI2	39	GPIO
PJ4	WUI22	64	GPIO
PJ5	WUI23	65	GPIO
PJ6	WUI24	66	GPIO
PJ7	ASYNC/WUI9	104	GPIO

Copyright © 2007–2013, Texas Instruments Incorporated

31.2 LQFP-144 PACKAGE

For 144-pin devices, Figure 31-2 provides a pinout diagram, and Table 31-2 provides the pin assignments. The physical dimensions are provided in Section 32.

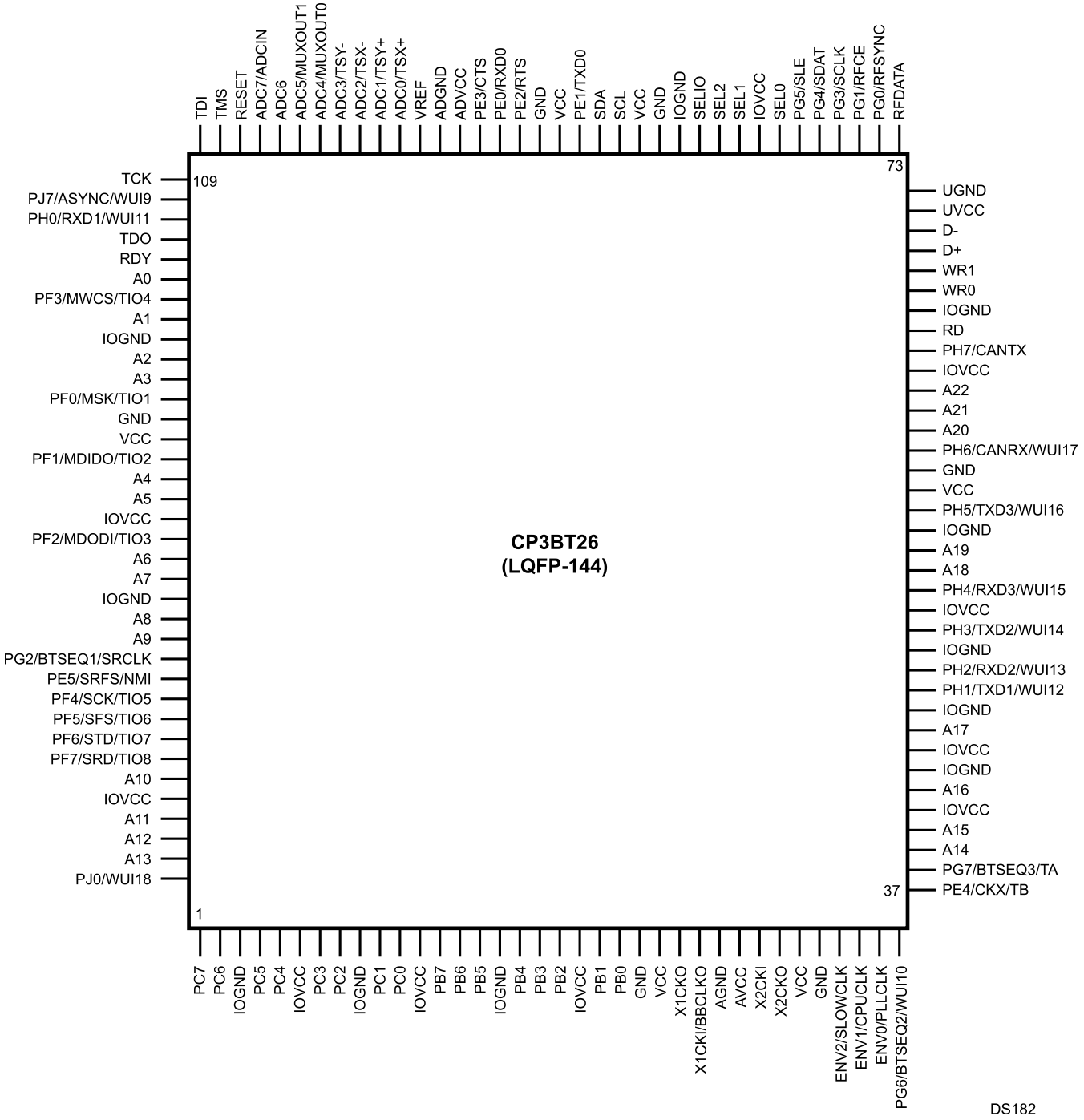

Figure 31-2. CP3BT26 in the LQFP-144 Package (Top View)

Copyright © 2007–2013, Texas Instruments Incorporated

Table 31-2. Pin Assignments for LQFP-144 Package(1)(2)

Pin Name	Alternate Function(s)	Pin Number	Type
GND		23, 32, 58, 85, 91, 121	PWR
VCC		24, 31, 57, 86, 90, 122	PWR
IOGND		3, 9, 16, 43, 46, 49, 55,66, 84, 117, 130	PWR
IOVCC		6, 12, 20, 41, 44, 51, 63,80, 126, 140	PWR
AGND		27	PWR
AVCC		28	PWR
ADGND		96	PWR
ADVCC		95	PWR
UVCC		7	PWR
UGND		72	PWR
X1CKI	BBCLK	26	I
X1CKO		25	O
X2CKI		29	I
X2CKO		30	O
ENV2	SLOWCLK	33	I/O
ENV	CPUCLK	34	I/O
ENV0	PLLCLK	35	I/O
RESET		106	I
TMS		107	I
TDI		108	I
TCK		109	I
TDO		112	O
RDY		113	O
RFDATA		73	I/O
D-		70	I/O
D+		69	I/O
SCL		87	I/O
SDA		88	I/O
ADC0	TSX+	98	I/O/HIZ 20mA+
ADC	TSY+	99	I/O/HIZ 20mA+
ADC2	TSX-	100	I/O/HIZ 20mA+
ADC3	TSY-	101	I/O/HIZ 20mA+
ADC4	MUXOUT0	102	I/O
ADC5	MUXOUT1	103	I/O
ADC6		104	I
ADC7	ADCIN	105	I
VREFP		97	I
PB0	D0	22	GPIO
PB	D1	21	GPIO
PB2	D2	19	GPIO
PB3	D3	18	GPIO
PB4	D4	17	GPIO
PB5	D5	15	GPIO
PB6	D6	14	GPIO

(1) The ENV0, ENV1, ENV2, $\overline{\text{RESET}}$, TCK, TDI, and TMS pins each have a weak pull-up to keep the input from floating.
(2) These functions are always enabled, due to the direct low-impedance path to these pins.

Copyright © 2007–2013, Texas Instruments Incorporated

Table 31-2. Pin Assignments for LQFP-144 Package[(1)(2)] (continued)

PB7	D7	13	GPIO
PC0	D8	11	GPIO
PC	D9	10	GPIO
PC2	D10	8	GPIO
PC3	D11	7	GPIO
PC4	D12	5	GPIO
PC5	D13	4	GPIO
PC6	D14	2	GPIO
PC7	D15	1	GPIO
PE0	RXD0	93	GPIO
PE	TXD0	89	GPIO
PE2	$\overline{\text{RTS}}$	92	GPIO
PE3	$\overline{\text{CTS}}$	94	GPIO
PE4	CKX/TB	37	GPIO
PE5	SRFS/$\overline{\text{NMI}}$	134	GPIO
PF0	MSK/TIO1	120	GPIO
PF	MDIDO/TIO2	123	GPIO
PF2	MDODI/TIO3	127	GPIO
PF3	$\overline{\text{MWCS}}$/TIO4	115	GPIO
PF4	SCK/TIO5	135	GPIO
PF5	SFS/TIO6	136	GPIO
PF6	STD/TIO7	137	GPIO
PF7	SRD/TIO8	138	GPIO
PG0	RFSYNC	74	GPIO
PG	RFCE	75	GPIO
PG2	SRCLK	133	GPIO
PG3	SCLK	76	GPIO
PG4	SDAT	77	GPIO
PG5	$\overline{\text{SLE}}$	78	GPIO
PG6	WUI10	36	GPIO
PG7	TA	38	GPIO
PH0	RXD1/WUI11	111	GPIO
PH1	TXD1/WUI12	47	GPIO
PH2	RXD2/WUI13	48	GPIO
PH3	TXD2/WUI14	50	GPIO
PH4	RXD3/WUI15	52	GPIO
PH5	TXD3/WUI16	56	GPIO
PH6	CANRX/WUI17	59	GPIO
PH7	CANTX	64	GPIO
PJ0	WUI18	144	GPIO
PJ7	ASYNC	110	GPIO
Pin Name	Alternate Function(s)	Pin Number	Type
A22		62	O
A2		61	O
A20		60	O
A19		54	O
A18		53	O
A17		45	O

Copyright © 2007–2013, Texas Instruments Incorporated

Table 31-2. Pin Assignments for LQFP-144 Package[(1)(2)] (continued)

A16		42	O
A15		40	O
A14		39	O
A13		143	O
A12		142	O
A11		141	O
A10		139	O
A9		132	O
A8		131	O
A7		129	O
A6		128	O
A5		125	O
A4		124	O
A3		119	O
A2		118	O
A1		116	O
A0		114	O
$\overline{SEL0}$		79	O
$\overline{SEL1}$		8	O
$\overline{SEL2}$		82	O
$\overline{SELIO}$		83	O
$\overline{RD}$		65	O
$\overline{WR0}$		67	O
$\overline{WR1}$		68	O

Note 1: The ENV0, ENV1, ENV2, $\overline{RESET}$, TCK, TDI, and TMS pins each have a weak pull-up to keep the input from floating.
Note 2: These functions are always enabled, due to the direct low-impedance path to these pins.

32 Physical Dimensions

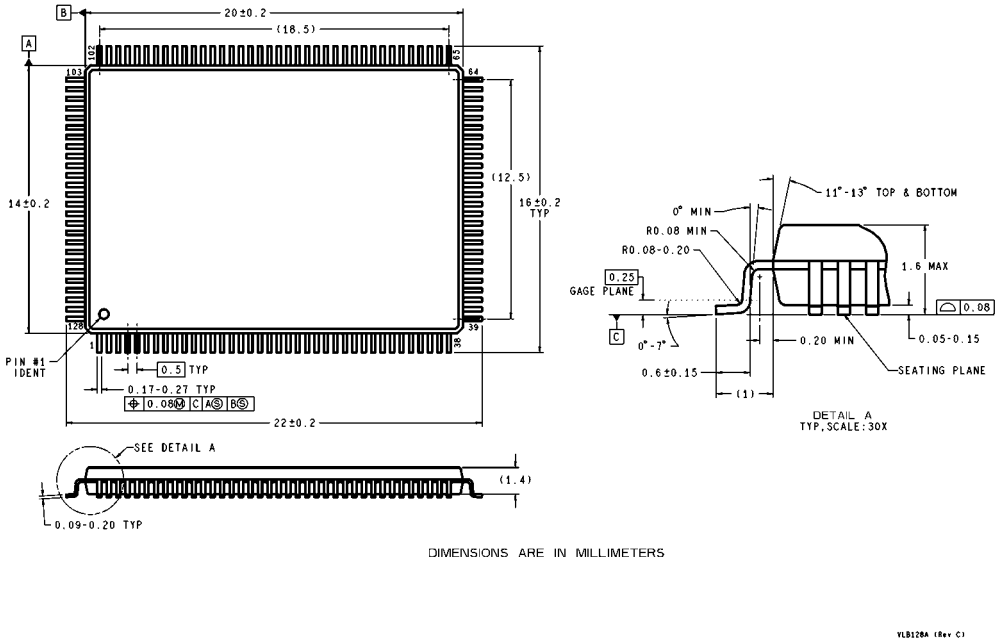

Figure 32-1. LQFP-128 Package

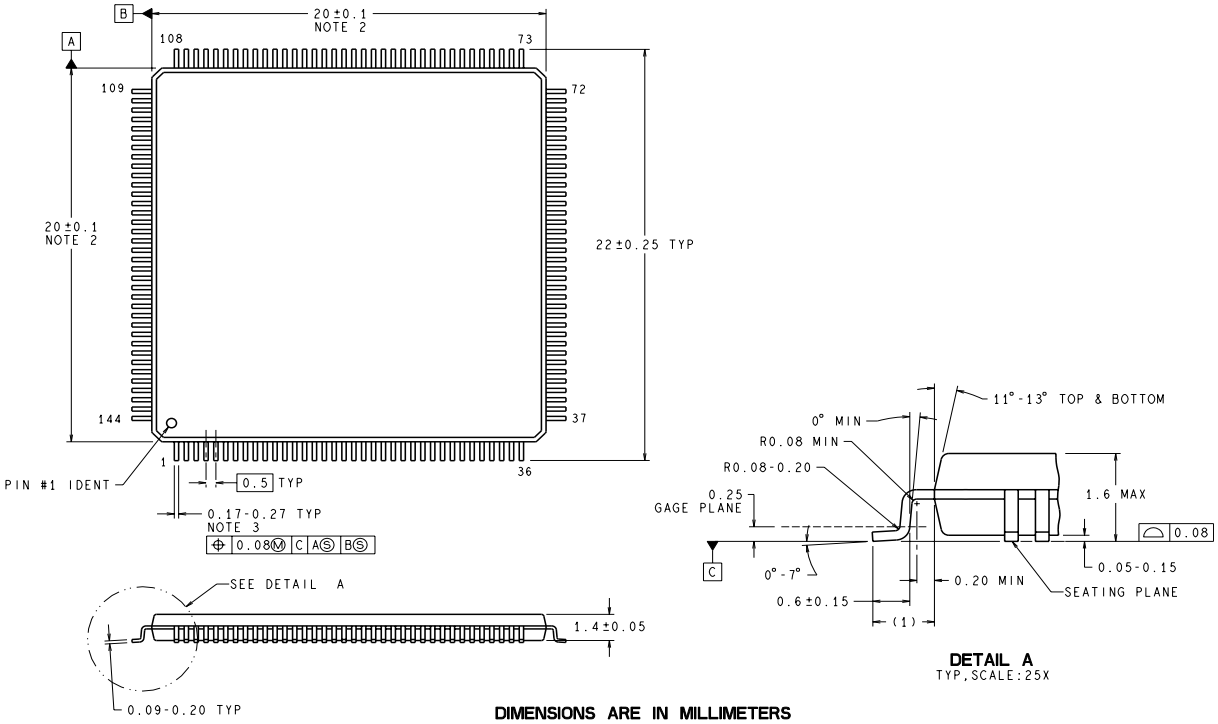

Figure 32-2. LQFP-144 Package

Copyright © 2007–2013, Texas Instruments Incorporated

Revision History

NOTE: Page numbers for previous revisions may differ from page numbers in the current version.

Date	Major Changes From Previous Version
4/3/2003	Original release.
5/26/2003	Fixed maximum boot area in . Fixed names of clock signals in Figure 11-2and Figure 11-3 . Fixed addresses of FSMARx registers in Register Map Section. Added default value for RNGDIV.
6/16/2003	Corrected . Changed I_{OH} and $I_{OL.}$
6/30/2003	Changed NSIDs, deleted commercial temperature range device, changed ADC conversion time to 15 microseconds.
10/7/2003	Updated DC electrical specifications. Added ADC electrical specifications. Added more detail to Section 6.1 . Added Table 12-2 .
11/14/2003	Defined valid range of SCDV field in Microwire/SPI module. Noted default PRSSC register value generates a Slow Clock frequency slightly higher than 32768 Hz. Clarified usage of CVSTAT register bits and fields in CVSD/PCM module. Updated layout of Bluetooth LLC registers. Added usage hint for avoiding ACCESS.bus module bus error. Added usage hint for avoiding CAN unexpected loopback condition.
2/28/2004	Changed NSID designations in the product selection guide. Updated Bluetooth section for LMX5251 and LMX5252 radio chips. Added BTSEQ[3:1] signals to pin descriptions, GPIO alternate functions, and package pin assignments. Added entry for CTIM register in CAN section register list. Changed CVSD Conversion section. Changed definition of the RESOLUTION field of the CVSD Control register (CVCTRL). Changed reset values for ADC registers. Added maximum I/O voltage in Absolute Maximum Ratings section. Added $\overline{\text{RESET}}$ Low minimum DC specification. Added Iccprog DC specification. Changed Vxl2 DC specification.
3/16/2004	Changed LMX5251 interface circuit. Updated DC specifications for clock input low voltage, reset input high voltage, and halt current.
5/10/2004	Corrected NSIDs for no-lead solder parts.
5/12/2004	Moved revision history in front of physical dimensions. Changed back page disclaimers.
6/2/2004	Changed AC and DC specifications.
6/15/04	Changed absolute maximum supply voltage to 3.6V. Changed Preliminary to Final.
7/16/04	Added AC timing specifications for ACCESS.bus, external bus, GPIO, Microwire/SPI, and UART. Corrected address of flash data memory in Section 8.
11/9/04	Added conditions which clear the ACBST, ACBCST, and ACBCTL1 registers. Added external reset as condition which clears WDRST and ISPRST bits in the MSTAT register. Inverted sense of PEN_DOWN bit in the ADCRESLT register.
4/4/05	Added new reset circuits. Added note about fluctuations in response due to SDI activity. New back page.
7/1/06	Added restriction that the USB interface requires a System Clock frequency between 12 and 24 MHz.
9/24/06	Added 14-bit counter delay to external reset.
2/21/07	Updated NSIDs.

Copyright © 2007–2013, Texas Instruments Incorporated

33 Notes

Copyright © 2007–2013, Texas Instruments Incorporated

PACKAGING INFORMATION

Orderable part number	Status (1)	Material type (2)	Package | Pins	Package qty | Carrier	RoHS (3)	Lead finish/ Ball material (4)	MSL rating/ Peak reflow (5)	Op temp (°C)	Part marking (6)
CP3BT26Y98NEP/NOPB	Active	Production	LQFP (PGE) | 144	60 | JEDEC TRAY (10+1)	Yes	SN	Level-3-260C-168 HR	-	CP3BT26Y98NEP
CP3BT26Y98NEP/NOPB.B	Active	Production	LQFP (PGE) | 144	60 | JEDEC TRAY (10+1)	Yes	SN	Level-3-260C-168 HR	See CP3BT26Y98NEP/ NOPB	CP3BT26Y98NEP

(1) **Status:** For more details on status, see our product life cycle.

(2) **Material type:** When designated, preproduction parts are prototypes/experimental devices, and are not yet approved or released for full production. Testing and final process, including without limitation quality assurance, reliability performance testing, and/or process qualification, may not yet be complete, and this item is subject to further changes or possible discontinuation. If available for ordering, purchases will be subject to an additional waiver at checkout, and are intended for early internal evaluation purposes only. These items are sold without warranties of any kind.

(3) **RoHS values:** Yes, No, RoHS Exempt. See the TI RoHS Statement for additional information and value definition.

(4) **Lead finish/Ball material:** Parts may have multiple material finish options. Finish options are separated by a vertical ruled line. Lead finish/Ball material values may wrap to two lines if the finish value exceeds the maximum column width.

(5) **MSL rating/Peak reflow:** The moisture sensitivity level ratings and peak solder (reflow) temperatures. In the event that a part has multiple moisture sensitivity ratings, only the lowest level per JEDEC standards is shown. Refer to the shipping label for the actual reflow temperature that will be used to mount the part to the printed circuit board.

(6) **Part marking:** There may be an additional marking, which relates to the logo, the lot trace code information, or the environmental category of the part.

Multiple part markings will be inside parentheses. Only one part marking contained in parentheses and separated by a "~" will appear on a part. If a line is indented then it is a continuation of the previous line and the two combined represent the entire part marking for that device.

Important Information and Disclaimer: The information provided on this page represents TI's knowledge and belief as of the date that it is provided. TI bases its knowledge and belief on information provided by third parties, and makes no representation or warranty as to the accuracy of such information. Efforts are underway to better integrate information from third parties. TI has taken and continues to take reasonable steps to provide representative and accurate information but may not have conducted destructive testing or chemical analysis on incoming materials and chemicals. TI and TI suppliers consider certain information to be proprietary, and thus CAS numbers and other limited information may not be available for release.

In no event shall TI's liability arising out of such information exceed the total purchase price of the TI part(s) at issue in this document sold by TI to Customer on an annual basis.

TRAY

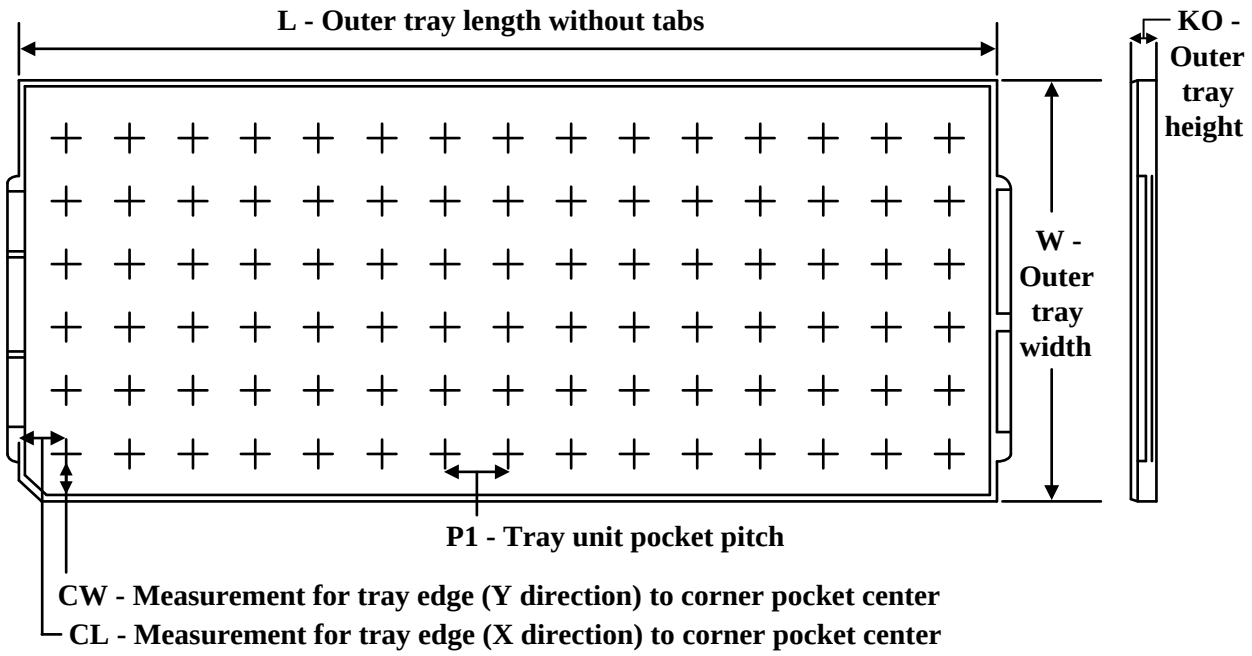

Chamfer on Tray corner indicates Pin 1 orientation of packed units.

*All dimensions are nominal

Device	Package Name	Package Type	Pins	SPQ	Unit array matrix	Max temperature (°C)	L (mm)	W (mm)	K0 (µm)	P1 (mm)	CL (mm)	CW (mm)
CP3BT26Y98NEP/ NOPB	PGE	LQFP	144	60	5 X 12	150	322.6	135.9	7620	25.4	17.8	17.55
CP3BT26Y98NEP/ NOPB.B	PGE	LQFP	144	60	5 X 12	150	322.6	135.9	7620	25.4	17.8	17.55

PGE (S-PQFP-G144) **PLASTIC QUAD FLATPACK**

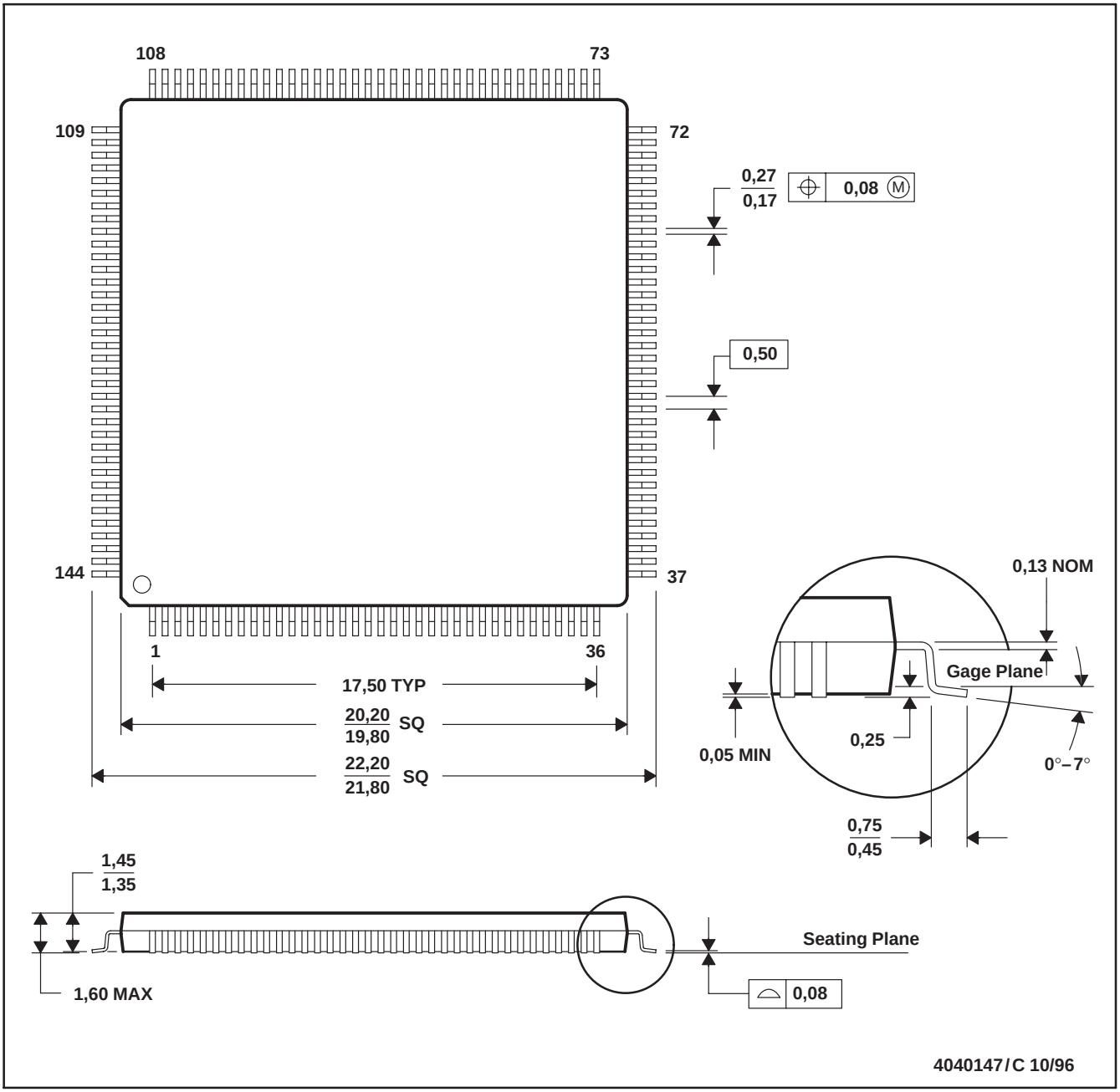

NOTES: A. All linear dimensions are in millimeters.
B. This drawing is subject to change without notice.
C. Falls within JEDEC MS-026

IMPORTANT NOTICE AND DISCLAIMER

TI PROVIDES TECHNICAL AND RELIABILITY DATA (INCLUDING DATASHEETS), DESIGN RESOURCES (INCLUDING REFERENCE DESIGNS), APPLICATION OR OTHER DESIGN ADVICE, WEB TOOLS, SAFETY INFORMATION, AND OTHER RESOURCES “AS IS” AND WITH ALL FAULTS, AND DISCLAIMS ALL WARRANTIES, EXPRESS AND IMPLIED, INCLUDING WITHOUT LIMITATION ANY IMPLIED WARRANTIES OF MERCHANTABILITY, FITNESS FOR A PARTICULAR PURPOSE OR NON-INFRINGEMENT OF THIRD PARTY INTELLECTUAL PROPERTY RIGHTS.

These resources are intended for skilled developers designing with TI products. You are solely responsible for (1) selecting the appropriate TI products for your application, (2) designing, validating and testing your application, and (3) ensuring your application meets applicable standards, and any other safety, security, regulatory or other requirements.

These resources are subject to change without notice. TI grants you permission to use these resources only for development of an application that uses the TI products described in the resource. Other reproduction and display of these resources is prohibited. No license is granted to any other TI intellectual property right or to any third party intellectual property right. TI disclaims responsibility for, and you fully indemnify TI and its representatives against any claims, damages, costs, losses, and liabilities arising out of your use of these resources.

TI’s products are provided subject to TI’s Terms of Sale, TI’s General Quality Guidelines, or other applicable terms available either on ti.com or provided in conjunction with such TI products. TI’s provision of these resources does not expand or otherwise alter TI’s applicable warranties or warranty disclaimers for TI products. Unless TI explicitly designates a product as custom or customer-specified, TI products are standard, catalog, general purpose devices.

TI objects to and rejects any additional or different terms you may propose.

Copyright © 2026, Texas Instruments Incorporated

Last updated 10/2025