LM25180 42-V_{IN} PSR Flyback DC/DC Converter with 65-V, 1.5-A Integrated Power MOSFET

1 Features

- Designed for reliable and rugged applications
  - Wide input voltage range of 4.5 V to 42 V with operation down to 3.5 V after start-up
  - Robust solution with only one component crossing the isolation barrier
  - ±1.5% total output regulation accuracy
  - Optional V_{OUT} temperature compensation
  - 6-ms internal or programmable soft start
  - Input UVLO and thermal shutdown protection
  - Hiccup-mode overcurrent fault protection
  - –40°C to +150°C junction temperature range
- Integration reduces solution size and cost
  - Integrated 65-V, 0.4-Ω power MOSFET
  - No opto-coupler or transformer auxiliary winding required for V_{OUT} regulation
  - Internal loop compensation
- High-efficiency PSR flyback operation
  - Quasi-resonant MOSFET turn-off in BCM
  - Low input quiescent current
  - External bias option for improved efficiency
  - Single- and multi-output implementations
- Ultra-low conducted and radiated EMI signatures
  - Soft switching avoids diode reverse recovery
  - Optimized for CISPR 32 EMI requirements
- Create a custom regulator design using WEBENCH® Power Designer

2 Applications

- Isolated field transmitters and field actuators
- Multi-output rails for analog input modules
- Motor drives: IGBT and SiC gate drive supplies
- Building automation HVAC systems
- Isolated bias supplies

3 Description

The LM25180 is a primary-side regulated (PSR) flyback converter with high efficiency over a wide input voltage range of 4.5 V to 42 V. The isolated output voltage is sampled from the primary-side flyback voltage, eliminating the need for an optocoupler, voltage reference, or third winding from the transformer for output voltage regulation.

The high level of integration results in a simple, reliable and high-density design with only one component crossing the isolation barrier. Boundary conduction mode (BCM) switching enables a compact magnetic solution and better than ±1.5% load and line regulation performance. An integrated 65-V power MOSFET provides output power up to 7 W with enhanced headroom for line transients.

The LM25180 flyback converter is available in a 8-pin, 4-mm × 4-mm, thermally-enhanced WSON package with 0.8-mm pin pitch.

Device Information(1)

PART NUMBER	PACKAGE	BODY SIZE (NOM)
LM25180	WSON (8)	4.00 mm × 4.00 mm

(1) For all available packages, see the orderable addendum at the end of the data sheet.

Typical Application

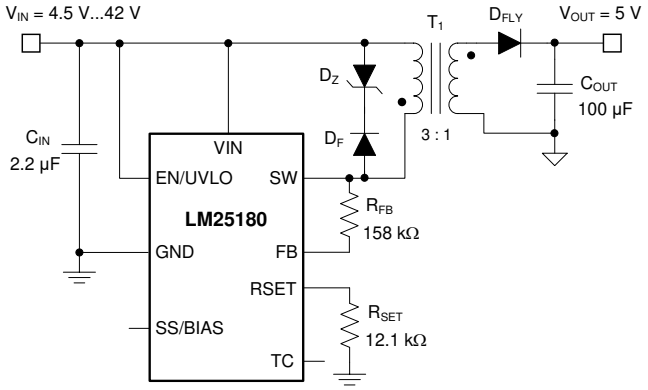

Typical Efficiency, V_{OUT} = 5 V

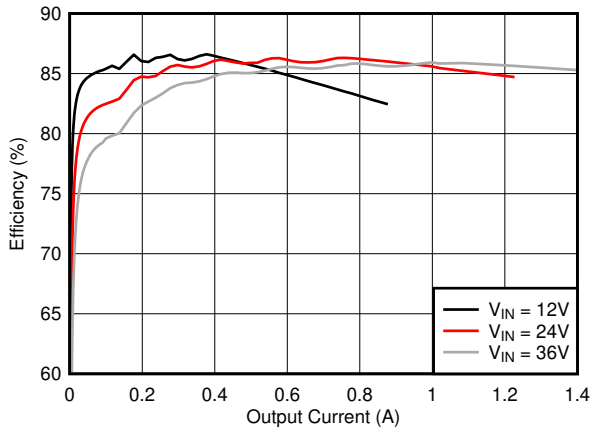

An IMPORTANT NOTICE at the end of this data sheet addresses availability, warranty, changes, use in safety-critical applications, intellectual property matters and other important disclaimers. PRODUCTION DATA.

Table of Contents

1 **Features** ... 1
2 **Applications** ... 1
3 **Description** ... 1
4 **Revision History** ... 2
5 **Description (continued)** ... 2
6 **Pin Configuration and Functions** ... 3
7 **Specifications** ... 4
7.1 Absolute Maximum Ratings ... 4
7.2 ESD Ratings ... 4
7.3 Recommended Operating Conditions ... 4
7.4 Thermal Information ... 4
7.5 Electrical Characteristics ... 5
7.6 Typical Characteristics ... 6
8 **Detailed Description** ... 9
8.1 Overview ... 9
8.2 Functional Block Diagram ... 9
8.3 Feature Description ... 9
8.4 Device Functional Modes ... 15
9 **Application and Implementation** ... 16
9.1 Application Information ... 16
9.2 Typical Applications ... 16
10 **Power Supply Recommendations** ... 32
11 **Layout** ... 33
11.1 Layout Guidelines ... 33
11.2 Layout Examples ... 34
12 **Device and Documentation Support** ... 35
12.1 Device Support ... 35
12.2 Documentation Support ... 36
12.3 Receiving Notification of Documentation Updates 36
12.4 Support Resources ... 36
12.5 Trademarks ... 36
12.6 Electrostatic Discharge Caution ... 37
12.7 Glossary ... 37
13 **Mechanical, Packaging, and Orderable Information** ... 37

4 Revision History

NOTE: Page numbers for previous revisions may differ from page numbers in the current version.

Changes from Revision A (July 2019) to Revision B	Page
• Added EMI bullet in *Features*	1
• Added magnetic components in *Table 3*	17
• Added expressions for UVLO turn-on/off voltage thresholds in *Typical Applications*	20
• Updated *Layout Examples*	34
• Added PSR flyback converter family in *Device and Documentation Support*	35
• Updated *Documentation Support*	36

Changes from Original (November 2018) to Revision A	Page
• Changed EC table specs for current limit	4
• Added note about failsafe current limit	14

5 Description (continued)

The LM25180 flyback converter simplifies implementation of isolated DC/DC supplies with optional features to optimize performance for the target end equipment. The output voltage is set by one resistor, while an optional resistor improves output voltage accuracy by negating the thermal coefficient of the flyback diode voltage drop. Additional features include an internally-fixed or externally-programmable soft start, optional bias supply connection for higher efficiency, precision enable input with hysteresis for adjustable line UVLO, hiccup-mode overload protection, and thermal shutdown protection with automatic recovery.

Copyright © 2018–2020, Texas Instruments Incorporated

6 Pin Configuration and Functions

NGU Package
8-Pin WSON With Wettable Flanks
Top View

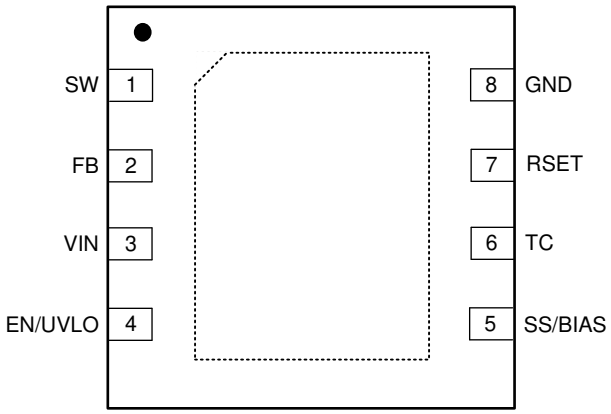

Pin Functions

PIN		I/O (1)	DESCRIPTION
NO.	NAME		
1	SW	P	Switch node that is internally connected to the drain of the N-channel power MOSFET. Connect to the primary-side switching terminal of the flyback transformer.
2	FB	I	Primary side feedback pin. Connect a resistor from FB to SW. The ratio of the FB resistor to the resistor at the RSET pin sets the output voltage.
3	VIN	P/I	Input supply connection. Source for internal bias regulators and input voltage sensing pin. Connect directly to the input supply of the converter with short, low impedance paths.
4	EN/UVLO	I	Enable input and undervoltage lockout (UVLO) programming pin. If the EN/UVLO voltage is below 1.1 V, the converter is in shutdown mode with all functions disabled. If the EN/UVLO voltage is greater than 1.1 V and below 1.5 V, the converter is in standby mode with the internal regulator operational and no switching. If the EN/UVLO voltage is above 1.5 V, the start-up sequence begins.
5	SS/BIAS	I	Soft start or bias input. Connect a capacitor from SS/BIAS to GND to adjust the output start-up time and input inrush current. If SS/BIAS is left open, the internal 6-ms soft-start timer is activated. Connect an external supply to SS/BIAS to supply bias to the internal voltage regulator and enable internal soft start.
6	TC	I	Temperature compensation pin. Tie a resistor from TC to RSET to compensate for the temperature coefficient of the forward voltage drop of the secondary diode, thus improving regulation at the secondary-side output.
7	RSET	I	Reference resistor tied to GND to set the reference current for FB. Connect a 12.1-kΩ resistor from RSET to GND.
8	GND	G	Analog and power ground. Ground connection of internal control circuits and power MOSFET.
-	DAP	G	Die attach pad. Connect to PCB ground plane.

(1) P = Power, G = Ground, I = Input, O = Output

Copyright © 2018–2020, Texas Instruments Incorporated

7 Specifications

7.1 Absolute Maximum Ratings

Over the recommended operating junction temperature range of –40°C to 150°C (unless otherwise noted)

		MIN	MAX	UNIT
Input voltage	VIN to GND	–0.3	45	V
	EN/UVLO to GND	–0.3	45	
	TC to GND	–0.3	6	
	SS/BIAS to GND	–0.3	14	
	FB to GND	–0.3	45.3	
	FB to VIN	–0.3	0.3	
	RSET to GND	–0.3	3	
Output voltage	SW to GND	–1.5	70	V
	SW to GND (20-ns transient)	–3		
Operating junction temperature, T_J		–40	150	°C
Storage temperature, T_{stg}		–55	150	°C

7.2 ESD Ratings

			VALUE	UNIT
$V_{(ESD)}$	Electrostatic discharge	Human body model (HBM), per ANSI/ESDA/JEDEC JS-001, all pins(1) HBM ESD Classification Level 2	±2000	V
		Charged device model (CDM), per JEDEC specification JESD22-C101, all pins(2) CDM ESD Classification Level C4B	±500	

(1) JEDEC document JEP155 states that 500-V HBM allows safe manufacturing with a standard ESD control process.
(2) JEDEC document JEP157 states that 250-V CDM allows safe manufacturing with a standard ESD control process.

7.3 Recommended Operating Conditions

Over the recommended operating junction temperature range of –40°C to 150°C (unless otherwise noted)

		MIN	NOM	MAX	UNIT
V_{IN}	Input voltage after turn on	4.5		42	V
V_{SW}	SW voltage			65	V
$V_{EN/UVLO}$	EN/UVLO voltage			42	V
$V_{SS/BIAS}$	SS/BIAS voltage			13	V
T_J	Operating junction temperature	–40		150	°C

7.4 Thermal Information

THERMAL METRIC(1)		LM25180 NGU (WSON) 8 PINS	UNIT
$R_{\Theta JA}$	Junction-to-ambient thermal resistance	41.3	°C/W
$R_{\Theta JC(top)}$	Junction-to-case (top) thermal resistance	34.7	°C/W
$R_{\Theta JB}$	Junction-to-board thermal resistance	19.1	°C/W
Ψ_{JT}	Junction-to-top characterization parameter	0.3	°C/W
Ψ_{JB}	Junction-to-board characterization parameter	19.2	°C/W
$R_{\Theta JC(bot)}$	Junction-to-case (bottom) thermal resistance	3.2	°C/W

(1) For more information about traditional and new thermal metrics, see the *Semiconductor and IC Package Thermal Metrics* application report.

Copyright © 2018–2020, Texas Instruments Incorporated

7.5 Electrical Characteristics

Typical values correspond to T_J = 25°C. Minimum and maximum limits aaply over the full –40°C to 150°C junction temperature range unless otherwise indicated. V_{IN} = 24 V and $V_{EN/UVLO}$ = 2 V unless otherwise stated.

PARAMETER		TEST CONDITIONS	MIN	TYP	MAX	UNIT
SUPPLY CURRENT						
$I_{SHUTDOWN}$	VIN shutdown current	$V_{EN/UVLO}$ = 0 V		3		µA
I_{ACTIVE}	VIN active current	$V_{EN/UVLO}$ = 2.5 V, V_{RSET} = 1.8 V		260	350	µA
$I_{ACTIVE-BIAS}$	VIN current with BIAS connected	$V_{SS/BIAS}$ = 6 V		25	40	µA
$V_{SD-FALLING}$	Shutdown threshold	$V_{EN/UVLO}$ falling	0.3			V
ENABLE AND INPUT UVLO						
$V_{SD-RISING}$	Standby threshold	$V_{EN/UVLO}$ rising		0.8	1	V
$V_{UV-RISING}$	Enable threshold	$V_{EN/UVLO}$ rising	1.45	1.5	1.53	V
$V_{UV-HYST}$	Enable voltage hysteresis	$V_{EN/UVLO}$ falling	0.04	0.05		V
$I_{UV-HYST}$	Enable current hysteresis	$V_{EN/UVLO}$ = 1.6 V	4.2	5	5.5	µA
FEEDBACK						
I_{RSET}	RSET current	R_{RSET} = 12.1 kΩ		100		µA
V_{RSET}	RSET regulation voltage	R_{RSET} = 12.1 kΩ	1.191	1.21	1.224	V
$V_{FB-VIN1}$	FB to VIN voltage	I_{FB} = 80 µA	–40			mV
$V_{FB-VIN2}$	FB to VIN voltage	I_{FB} = 120 µA			40	mV
SWITCHING FREQUENCY						
F_{SW-MIN}	Minimum switching frequency			12		kHz
F_{SW-MAX}	Maximum switching frequency			350		kHz
t_{ON-MIN}	Minimum switch on-time			140		ns
DIODE THERMAL COMPENSATION						
V_{TC}	TC voltage	I_{TC} = ±10 µA, T_J = 25°C		1.2	1.27	V
POWER SWITCHES						
$R_{DS(on)}$	MOSFET on-state resistance	I_{SW} = 100 mA		0.4		Ω
SOFT-START AND BIAS						
I_{SS}	SS ext capacitor charging current			5		µA
t_{SS}	Internal SS time			6		ms
$V_{BIAS-UVLO-RISE}$	BIAS enable voltage	$V_{SS/BIAS}$ rising		5.5	5.75	V
$V_{BIAS-UVLO-HYST}$	BIAS UVLO hysteresis	$V_{SS/BIAS}$ falling		190		mV
CURRENT LIMIT						
$I_{SW-PEAK}$	Peak current limit threshold		1.23	1.5	1.73	A
THERMAL SHUTDOWN						
T_{SD}	Thermal shutdown threshold	T_J rising		175		°C
T_{SD-HYS}	Thermal shutdown hysteresis			6		°C

Copyright © 2018–2020, Texas Instruments Incorporated

7.6 Typical Characteristics

V_{IN} = 24 V, $V_{EN/UVLO}$ = 2 V (unless otherwise stated).

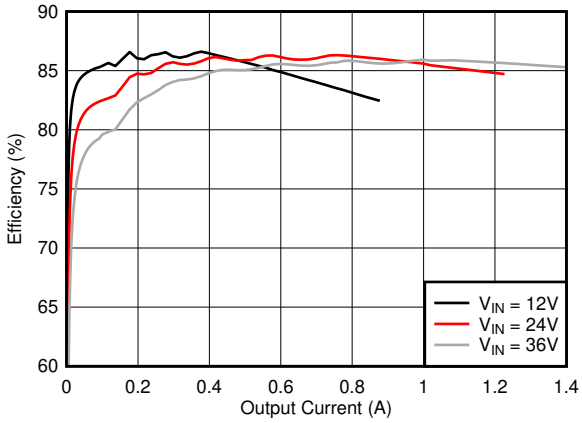

See Figure 23

Figure 1. Efficiency versus Load

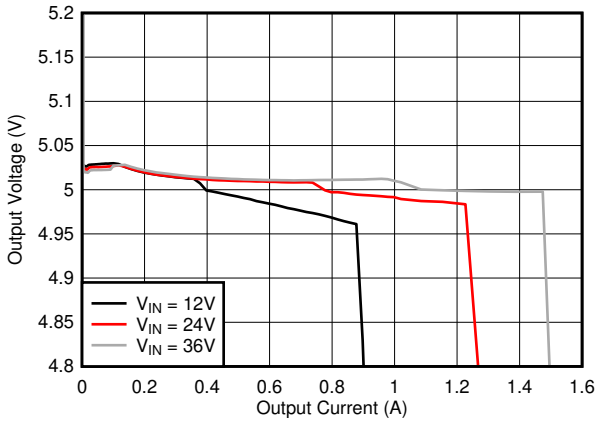

See Figure 23

Figure 2. Output Voltage versus Load

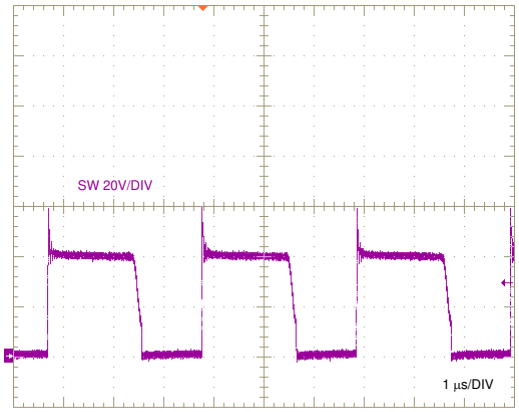

See Figure 23 I_{OUT} = 1 A

Figure 3. Primary-side Switching Waveform in BCM

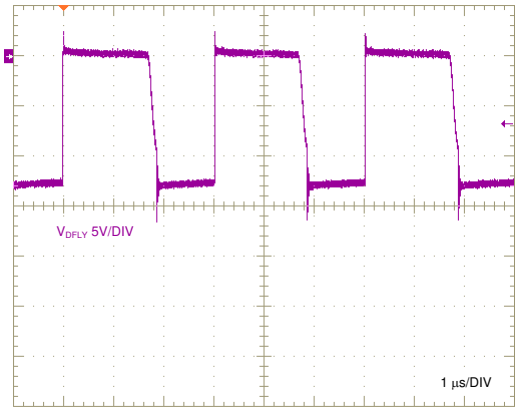

See Figure 23 I_{OUT} = 1 A

Figure 4. Flyback Diode Switching Waveform in BCM

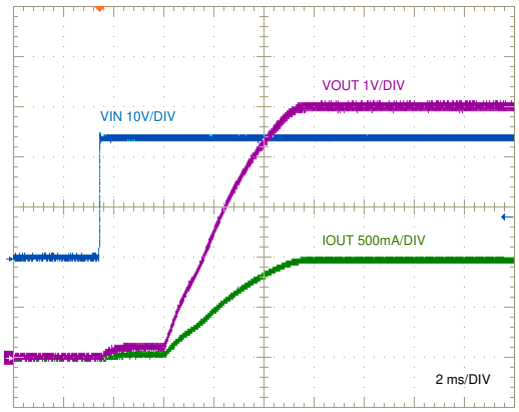

See Figure 23

Figure 5. Start-up Characteristic

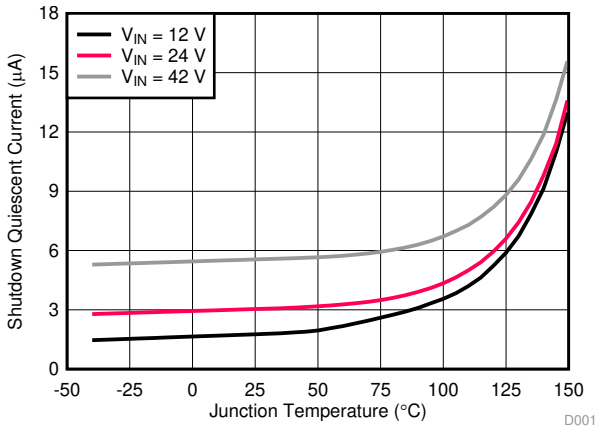

Figure 6. Shutdown Quiescent Current versus Temperature

Copyright © 2018–2020, Texas Instruments Incorporated

Typical Characteristics (continued)

V_{IN} = 24 V, $V_{EN/UVLO}$ = 2 V (unless otherwise stated).

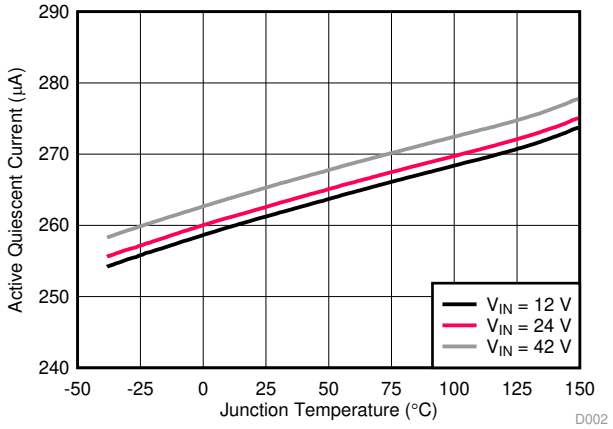

Figure 7. Active Quiescent Current versus Temperature

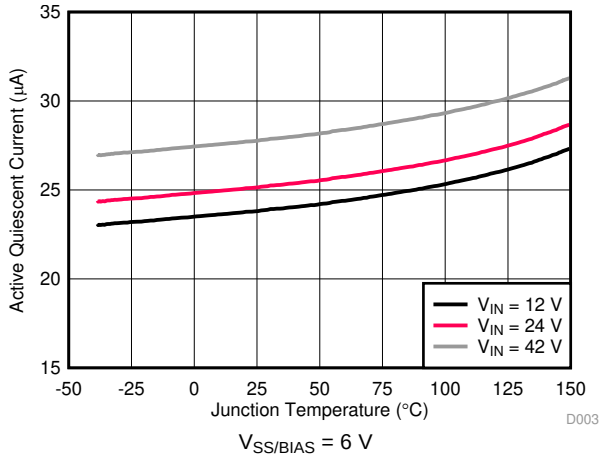

Figure 8. Active Quiescent Current with BIAS versus Temperature

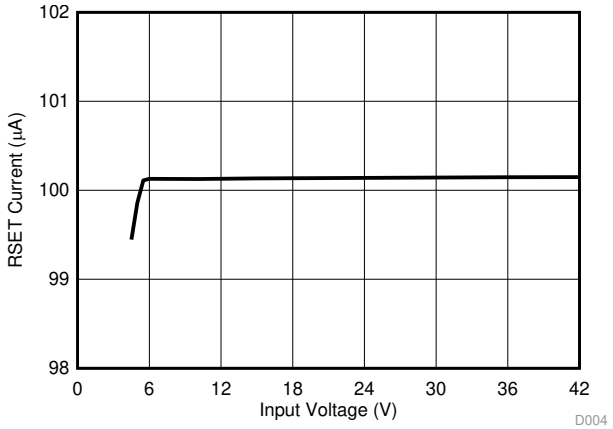

Figure 9. RSET Current versus Input Voltage

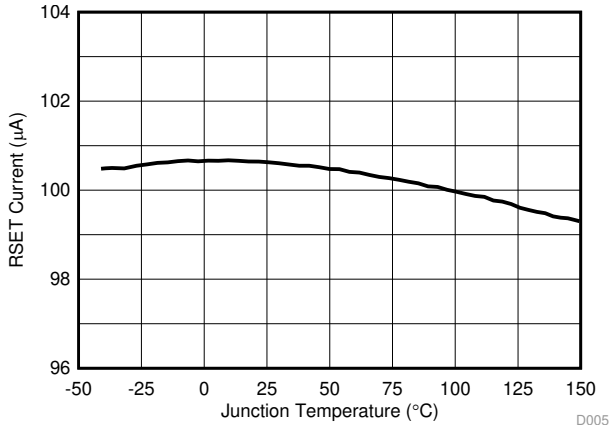

Figure 10. RSET Current versus Temperature

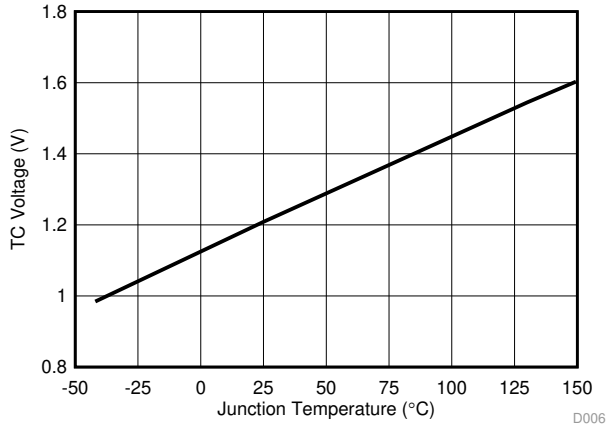

Figure 11. TC Voltage versus Temperature

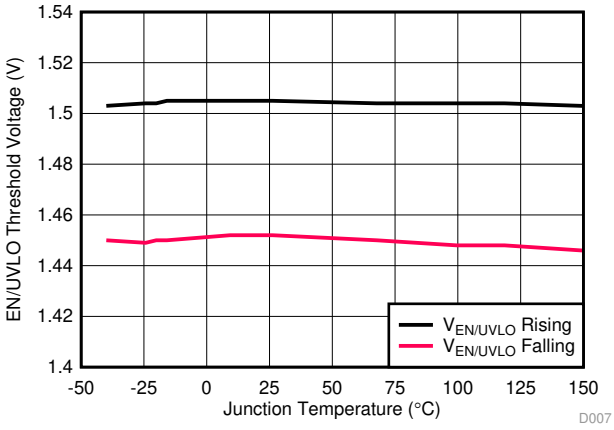

Figure 12. EN/UVLO Threshold Voltages versus Temperature

Typical Characteristics (continued)

V_{IN} = 24 V, $V_{EN/UVLO}$ = 2 V (unless otherwise stated).

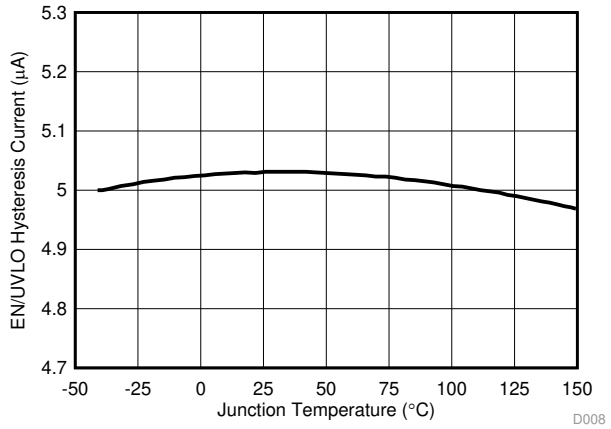

Figure 13. EN/UVLO Hysteresis Current versus Temperature

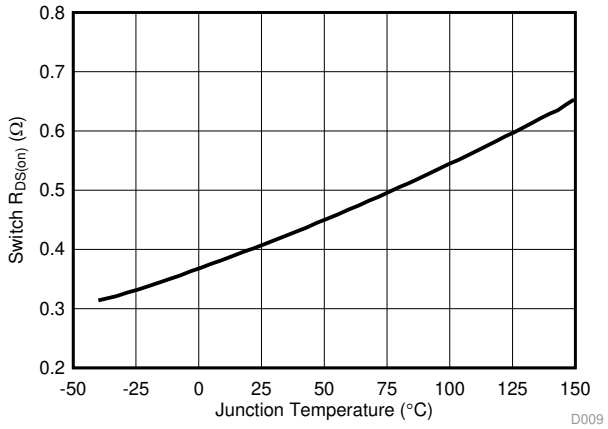

Figure 14. MOSFET $R_{DS(on)}$ versus Temperature

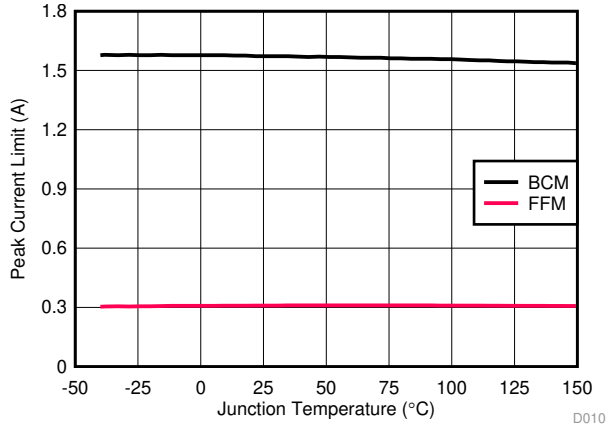

Figure 15. Switch Peak Current Limits versus Temperature

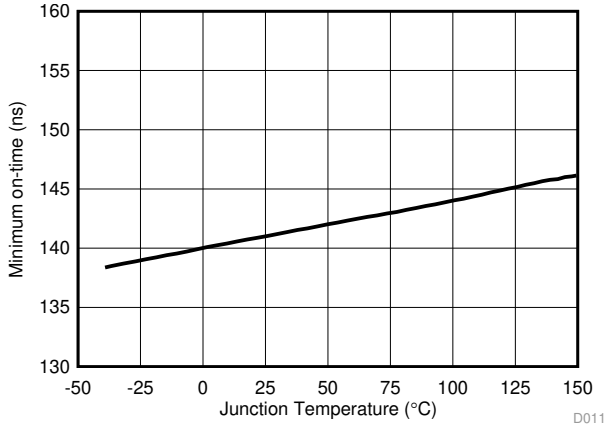

Figure 16. Minimum Switch On-Time versus Temperature

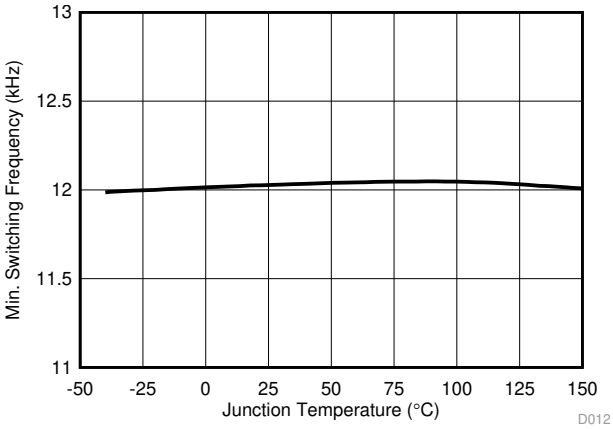

Figure 17. Minimum Switching Frequency versus Temperature

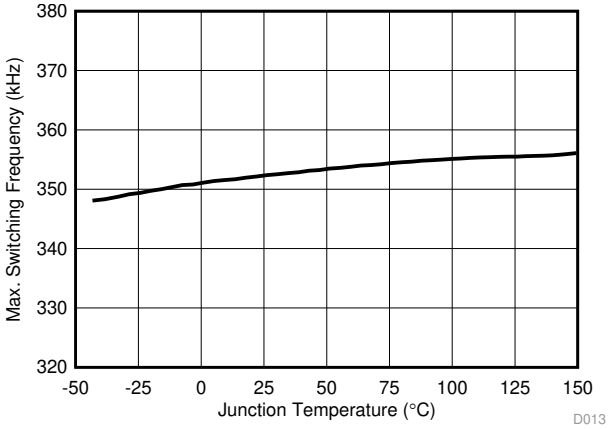

Figure 18. Maximum Switching Frequency versus Temperature

Copyright © 2018–2020, Texas Instruments Incorporated

8 Detailed Description

8.1 Overview

The LM25180 primary-side regulated (PSR) flyback converter is a high-density, cost-effective solution for industrial systems requiring less than 7 W of isolated DC/DC power. This compact, easy-to-use flyback converter with low I_Q can be applied over a wide input voltage range from 4.5 V to 42 V, with operation down to 3.5 V after start-up. Innovative frequency and current amplitude modulation enables high conversion efficiency across the entire load and line range. Primary-side regulation of the isolated output voltage using sampled values of the primary winding voltage eliminates the need for an opto-coupler or an auxiliary transformer winding for feedback. Regulation performance that rivals that of traditional opto-coupler solutions is achieved without the associated cost, solution size, and reliability concerns. The LM25180 converter services a wide range of applications including IGBT-based motor drives, factory automation, and medical equipment.

8.2 Functional Block Diagram

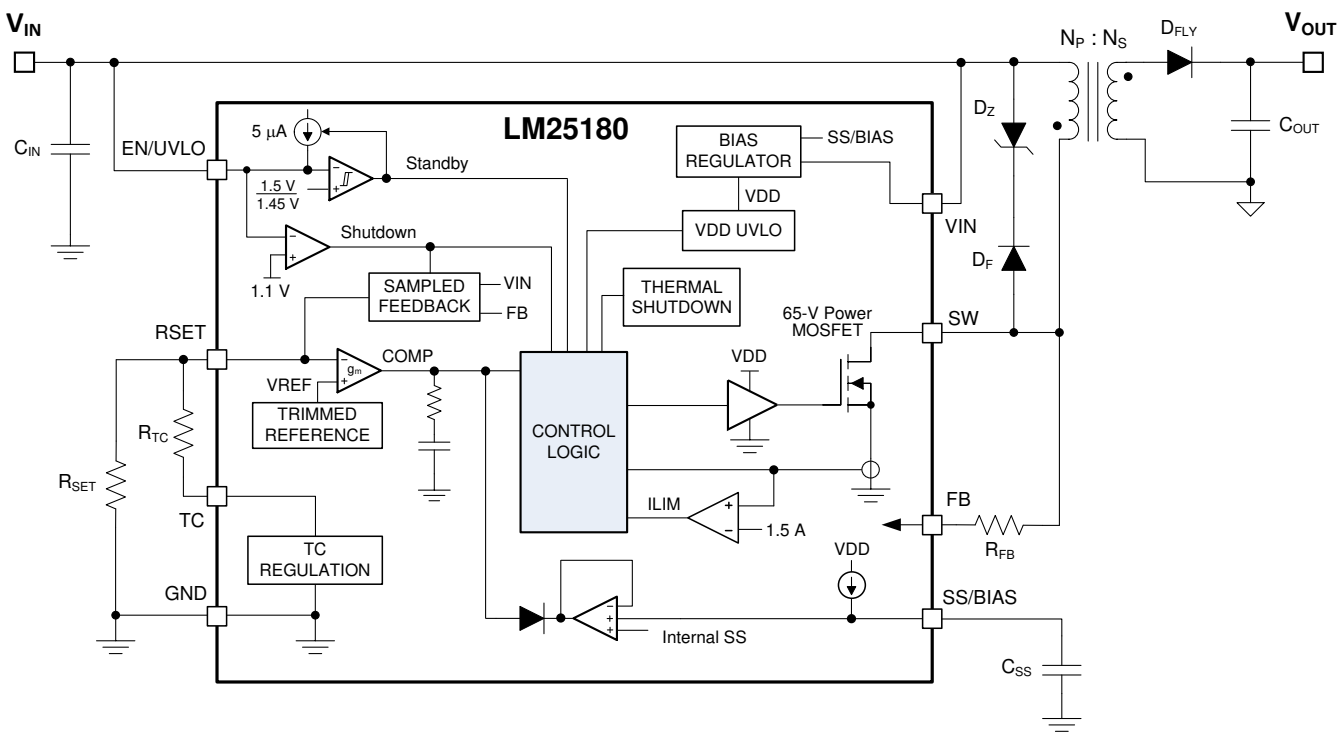

8.3 Feature Description

8.3.1 Integrated Power MOSFET

The LM25180 is a flyback dc/dc converter with integrated 65-V, 1.5-A N-channel power MOSFET. During the MOSFET on-time, the transformer primary current increases from zero with slope V_{IN} / L_{MAG} (where L_{MAG} is the transformer primary-referred magnetizing inductance) while the output capacitor supplies the load current. When the high-side MOSFET is turned off by the control logic, the SW voltage V_{SW} swings up to approximately V_{IN} + (N_{PS} × V_{OUT}), where N_{PS} = N_P/N_S is the primary-to-secondary turns ratio of the transformer. The magnetizing current flows in the secondary side through the flyback diode, charging the output capacitor and supplying current to the load. Duty cycle D is defined as t_{ON} / t_{SW}, where t_{ON} is the MOSFET conduction time and t_{SW} is the switching period.

Figure 19 shows a typical schematic of the LM25180 PSR flyback circuit. Components denoted in red are optional depending on the application requirements.

Feature Description (continued)

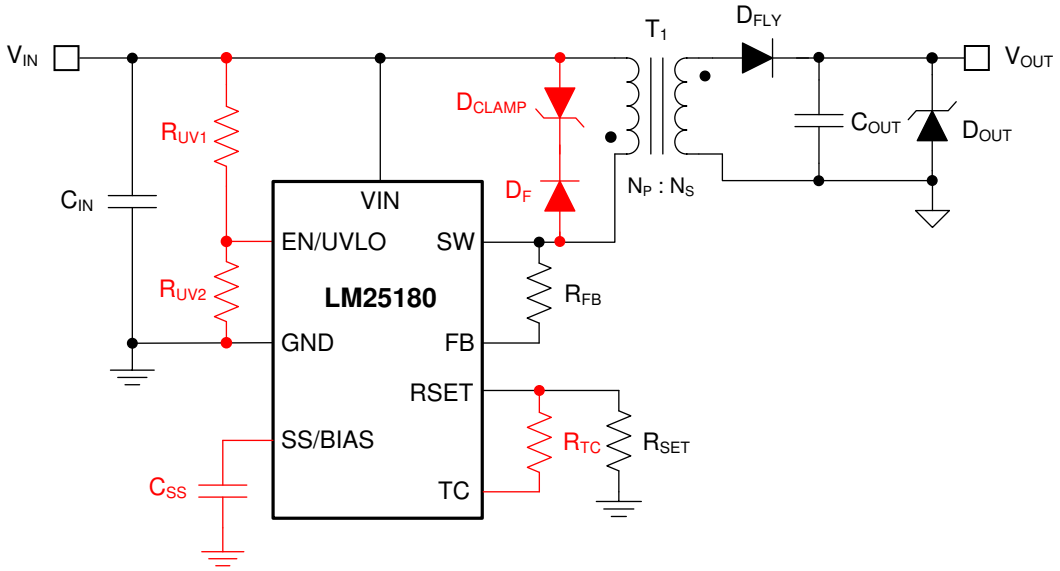

Figure 19. LM25180 Flyback Converter Schematic (Optional Components in Red)

8.3.2 PSR Flyback Modes of Operation

The LM25180 uses a variable-frequency, peak current-mode (VFPCM) control architecture with three possible modes of operation as illustrated in Figure 20.

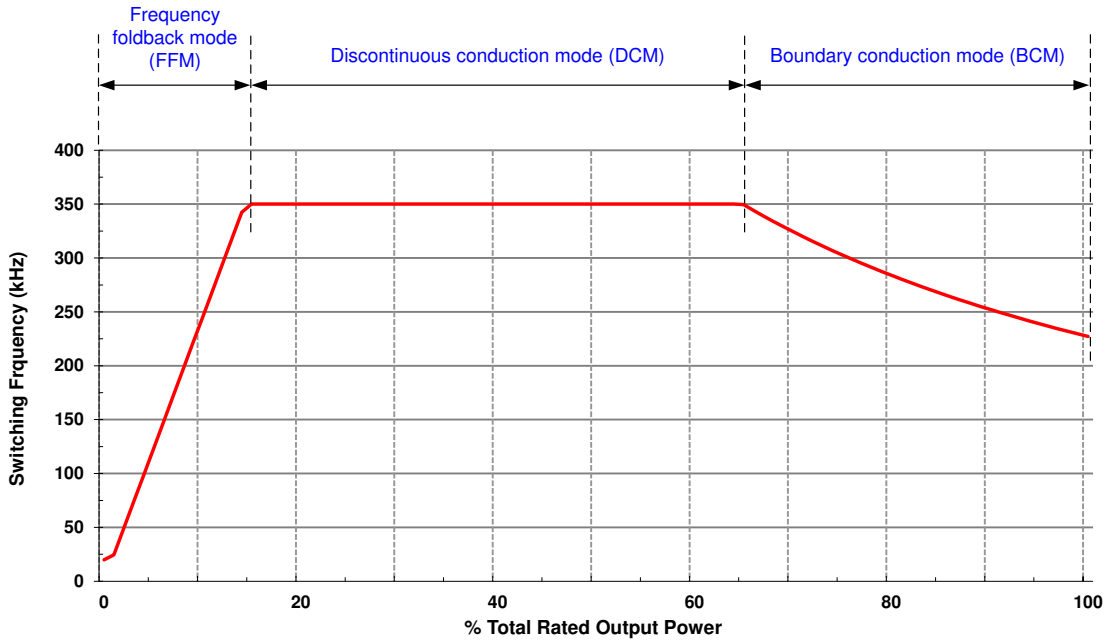

Figure 20. Three Modes of Operation Illustrated by Variation of Switching Frequency With Load

Copyright © 2018–2020, Texas Instruments Incorporated

Feature Description (continued)

The LM25180 operates in boundary conduction mode (BCM) at heavy loads. The power MOSFET turns on when the current in the secondary winding reaches zero, and the MOSFET turns off when the peak primary current reaches the level dictated by the output of the internal error amplifier. As the load is decreased, the frequency increases in order to maintain BCM operation. The duty cycle of the flyback converter is given Equation 1, where V_D is the forward voltage drop of the flyback diode as its current approaches zero.

$$D = \frac{\left(V_{OUT} + V_D\right) \cdot N_{PS}}{V_{IN} + \left(V_{OUT} + V_D\right) \cdot N_{PS}} \tag{1}$$

The output power in BCM is given by Equation 2, where the applicable switching frequency and peak primary current in BCM are specified by Equation 3 and Equation 4, respectively.

$$P_{OUT(BCM)} = \frac{L_{MAG} \cdot I_{PRI\text{-}PK(BCM)}^{2}}{2} \cdot F_{SW(BCM)} \tag{2}$$

$$F_{SW(BCM)} = \frac{1}{I_{PRI\text{-}PK(BCM)} \cdot \left(\frac{L_{MAG}}{V_{IN}} + \frac{L_{MAG}}{N_{PS} \cdot \left(V_{OUT} + V_D\right)}\right)} \tag{3}$$

$$I_{PRI\text{-}PK(BCM)} = \frac{2 \cdot \left(V_{OUT} + V_D\right) \cdot I_{OUT}}{V_{IN} \cdot D} \tag{4}$$

As the load decreases, the LM25180 clamps the maximum switching frequency to 350 kHz, and the converter enters discontinuous conduction mode (DCM). The power delivered to the output in DCM is proportional to the peak primary current squared as given by Equation 5 and Equation 6. Thus, as the load decreases, the peak current reduces to maintain regulation at 350-kHz switching frequency.

$$P_{OUT(DCM)} = \frac{L_{MAG} \cdot I_{PRI\text{-}PK(DCM)}^{2}}{2} \cdot F_{SW(DCM)} \tag{5}$$

$$I_{PRI\text{-}PK(DCM)} = \sqrt{\frac{2 \cdot I_{OUT} \cdot \left(V_{OUT} + V_D\right)}{L_{MAG} \cdot F_{SW(DCM)}}} \tag{6}$$

$$D_{DCM} = \frac{L_{MAG} \cdot I_{PRI\text{-}PK(DCM)} \cdot F_{SW(DCM)}}{V_{IN}} \tag{7}$$

At even lighter loads, the primary-side peak current set by the internal error amplifier decreases to a minimum level of 0.3 A, or 20% of its 1.5-A peak value, and the MOSFET off-time extends to maintain the output load requirement. The system operates in frequency foldback mode (FFM), and the switching frequency decreases as the load current is reduced. Other than a fault condition, the lowest frequency of operation of the LM25180 is 12 kHz, which sets a minimum load requirement of approximately 0.5% full load.

8.3.3 Setting the Output Voltage

To minimize output voltage regulation error, the LM25180 senses the reflected secondary voltage when the secondary current reaches zero. The feedback (FB) resistor, which is connected between SW and FB as shown in Figure 19, is determined using Equation 8, where R_{SET} is nominally 12.1 kΩ.

$$R_{FB} = \left(V_{OUT} + V_D\right) \cdot N_{PS} \cdot \frac{R_{SET}}{V_{REF}} \tag{8}$$

Feature Description (continued)

8.3.3.1 Diode Thermal Compensation

The LM25180 employs a unique thermal compensation circuit that adjusts the feedback setpoint based on the thermal coefficient of the flyback diode's forward voltage drop. Even though the output voltage is measured when the secondary current is effectively zero, there is still a non-zero forward voltage drop associated with the flyback diode. Select the thermal compensation resistor using Equation 9.

$$R_{TC}\left[k\Omega\right] = \frac{R_{FB}\left[k\Omega\right]}{N_{PS}} \cdot \frac{3}{TC_{Diode}\left[mV/°C\right]} \tag{9}$$

The temperature coefficient of the diode voltage drop may not be explicitly provided in the diode datasheet, so the effective value can be estimated based on the measured output voltage shift over temperature when the TC resistor is not installed.

8.3.4 Control Loop Error Amplifier

The inputs of the error amplifier include a level-shifted version of the FB voltage and an internal 1.21-V reference set by the resistor at RSET. A type-II internal compensation network stabilizes the converter. In BCM operation when the output voltage is in regulation, an on-time interval is initiated when the secondary current reaches zero. The power MOSFET is subsequently turned off when an amplified version of the peak primary current exceeds the error amplifier output.

8.3.5 Precision Enable

The precision EN/UVLO input supports adjustable input undervoltage lockout (UVLO) with hysteresis for application specific power-up and power-down requirements. EN/UVLO connects to a comparator with a 1.5-V reference voltage and 50-mV hysteresis. An external logic signal can be used to drive the EN/UVLO input to toggle the output on and off for system sequencing or protection. The simplest way to enable the LM25180 is to connect EN/UVLO directly to V_{IN}. This allows the LM25180 to start up when V_{IN} is within its valid operating range. However, many applications benefit from using a resistor divider R_{UV1} and R_{UV2} as shown in Figure 21 to establish a precision UVLO level.

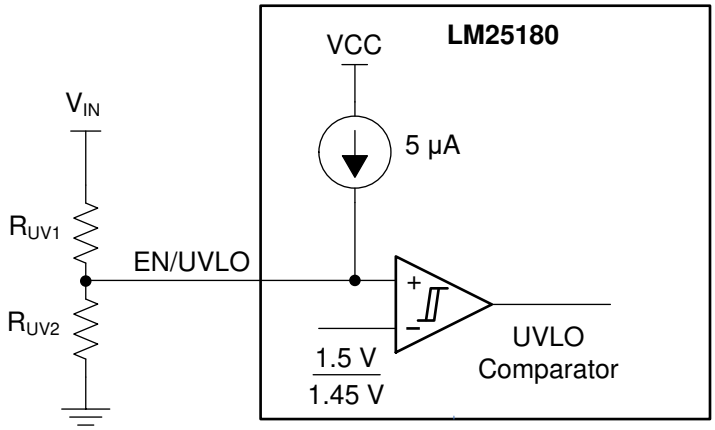

Figure 21. Programmable Input Voltage UVLO With Hysteresis

Use Equation 10 and Equation 11 to calculate the input UVLO voltages turn-on and turn-off voltages, respectively, where $V_{UV\text{-}RISING}$ and $V_{UV\text{-}FALLING}$ are the UVLO comparator thresholds and $I_{UV\text{-}HYST}$ is the hysteresis current.

$$V_{IN(on)} = V_{UV\text{-}RISING}\left(1 + \frac{R_{UV1}}{R_{UV2}}\right) \tag{10}$$

Copyright © 2018–2020, Texas Instruments Incorporated

Feature Description (continued)

$$V_{IN(off)} = V_{UV\text{-}FALLING}\left(1+\frac{R_{UV1}}{R_{UV2}}\right) - I_{UV\text{-}HYST} \cdot R_{UV1} \tag{11}$$

The LM25180 also provides a low-I_Q shutdown mode when the EN/UVLO voltage is pulled below a base-emitter voltage drop (approximately 0.6 V at room temperature). If the EN/UVLO voltage is below this hard shutdown threshold, the internal LDO regulator powers off, and the internal bias-supply rail collapses, shutting down the bias currents of the LM25180. The LM25180 operates in standby mode when the EN/UVLO voltage is between the hard shutdown and precision-enable thresholds.

8.3.6 Configurable Soft Start

The LM25180 has a flexible and easy-to-use soft-start control pin, SS/BIAS. The soft-start feature prevents inrush current impacting the LM25180 and the input supply when power is first applied. This is achieved by controlling the voltage at the output of the internal error amplifier. Soft start is achieved by slowly ramping up the target regulation voltage when the device is first enabled or powered up. Selectable and adjustable start-up timing options include a 6-ms internally-fixed soft start and an externally-programmable soft start.

The simplest way to use the LM25180 is to leave SS/BIAS open. The LM25180 employs an internal soft-start control ramp and starts up to the regulated output voltage in 6 ms.

However, in applications with a large amount of output capacitance, higher V_{OUT} or other special requirements, the soft-start time can be extended by connecting an external capacitor C_{SS} from SS/BIAS to GND. A longer soft-start time further reduces the supply current needed to charge the output capacitors while sourcing the required load current. When the EN/UVLO voltage exceeds the UVLO rising threshold and a delay of 20 µs expires, an internal current source I_{SS} of 5 µA charges C_{SS} and generates a ramp to control the primary current amplitude. Calculate the soft-start capacitance for a desired soft-start time, t_{SS}, using Equation 12.

$$C_{SS}\left[nF\right] = 5 \cdot t_{SS}\left[ms\right] \tag{12}$$

C_{SS} is discharged by an internal FET when switching is disabled by EN/UVLO or thermal shutdown.

8.3.7 External Bias Supply

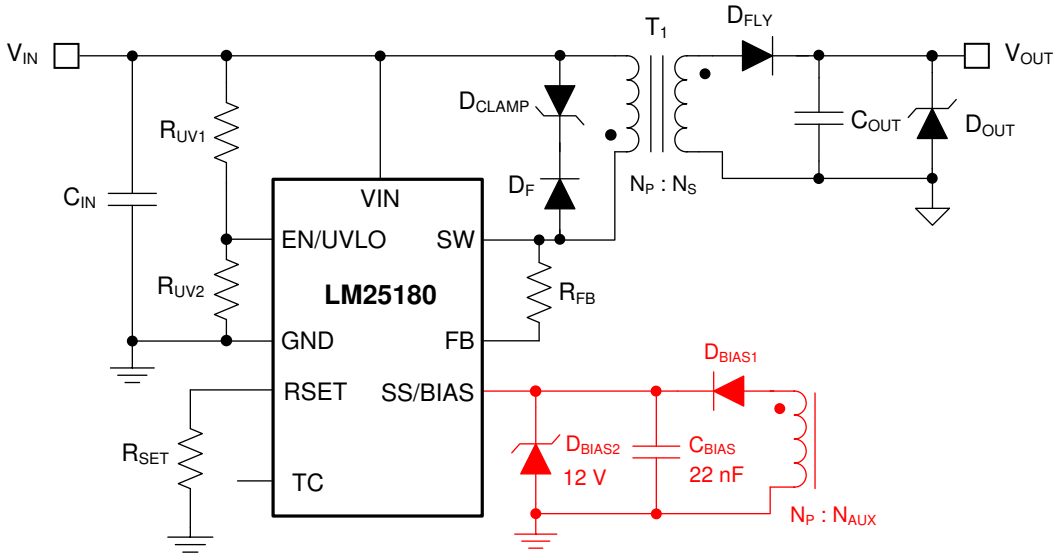

Figure 22. External Bias Supply Using Transformer Auxiliary Winding

Feature Description (continued)

The LM25180 has an external bias supply feature that reduces input quiescent current and increases efficiency. When the voltage at SS/BIAS exceeds a rising threshold of 5.5 V, bias power for the internal LDO regulator can be derived from an external voltage source or from a transformer auxiliary winding as shown in Figure 22. With a bias supply connected, the LM25180 then uses its internal soft-start ramp to control the primary current during start-up.

When using a transformer auxiliary winding for bias power, the total leakage current related to diodes D_{BIAS1} and D_{BIAS2} in Figure 22 should be less than 1 µA across the full operating temperature range.

8.3.8 Minimum On-Time and Off-Time

When the internal power MOSFET is turned off, the leakage inductance of the transformer resonates with the SW node parasitic capacitance. The resultant ringing behavior can be excessive with large transformer leakage inductance and may corrupt the secondary zero-current detection. In order to prevent such a situation, a minimum switch off-time, designated as $t_{OFF\text{-}MIN}$, of maximum 450 ns is set internally to ensure proper functionality. This sets a lower limit for the transformer magnetizing inductance as discussed in the *Detailed Design Procedure*.

Furthermore, noise effects as a result of power MOSFET turn-on can impact the internal current sense circuit measurement. To mitigate this effect, the LM25180 provides a blanking time after the MOSFET turns on. This blanking time forces a minimum on-time, $t_{ON\text{-}MIN}$, of 140 ns.

8.3.9 Overcurrent Protection

In case of an overcurrent condition on the isolated output(s), the output voltage drops lower than the regulation level since the maximum power delivered is limited by the peak current capability on the primary side. The peak primary current is maintained at 1.5 A (plus an amount related to the 100-ns propagation delay of the current limit comparator) until the output decreases to the secondary diode voltage drop to impact the reflected signal on the primary side. At this point, the LM25180 assumes the output cannot be recovered and re-calibrates its switching frequency to 9 kHz until the overload condition is removed. The LM25180 responds with similar behavior to an output short circuit condition.

For a given input voltage, Equation 13 gives the maximum output current prior to the engagement of overcurrent protection. The typical threshold value for $I_{SW\text{-}PEAK}$ from the *Specifications* is 1.5 A.

$$I_{OUT(max)} = \frac{\eta}{2} \cdot \frac{I_{SW\text{-}PEAK}}{\left(\frac{V_{OUT}}{V_{IN}} + \frac{1}{N_{PS}}\right)} \tag{13}$$

A failsafe current limit set at 2.4 A, or 1.6 times the nominal peak current limit, provides redundant fault protection in case of transformer short circuit or saturation effects. This initiates a 7.5-ms hiccup interval after eight overcurrent events.

8.3.10 Thermal Shutdown

Thermal shutdown is an integrated self-protection to limit junction temperature and prevent damage related to overheating. Thermal shutdown turns off the device when the junction temperature exceeds 175°C to prevent further power dissipation and temperature rise. Junction temperature decreases after shutdown, and the restarts when the junction temperature falls to 169°C.

Copyright © 2018–2020, Texas Instruments Incorporated

8.4 Device Functional Modes

8.4.1 Shutdown Mode

EN/UVLO facilitates ON and OFF control for the LM25180. When $V_{EN/UVLO}$ is below approximately 0.6 V, the device is in shutdown mode. Both the internal LDO and the switching regulator are off. The quiescent current in shutdown mode drops to 3 μA at V_{IN} = 24 V. The LM25180 also employs internal bias rail undervoltage protection. If the internal bias supply voltage is below its UV threshold, the converter remains off.

8.4.2 Standby Mode

The internal bias rail LDO regulator has a lower enable threshold than the converter itself. When $V_{EN/UVLO}$ is above 0.6 V and below the precision-enable threshold (1.5 V typically), the internal LDO is on and regulating. The precision enable circuitry is turned on once the internal VCC is above its UV threshold. The switching action and voltage regulation are not enabled until $V_{EN/UVLO}$ rises above the precision enable threshold.

8.4.3 Active Mode

The LM25180 is in active mode when $V_{EN/UVLO}$ is above the precision-enable threshold and the internal bias rail is above its UV threshold. The LM25180 operates in one of three modes depending on the load current requirement:

1. Boundary conduction mode (BCM) at heavy loads.
2. Discontinuous conduction mode (DCM) at medium loads.
3. Frequency foldback mode (FFM) at light loads.

Refer to *PSR Flyback Modes of Operation* for more detail.

9 Application and Implementation

NOTE

Information in the following applications sections is not part of the TI component specification, and TI does not warrant its accuracy or completeness. TI's customers are responsible for determining suitability of components for their purposes. Customers should validate and test their design implementation to confirm system functionality.

9.1 Application Information

The LM25180 requires only a few external components to convert from a wide range of supply voltages to one or more isolated output rails. To expedite and streamline the process of designing of a LM25180-based converter, a comprehensive LM25180 quick-start calculator is available for download to assist the designer with component selection for a given application. WEBENCH® online software is also available to generate complete designs, leveraging iterative design procedures and access to comprehensive component databases. The following sections discuss the design procedure for both single- and dual-output implementations using specific circuit design examples.

As mentioned previously, the LM25180 also integrates several optional features to meet system design requirements, including precision enable, input UVLO, programmable soft start, output voltage thermal compensation, and external bias supply connection. Each application incorporates these features as needed for a more comprehensive design.

The application circuits detailed in *Typical Applications* show LM25180 configuration options suitable for several application use cases. Refer to the *LM5180EVM-S05* and *LM5180EVM-DUAL* EVM user's guides for more detail.

9.2 Typical Applications

For step-by-step design procedures, circuit schematics, bill of materials, PCB files, simulation and test results of LM25180-powered implementations, refer to the *TI reference designs* library.

9.2.1 Design 1: Wide V_{IN}, Low I_Q PSR Flyback Converter Rated at 5 V, 1 A

The schematic diagram of a 5-V, 1-A PSR flyback converter is given in Figure 23.

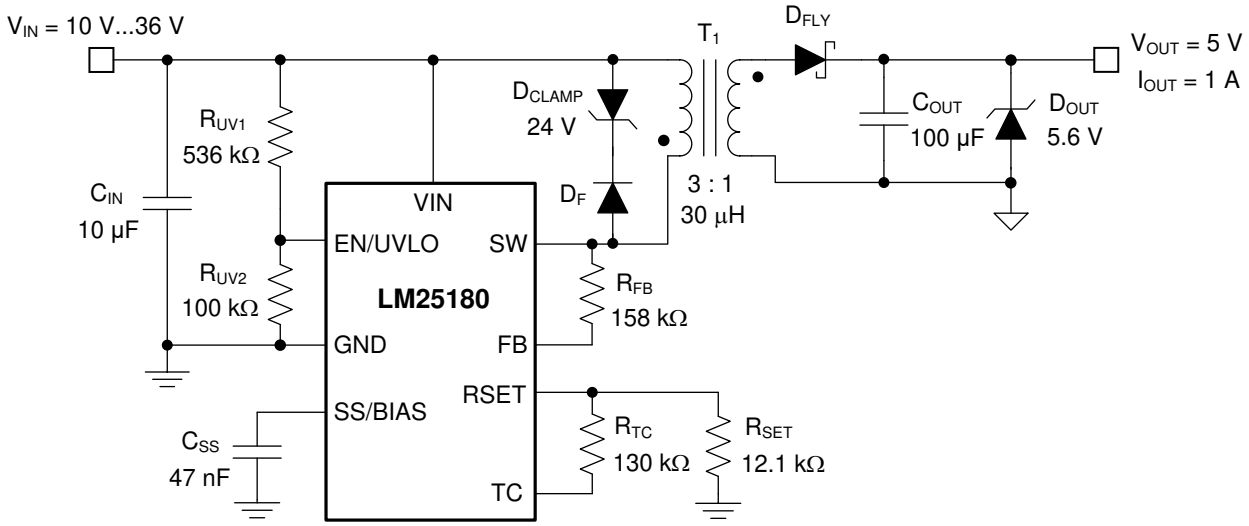

Figure 23. Schematic for Design 1 With $V_{IN(nom)}$ = 24 V, V_{OUT} = 5 V, I_{OUT} = 1 A

Copyright © 2018–2020, Texas Instruments Incorporated

9.2.1.1 Design Requirements

The required input, output, and performance parameters for this application example are shown in Table 1.

Table 1. Design Parameters

DESIGN PARAMETER	VALUE
Input voltage range	10 V to 36 V
Input UVLO thresholds	9.5 V on, 6.5 V off
Output voltage	5 V
Rated load current, V_{IN} = 24 V	1 A
Output voltage regulation	±1.5%
Output voltage ripple	< 100 mV

The target full-load efficiency is 86% based on a nominal input voltage of 24 V and an isolated output voltage of 5 V. The LM25180 is chosen to deliver a fixed 5-V output voltage set by resistor R_{FB} connected between the SW and FB pins. The input voltage turn-on and turn-off thresholds are established by R_{UV1} and R_{UV2}. The required components are listed in Table 2. Transformers for other single-output designs are listed in Table 3.

Table 2. List of Components for Design 1

REF DES	QTY	SPECIFICATION	VENDOR	PART NUMBER
C_{IN}	1	10 µF, 50 V, X7R, 1210, ceramic	Taiyo Yuden	UMK325AB7106KM-T
C_{OUT}	1	100 µF, 6.3 V, X7S, 1210, ceramic	Murata	GRM32EC70J107ME15
			Taiyo Yuden	JMK325AC7107MM-P
		100 µF, 6.3 V, X5R, 1210, ceramic	TDK	C3225X5R0J107M250AC
			Würth Electronik	885012109004
C_{SS}	1	47 nF, 16 V, X7R, 0402	Std	Std
D_{CLAMP}	1	Zener, 24 V, 1 W, PowerDI-123	DFLZ24-7	Diodes Inc.
D_F	1	Switching diode, 75 V, 0.25 A, SOD-323	CMDD4448	Central Semi
D_{FLY}	1	Schottky diode, 40 V, 2 A, SOD-123	FSV340FP	ONsemi
D_{OUT}	1	Zener, 5.6 V, 5%, SOD-523	BZX585-C5V6	Nexperia
R_{FB}	1	158 kΩ, 1%, 0402	Std	Std
R_{SET}	1	12.1 kΩ, 1%, 0402	Std	Std
R_{TC}	1	130 kΩ, 1%, 0402	Std	Std
R_{UV1}	1	536 kΩ, 1%, 0603	Std	Std
R_{UV2}	1	100 kΩ, 1%, 0402	Std	Std
T_1	1	30 µH, 2 A, turns ratio 3 : 1, 9.3 × 10.2 mm	Coilcraft	YA8779-BL
			Würth Electronik	750317605
		30 µH, 2.6 A, turns ratio 3 : 1, 12.5 × 15.5 mm	Sumida	12387-T151
		40 µH, 2 A, turns ratio 3 : 1, 13.3 × 15.2 mm	Würth Electronik	750313974
U_1	1	LM25180 PSR flyback converter, VSON-8	Texas Instruments	LM25180NGUR

Table 3. Magnetic Components for Other Single-Output Designs

OUTPUT VOLTAGE RANGE	TURNS RATIO	L_{MAG}, I_{SAT}	DIMENSIONS	VENDOR	PART NUMBER
4 V to 8 V	2 : 1	30 µH, 2 A	9.3 × 10.2 × 10.6 mm	Coilcraft	YA9033-AL
8 V to 11 V	1.5 : 1				YA9034-AL
12 V to 18 V	1 : 1				YA9035-AL
18 V to 36 V	1 : 2				YA9036-AL
36 V to 55 V	1 : 3				YA9037-AL

9.2.1.2 Detailed Design Procedure

9.2.1.2.1 Custom Design With WEBENCH® Tools

Click here to create a custom design using the LM25180 device with WEBENCH® Power Designer.

1. Start by entering the input voltage (V_{IN}), output voltage (V_{OUT}), and output current (I_{OUT}) requirements.
2. Optimize the design for key parameters such as efficiency, footprint, and cost using the optimizer dial.
3. Compare the generated design with other possible solutions from Texas Instruments.

The WEBENCH Power Designer provides a customized schematic along with a list of materials with real-time pricing and component availability.

In most cases, these actions are available:

- Run electrical simulations to see important waveforms and circuit performance
- Run thermal simulations to understand board thermal performance
- Export customized schematic and layout into popular CAD formats
- Print PDF reports for the design, and share the design with colleagues

Get more information about WEBENCH tools at www.ti.com/WEBENCH.

9.2.1.2.2 Custom Design With Excel Quickstart Tool

Select components based on the converter specifications using the LM25180 quick-start calculator.

9.2.1.2.3 Flyback Transformer – T_1

Choose a turns ratio based on an approximate 60% max duty cycle at minimum input voltage using Equation 14, rounding up or down as needed.

$$N_{PS} = \frac{D_{MAX}}{1 - D_{MAX}} \cdot \frac{V_{IN(min)}}{V_{OUT} + V_D} = \frac{0.6}{1 - 0.6} \cdot \frac{10\,V}{5\,V + 0.3\,V} = 3 \tag{14}$$

Select a magnetizing inductance based on the minimum off-time constraint using Equation 15. Choose a value of 30 µH to allow some margin for this application. Specify a saturation current of 2 A, above the maximum switch current specification of the LM25180.

$$L_{MAG} \geq \frac{(V_{OUT} + V_D) \cdot N_{PS} \cdot t_{OFF\text{-}MIN}}{I_{SW\text{-}PEAK(FFM)}} = \frac{(5\,V + 0.3\,V) \cdot 3 \cdot 450\,ns}{0.3\,A} = 24\,\mu H \tag{15}$$

Note that a higher magnetizing inductance provides a larger operating range for BCM and FFM, but the leakage inductance may increase based on a higher number of primary turns, N_P. The primary and secondary winding RMS currents are given by Equation 16 and Equation 17, respectively.

$$I_{PRI\text{-}RMS} = \sqrt{\frac{D}{3}} \cdot I_{PRI\text{-}PK} \tag{16}$$

$$I_{SEC\text{-}RMS} = \sqrt{\frac{2 \cdot I_{OUT} \cdot I_{PRI\text{-}PK} \cdot N_{PS}}{3}} \tag{17}$$

Find the maximum output current for a given turns ratio using Equation 18, where the typical value for $I_{SW\text{-}PEAK}$ is the 1.5-A switch current peak threshold. Iterate by increasing the turns ratio if the output current capability is too low at minimum input voltage.

$$I_{OUT(max)} = \frac{\eta}{2} \cdot \frac{I_{SW\text{-}PEAK}}{\left(\frac{V_{OUT}}{V_{IN}} + \frac{1}{N_{PS}}\right)} = \frac{0.85}{2} \cdot \frac{1.5\,A}{\left(\frac{5\,V}{V_{IN}} + \frac{1}{3}\right)} = \begin{cases} 0.85\,A \text{ at } V_{IN} = 12\,V \\ 1.2\,A \text{ at } V_{IN} = 24\,V \end{cases} \tag{18}$$

Copyright © 2018–2020, Texas Instruments Incorporated

9.2.1.2.4 Flyback Diode – D_{FLY}

The flyback diode reverse voltage is given by Equation 19.

$$V_{D\text{-}REV} \geq \frac{V_{IN(max)}}{N_{PS}} + V_{OUT} = \frac{36\,V}{3} + 5\,V = 17\,V \tag{19}$$

Select a 40-V, 3-A Schottky diode for this application to account for inevitable diode voltage overshoot and ringing related to the resonance of transformer leakage inductance and diode parasitic capacitance. Connect an appropriate RC snubber circuit (for example, 100 Ω and 22 pF) across the flyback diode if needed, particularly if the transformer leakage inductance is high. Also, choose a flyback diode with current rating that aligns with the maximum peak secondary winding current of N_{PS}*$I_{SW\text{-}PEAK}$. As mentioned in Layout, place adequate copper at the cathode of the diode to improve its thermal performance and prevent overheating during high ambient temperature or overload conditions. Beware of the high leakage current typical of a Schottky diode at elevated operating temperatures.

9.2.1.2.5 Zener Clamp Circuit – D_F, D_{CLAMP}

Connect a diode-Zener clamping circuit across the primary winding to limit the peak switch-node voltage after MOSFET turn-off below the maximum level of 65 V, as given by Equation 20.

$$V_{DZ(clamp)} < V_{SW(max)} - V_{IN(max)} \tag{20}$$

Choosing the zener, D_{CLAMP}, with clamp voltage of approximately 1.5 times the reflected output voltage, as specified by Equation 21, provides a balance between the maximum switch voltage excursion and the leakage inductance demagnetization time.

$$V_{DZ(clamp)} = 1.5 \cdot N_{PS} \cdot \left(V_{OUT} + V_D\right) = 1.5 \cdot 3 \cdot \left(5\,V + 0.3\,V\right) \approx 24\,V \tag{21}$$

Select an ultra-fast switching diode or Schottky diode for D_F with rated voltage greater than the maximum input voltage and with low forward recovery voltage drop.

9.2.1.2.6 Output Capacitor – C_{OUT}

The output capacitor determines the voltage ripple at the converter output, limits the voltage excursion during a load transient, and sets the dominant pole of the converter's small-signal response. For a flyback converter specifically, the output capacitor supplies the load current when the main switch is on, and therefore the output voltage ripple is a function of load current and duty cycle.

Select an output capacitance using Equation 22 to limit the ripple voltage amplitude to less than 1% of the output voltage at minimum input voltage and maximum load.

$$C_{OUT} \geq \frac{L_{MAG} \cdot I_{SW\text{-}PEAK}^{\;2}}{2 \cdot \Delta V_{OUT} \cdot V_{OUT}} \cdot \left(\frac{1+D}{2}\right)^2 = \frac{30\,\mu H \cdot \left(1.5A\right)^2}{2 \cdot 50\,mV \cdot 5\,V} \cdot \left(\frac{1+0.6}{2}\right)^2 = 86\,\mu F \tag{22}$$

Select a 100-µF, 6.3-V capacitor in 1210 case size with X5R or better dielectric. Equation 23 gives the output capacitor RMS ripple current.

$$I_{COUT\text{-}RMS} = I_{OUT} \cdot \sqrt{\frac{2 \cdot N_{PS} \cdot I_{PRI\text{-}PK}}{3 \cdot I_{OUT}} - 1} \tag{23}$$

9.2.1.2.7 Input Capacitor – C_{IN}

Select an input capacitance using Equation 24 to limit the ripple voltage amplitude to less than 5% of the input voltage when operating at nominal input voltage.

$$C_{IN} \geq \frac{I_{PRI\text{-}PK} \cdot D \cdot \left(1 - \frac{D}{2}\right)^2}{2 \cdot F_{SW} \cdot \Delta V_{IN}} \tag{24}$$

Substituting the input current at full load, switching frequency, peak primary current and peak-to-peak ripple specification gives C_{IN} greater than 2 µF. Mindful of the voltage coefficient of ceramic capacitors, select a 10-µF, 50-V ceramic input capacitor with X7R dielectric in 1210 case size. Equation 25 gives the input capacitor RMS ripple current.

$$I_{CIN\text{-}RMS} = \frac{D \cdot I_{PRI\text{-}PK}}{2} \cdot \sqrt{\frac{4}{3 \cdot D} - 1} \tag{25}$$

9.2.1.2.8 Feedback Resistor – R_{FB}

Select a feedback resistor, designated R_{FB}, of 158 kΩ based on the secondary winding voltage at the end of the flyback conduction interval (the sum of the 5-V output voltage and the Schottky diode forward voltage drop) reflected by the transformer turns ratio of 3 : 1. The forward voltage drop of the flyback diode is 0.3 V as its current approaches zero.

$$R_{FB} = \frac{(V_{OUT} + V_D) \cdot N_{PS}}{0.1\,mA} = \frac{(5\,V + 0.3\,V) \cdot 3}{0.1\,mA} = 158\ k\Omega \tag{26}$$

9.2.1.2.9 Thermal Compensation Resistor – R_{TC}

Select a resistor for output voltage thermal compensation, designated R_{TC}, based on Equation 27.

$$R_{TC}\left[k\Omega\right] = \frac{R_{FB}\left[k\Omega\right]}{N_{PS}} \cdot \frac{3}{TC_{Diode}\left[mV/°C\right]} = \frac{158}{3} \cdot \frac{3}{1.2} = 130\ k\Omega \tag{27}$$

9.2.1.2.10 UVLO Resistors – R_{UV1}, R_{UV2}

Given $V_{IN(on)}$ and $V_{IN(off)}$ as the input voltage turn-on and turn-off thresholds of 9.5 V and 6.5 V, respectively, select the upper and lower UVLO resistors using the following expressions:

$$R_{UV1} = \frac{V_{IN(on)} \cdot \frac{V_{UV\text{-}FALLING}}{V_{UV\text{-}RISING}} - V_{IN(off)}}{I_{UV\text{-}HYST}} = \frac{9.5\ V \cdot \frac{1.45\ V}{1.5\ V} - 6.5\ V}{5\ \mu A} = 536 k\Omega \tag{28}$$

$$R_{UV2} = R_{UV1} \cdot \frac{V_{UV\text{-}RISING}}{V_{IN(on)} - V_{UV\text{-}RISING}} = 536\ k\Omega \cdot \frac{1.5\ V}{9.5\ V - 1.5\ V} = 100\ k\Omega \tag{29}$$

Calculate the actual input voltage turn-on and turn-off thresholds as follows:

$$V_{IN(on)} = V_{UV\text{-}RISING}\left(1 + \frac{R_{UV1}}{R_{UV2}}\right) = 1.5\,V\left(1 + \frac{536\ k\Omega}{100 k\Omega}\right) = 9.54\,V \tag{30}$$

$$V_{IN(off)} = V_{UV\text{-}FALLING}\left(1 + \frac{R_{UV1}}{R_{UV2}}\right) - I_{UV\text{-}HYST} \cdot R_{UV1} = 1.45\,V\left(1 + \frac{536 k\Omega}{100 k\Omega}\right) - 5\,\mu A \cdot 536 k\Omega = 6.54\,V \tag{31}$$

9.2.1.2.11 Soft-Start Capacitor – C_{SS}

Connect an external soft-start capacitor for a specific soft-start time. In this example, select a soft-start capacitance of 47 nF based on Equation 12 to achieve a soft-start time of 9 ms.

For technical solutions, industry trends, and insights for designing and managing power supplies, please refer to TI's *Power Management* technical articles.

Copyright © 2018–2020, Texas Instruments Incorporated

9.2.1.3 Application Curves

Unless otherwise stated, application performance curves were taken at T_A = 25°C.

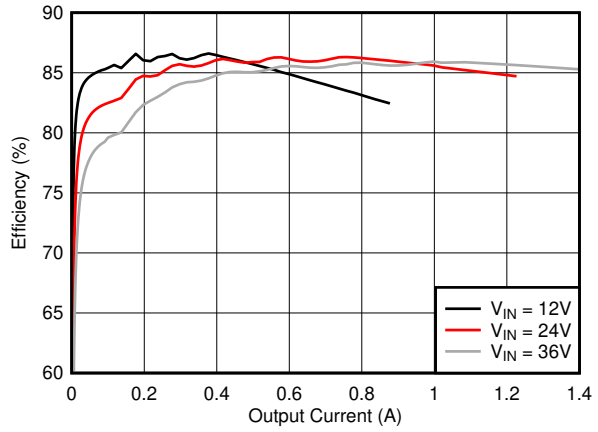

Figure 24. Efficiency (Linear Scale)

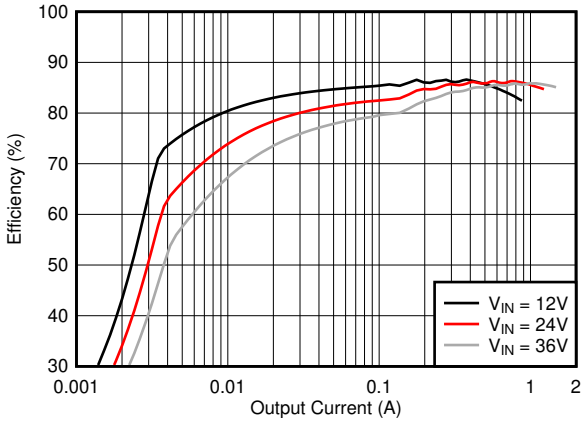

Figure 25. Efficiency (Log Scale)

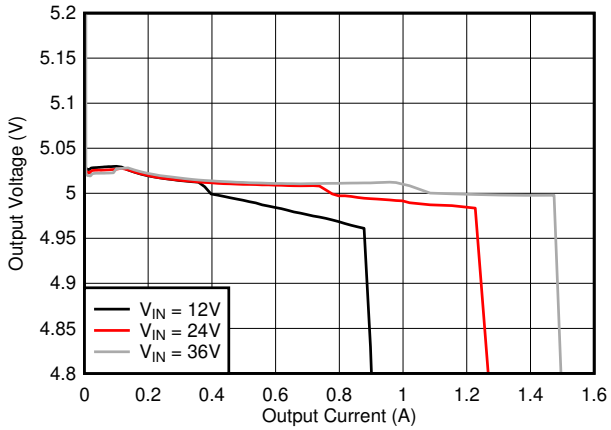

Figure 26. Load Regulation (Linear Scale)

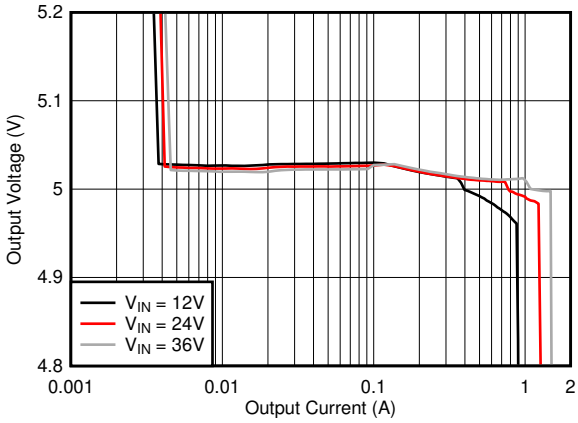

Figure 27. Load Regulation (Log Scale)

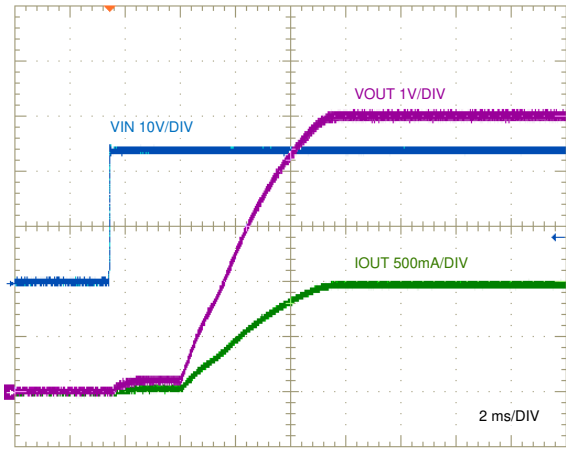

V_{IN} stepped to 24 V 5-Ω Load

Figure 28. Start-up Characteristic

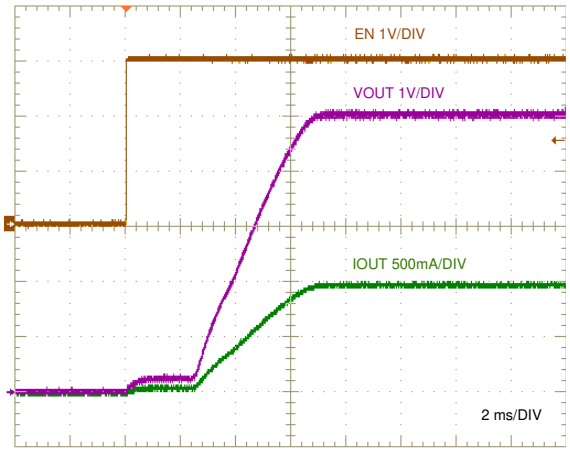

V_{IN} = 24 V 5-Ω Load

Figure 29. Enable ON Characteristic

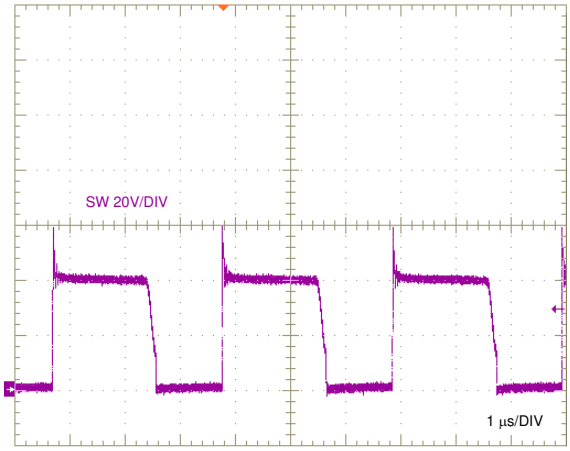

V_{IN} = 24 V I_{OUT} = 1 A

Figure 30. Switch Voltage

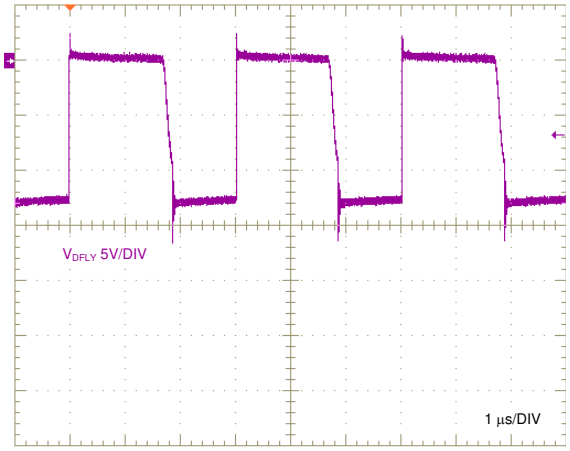

V_{IN} = 24 V I_{OUT} = 1 A

Figure 31. Flyback Diode Voltage

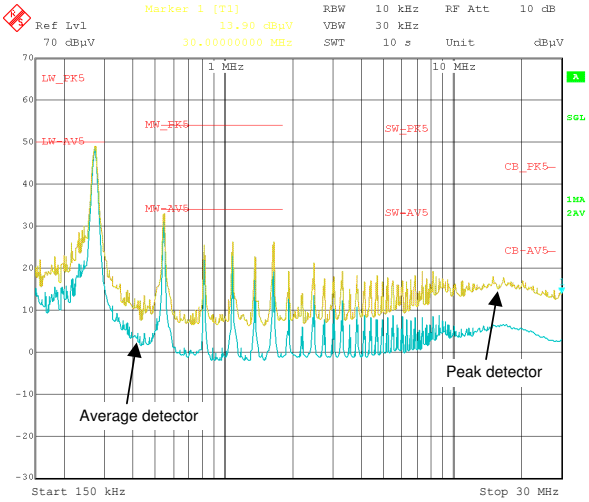

V_{IN} = 24 V
I_{OUT} = 0.85 A

150 kHz to 30 MHz

L_{IN} = 4.7 µH
C_{IN} = 10 µF

Figure 32. CISPR 25 Class 5 Conducted EMI Plot

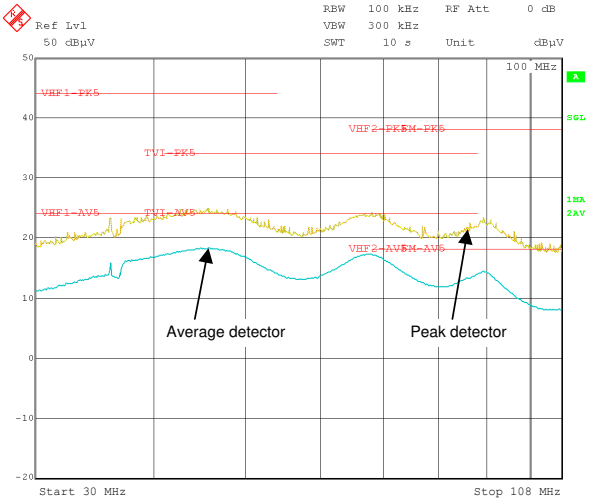

V_{IN} = 24 V
I_{OUT} = 0.85 A

30 MHz to 108 MHz

L_{IN} = 4.7 µH
C_{IN} = 10 µF

Figure 33. CISPR 25 Class 5 Conducted EMI Plot

Copyright © 2018–2020, Texas Instruments Incorporated

9.2.2 Design 2: PSR Flyback Converter With Dual Outputs of 15 V and –7.7 V at 200 mA

The schematic diagram of a dual-output flyback converter intended for isolated IGBT and SiC MOSFET gate drive power supply applications is given in Figure 34.

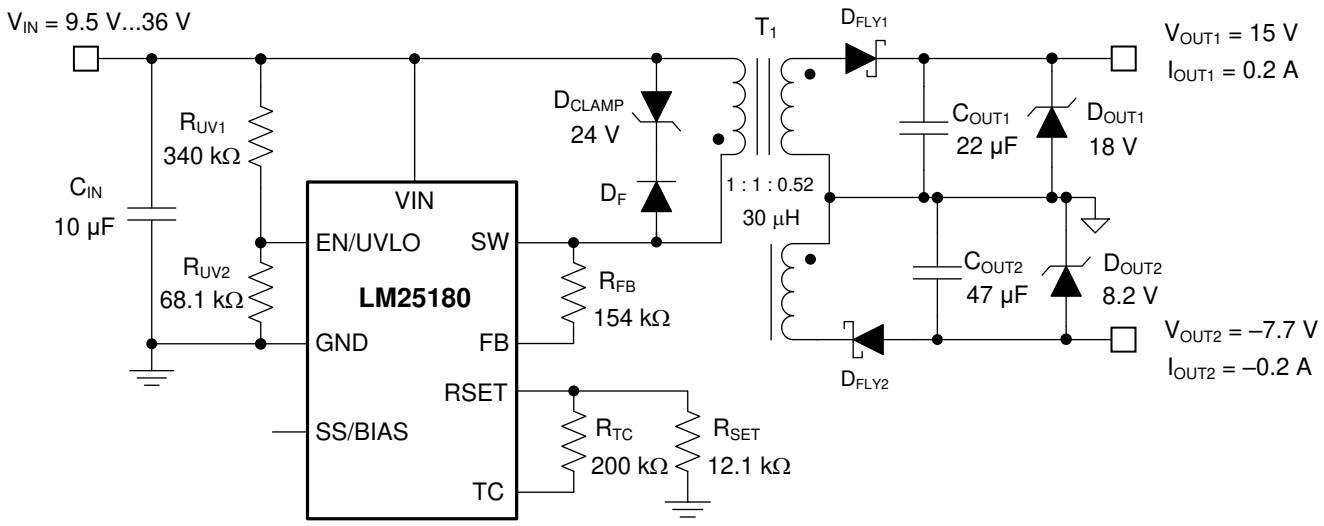

Figure 34. Schematic for Design 2 With $V_{IN(nom)}$ = 24 V, V_{OUT1} = 15 V, V_{OUT2} = –7.7 V, I_{OUT} = 200 mA

9.2.2.1 Design Requirements

The required input, output, and performance parameters for this application example are shown in Table 4.

Table 4. Design Parameters

DESIGN PARAMETER	VALUE
Input voltage range (steady state)	9.5 V to 36 V
Output 1 voltage and current	15 V, 0.2 A
Output 2 voltage and current	–7.7 V, –0.2 A
Input UVLO thresholds	9 V on, 7 V off
Output voltage regulation	±2%

The target full-load efficiency of this LM25180 design is 88% based on a nominal input voltage of 24 V and isolated output voltages of 15 V and –7.7 V sharing a common return. The selected flyback converter components are cited in Table 5, including multi-winding flyback transformer, input and output capacitors, rectifying diodes and flyback converter IC.

Table 5. List of Components for Design 2

REF DES	QTY	SPECIFICATION	VENDOR	PART NUMBER
C_{IN}	1	10 µF, 50 V, X7R, 1210, ceramic	Taiyo Yuden	UMK325AB7106KM-T
C_{OUT1}	1	22 µF, 25 V, X7R, 1210, ceramic	TDK	C3225X7R1E226M
			Murata	GRM32ER71E226KE15L
			Taiyo Yuden	TMK325B7226MM-TR
C_{OUT2}	1	47 µF, 10 V, X7R, 1210, ceramic	TDK	C3225X7R1A476M
			Murata	GRM32ER71A476ME15L
			Taiyo Yuden	LMK325B7476MM-TR
D_{FLY1}	1	Schottky diode, 100 V, 1 A, PowerDI-123	DFLS1100-7	Diodes Inc.
D_{FLY2}	1	Schottky diode, 60 V, 1 A, PowerDI-123	DFLS160-7	Diodes Inc.
D_{CLAMP}	1	Zener, 24 V, 1 W, PowerDI-123	DFLZ24-7	Diodes Inc.
D_F	1	Switching diode, 75 V, 0.3 A, SOD323	1N4148WS	Diodes Inc.
D_{OUT1}	1	Zener, 18 V, 5%, SOD523	BZX585-C18	Nexperia
D_{OUT2}	1	Zener, 8.2 V, 2%, SOD523	BZX585-B8V2	Nexperia
R_{FB}	1	154 kΩ, 1%, 0402	Std	Std
R_{SET}	1	12.1 kΩ, 1%, 0402	Std	Std
R_{TC}	1	200 kΩ, 1%, 0402	Std	Std
R_{UV1}	1	340 kΩ, 1%, 0603	Std	Std
R_{UV2}	1	68.1 kΩ, 1%, 0402	Std	Std
T_1	1	30 µH, 2 A, turns ratio 1 : 1: 0.52, 9 × 10 mm, SMT	Coilcraft	YA8916-BLD
			Würth Electronik	750317595
U_1	1	LM25180 PSR flyback converter, VSON-8	Texas Instruments	LM25180NGUR

9.2.2.2 Detailed Design Procedure

Using the LM25180 quick-start calculator, components are selected based on the flyback converter specifications.

9.2.2.2.1 Flyback Transformer – T_1

Set the turns ratio of the transformer secondary windings using Equation 32, where N_{S1} and N_{S2} are the number of secondary turns for the respective outputs.

$$\frac{N_{S2}}{N_{S1}} = \frac{V_{OUT2} + V_{D2}}{V_{OUT1} + V_{D1}} = \frac{7.7\,V + 0.4\,V}{15\,V + 0.6\,V} = 0.52 \tag{32}$$

Choose a primary-secondary turns ratio of 1 : 1 for the 15-V output based on an approximate 60% duty cycle at minimum input voltage using Equation 33. The transformer turns ratio for both outputs is thus specified as 1 : 1 : 0.52.

$$N_{PS} = \frac{D_{MAX}}{1 - D_{MAX}} \cdot \frac{V_{IN(min)}}{V_{OUT} + V_D} = \frac{0.6}{1 - 0.6} \cdot \frac{9.5\,V}{15\,V + 0.4\,V} \approx 1 \tag{33}$$

Select a magnetizing inductance based on the minimum off-time constraint using Equation 34. Choose a value of 30 µH and a saturation current of 2 A for this application.

$$L_{MAG} \geq \frac{(V_{OUT} + V_D) \cdot N_{PS} \cdot t_{OFF\text{-}MIN}}{I_{SW\text{-}PEAK(FFM)}} = \frac{(15\,V + 0.35\,V) \cdot 1 \cdot 450\,ns}{0.3\,A} = 23\,\mu H \tag{34}$$

Find the maximum output current for a given turns ratio, assuming the outputs are symmetrically loaded, using Equation 35.

Copyright © 2018–2020, Texas Instruments Incorporated

$$I_{OUT(max)} \frac{\eta}{2} \cdot \frac{I_{SW\text{-}PEAK}}{\left(\frac{V_{OUT}}{V_{IN}} + \frac{1}{N_{PS}}\right)} = \frac{0.9}{2} \cdot \frac{1.5\,A}{\left(\frac{22.7\,V}{V_{IN}} + \frac{1}{(1/1.52)}\right)} = \begin{cases} 0.2A \text{ at } V_{IN} = 12\,V \\ 0.27\,A \text{ at } V_{IN} = 24\,V \end{cases} \tag{35}$$

9.2.2.2.2 Flyback Diodes – D_{FLY1} and D_{FLY2}

The flyback diode reverse voltages for the positive and negative outputs are given respectively by Equation 36 and Equation 25.

$$V_{D1\text{-}REV} \geq \frac{V_{IN(max)}}{N_{PS}} + V_{OUT1} = \frac{36\,V}{1} + 15\,V = 51V \tag{36}$$

$$V_{D2\text{-}REV} \geq \frac{V_{IN(max)}}{N_{PS}} + \left|V_{OUT2}\right| = 36\,V \cdot 0.52 + 7.7\,V = 26.4\,V \tag{37}$$

Choose 100-V, 1-A and 60-V, 1-A Schottky diodes for the positive and negative outputs, respectively, to allow some margin for inevitable voltage overshoot and ringing related to leakage inductance and diode capacitance. If needed, use a diode RC snubber circuit, for example 100 Ω and 22 pF, to mitigate such overshoot and ringing.

9.2.2.2.3 Input Capacitor – C_{IN}

The input capacitor, C_{IN}, filters the primary-side triangular current waveform. To prevent large ripple voltage, use a low-ESR ceramic input capacitor sized according to Equation 24 for the RMS ripple current given by Equation 25. In this design example, choose a 10-µF, 50-V ceramic input capacitor with X7R dielectric and 1210 footprint.

9.2.2.2.4 Feedback Resistor – R_{FB}

Install a 154-kΩ resistor from SW to FB based on an output voltage setpoint of 15 V (plus a flyback diode voltage drop) reflected to the primary by a transformer turns ratio of unity.

$$R_{FB} = \frac{(V_{OUT} + V_D) \cdot N_{PS}}{0.1\,mA} = \frac{(15\,V + 0.3\,V) \cdot 1}{0.1\,mA} = 154\,k\Omega \tag{38}$$

9.2.2.2.5 UVLO Resistors – R_{UV1}, R_{UV2}

Given $V_{IN(on)}$ and $V_{IN(off)}$ as the input voltage turn-on and turn-off thresholds of 9 V and 7 V, respectively, select the upper and lower UVLO resistors using Equation 39 and Equation 40.

$$R_{UV1} = \frac{V_{IN(on)} \cdot \frac{V_{UV\text{-}FALLING}}{V_{UV\text{-}RISING}} - V_{IN(off)}}{I_{UV\text{-}HYST}} = \frac{9\,V \cdot \frac{1.45\,V}{1.5\,V} - 7\,V}{5\,\mu A} = 340\,k\Omega \tag{39}$$

$$R_{UV2} = R_{UV1} \cdot \frac{V_{UV\text{-}RISING}}{V_{IN(on)} - V_{UV\text{-}RISING}} = 340\,k\Omega \cdot \frac{1.5\,V}{9\,V - 1.5\,V} = 68\,k\Omega \tag{40}$$

9.2.2.3 Application Curves

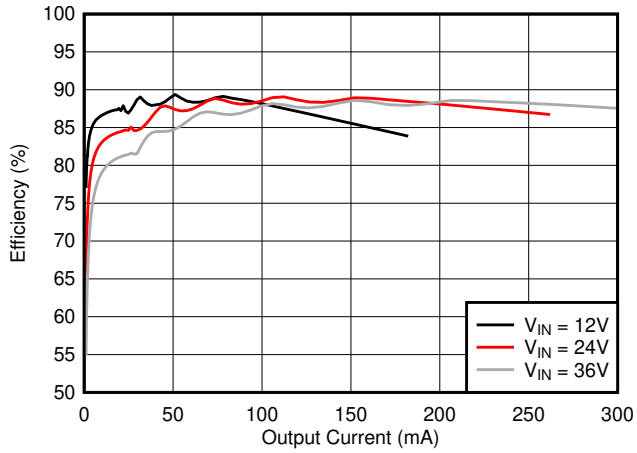

Figure 35. Efficiency (Linear Scale)

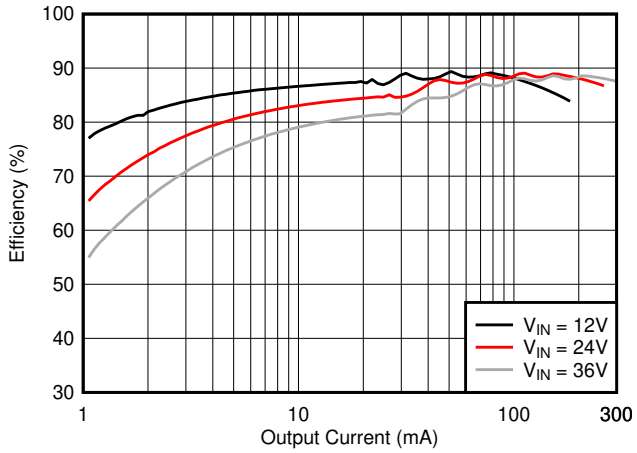

Figure 36. Efficiency (Log Scale)

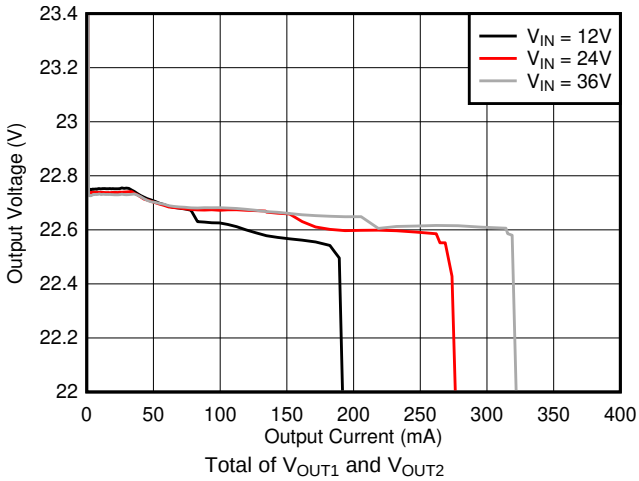

Figure 37. Load Regulation (Linear Scale)

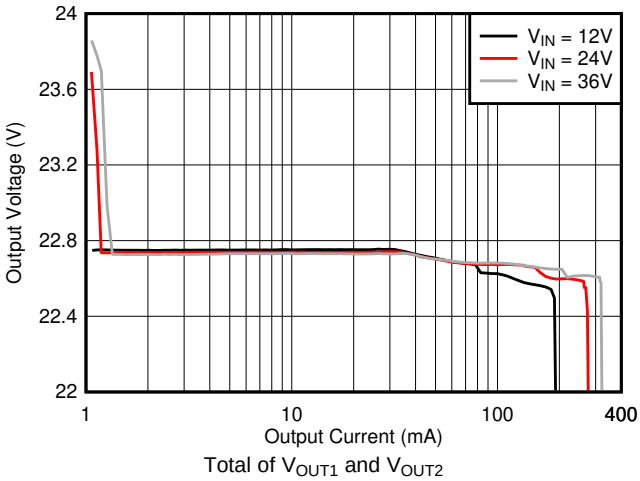

Figure 38. Load Regulation (Log Scale)

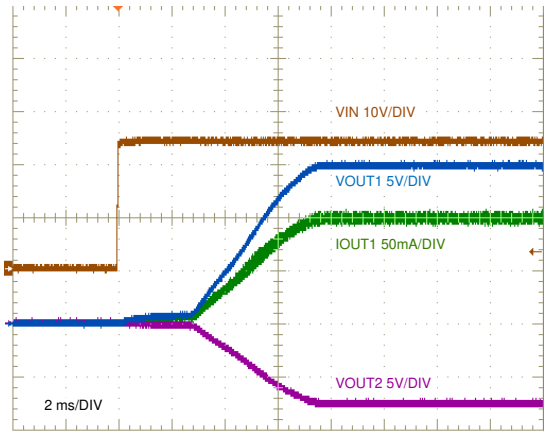

V_{IN} stepped to 24 V 75 Ω and 40 Ω Loads

Figure 39. Start-Up Characteristic

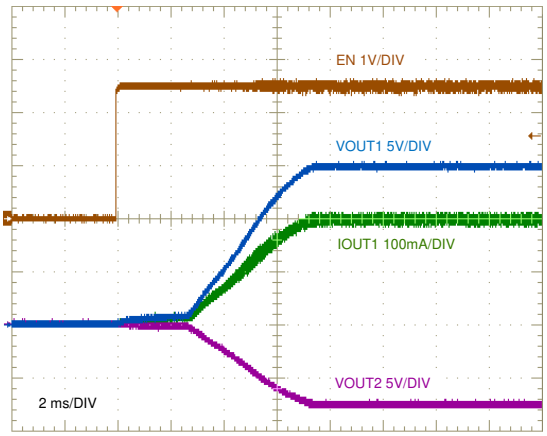

V_{IN} = 24 V 75 Ω and 40 Ω Loads

Figure 40. ENABLE ON Characteristic

Copyright © 2018–2020, Texas Instruments Incorporated

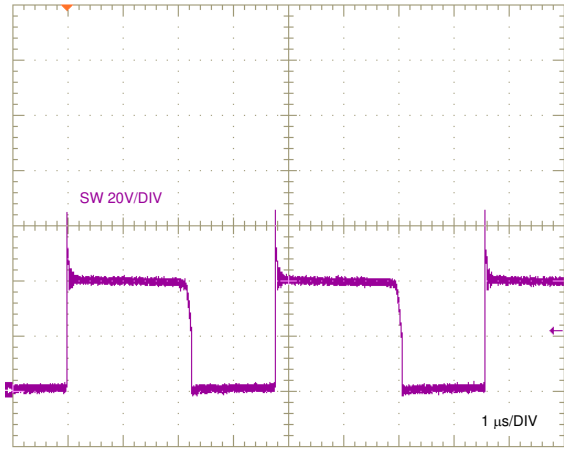

V_{IN} = 24 V

Figure 41. Switch Voltage, Full Load

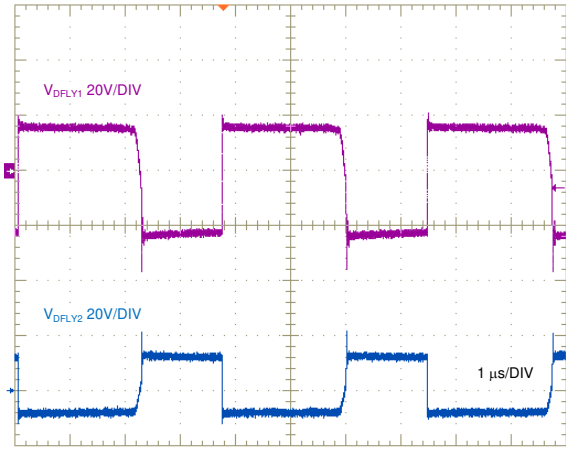

V_{IN} = 24 V

Figure 42. Flyback Diode Voltages, Full Load

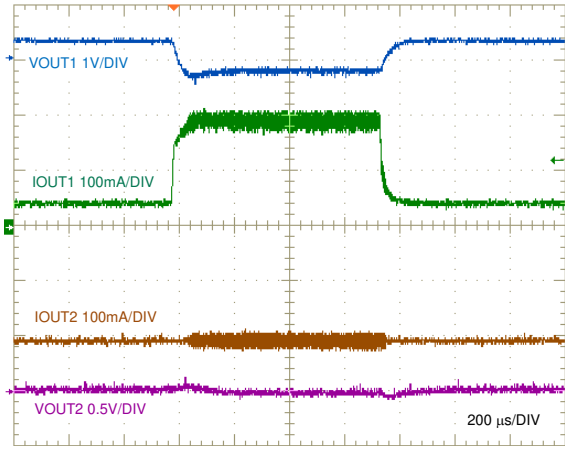

V_{IN} = 24 V I_{OUT1} = 200 mA

Figure 43. Output 1 Load Transient, 50 mA to 200 mA

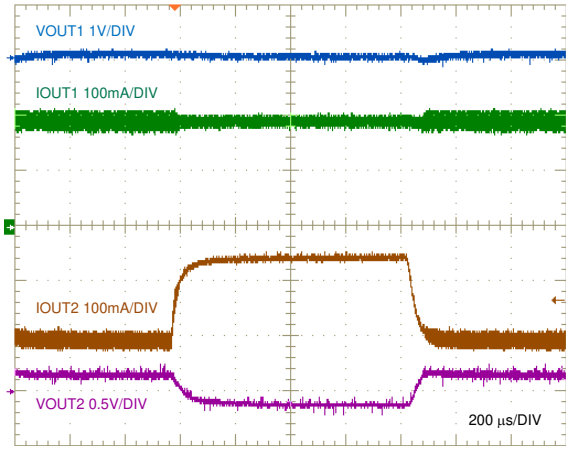

V_{IN} = 24 V I_{OUT2} = 200 mA

Figure 44. Output 2 Load Transient, 50 mA to 200 mA

9.2.3 Design 3: PSR Flyback Converter With Stacked Dual Outputs of 24 V and 5 V

The schematic diagram of a dual-output flyback converter with high-voltage secondary stacked on the low-voltage secondary winding is given in Figure 45. This configuration reduces the number of turns for the high-voltage output, resulting in lower secondary-to-secondary leakage inductance for improved output voltage cross regulation.

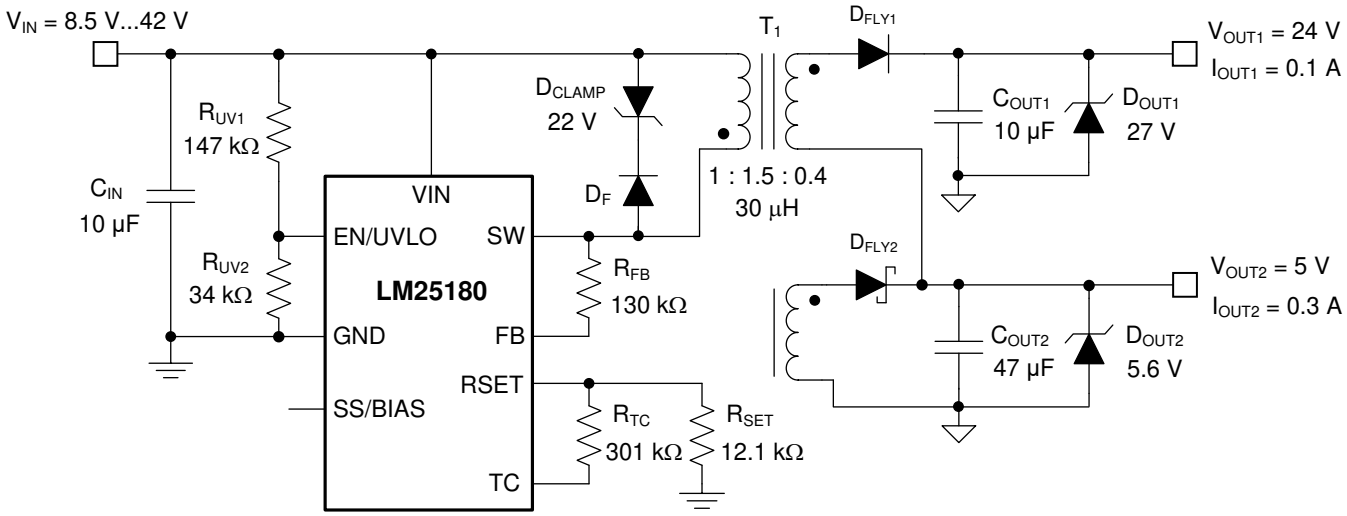

Figure 45. Schematic for Design 3 With $V_{IN(nom)}$ = 24 V, V_{OUT1} = 24 V, V_{OUT2} = 5 V

9.2.3.1 Design Requirements

The required input, output, and performance parameters for this application example are shown in Table 6.

Table 6. Design Parameters

DESIGN PARAMETER	VALUE
Input voltage range (steady state)	8.5 V to 42 V
Output 1 voltage and current	24 V, 0.1 A
Output 2 voltage and current	5 V, 0.3 A
Input UVLO thresholds	8 V on, 7 V off
Output voltage regulation	±2%

The target full-load efficiency of this LM25180 design is 88% based on a nominal input voltage of 24 V and isolated output voltages of 24 V and 5 V. The selected flyback converter components are cited in Table 7, including multi-winding flyback transformer, input and output capacitors, rectifying diodes, and converter IC.

Copyright © 2018–2020, Texas Instruments Incorporated

Table 7. List of Components for Design 3

REF DES	QTY	SPECIFICATION	VENDOR	PART NUMBER
C_{IN}, C_{OUT1}	2	10 µF, 50 V, X7R, 1210, ceramic	Taiyo Yuden	UMK325AB7106MM-T
		10 µF, 50 V, X7S, 1210, ceramic	TDK	C3225X7R1H106M
C_{OUT2}	1	47 µF, 10 V, X7R, 1210, ceramic	Murata	GRM32ER71A476ME15L
D_{FLY1}	1	Switching diode, fast recovery, 200 V, 1 A, SOD-123	DFLU1200	Diodes Inc.
D_{FLY2}	1	Schottky diode, 40 V, 1 A, SOD-123	B140HW	Diodes Inc.
D_{CLAMP}	1	Zener, 22 V, 1 W, PowerDI-123	DFLZ22-7	Diodes Inc.
D_F	1	Switching diode, 75 V, 0.25 A, SOD-323	CMDD4448	Central Semi
D_{OUT1}	1	Zener, 27 V, 2%, SOD-523	BZX585-B27	Nexperia
D_{OUT2}	1	Zener, 5.6 V, 2%, SOD-523	BZX585-B5V6	Nexperia
R_{FB}	1	130 kΩ, 1%, 0402	Std	Std
R_{SET}	1	12.1 kΩ, 1%, 0402	Std	Std
R_{TC}	1	301 kΩ, 1%, 0402	Std	Std
R_{UV1}	1	147 kΩ, 1%, 0603	Std	Std
R_{UV2}	1	34 kΩ, 1%, 0402	Std	Std
T_1	1	30 µH, 2 A, turns ratio 1 : 1.5 : 0.4, 9 × 10 mm, SMT	Coilcraft	YA8864-BLD
		30 µH, 2 A, turns ratio 1 : 1 : 0.55, 9 × 10 mm, SMT	Coilcraft	YA8916-BLD
			Würth Electronik	750317595
U_1	1	LM25180 PSR flyback converter, VSON-8	Texas Instruments	LM25180NGUR

9.2.3.2 Detailed Design Procedure

Components are selected based on the converter specifications using the LM25180 quick-start calculator. The design procedure is similar to that outlined for Designs 1 and 2 previously.

9.2.3.2.1 Flyback Transformer – T_1

The 24-V output is DC stacked on top of the 5-V output as they share a common return connection. This enables lower secondary-to-secondary leakage inductance for better cross regulation and also reduced rectifier diode reverse voltage stress. Choose a primary-secondary turns ratio for the effective 19-V secondary based on an approximate 60% max duty cycle at minimum input voltage using Equation 41.

$$N_{PS1} = \frac{N_P}{N_{S1}} = \frac{D_{MAX}}{1 - D_{MAX}} \cdot \frac{V_{IN(min)}}{V_{OUT} + V_D} = \frac{0.6}{1 - 0.6} \cdot \frac{8.5\,V}{19\,V + 0.6\,V} = 0.65 \tag{41}$$

Set the turns ratio of the transformer secondary windings using Equation 42. The transformer turns ratio for both outputs is thus specified as 1 : 1.5 : 0.4.

$$\frac{N_{S2}}{N_{S1}} = \frac{V_{OUT2} + V_{D2}}{V_{OUT1} + V_{D1}} = \frac{5\ V + 0.3\ V}{19\ V + 0.6\ V} = 0.27 \tag{42}$$

Select a magnetizing inductance based on the minimum off-time constraint using Equation 43. Choose a value of 30 µH and a saturation current of minimum 2 A for this application.

$$L_{MAG} \geq \frac{(V_{OUT1} + V_{D1}) \cdot N_{PS1} \cdot t_{OFF\text{-}MIN}}{I_{SW\text{-}PEAK(FFM)}} = \frac{(19\,V + 0.6\,V) \cdot (1/1.5) \cdot 450\,ns}{0.3\,A} = 19.4\,\mu H \tag{43}$$

9.2.3.2.2 Feedback Resistor – R_{FB}

Install a 130-kΩ resistor from SW to FB based on the secondary winding voltage (the sum of the 5-V output voltage and the Schottky diode forward voltage drop) reflected by the relevant transformer turns ratio, which in this design is 1 : 0.4 or 2.5 : 1.

$$R_{FB} = \frac{(V_{OUT} + V_D) \cdot N_{PS}}{0.1\,mA} = \frac{(5\,V + 0.25\,V) \cdot 2.5}{0.1\,mA} = 130\ k\Omega \tag{44}$$

9.2.3.2.3 UVLO Resistors – R_{UV1}, R_{UV2}

Given $V_{IN(on)}$ and $V_{IN(off)}$ as the input voltage turn-on and turn-off thresholds of 8 V and 7 V, respectively, select the upper and lower UVLO resistors using the following expressions:

$$R_{UV1} = \frac{V_{IN(on)} \cdot \frac{V_{UV\text{-}FALLING}}{V_{UV\text{-}RISING}} - V_{IN(off)}}{I_{UV\text{-}HYST}} = \frac{8\ \text{V} \cdot \frac{1.45\ \text{V}}{1.5\ \text{V}} - 7\ \text{V}}{5\ \mu\text{A}} = 147\,\text{k}\Omega \tag{45}$$

$$R_{UV2} = R_{UV1} \cdot \frac{V_{UV\text{-}RISING}}{V_{IN(on)} - V_{UV\text{-}RISING}} = 147\ \text{k}\Omega \cdot \frac{1.5\ \text{V}}{8\ \text{V} - 1.5\ \text{V}} = 34\ \text{k}\Omega \tag{46}$$

Calculate the actual input voltage turn-on and turn-off thresholds as follows:

$$V_{IN(on)} = V_{UV\text{-}RISING}\left(1 + \frac{R_{UV1}}{R_{UV2}}\right) = 1.5\,\text{V}\left(1 + \frac{147\ \text{k}\Omega}{34\,\text{k}\Omega}\right) = 7.985\,\text{V} \tag{47}$$

$$V_{IN(off)} = V_{UV\text{-}FALLING}\left(1 + \frac{R_{UV1}}{R_{UV2}}\right) - I_{UV\text{-}HYST} \cdot R_{UV1} = 1.45\,\text{V}\left(1 + \frac{147\,\text{k}\Omega}{34\,\text{k}\Omega}\right) - 5\,\mu\text{A} \cdot 147\,\text{k}\Omega = 6.984\,\text{V} \tag{48}$$

9.2.3.3 Application Curves

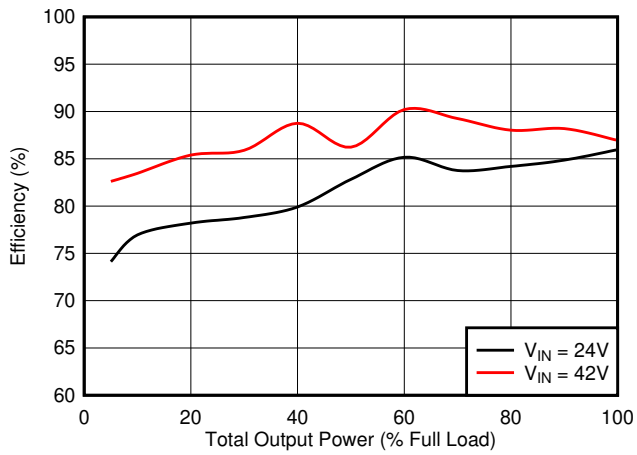

Figure 46. Efficiency

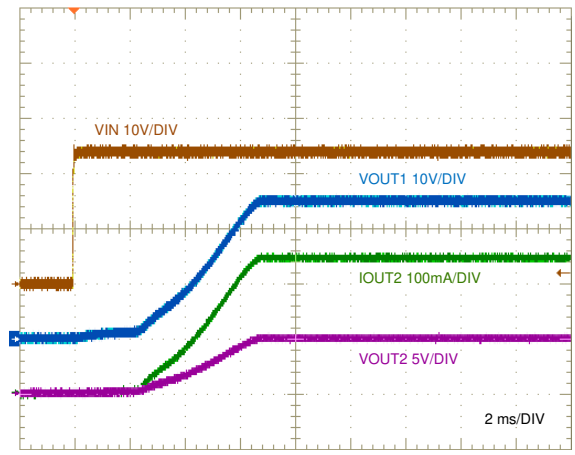

V_{IN} ramped to 24 V — 240-Ω and 20-Ω Loads

Figure 47. Start-Up Characteristic

Copyright © 2018–2020, Texas Instruments Incorporated

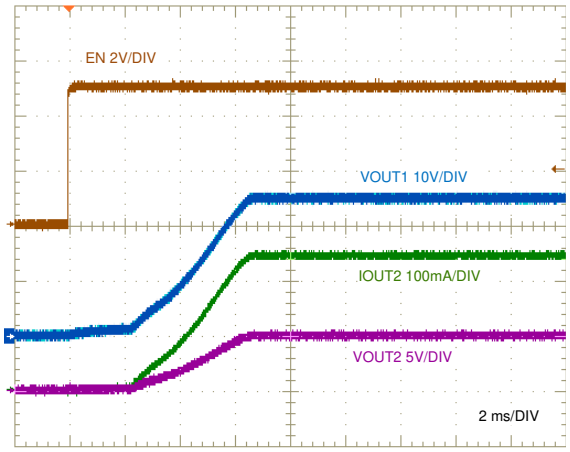

V_{IN} = 24 V 240-Ω and 20-Ω Loads

Figure 48. ENABLE ON Characteristic

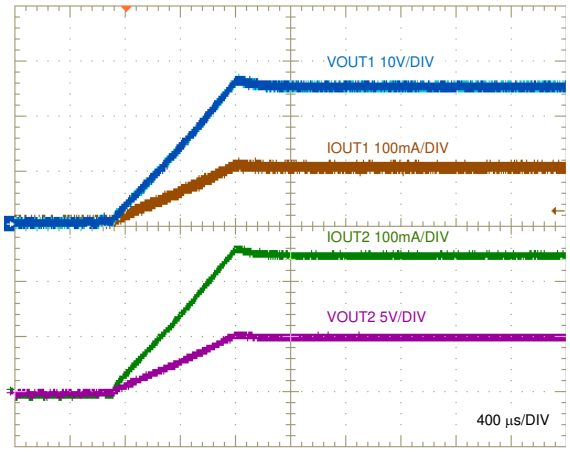

V_{IN} = 24 V 240-Ω and 20-Ω Loads

Figure 49. Recovery From Short Circuit

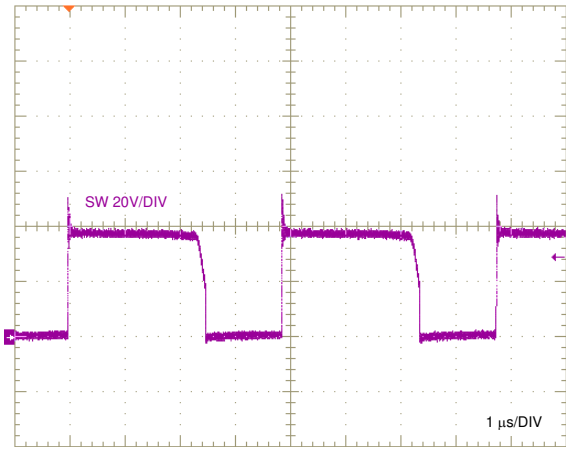

V_{IN} = 24 V

Figure 50. Switch Voltage, Full Load

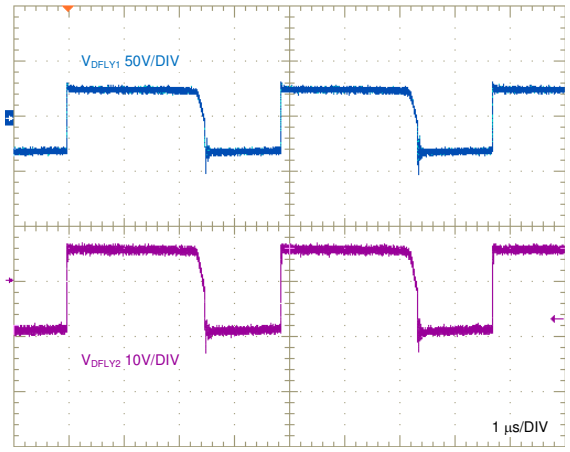

V_{IN} = 24 V

Figure 51. Flyback Diode Voltages, Full Load

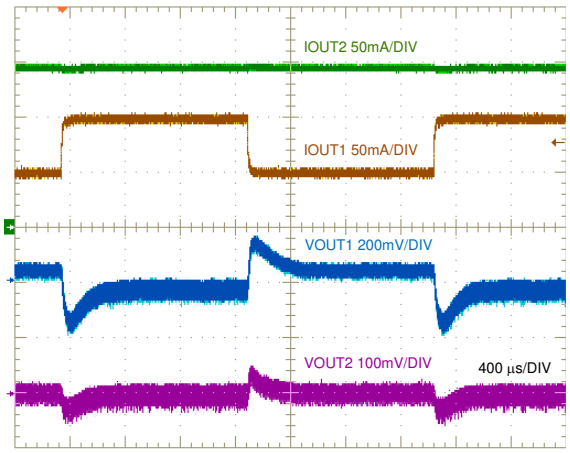

V_{IN} = 24 V I_{OUT2} = 150 mA

Figure 52. Output 1 Load Transient, 50 mA to 100 mA

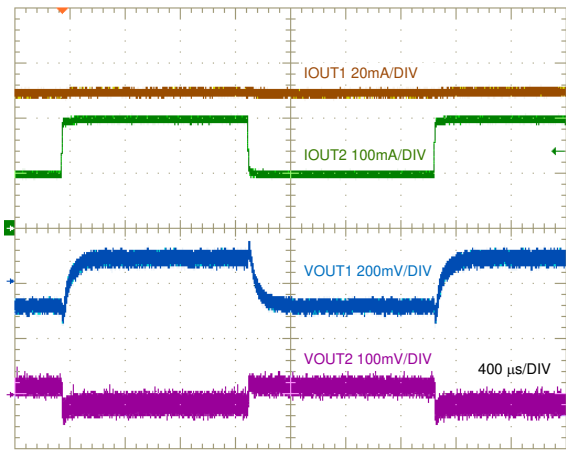

V_{IN} = 24 V I_{OUT1} = 50 mA

Figure 53. Output 2 Load Transient, 100 mA to 200 mA

10 Power Supply Recommendations

The LM25180 PSR flyback converter operates over a wide input voltage range from 4.5 V to 42 V. The characteristics of the input supply must be compatible with the Specifications. In addition, the input supply must be capable of delivering the required input current to the fully-loaded regulator. Estimate the average input current with Equation 49.

$$I_{IN} = \frac{V_{OUT} \cdot I_{OUT}}{V_{IN} \cdot \eta}$$

where

- η is the efficiency (49)

If the converter is connected to an input supply through long wires or PCB traces with a large impedance, special care is required to achieve stable performance. The parasitic inductance and resistance of the input cables may have an adverse affect on converter operation. The parasitic inductance in combination with the low-ESR ceramic input capacitors form an underdamped resonant circuit. This circuit can cause overvoltage transients at VIN each time the input supply is cycled ON and OFF. The parasitic resistance causes the input voltage to dip during a load transient. If the regulator is operating close to the minimum input voltage, this dip can cause false UVLO fault triggering and a system reset. The best way to solve such issues is to reduce the distance from the input supply to the regulator and use an aluminum electrolytic input capacitor in parallel with the ceramics. The moderate ESR of the electrolytic capacitors helps to damp the input resonant circuit and reduce any voltage overshoots. A capacitance in the range of 10 µF to 47 µF is usually sufficient to provide input damping and helps to hold the input voltage steady during large load transients. A typical ESR of 0.25 Ω provides enough damping for most input circuit configurations.

An EMI input filter is often used in front of the regulator that, unless carefully designed, can lead to instability as well as some of the effects mentioned above. The application report *Simple Success with Conducted EMI for DC-DC Converters* provides helpful suggestions when designing an input filter for any switching regulator.

Copyright © 2018–2020, Texas Instruments Incorporated

11 Layout

The performance of any switching converter depends as much upon PCB layout as it does the component selection. The following guidelines are provided to assist with designing a PCB with the best power conversion performance, thermal performance, and minimized generation of unwanted EMI. Figure 54 and Figure 55 provide layout examples for single-output and dual-output designs, respectively.

11.1 Layout Guidelines

PCB layout is a critical for good power supply design. There are several paths that conduct high slew-rate currents or voltages that can interact with transformer leakage inductance or parasitic capacitance to generate noise and EMI or degrade the performance of the power supply.

1. Bypass the VIN pin to GND with a low-ESR ceramic capacitor, preferably of X7R or X7S dielectric. Place C_{IN} as close as possible to the LM25180 VIN and GND pins. Ground return paths for the input capacitor or capacitors must consist of localized top-side planes that connect to the GND pin and exposed PAD.
2. Minimize the loop area formed by the input capacitor connections and the VIN and GND pins.
3. Locate the transformer close to the SW pin. Minimize the area of the SW trace or plane to prevent excessive e-field or capacitive coupling.
4. Minimize the loop area formed by the diode-Zener clamp circuit connections and the primary winding terminals of the transformer.
5. Minimize the loop area formed by the flyback rectifying diode, output capacitor and the secondary winding terminals of the transformer.
6. Connect adequate copper at the cathode of the flyback diode to prevent overheating during overload or high ambient temperature conditions.
7. Tie the GND pin directly to the power pad under the device and to a heat-sinking PCB ground plane.
8. Use a ground plane in one of the middle layers as a noise shielding and heat dissipation path.
9. Have a single-point ground connection to the plane. Route the return connections for the reference resistor, soft-start, and enable components directly to the GND pin. This prevents any switched or load currents from flowing in analog ground traces. If not properly handled, poor grounding results in degraded load regulation or erratic output voltage ripple behavior.
10. Make V_{IN+}, V_{OUT+} and ground bus connections short and wide. This reduces any voltage drops on the input or output paths of the converter and maximizes efficiency.
11. Minimize trace length to the FB pin. Locate the feedback resistor close to the FB pin.
12. Locate components R_{SET}, R_{TC} and C_{SS} as close as possible to their respective pins. Route with minimal trace lengths.
13. Place a capacitor between input and output return connections to route common-mode noise currents directly back to their source.
14. Provide adequate heatsinking for the LM25180 to keep the junction temperature below 150°C. For operation at full rated load, the top-side ground plane is an important heat-dissipating area. Use an array of heat-sinking vias to connect the exposed PAD to the PCB ground plane. If the PCB has multiple copper layers, connect these thermal vias to inner-layer ground planes. The connection to V_{OUT+} provides heatsinking for the flyback diode.

11.2 Layout Examples

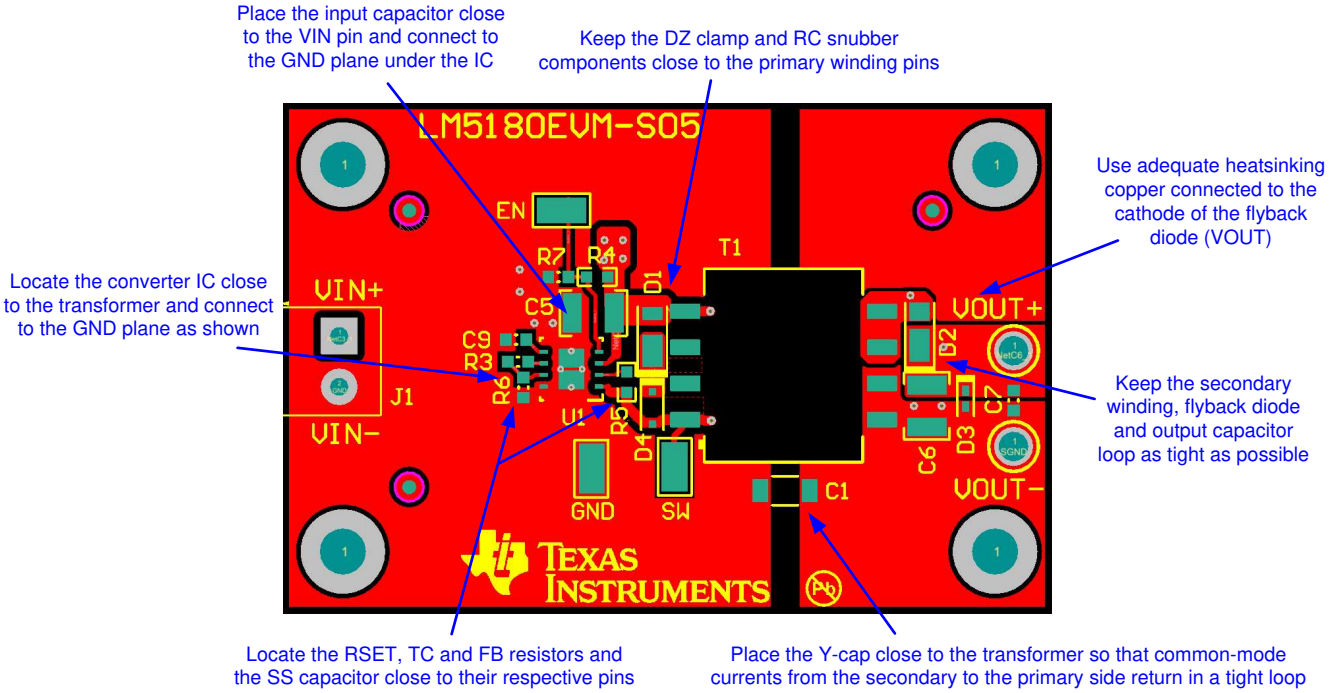

Figure 54. Single-Output PCB Layout

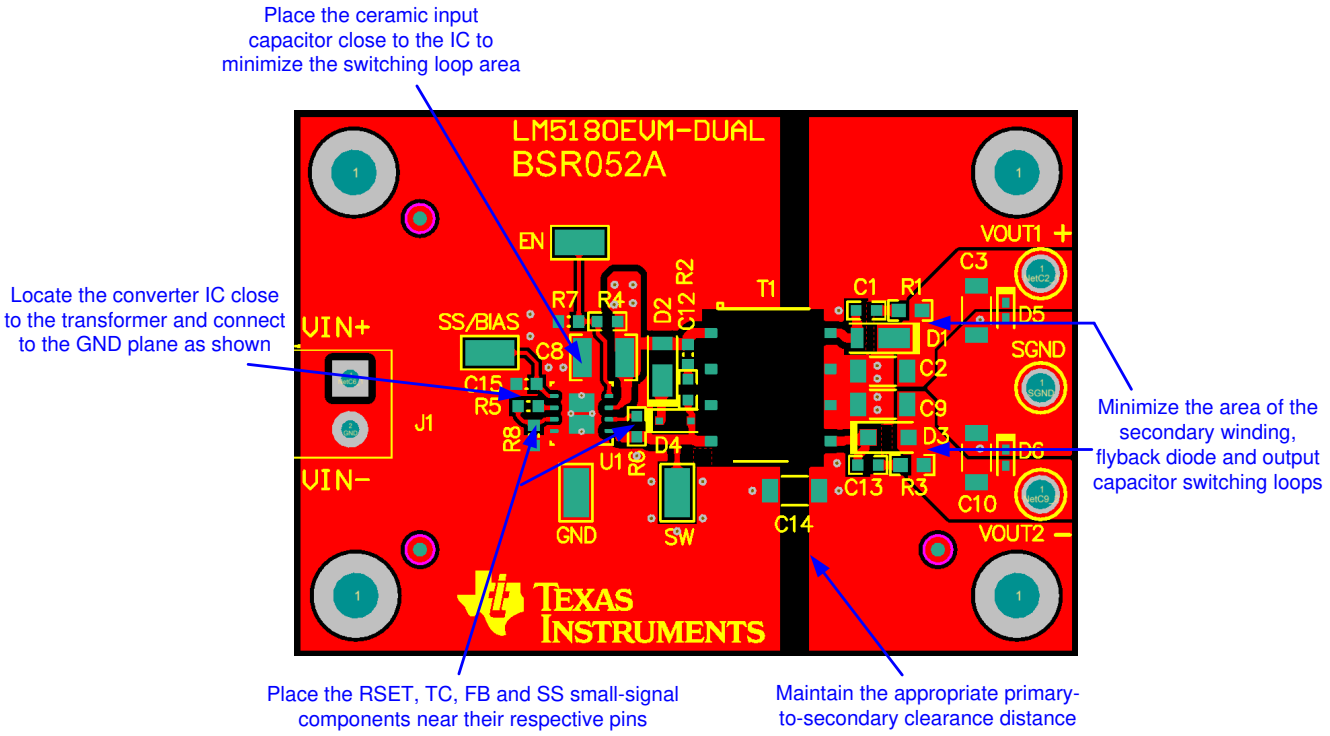

Figure 55. Dual-Output PCB Layout

Copyright © 2018–2020, Texas Instruments Incorporated

12 Device and Documentation Support

12.1 Device Support

12.1.1 Third-Party Products Disclaimer

TI'S PUBLICATION OF INFORMATION REGARDING THIRD-PARTY PRODUCTS OR SERVICES DOES NOT CONSTITUTE AN ENDORSEMENT REGARDING THE SUITABILITY OF SUCH PRODUCTS OR SERVICES OR A WARRANTY, REPRESENTATION OR ENDORSEMENT OF SUCH PRODUCTS OR SERVICES, EITHER ALONE OR IN COMBINATION WITH ANY TI PRODUCT OR SERVICE.

12.1.2 Development Support

With input voltage range and current capability as specified in Table 8, the PSR flyback DC/DC converter family of parts from TI provides flexibility, scalability and optimized solution size for a range of applications. Using an 8-pin WSON package with 4-mm × 4-mm footprint and 0.8-mm pin pitch, these converters enable isolated DC/DC solutions with high density and low component count.

Table 8. PSR Flyback DC/DC Converter Family

PSR FLYBACK DC/DC CONVERTER	INPUT VOLTAGE RANGE	PEAK SWITCH CURRENT	MAXIMUM LOAD CURRENT, V_{OUT} = 12 V, N_{PS} = 1		
			V_{IN} = 4.5 V	V_{IN} = 13.5 V	V_{IN} = 24 V
LM5181	4.5 V to 65 V	0.75 A	90 mA	180 mA	225 mA
LM5180	4.5 V to 65 V	1.5 A	180 mA	360 mA	450 mA
LM25180	4.5 V to 42 V	1.5 A	180 mA	360 mA	450 mA
LM25183	4.5 V to 42 V	2.5 A	300 mA	600 mA	750 mA
LM25184	4.5 V to 42 V	4.1 A	500 mA	1 A	1.25 A

For development support, see the following:

- LM25180 *Quick-start Calculator*
- LM25180 *Simulation Models*
- For TI's reference design library, visit TIDesigns
- For TI's WEBENCH Design Environment, visit the WEBENCH® Design Center
- To view a related device of this product, see the LM5180 product page
- TI Designs:
  - *Isolated IGBT Gate-Drive Power Supply Reference Design With Integrated Switch PSR Flyback Controller*
  - *Compact, Efficient, 24-V Input Auxiliary Power Supply Reference Design for Servo Drives*
  - *Reference Design for Power-Isolated Ultra-Compact Analog Output Module*
  - *HEV/EV Traction Inverter Power Stage with 3 Types of IGBT/SiC Bias-Supply Solutions Reference Design*
  - *4.5-V to 65-V Input, Compact Bias Supply With Power Stage Reference Design for IGBT/SiC Gate Drivers*
  - *Channel-to-Channel Isolated Analog Input Module Reference Design*
  - *SiC/IGBT Isolated Gate Driver Reference Design With Thermal Diode and Sensing FET*
  - *>95% Efficiency, 1-kW Analog Control AC/DC Reference Design for 5G Telecom Rectifier*
  - *3.5-W Automotive Dual-output PSR Flyback Regulator Reference Design*
- TI Technical Articles:
  - *Flyback Converters: Two Outputs are Better Than One*
  - *Common Challenges When Choosing the Auxiliary Power Supply for Your Server PSU*
  - *Maximizing PoE PD Efficiency on a Budget*

12.1.3 Custom Design With WEBENCH® Tools

Click here to create a custom design using the LM25180 device with WEBENCH® Power Designer.

1. Start by entering the input voltage (V_{IN}), output voltage (V_{OUT}), and output current (I_{OUT}) requirements.
2. Optimize the design for key parameters such as efficiency, footprint, and cost using the optimizer dial.
3. Compare the generated design with other possible solutions from Texas Instruments.

The WEBENCH Power Designer provides a customized schematic along with a list of materials with real-time pricing and component availability.

In most cases, these actions are available:

- Run electrical simulations to see important waveforms and circuit performance
- Run thermal simulations to understand board thermal performance
- Export customized schematic and layout into popular CAD formats
- Print PDF reports for the design, and share the design with colleagues

Get more information about WEBENCH tools at www.ti.com/WEBENCH.

12.2 Documentation Support

12.2.1 Related Documentation

For related documentation see the following:

- *LM5180EVM-S05 EVM User's Guide* (SNVU592)
- *LM5180EVM-DUAL EVM User's Guide* (SNVU609)
- *LM25184EVM-S12 EVM User's Guide* (SNVU680)
- *How an Auxless PSR-Flyback Converter can Increase PLC Reliability and Density* (SLYT779)
- *Why Use PSR-Flyback Isolated Converters in Dual-Battery mHEV Systems* (SLYT791)
- *IC Package Features Lead to Higher Reliability in Demanding Automotive and Communications Equipment Systems* (SNVA804)
- *PSR Flyback DC/DC Converter Transformer Design for mHEV Applications* (SNVA805)
- *Flyback Transformer Design Considerations for Efficiency and EMI* (SLUP338)
- *Under the Hood of Flyback SMPS Designs* (SLUP261)
- White Papers:
  - *Valuing Wide V_{IN}, Low EMI Synchronous Buck Circuits for Cost-driven, Demanding Applications* (SLYY104)
  - *An Overview of Conducted EMI Specifications for Power Supplies* (SLYY136)
  - *An Overview of Radiated EMI Specifications for Power Supplies* (SLYY142)
- *AN-2162: Simple Success with Conducted EMI from DC-DC Converters* (SNVA489)
- *Using New Thermal Metrics* (SBVA025)
- *Semiconductor and IC Package Thermal Metrics* (SPRA953)

12.3 Receiving Notification of Documentation Updates

To receive notification of documentation updates, go to the device product folder on ti.com. In the upper right corner, click on *Alert me* to register for a weekly digest of any product information that has changed. For change details, review the revision history included in any revised document.

12.4 Support Resources

TI E2E™ support forums are an engineer's go-to source for fast, verified answers and design help — straight from the experts. Search existing answers or ask your own question to get the quick design help you need.

Linked content is provided "AS IS" by the respective contributors. They do not constitute TI specifications and do not necessarily reflect TI's views; see TI's Terms of Use.

12.5 Trademarks

E2E is a trademark of Texas Instruments.

Copyright © 2018–2020, Texas Instruments Incorporated

12.5 Trademarks (continued)

WEBENCH is a registered trademark of Texas Instruments.
All other trademarks are the property of their respective owners.

12.6 Electrostatic Discharge Caution

This integrated circuit can be damaged by ESD. Texas Instruments recommends that all integrated circuits be handled with appropriate precautions. Failure to observe proper handling and installation procedures can cause damage.

ESD damage can range from subtle performance degradation to complete device failure. Precision integrated circuits may be more susceptible to damage because very small parametric changes could cause the device not to meet its published specifications.

12.7 Glossary

SLYZ022 — *TI Glossary*.

This glossary lists and explains terms, acronyms, and definitions.

13 Mechanical, Packaging, and Orderable Information

The following pages have mechanical, packaging, and orderable information. This information is the most current data available for the designated devices. This data is subject to change without notice and revision of this document. For browser-based versions of this data sheet, refer to the left-hand navigation.

PACKAGE OUTLINE

NGU0008C

WSON - 0.8 mm max height

PLASTIC SMALL OUTLINE - NO LEAD

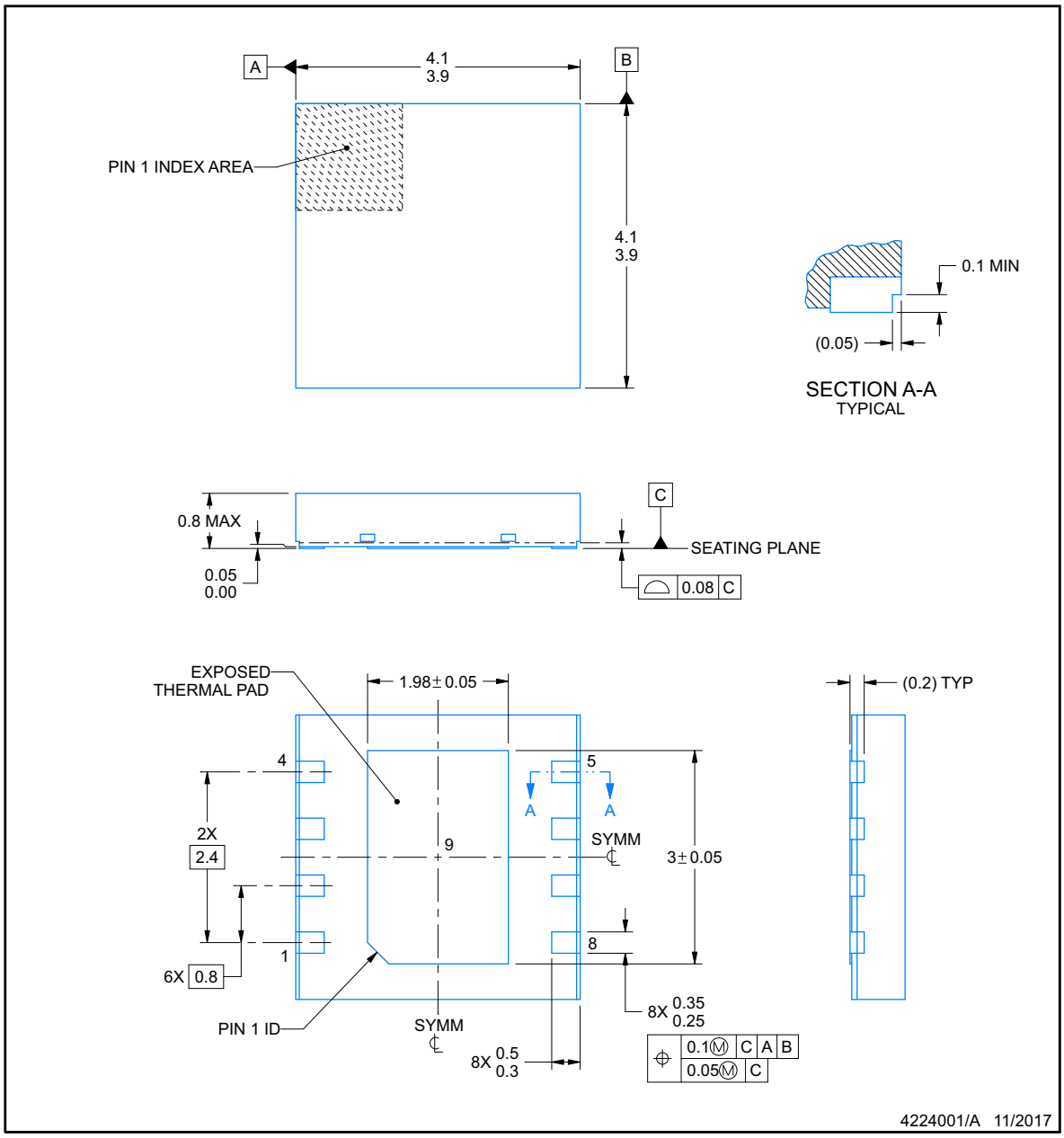

NOTES:

1. All linear dimensions are in millimeters. Any dimensions in parenthesis are for reference only. Dimensioning and tolerancing per ASME Y14.5M.
2. This drawing is subject to change without notice.
3. The package thermal pad must be soldered to the printed circuit board for thermal and mechanical performance.

Copyright © 2018–2020, Texas Instruments Incorporated

EXAMPLE BOARD LAYOUT

NGU0008C

WSON - 0.8 mm max height

PLASTIC SMALL OUTLINE - NO LEAD

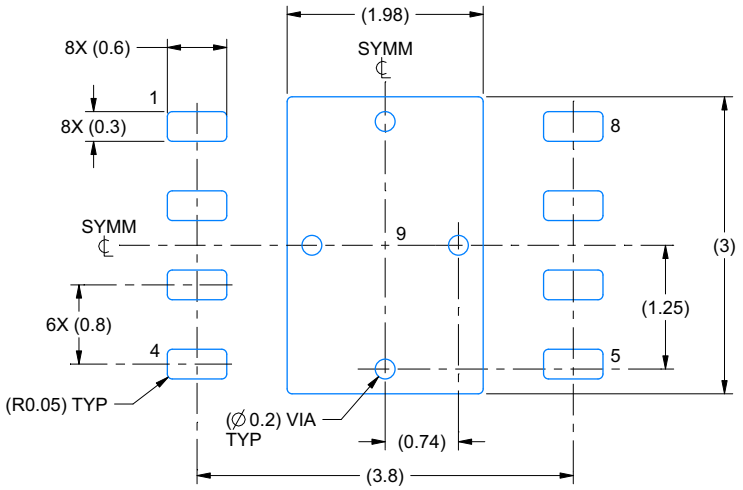

LAND PATTERN EXAMPLE
EXPOSED METAL SHOWN
SCALE:15X

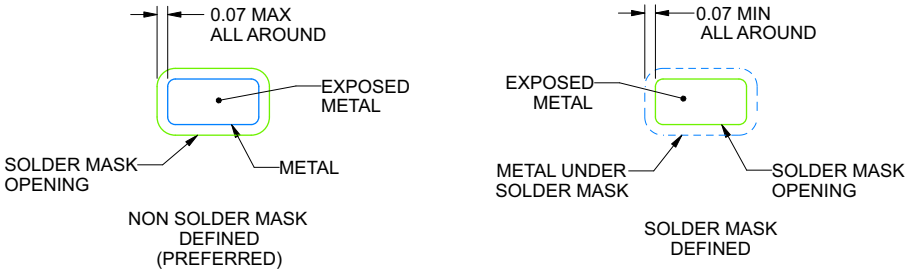

SOLDER MASK DETAILS

4224001/A 11/2017

NOTES: (continued)

4. This package is designed to be soldered to a thermal pad on the board. For more information, see Texas Instruments literature number SLUA271 (www.ti.com/lit/slua271).
5. Vias are optional depending on application, refer to device data sheet. If any vias are implemented, refer to their locations shown on this view. It is recommended that vias under paste be filled, plugged or tented.

Copyright © 2018–2020, Texas Instruments Incorporated

EXAMPLE STENCIL DESIGN

NGU0008C

WSON - 0.8 mm max height

PLASTIC SMALL OUTLINE - NO LEAD

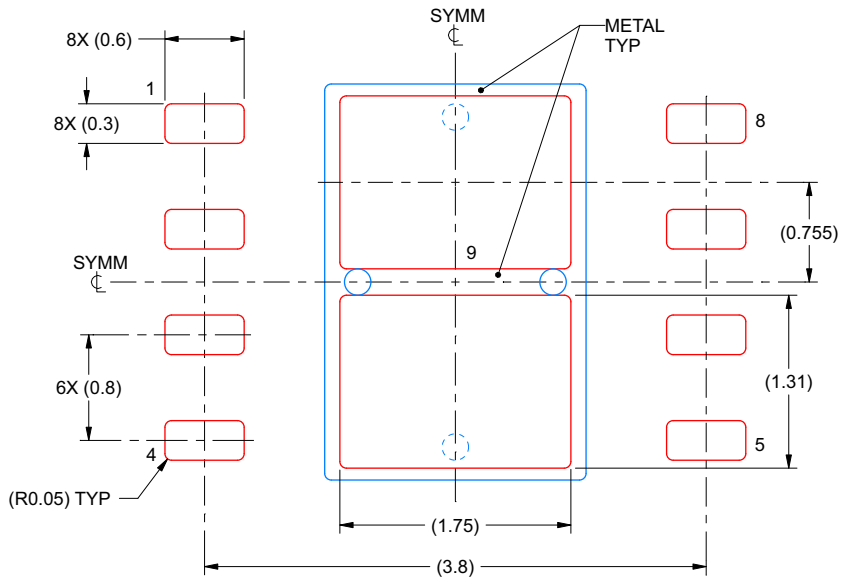

SOLDER PASTE EXAMPLE
BASED ON 0.125 mm THICK STENCIL

EXPOSED PAD 9:
77% PRINTED SOLDER COVERAGE BY AREA UNDER PACKAGE
SCALE:20X

4224001/A 11/2017

NOTES: (continued)

6. Laser cutting apertures with trapezoidal walls and rounded corners may offer better paste release. IPC-7525 may have alternate design recommendations.

Copyright © 2018–2020, Texas Instruments Incorporated

PACKAGING INFORMATION

Orderable part number	Status (1)	Material type (2)	Package | Pins	Package qty | Carrier	RoHS (3)	Lead finish/ Ball material (4)	MSL rating/ Peak reflow (5)	Op temp (°C)	Part marking (6)
LM25180NGUR	Active	Production	WSON (NGU) | 8	4500 | LARGE T&R	Yes	NIPDAU | SN	Level-2-260C-1 YEAR	-40 to 150	LM25180 NGU
LM25180NGUR.A	Active	Production	WSON (NGU) | 8	4500 | LARGE T&R	Yes	NIPDAU	Level-2-260C-1 YEAR	-40 to 150	LM25180 NGU

(1) **Status:** For more details on status, see our product life cycle.

(2) **Material type:** When designated, preproduction parts are prototypes/experimental devices, and are not yet approved or released for full production. Testing and final process, including without limitation quality assurance, reliability performance testing, and/or process qualification, may not yet be complete, and this item is subject to further changes or possible discontinuation. If available for ordering, purchases will be subject to an additional waiver at checkout, and are intended for early internal evaluation purposes only. These items are sold without warranties of any kind.

(3) **RoHS values:** Yes, No, RoHS Exempt. See the TI RoHS Statement for additional information and value definition.

(4) **Lead finish/Ball material:** Parts may have multiple material finish options. Finish options are separated by a vertical ruled line. Lead finish/Ball material values may wrap to two lines if the finish value exceeds the maximum column width.

(5) **MSL rating/Peak reflow:** The moisture sensitivity level ratings and peak solder (reflow) temperatures. In the event that a part has multiple moisture sensitivity ratings, only the lowest level per JEDEC standards is shown. Refer to the shipping label for the actual reflow temperature that will be used to mount the part to the printed circuit board.

(6) **Part marking:** There may be an additional marking, which relates to the logo, the lot trace code information, or the environmental category of the part.

Multiple part markings will be inside parentheses. Only one part marking contained in parentheses and separated by a "~" will appear on a part. If a line is indented then it is a continuation of the previous line and the two combined represent the entire part marking for that device.

Important Information and Disclaimer: The information provided on this page represents TI's knowledge and belief as of the date that it is provided. TI bases its knowledge and belief on information provided by third parties, and makes no representation or warranty as to the accuracy of such information. Efforts are underway to better integrate information from third parties. TI has taken and continues to take reasonable steps to provide representative and accurate information but may not have conducted destructive testing or chemical analysis on incoming materials and chemicals. TI and TI suppliers consider certain information to be proprietary, and thus CAS numbers and other limited information may not be available for release.

In no event shall TI's liability arising out of such information exceed the total purchase price of the TI part(s) at issue in this document sold by TI to Customer on an annual basis.

OTHER QUALIFIED VERSIONS OF LM25180 :

- Automotive : LM25180-Q1

NOTE: Qualified Version Definitions:

- Automotive - Q100 devices qualified for high-reliability automotive applications targeting zero defects

TAPE AND REEL INFORMATION

REEL DIMENSIONS

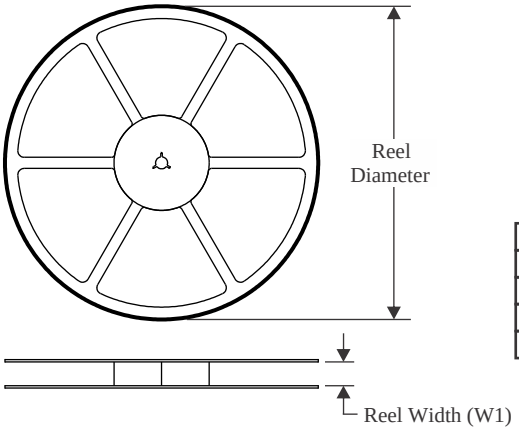

TAPE DIMENSIONS

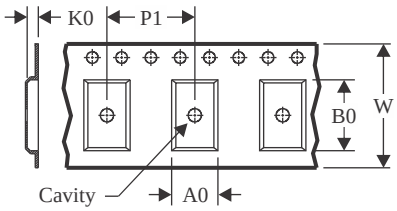

A0	Dimension designed to accommodate the component width
B0	Dimension designed to accommodate the component length
K0	Dimension designed to accommodate the component thickness
W	Overall width of the carrier tape
P1	Pitch between successive cavity centers

QUADRANT ASSIGNMENTS FOR PIN 1 ORIENTATION IN TAPE

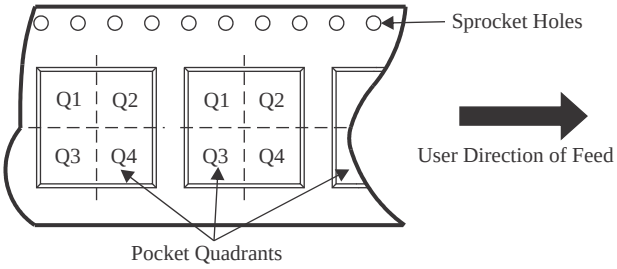

*All dimensions are nominal

Device	Package Type	Package Drawing	Pins	SPQ	Reel Diameter (mm)	Reel Width W1 (mm)	A0 (mm)	B0 (mm)	K0 (mm)	P1 (mm)	W (mm)	Pin1 Quadrant
LM25180NGUR	WSON	NGU	8	4500	330.0	12.4	4.25	4.25	1.15	8.0	12.0	Q1

TAPE AND REEL BOX DIMENSIONS

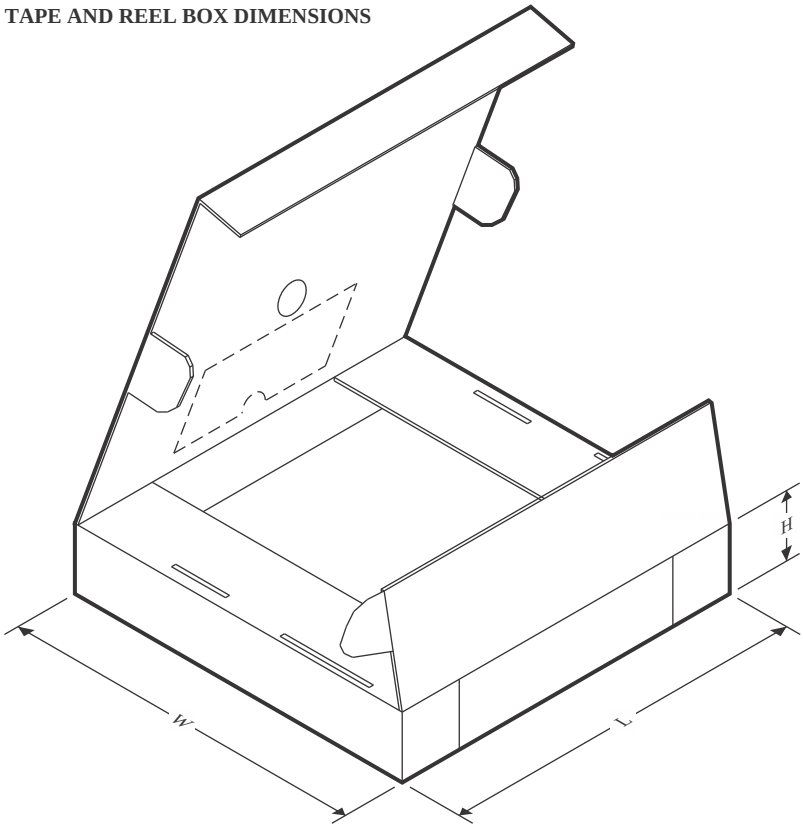

*All dimensions are nominal

Device	Package Type	Package Drawing	Pins	SPQ	Length (mm)	Width (mm)	Height (mm)
LM25180NGUR	WSON	NGU	8	4500	360.0	360.0	36.0

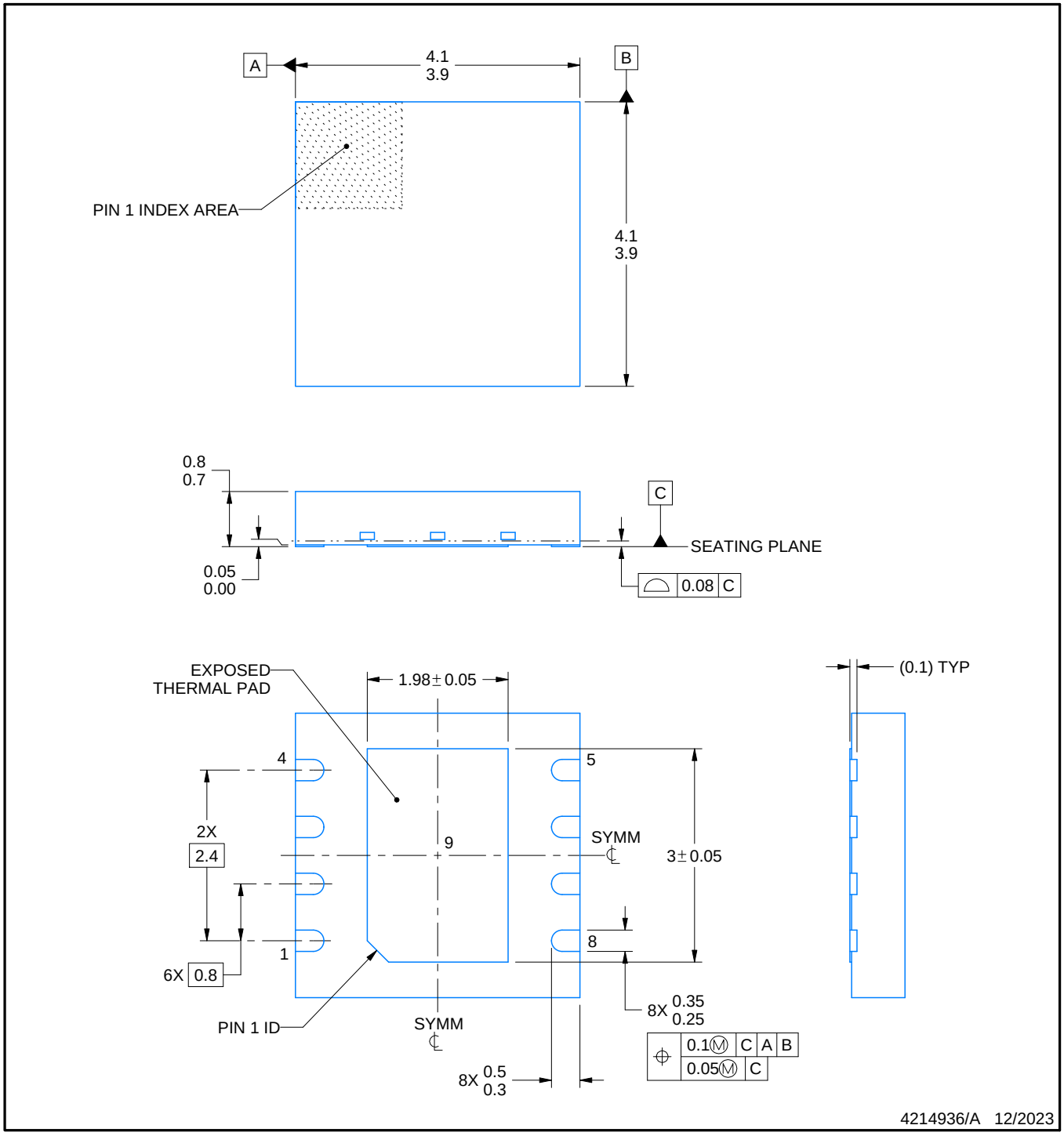

NOTES:

1. All linear dimensions are in millimeters. Any dimensions in parenthesis are for reference only. Dimensioning and tolerancing per ASME Y14.5M.
2. This drawing is subject to change without notice.
3. The package thermal pad must be soldered to the printed circuit board for thermal and mechanical performance.

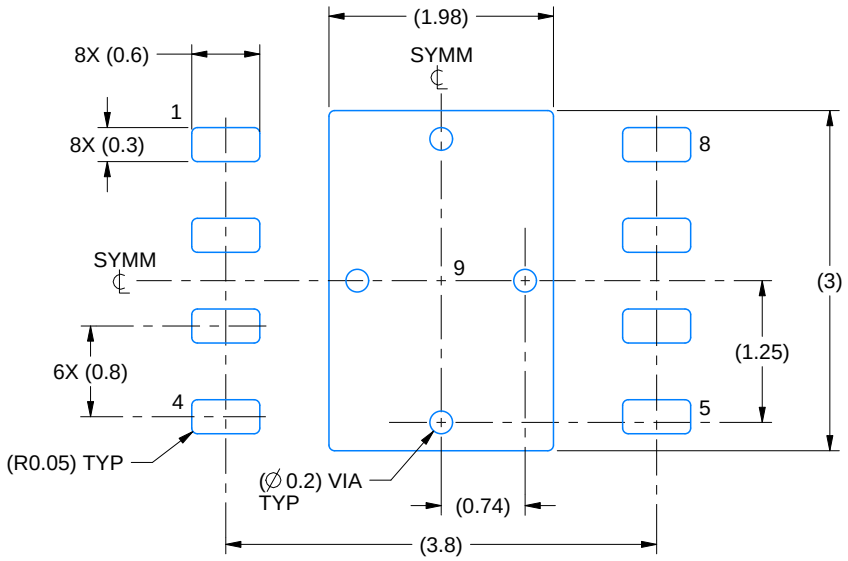

LAND PATTERN EXAMPLE
EXPOSED METAL SHOWN
SCALE:15X

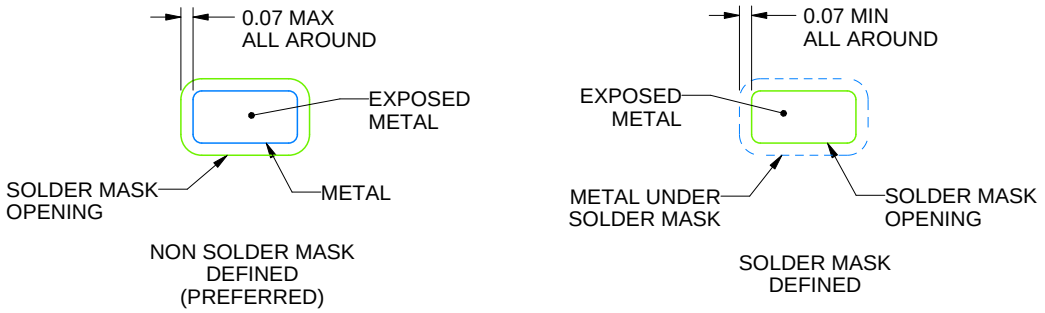

SOLDER MASK DETAILS

4214936/A 12/2023

NOTES: (continued)

4. This package is designed to be soldered to a thermal pad on the board. For more information, see Texas Instruments literature number SLUA271 (www.ti.com/lit/slua271).
5. Vias are optional depending on application, refer to device data sheet. If any vias are implemented, refer to their locations shown on this view. It is recommended that vias under paste be filled, plugged or tented.

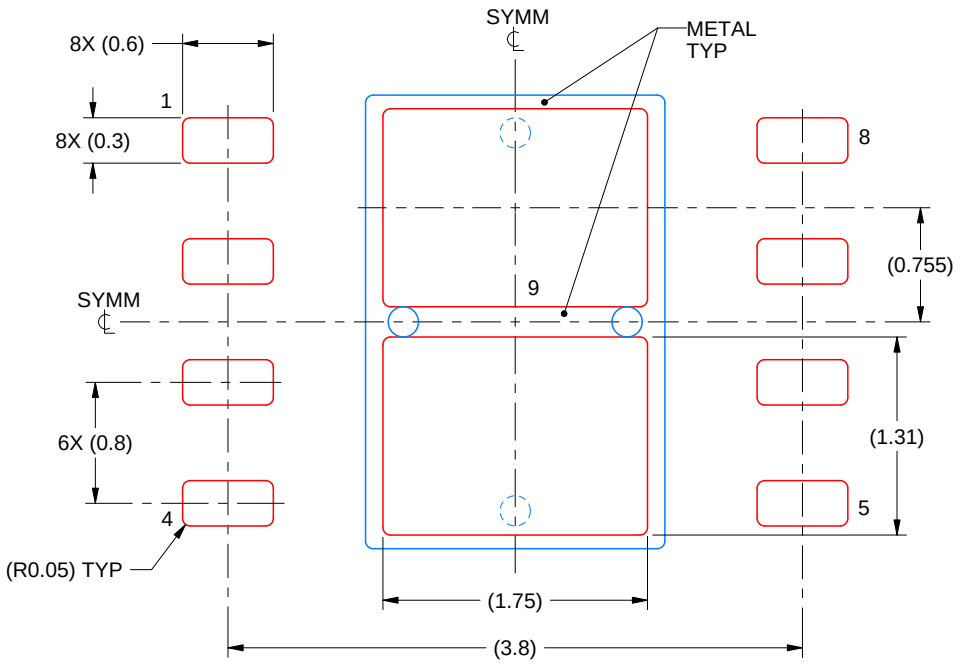

SOLDER PASTE EXAMPLE
BASED ON 0.125 mm THICK STENCIL

EXPOSED PAD 9:
77% PRINTED SOLDER COVERAGE BY AREA UNDER PACKAGE
SCALE:20X

4214936/A 12/2023

NOTES: (continued)

6. Laser cutting apertures with trapezoidal walls and rounded corners may offer better paste release. IPC-7525 may have alternate design recommendations.

IMPORTANT NOTICE AND DISCLAIMER

TI PROVIDES TECHNICAL AND RELIABILITY DATA (INCLUDING DATASHEETS), DESIGN RESOURCES (INCLUDING REFERENCE DESIGNS), APPLICATION OR OTHER DESIGN ADVICE, WEB TOOLS, SAFETY INFORMATION, AND OTHER RESOURCES “AS IS” AND WITH ALL FAULTS, AND DISCLAIMS ALL WARRANTIES, EXPRESS AND IMPLIED, INCLUDING WITHOUT LIMITATION ANY IMPLIED WARRANTIES OF MERCHANTABILITY, FITNESS FOR A PARTICULAR PURPOSE OR NON-INFRINGEMENT OF THIRD PARTY INTELLECTUAL PROPERTY RIGHTS.

These resources are intended for skilled developers designing with TI products. You are solely responsible for (1) selecting the appropriate TI products for your application, (2) designing, validating and testing your application, and (3) ensuring your application meets applicable standards, and any other safety, security, regulatory or other requirements.

These resources are subject to change without notice. TI grants you permission to use these resources only for development of an application that uses the TI products described in the resource. Other reproduction and display of these resources is prohibited. No license is granted to any other TI intellectual property right or to any third party intellectual property right. TI disclaims responsibility for, and you fully indemnify TI and its representatives against any claims, damages, costs, losses, and liabilities arising out of your use of these resources.

TI’s products are provided subject to TI’s Terms of Sale, TI’s General Quality Guidelines, or other applicable terms available either on ti.com or provided in conjunction with such TI products. TI’s provision of these resources does not expand or otherwise alter TI’s applicable warranties or warranty disclaimers for TI products. Unless TI explicitly designates a product as custom or customer-specified, TI products are standard, catalog, general purpose devices.

TI objects to and rejects any additional or different terms you may propose.

Copyright © 2026, Texas Instruments Incorporated

Last updated 10/2025