LMK61E07 Ultra-Low Jitter Programmable Oscillator With Internal EEPROM

1 Features

- Ultra-Low Noise, High Performance
  - Jitter: 90-fs RMS Typical f_{OUT} > 100 MHz on LMK61E07
  - PSRR: –70 dBc, Robust Supply Noise Immunity on LMK61E07
- Flexible Output Format on LMK61E07
  - LVPECL up to 1 GHz
  - LVDS up to 900 MHz
  - HCSL up to 400 MHz
- Total Frequency Tolerance of ±25 ppm
- System Level Features
  - Glitch-Less Frequency Margining: Up to ±1000 ppm From Nominal
  - Internal EEPROM: User Configurable Start-Up Settings
- Other Features
  - Device Control: Fast Mode I^2C up to 1000 kHz
  - 3.3-V Operating Voltage
  - Industrial Temperature Range (–40°C to +85°C)
  - 7-mm × 5-mm 6-Pin Package
- Default Frequency:
  - 70.656 MHz

2 Applications

- High-Performance Replacement for Crystal, SAW, or Silicon-Based Oscillators
- Switches, Routers, Network Line Cards, Base Band Units (BBU), Servers, Storage/SAN
- Test and Measurement
- Medical Imaging
- FPGA, Processor Attach
- xDSL, Broadcast Video

3 Description

The LMK61E07 family of ultra-low jitter PLLatinum™ programmable oscillators uses fractional-N frequency synthesizers with integrated VCOs to generate commonly used reference clocks. The output on LMK61E07 can be configured as LVPECL, LVDS, or HCSL. The device features self-start-up from on-chip EEPROM to generate a factory-programmed default output frequency, or the device registers and EEPROM settings are fully programmable in-system through an I^2C serial interface. The device provides fine and coarse frequency margining control through an I^2C serial interface, making it a digitally-controlled oscillator (DCXO).

The PLL feedback divider can be updated to adjust the output frequency without spikes or glitches in steps of <1ppb using a PFD of 12.5 MHz (R divider=4, doubler disabled) for compatibility with xDSL requirements, or in steps of <5.2 ppb using a PFD of 100 MHz (R divider=1, doubler enabled) for compatibility with broadcast video requirements. The frequency margining features also facilitate system design verification tests (DVT), such as standards compliance and system timing margin testing.

Package Information(1)

PART NUMBER	PACKAGE	PACKAGE SIZE(2)
LMK61E07	SIA (QFM, 6)	7.00 mm × 5.00 mm

(1) For all available packages, see the orderable addendum at the end of the data sheet.
(2) The package size (length × width) is a nominal value and includes pins, where applicable.

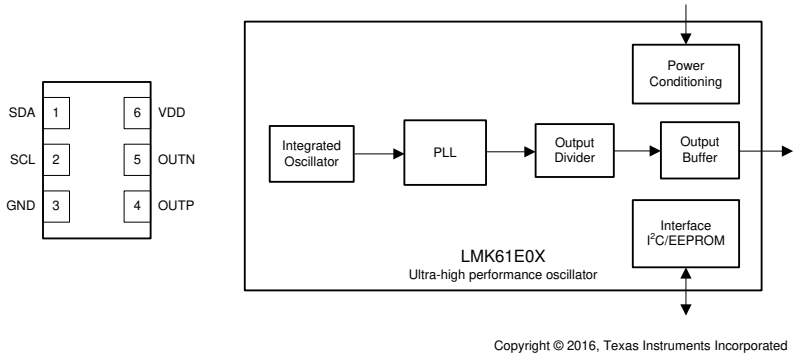

Copyright © 2016, Texas Instruments Incorporated

Pinout and Simplified Block Diagram

Table of Contents

1 Features....1
2 Applications....1
3 Description....1
4 Revision History....2
5 Pin Configuration and Functions....3
6 Specifications....4
6.1 Absolute Maximum Ratings....4
6.2 ESD Ratings....4
6.3 Recommended Operating Conditions....4
6.4 Thermal Information....4
6.5 Electrical Characteristics - Power Supply....5
6.6 LVPECL Output Characteristics....5
6.7 LVDS Output Characteristics....5
6.8 HCSL Output Characteristics....5
6.9 Frequency Tolerance Characteristics....6
6.10 Frequency Margining Characteristics....6
6.11 Power-On Reset Characteristics (VDD)....6
6.12 I²C-Compatible Interface Characteristics (SDA, SCL)....6
6.13 PSRR Characteristics....7
6.14 Other Characteristics....7
6.15 PLL Clock Output Jitter Characteristics....7
6.16 Typical 156.25-MHz Output Phase Noise Characteristics....8
6.17 Typical 161.1328125 MHz Output Phase Noise Characteristics....8
6.18 Additional Reliability and Qualification....8
6.19 Typical Characteristics....9
7 Parameter Measurement Information....13
7.1 Device Output Configurations....13
8 Detailed Description....15
8.1 Overview....15
8.2 Functional Block Diagram....15
8.3 Feature Description....15
8.4 Device Functional Modes....19
8.5 Programming....22
8.6 Register Maps....26
9 Application and Implementation....40
9.1 Application Information....40
9.2 Typical Application....40
9.3 Power Supply Recommendations....44
9.4 Layout....44
10 Device and Documentation Support....46
10.1 Documentation Support....46
10.2 Receiving Notification of Documentation Updates....46
10.3 Support Resources....46
10.4 Trademarks....46
10.5 Electrostatic Discharge Caution....46
10.6 Glossary....46
11 Mechanical, Packaging, and Orderable Information....46

4 Revision History

NOTE: Page numbers for previous revisions may differ from page numbers in the current version.

Changes from Revision A (October 2018) to Revision B (August 2023)	Page
• Updated the numbering format for tables, figures, and cross-references throughout the document	1
• Changed table from: Device Information to: Package Information	1
• Changed the OUTDIV_BY0 default from: 0x20 to: 0x46	26
• Changed the PLL_NDIV_BY0 default from: 0x64 to: 0x31	26
• Changed the PLL_FRACNUM_ BY1 default from: 0x00 to: 0x01	26
• Changed the PLL_FRACNUM_ BY0 default from: 0x00 to: 0x1F	26
• Changed the PLL_FRACDEN_ BY1 default from: 0x00 to: 0x02	26
• Changed the PLL_FRACDEN_ BY0 default from: 0x00 to: 0x71	26
• Changed the PLL_CALCTRL default from: 0x00 to: 0x09	26
• Changed ENCAL and AUTOSTRT register descriptions	29
• Changed XO_CAPCTRL [9:2] default from: 0x80 to: 0x00	30
• Changed PLL_LF_R2[7:0] default from: 0x08 to: 0x28	34
• Moved the *Power Supply Recommendations* and *Layout* sections to the *Application and Implementation* section	44

Changes from Revision * (December 2017) to Revision A (October 2018)	Page
• Changed the *Loop Filter Structure of PLL* graphic	18
• Changed the *LMK61E07 Interface and Control Block* graphic	19

Copyright © 2023 Texas Instruments Incorporated

5 Pin Configuration and Functions

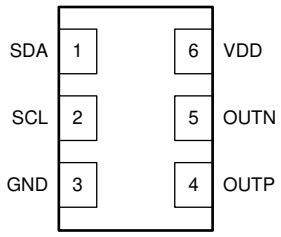

Figure 5-1. SIA Package 6-Pin QFM Top View

Table 5-1. Pin Functions

PIN		I/O	DESCRIPTION
NAME	NO.		
POWER			
GND	3	Ground	Device Ground.
VDD	6	Power	3.3-V Power Supply.
OUTPUT BLOCK			
OUTP	4	Output	Differential Output Pair (LVPECL, LVDS, or HCSL).
OUTN	5		
DIGITAL CONTROL / INTERFACES			
SCL	2	LVCMOS	I^2C Serial Clock (open-drain). Requires an external pullup resistor to VDD.
SDA	1	LVCMOS	I^2C Serial Data (bidirectional, open-drain). Requires an external pullup resistor to VDD.

Copyright © 2023 Texas Instruments Incorporated

6 Specifications

6.1 Absolute Maximum Ratings

over operating free-air temperature range (unless otherwise noted)(1)

		MIN	MAX	UNIT
VDD	Device supply voltage	–0.3	3.6	V
V_{IN}	Input voltage for logic inputs	–0.3	VDD + 0.3	V
V_{OUT}	Output voltage for clock outputs	–0.3	VDD + 0.3	V
T_J	Junction temperature		150	°C
T_{STG}	Storage temperature	–40	125	°C

(1) Stresses beyond those listed under *Absolute Maximum Ratings* may cause permanent damage to the device. These are stress ratings only, which do not imply functional operation of the device at these or any other conditions beyond those indicated under *Recommended Operating Conditions*. Exposure to absolute maximum-rated conditions for extended periods may affect device reliability.

6.2 ESD Ratings

			VALUE	UNIT
$V_{(ESD)}$	Electrostatic discharge	Human-body model (HBM), per ANSI/ESDA/JEDEC JS-001(1)	±2000	V
		Charged-device model (CDM), per JEDEC specification JESD22-C101(2)	±500	

(1) JEDEC document JEP155 states that 500-V HBM allows safe manufacturing with a standard ESD control process.
(2) JEDEC document JEP157 states that 250-V CDM allows safe manufacturing with a standard ESD control process.

6.3 Recommended Operating Conditions

over operating free-air temperature range (unless otherwise noted)

		MIN	NOM	MAX	UNIT
VDD	Device supply voltage	3.135	3.3	3.465	V
T_A	Ambient temperature	–40	25	85	°C
T_J	Junction temperature			115	°C
t_{RAMP}	VDD power-up ramp time	0.1		100	ms

6.4 Thermal Information

THERMAL METRIC(1)		LMK61E07 (2) (3) (4) SIA (QFM) 8 PINS			UNIT
		Airflow (LFM) 0	Airflow (LFM) 200	Airflow (LFM) 400	
$R_{\theta JA}$	Junction-to-ambient thermal resistance	54	44	41.2	°C/W
$R_{\theta JC(top)}$	Junction-to-case (top) thermal resistance	34	n/a	n/a	°C/W
$R_{\theta JB}$	Junction-to-board thermal resistance	36.7	n/a	n/a	°C/W
ψ_{JT}	Junction-to-top characterization parameter	11.2	16.9	21.9	°C/W
ψ_{JB}	Junction-to-board characterization parameter	36.7	37.8	38.9	°C/W
$R_{\theta JC(bot)}$	Junction-to-case (bottom) thermal resistance	n/a	n/a	n/a	°C/W

(1) For more information about traditional and new thermal metrics, see the *Semiconductor and IC Package Thermal Metrics* application report.
(2) The package thermal resistance is calculated on a 4-layer JEDEC board.
(3) Connected to GND with 3 thermal vias (0.3-mm diameter).
(4) ψ_{JB} (junction-to-board) is used when the main heat flow is from the junction to the GND pad. See *Layout Guidelines* for more information on ensuring good system reliability and quality.

Copyright © 2023 Texas Instruments Incorporated

6.5 Electrical Characteristics - Power Supply

VDD = 3.3 V ± 5%, T_A = –40°C to 85°C(1)

PARAMETER		TEST CONDITIONS	MIN	TYP	MAX	UNIT
IDD	Device current consumption	LVPECL(2)		162	208	mA
		HCSL		155	196	
IDD-PD	Device current consumption when output is disabled			120		

(1) Refer to *Parameter Measurement Information* for relevant test conditions.
(2) On-chip power dissipation should exclude 40 mW, dissipated in the 150-Ω termination resistors, from total power dissipation.

6.6 LVPECL Output Characteristics

VDD = 3.3 V ± 5%, T_A = –40C to 85°C(1)

PARAMETER		TEST CONDITIONS	MIN	TYP	MAX	UNIT
f_{OUT}	Output frequency(2)		10		1000	MHz
V_{OD}	Output voltage swing (V_{OH} - V_{OL})(2)		700	800	1200	mV
$V_{OUT, DIFF, PP}$	Differential output peak-to-peak swing			2 x $\|V_{OD}\|$		V
V_{OS}	Output common-mode voltage			VDD – 1.55		V
t_R / t_F	Output rise/fall time (20% to 80%)(3)			120	200	ps
PN-Floor	Output phase noise floor (f_{OFFSET} > 10 MHz)	156.25 MHz		–165		dBc/Hz
ODC	Output duty cycle(3)		45%		55%	

(1) Refer to *Parameter Measurement Information* for relevant test conditions.
(2) An output frequency over f_{OUT} maximum spec is possible, but output swing may be less than V_{OD} minimum spec.
(3) Ensured by characterization.

6.7 LVDS Output Characteristics

VDD = 3.3 V ± 5%, T_A = –40°C to 85°C(1)

PARAMETER		TEST CONDITIONS	MIN	TYP	MAX	UNIT
f_{OUT}	Output Frequency(1)		10		900	MHz
V_{OD}	Output Voltage Swing (V_{OH} - V_{OL})(1)		300	390	480	mV
$V_{OUT, DIFF, PP}$	Differential Output Peak-to-Peak Swing			2 x $\|V_{OD}\|$		V
V_{OS}	Output Common Mode Voltage			1.2		V
t_R / t_F	Output Rise/Fall Time (20% to 80%)(2)			150	250	ps
PN-Floor	Output Phase Noise Floor (f_{OFFSET} > 10 MHz)	156.25 MHz		–162		dBc/Hz
ODC	Output Duty Cycle(2)		45%		55%	
R_{OUT}	Differential Output Impedance			125		Ω

(1) An output frequency over f_{OUT} max spec is possible, but output swing may be less than V_{OD} min spec.
(2) Ensured by characterization.

6.8 HCSL Output Characteristics

VDD = 3.3 V ± 5%, T_A = –40°C to 85°C(1)

PARAMETER		TEST CONDITIONS	MIN	TYP	MAX	UNIT
f_{OUT}	Output frequency		10		400	MHz

Copyright © 2023 Texas Instruments Incorporated

VDD = 3.3 V ± 5%, T_A = –40°C to 85°C(1)

PARAMETER		TEST CONDITIONS	MIN	TYP	MAX	UNIT
V_{OH}	Output high voltage		600		850	mV
V_{OL}	Output low voltage		-100		100	mV
V_{CROSS}	Absolute crossing voltage(2) (3)		250		475	mV
$V_{CROSS-DELTA}$	Variation of V_{CROSS} (2) (3)		0		140	mV
dV/dt	Slew rate(4)		0.8		2	V/ns
PN-Floor	Output phase noise floor (f_{OFFSET} > 10 MHz)	100 MHz		–164		dBc/Hz
ODC	Output duty cycle(4)		45%		55%	

(1) Refer to *Parameter Measurement Information* for relevant test conditions.
(2) Measured from -150 mV to +150 mV on the differential waveform with the 300-mVpp measurement window centered on the differential zero crossing.
(3) Ensured by design.
(4) Ensured by characterization.

6.9 Frequency Tolerance Characteristics

VDD = 3.3 V ± 5%, T_A = –40°C to 85°C(1)

PARAMETER		TEST CONDITIONS	MIN	TYP	MAX	UNIT
f_T	Total frequency tolerance	All frequency bands and device junction temperature up to 115°C; includes initial freq tolerance, temperature & supply voltage variation, solder reflow, and 5 year aging at 40°C ambient temperature	–25		25	ppm

(1) Ensured by characterization.

6.10 Frequency Margining Characteristics

VDD = 3.3 V ± 5%, T_A = –40°C to 85°C

PARAMETER		TEST CONDITIONS	MIN	TYP	MAX	UNIT
f_T	Frequency margining range from nominal		–1000		1000	ppm

6.11 Power-On Reset Characteristics (VDD)

VDD = 3.3 V ± 5%, T_A = –40°C to 85°C

PARAMETER		TEST CONDITIONS	MIN	TYP	MAX	UNIT
V_{THRESH}	Threshold voltage(1)		2.72		2.95	V
V_{DROOP}	Allowable voltage droop(2)				0.1	V
$t_{STARTUP}$	Start-up time(1)	Time elapsed from VDD at 3.135 V to output enabled			10	ms

(1) Ensured by characterization.
(2) Ensured by design.

6.12 I²C-Compatible Interface Characteristics (SDA, SCL)

VDD = 3.3 V ± 5%, T_A = –40°C to 85°C(1) (2)

PARAMETER		TEST CONDITIONS	MIN	TYP	MAX	UNIT
V_{IH}	Input high voltage		1.2			V
V_{IL}	Input low voltage				0.6	V
I_{IH}	Input leakage		–40		40	µA
C_{IN}	Input capacitance			2		pF
C_{OUT}	Input capacitance				400	pF
V_{OL}	Output low voltage	I_{OL} = 3 mA			0.6	V

Copyright © 2023 Texas Instruments Incorporated

VDD = 3.3 V ± 5%, T_A = –40°C to 85°C(1) (2)

PARAMETER		TEST CONDITIONS	MIN	TYP	MAX	UNIT
f_{SCL}	I^2C clock rate		100		1000	kHz
t_{SU_STA}	START condition setup time	SCL high before SDA low	0.6			µs
t_{H_STA}	START condition hold time	SCL low after SDA low	0.6			µs
t_{PH_SCL}	SCL pulse width high		0.6			µs
t_{PL_SCL}	SCL pulse width low		1.3			µs
t_{H_SDA}	SDA hold time	SDA valid after SCL low	0		0.9	µs
t_{SU_SDA}	SDA setup time		115			ns
t_{R_IN} / t_{F_IN}	SCL/SDA input rise and fall time				300	ns
t_{F_OUT}	SDA output fall time	C_{BUS} = 10 pF to 400 pF			250	ns
t_{SU_STOP}	STOP condition setup time		0.6			µs
t_{BUS}	Bus free time between STOP and START		1.3			µs

(1) Total capacitive load for each bus line ≤ 400 pF.
(2) Ensured by design.

6.13 PSRR Characteristics

VDD = 3.3 V, T_A = 25°C, PLL bandwidth = 400 kHz, VCO Frequency = 5 GHz (Integer-N PLL), Output Divider = 32, Output Type = LVPECL/LVDS/HCSL(1)

PARAMETER		TEST CONDITIONS	MIN	TYP	MAX	UNIT
PSRR	Spurs Induced by 50-mV power supply ripple(2) (3) at 156.25-MHz output, all output types	Sine wave at 50 kHz		–70		dBc
		Sine wave at 100 kHz		–70		
		Sine wave at 500 kHz		–70		
		Sine wave at 1 MHz		–70		

(1) Refer to *Parameter Measurement InformationParameter Measurement Information* for relevant test conditions.
(2) Measured max spur level with 50-mVpp sinusoidal signal between 50 kHz and 1 MHz applied on VDD pin
(3) DJ_{SPUR} (ps, pk-pk) = [2 × 10(SPUR/20) / (π × f_{OUT})] × 1e6, where PSRR or SPUR in dBc and f_{OUT} in MHz.

6.14 Other Characteristics

VDD = 3.3 V ± 5%, T_A = –40°C to 85°C

PARAMETER		TEST CONDITIONS	MIN	TYP	MAX	UNIT
f_{VCO}	VCO frequency range		4.6		5.6	GHz

6.15 PLL Clock Output Jitter Characteristics

VDD = 3.3 V ± 5%, T_A = –40°C to 85°C(1) (3)

PARAMETER		TEST CONDITIONS	MIN	TYP	MAX	UNIT
RJ	RMS phase jitter(2) (12 kHz – 20 MHz)	f_{OUT} ≥ 100 MHz, Integer-N PLL, All output types		100	200	fs RMS
RJ	RMS phase jitter(2) (12 kHz – 20 MHz)	f_{OUT} ≥ 100 MHz, Fractional-N PLL, All output types		150	300	fs RMS

(1) Refer to *Parameter Measurement Information* for relevant test conditions.
(2) Ensured by characterization.
(3) Phase jitter measured with Agilent E5052 signal source analyzer.

Copyright © 2023 Texas Instruments Incorporated

6.16 Typical 156.25-MHz Output Phase Noise Characteristics

VDD = 3.3 V, T_A = 25°C, PLL bandwidth = 400 kHz, VCO Frequency = 5 GHz, Integer-N PLL, Output Divider = 32, Output Type = LVPECL/LVDS/HCSL(1) (2)

PARAMETER		OUTPUT TYPE			UNIT
		LVPECL	LVDS	HCSL	
phn_{10k}	Phase noise at 10-kHz offset	–143	–143	–143	dBc/Hz
Phn_{20k}	Phase noise at 20-kHz offset	–143	–143	–143	dBc/Hz
phn_{100k}	Phase noise at 100-kHz offset	–144	–144	–144	dBc/Hz
Phn_{200k}	Phase noise at 200-kHz offset	–145	–145	–145	dBc/Hz
phn_{1M}	Phase noise at 1-MHz offset	–150	–150	–150	dBc/Hz
phn_{2M}	Phase noise at 2-MHz offset	–154	–154	–154	dBc/Hz
phn_{10M}	Phase noise at 10-MHz offset	–165	–162	–164	dBc/Hz
phn_{20M}	Phase noise at 20-MHz offset	–165	–162	–164	dBc/Hz

(1) Refer to Parameter Measurement Information for relevant test conditions.
(2) Phase jitter measured with Agilent E5052 signal source analyzer using a differential-to-single ended converter (balun or buffer).

6.17 Typical 161.1328125 MHz Output Phase Noise Characteristics

VDD = 3.3 V, T_A = 25°C, PLL bandwidth = 400 kHz, VCO Frequency = 5.15625 GHz, Fractional-N PLL, Output Divider = 32, Output Type = LVPECL/LVDS/HCSL(1) (2)

PARAMETER		OUTPUT TYPE			UNIT
		LVPECL	LVDS	HCSL	
phn_{10k}	Phase noise at 10-kHz offset	–136	–136	–136	dBc/Hz
phn_{20k}	Phase noise at 20-kHz offset	–136	–136	–136	dBc/Hz
phn_{100k}	Phase noise at 100-kHz offset	–140	–140	–140	dBc/Hz
phn_{200k}	Phase noise at 200-kHz offset	–141	–141	–141	dBc/Hz
phn_{1M}	Phase noise at 1-MHz offset	–148	–148	–148	dBc/Hz
phn_{2M}	Phase noise at 2-MHz offset	–156	–156	–156	dBc/Hz
phn_{10M}	Phase noise at 10-MHz offset	–161	–159	–160	dBc/Hz
phn_{20M}	Phase noise at 20-MHz offset	–162	–160	–161	dBc/Hz

(1) Refer to Parameter Measurement Information for relevant test conditions.
(2) Phase jitter measured with Agilent E5052 signal source analyzer using a differential-to-single ended converter (balun or buffer).

6.18 Additional Reliability and Qualification

PARAMETER	CONDITION / TEST METHOD
Mechanical Shock	MIL-STD-202, Method 213
Mechanical Vibration	MIL-STD-202, Method 204
Moisture Sensitivity Level	J-STD-020, MSL3

Copyright © 2023 Texas Instruments Incorporated

6.19 Typical Characteristics

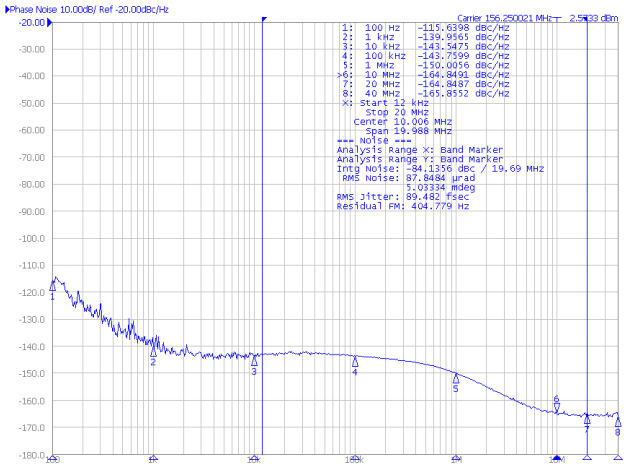

PLL Bandwidth = 400 kHz
Integer-N PLL
VCO Frequency = 5 GHz
Output Divider = 32

Figure 6-1. Closed-Loop Phase Noise of LVPECL Differential Output at 156.25 MHz

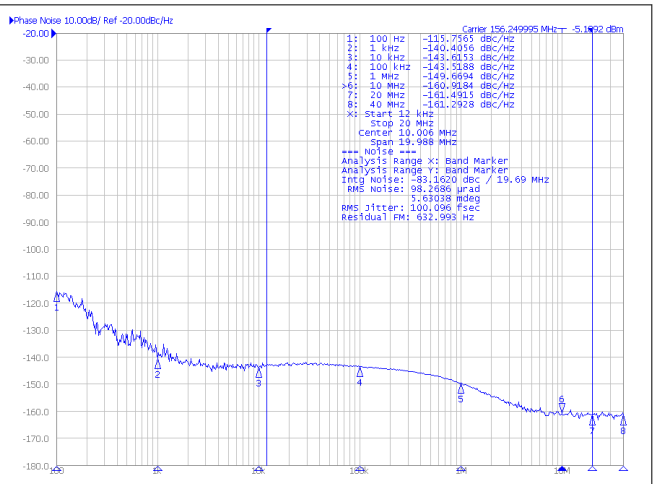

PLL Bandwidth = 400 kHz
Integer-N PLL
VCO Frequency = 5 GHz
Output Divider = 32

Figure 6-2. Closed Loop Phase Noise of LVDS Differential Output at 156.25 MHz

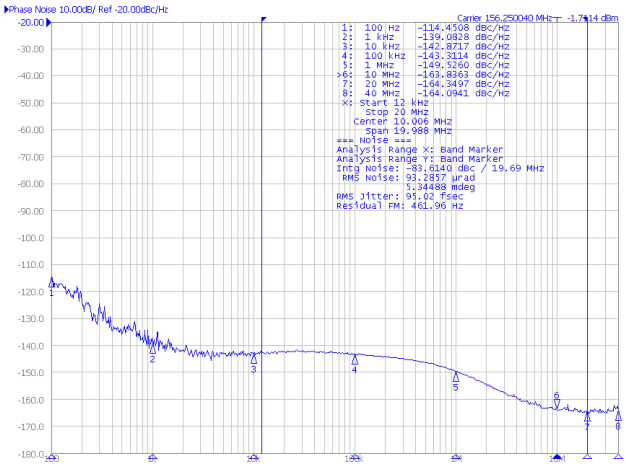

PLL Bandwidth = 400 kHz
Integer-N PLL
VCO Frequency = 5 GHz
Output Divider = 32

Figure 6-3. Closed-Loop Phase Noise of HCSL Differential Output at 156.25 MHz

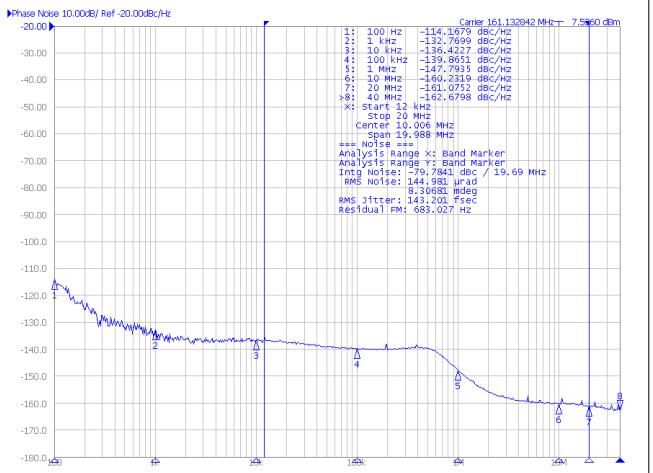

PLL Bandwidth = 400 kHz
Fractional-N PLL
VCO Frequency = 5.15625 GHz
Output Divider = 32

Figure 6-4. Closed-Loop Phase Noise of LVPECL Differential Output at 161.1328125 MHz

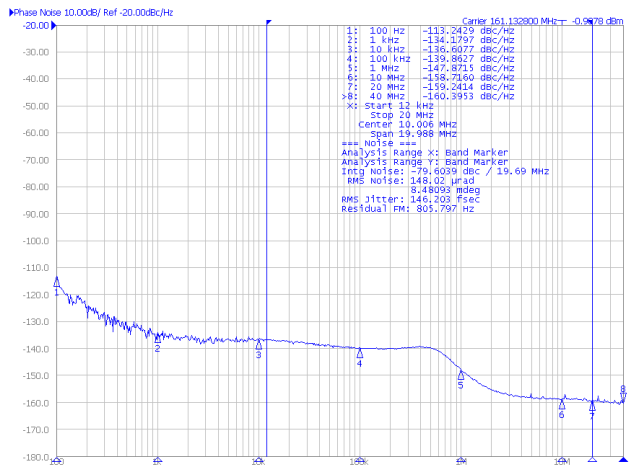

PLL Bandwidth = 400 kHz
VCO Frequency = 5.15625 GHz
Fractional-N PLL
Output Divider = 32

Figure 6-5. Closed Loop Phase Noise of LVDS Differential Output at 161.1328125 MHz

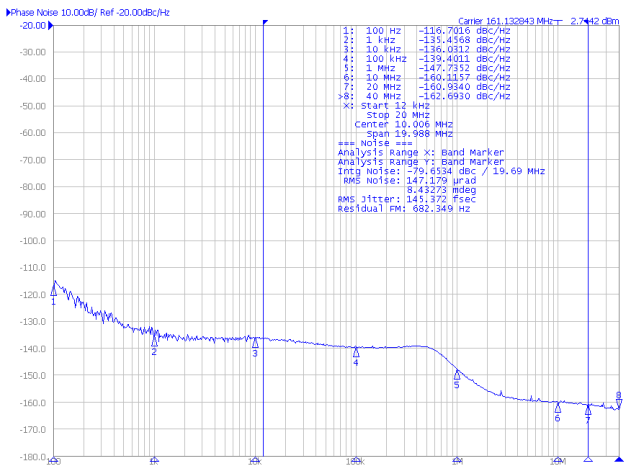

PLL Bandwidth = 400 kHz
VCO Frequency = 5.15625 GHz
Fractional-N PLL
Output Divider = 32

Figure 6-6. Closed-Loop Phase Noise of HCSL Differential Output at 161.1328125 MHz

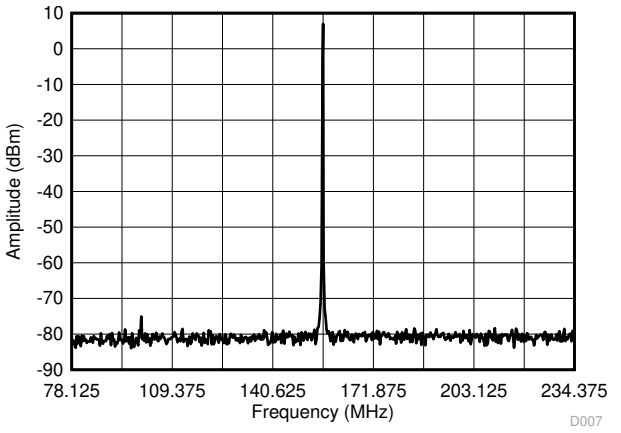

PLL Bandwidth = 400 kHz
VCO Frequency = 5 GHz
Integer-N PLL
Output Divider = 32

Figure 6-7. 156.25 ± 78.125-MHz LVPECL Differential Output Spectrum

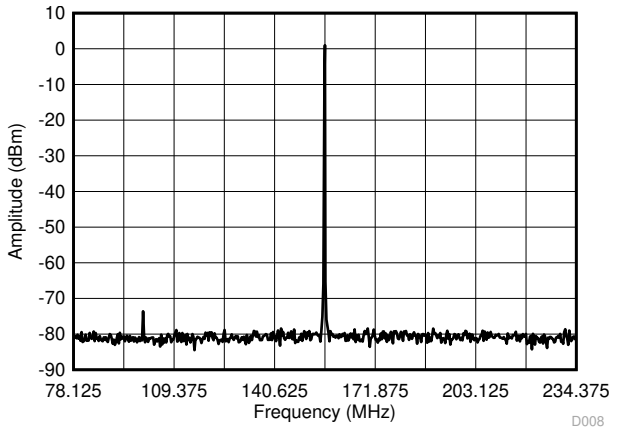

PLL Bandwidth = 400 kHz
VCO Frequency = 5 GHz
Integer-N PLL
Output Divider = 32

Figure 6-8. 156.25 ± 78.125-MHz LVDS Differential Output Spectrum

Copyright © 2023 Texas Instruments Incorporated

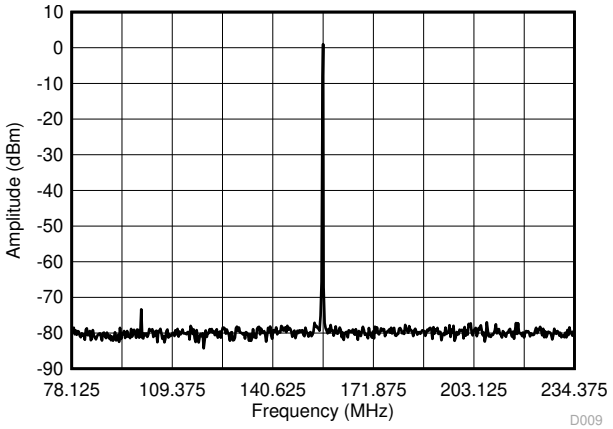

PLL Bandwidth = 400 kHz VCO Frequency = 5 GHz
Integer-N PLL Output Divider = 32

Figure 6-9. 156.25 ± 78.125-MHz HCSL Differential Output Spectrum

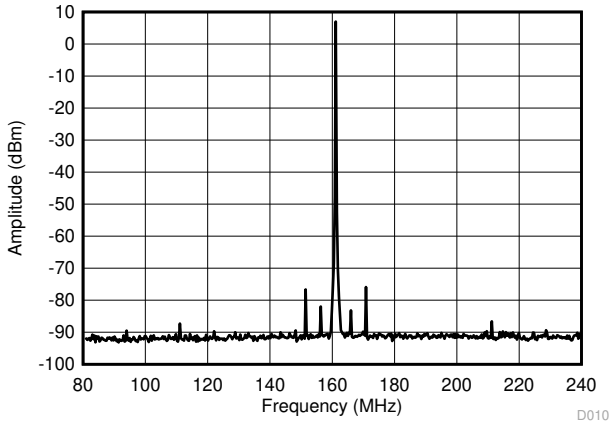

PLL Bandwidth = 400 kHz VCO Frequency = 5.15625 GHz
Fractional-N PLL Output Divider = 32

Figure 6-10. 161.1328125 ± 80.56640625-MHz LVPECL Differential Output Spectrum

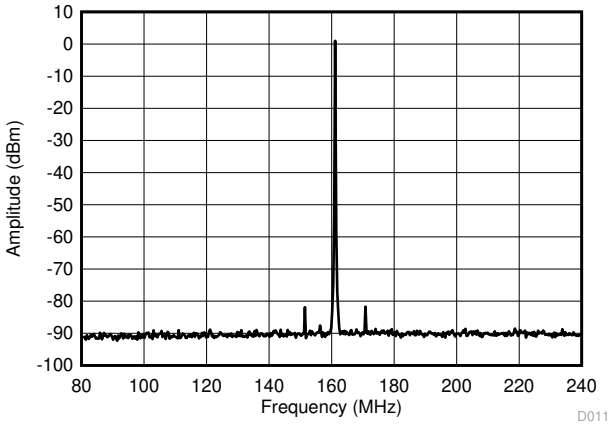

PLL Bandwidth = 400 kHz VCO Frequency = 5.15625 GHz
Fractional-N PLL Output Divider = 32

Figure 6-11. 161.1328125 ± 80.56640625-MHz LVDS Output Spectrum

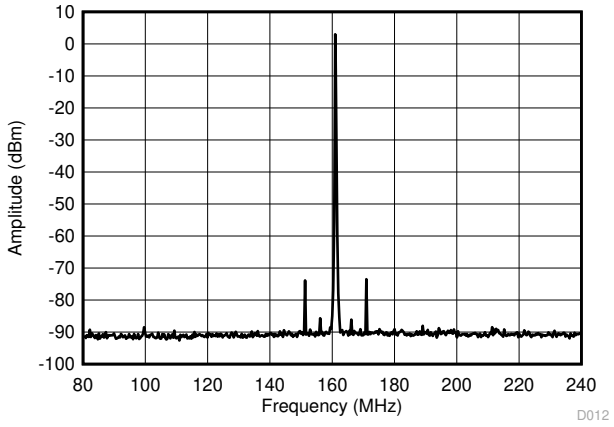

PLL Bandwidth = 400 kHz VCO Frequency = 5.15625 GHz
Fractional-N PLL Output Divider = 32

Figure 6-12. 161.1328125 ± 80.56640625-MHz HCSL Output Spectrum

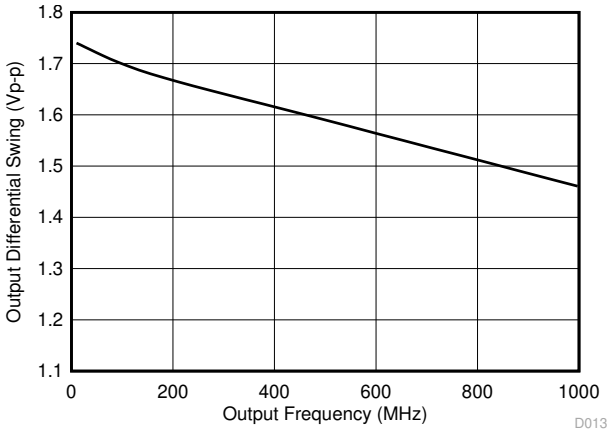

Figure 6-13. LVPECL Differential Output Swing vs Frequency

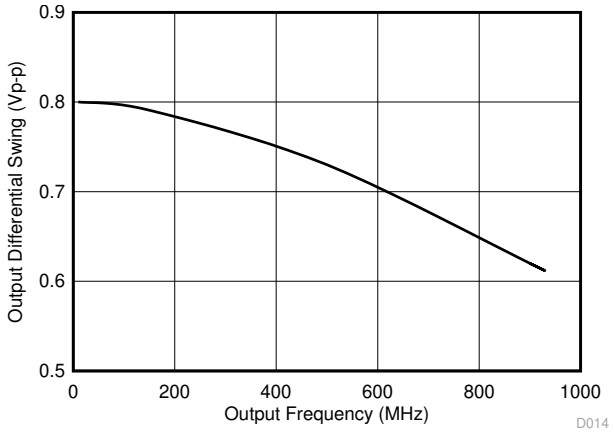

Figure 6-14. LVDS Differential Output Swing vs Frequency

Copyright © 2023 Texas Instruments Incorporated

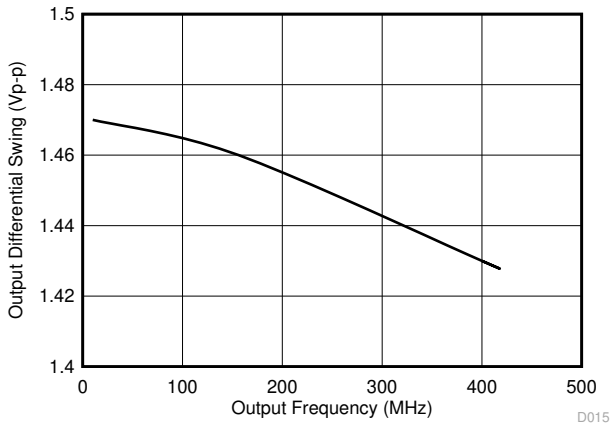

Figure 6-15. HCSL Differential Output Swing vs Frequency

Copyright © 2023 Texas Instruments Incorporated

7 Parameter Measurement Information

7.1 Device Output Configurations

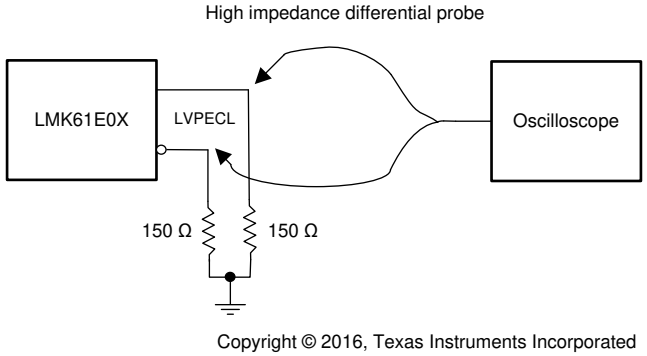

Copyright © 2016, Texas Instructions Incorporated

Figure 7-1. LVPECL Output DC Configuration During Device Test

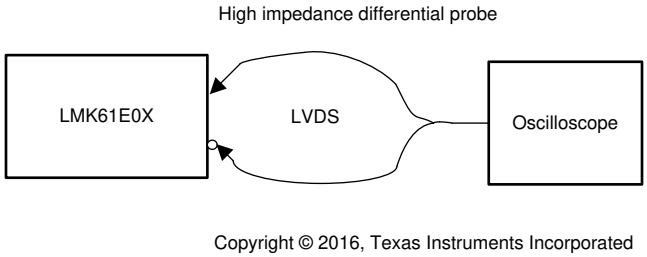

Copyright © 2016, Texas Instructions Incorporated

Figure 7-2. LVDS Output DC Configuration During Device Test

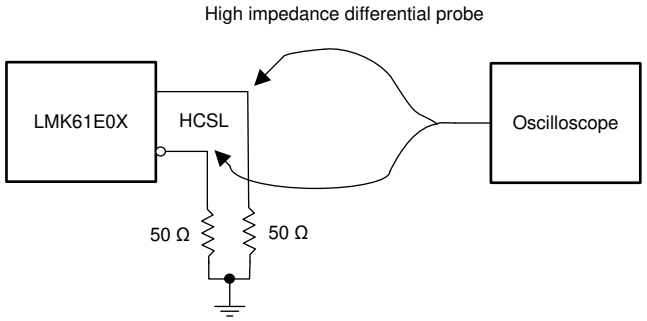

Copyright © 2016, Texas Instructions Incorporated

Figure 7-3. HCSL Output DC Configuration During Device Test

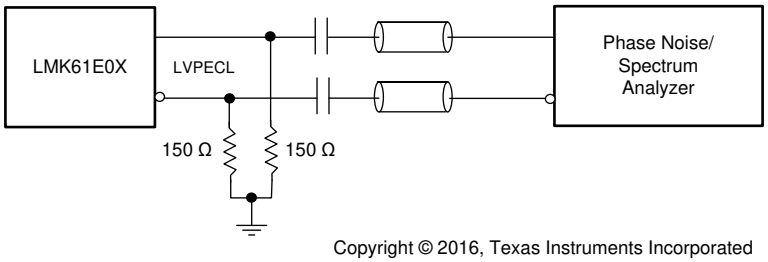

Copyright © 2016, Texas Instructions Incorporated

Figure 7-4. LVPECL Output AC Configuration During Device Test

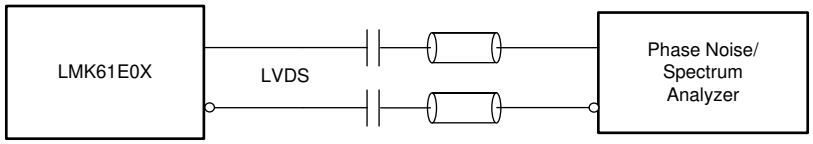

Copyright © 2016, Texas Instruments Incorporated

Figure 7-5. LVDS Output AC Configuration During Device Test

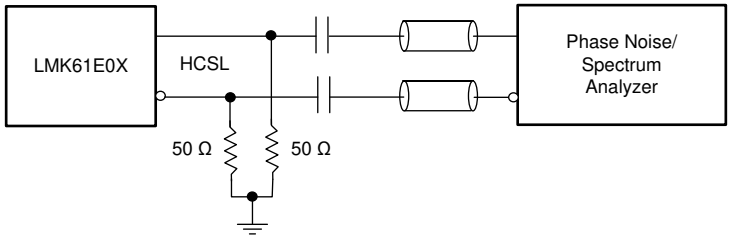

Copyright © 2016, Texas Instruments Incorporated

Figure 7-6. HCSL Output AC Configuration During Device Test

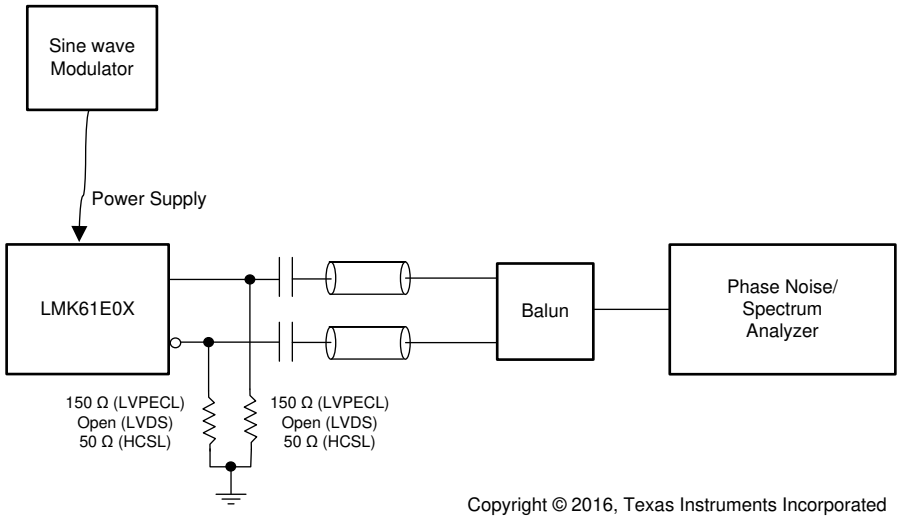

Copyright © 2016, Texas Instruments Incorporated

Figure 7-7. PSRR Test Setup

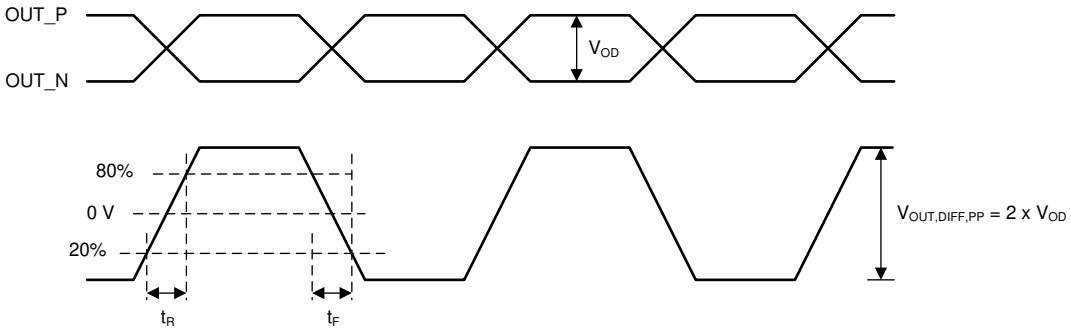

Figure 7-8. Differential Output Voltage and Rise/Fall Time

Copyright © 2023 Texas Instruments Incorporated

8 Detailed Description

8.1 Overview

The LMK61E07 is a programmable oscillator family that generates commonly used reference clocks. LMK61E07 supports differential outputs with less than 200 fs, rms max random jitter in integer PLL mode and less than 300 fs, rms max random jitter in fractional PLL mode.

8.2 Functional Block Diagram

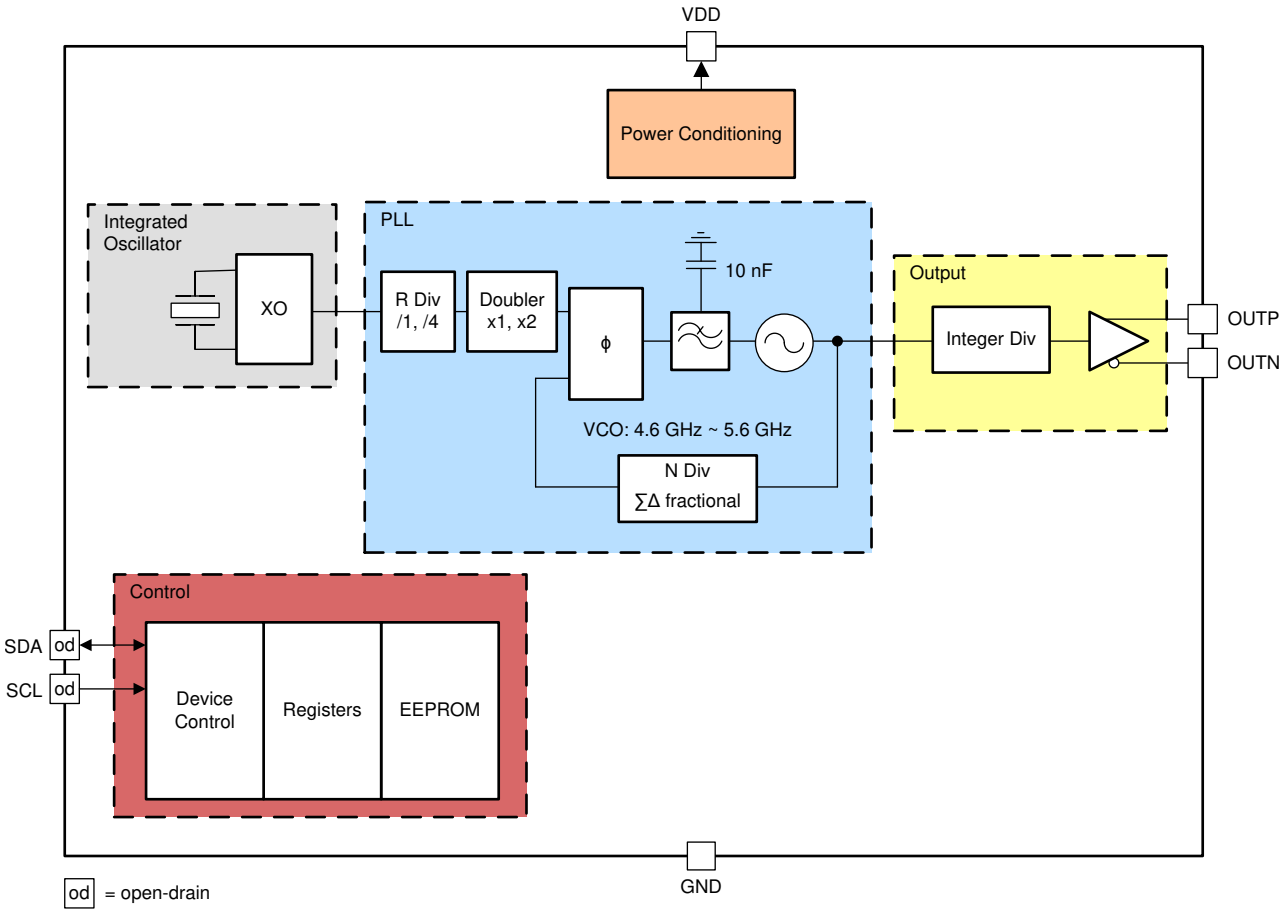

Copyright © 2017, Texas Instruments Incorporated

Note

Control blocks are compatible with 1.8-V, 2.5-V, and 3.3-V I/O voltage levels.

8.3 Feature Description

8.3.1 Device Block-Level Description

The LMK61E07 is an integrated oscillator that includes a 50-MHz crystal and a fractional PLL with integrated VCO that supports a frequency range of 4.6 GHz to 5.6 GHz. The PLL block consists of a phase frequency detector (PFD), charge pump, integrated passive loop filter, a feedback divider that can support both integer and fractional values and a delta-sigma engine for noise suppression in fractional PLL mode. Completing the device is the combination of an integer output divider and a differential output buffer. The PLL is powered by on-chip low dropout (LDO) linear voltage regulators and the regulated supply network is partitioned such that the sensitive analog supplies are running from separate LDOs than the digital supplies which use their own LDO. The LDOs provide isolation to the PLL from any noise in the external power supply rail. The device supports

fine and coarse frequency margining by changing the settings of the integrated oscillator and the output divider, respectively.

8.3.2 Device Configuration Control

The LMK61E07 supports I^{2}C programming interface where an I^{2}C host can update any device configuration after the device enables the host interface and the host writes a sequence that updates the device registers. Once the device configuration is set, the host can also write to the on-chip EEPROM for a new set of power-up defaults based on the configuration pin settings in the soft pin configuration mode.

8.3.3 Register File Reference Convention

Figure 8-1 shows the method that this document employs to refer to an individual register bit or a grouping of register bits. If a drawing or text references an individual bit, the format is to specify the register number first and the bit number second. The LMK61E07 contains 38 registers that are 8 bits wide. The register addresses and the bit positions both begin with the number zero (0). The bit address is placed in brackets or after a period. The first bit in the register file is address R0[0] or R0.0 meaning that it is located in Register 0 and is bit position 0. The last bit in the register file is address R72[7] or R72.7, referring to the 8th bit of register address 72 (the 73rd register in the device). Figure 8-1 also lists specific bit positions as a number contained within a box. A box with the register address encloses the group of boxes that represent the bits relevant to the specific device circuitry in context.

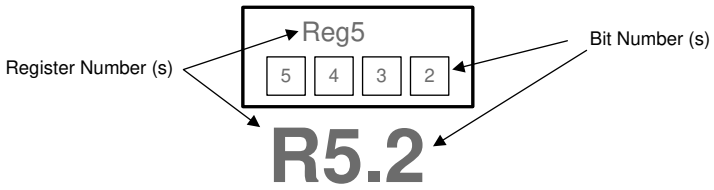

Figure 8-1. LMK61E07 Register Reference Format

8.3.4 Configuring the PLL

The PLL in LMK61E07 can be configured to accommodate various output frequencies either through I^{2}C programming interface or, in the absence of programming the PLL defaults stored in EEPROM are loaded on power up. The PLL can be configured by setting the Reference Doubler, Integrated PLL Loop Filter, Feedback Divider, and Output Divider. The corresponding register addresses and configurations are detailed in the description section of each block below.

For the PLL to operate in closed-loop mode, the following condition in Equation 1 has to be met.

$$F_{VCO} = F_{REF} \times (D/R) \times [(INT + NUM/DEN)] \quad (1)$$

where

- F_{VCO}: PLL/VCO Frequency (4.6 GHz to 5.6 GHz)
- F_{REF}: 50-MHz reference input
- D: Reference input doubler, 1=Disabled, 2=Enabled
- R: Reference input divider, 1=Divider bypass, 4=Divide-by-4
- INT: PLL feedback divider integer value (12 bits, 1 to 4095)
- NUM: PLL feedback divider fractional numerator value (22 bits, 0 to 4194303)
- DEN: PLL feedback divider fractional denominator value (22 bits, 1 to 4194303)

On LMK61E07, the output frequency is related to the VCO frequency as given in Equation 2.

$$F_{OUT} = F_{VCO} / OUTDIV \quad (2)$$

where

- OUTDIV: Output divider value (9 bits, 5 to 511)

Copyright © 2023 Texas Instruments Incorporated

The output frequency step size for every bit change in the numerator of the PLL fractional feedback divider is given in Equation 3.

$$STEPSIZE = (F_{REF} \times D)/ (R \times OUTDIV \times DEN) \quad (3)$$

8.3.5 Integrated Oscillator

The integrated oscillator in LMK61E07 features programmable load capacitances that can be set for the device to either operate at exactly its nominal oscillation frequency or operate at a fixed frequency offset from its nominal oscillation frequency. This is done by programming R16 and R17. More details on frequency margining are provided in *Fine Frequency Margining*.

8.3.6 Reference Divider and Doubler

The reference path has a divider and frequency doubler. The reference divider can be bypassed by programming R24[0] = 0 or can be set to divide-by-4 by programming R24[0] = 1. Enabling the divider results in a lower comparison frequency for the PLL and would result in a 6-dB increase in the in-band phase noise at the output of the LMK61E07 but would result in a finer frequency resolution at the output for every bit change in the numerator of fractional feedback divider. The reference doubler can be enabled by programming R34[5] = 1. Bypassing the divider allows for a higher comparison rate and improved in-band phase noise at the output of the LMK61E07. Enabling the doubler allows a higher comparison frequency for the PLL and would result in a 3-dB reduction in the in-band phase noise at the output of the LMK61E07. Enabling the doubler also results in higher reference and phase detector spurs which will be minimized by enabling the higher order components (R3, C3) of the loop filter and programming them to appropriate values. Disabling the doubler would result in a finer frequency resolution at the output for every bit change in the numerator of the fractional feedback divider and higher in-band phase noise on the device output than when the doubler is enabled. However, the reference and phase detector spurs would be lower on the device output than when the doubler is enabled.

8.3.7 Phase Frequency Detector

The Phase Frequency Detector (PFD) of the PLL takes inputs from the reference path and the feedback divider output and produces an output that is dependent on the phase and frequency difference between the two inputs. The input frequency of the PFD is equal to the 50-MHz reference frequency doubled if the reference doubler is enabled and then divided by 4 if the reference divider is enabled. The feedback frequency to the PFD must equal the reference path frequency to the PFD for the PLL to lock.

8.3.8 Feedback Divider (N)

The N divider of the PLL includes fractional compensation and can achieve any fractional denominator (DEN) from 1 to 4,194,303. The integer portion, INT (valid range 1-4095), is the whole part of the N divider value and the fractional portion, NUM / DEN, is the remaining fraction. INT, NUM, and DEN are programmed in R25/R26, R27/R28/R29, and R30/R31/R32, respectively. The total programmed N divider value, N, is determined by: N = INT + NUM / DEN. The output of the N divider sets the PFD frequency to the PLL. The feedback frequency to the PFD must equal the reference path frequency to the PFD for the PLL to lock. In DCXO mode, the NUM registers can be reprogrammed MSB first and LSB last to update the output frequency without glitches or spikes.

8.3.9 Fractional Engine

The delta signal modulator is a key component of the fractional engine and is involved in noise shaping for better phase noise and spurs in the band of interest. The order of the delta sigma modulator is selectable between the integer mode and third order for fractional PLL mode, and it can be programmed in R33[1:0]. Dithering can be programmed in R33[3:2] and should be disabled for integer PLL mode and set to weak for fractional PLL mode.

8.3.10 Charge Pump

The PLL uses either 1.6-mA charge pump slices when the PLL is set to fractional mode, or 6.4-mA slices when the PLL is set to integer mode. These slices can be selected by programming R34[3:0]. When the PLL is set to fractional mode, a phase shift must be introduced to maintain a linear response and ensure consistent performance across operating conditions and a value of 0x2 should be programmed in R35[6:4]. When the PLL is set to integer mode, a value of 0x0 should be programmed in R35[6:4].

Copyright © 2023 Texas Instruments Incorporated

8.3.11 Loop Filter

The LMK61E07 features a fully integrated loop filter for the PLL that supports programmable loop bandwidth from 100 kHz to 1 MHz. The loop filter components, R2, C1, R3, and C3, can be configured by programming R36, R37, R38, and R39, respectively. The LMK61E07 features a fixed value of C2 of 10 nF. When the PLL is configured in fractional mode, R35[2] should be set to 1. When the reference doubler is disabled for integer mode PLL, R35[2] should be set to 0 and R38[6:0] should be set to 0x00. When the reference doubler is enabled for integer mode PLL, R35[2] should be set to 1 and R38 and R39 are written with the appropriate values. Figure 8-2 shows the loop filter structure of the PLL. It is important to set the PLL to the best possible bandwidth to minimize output jitter.

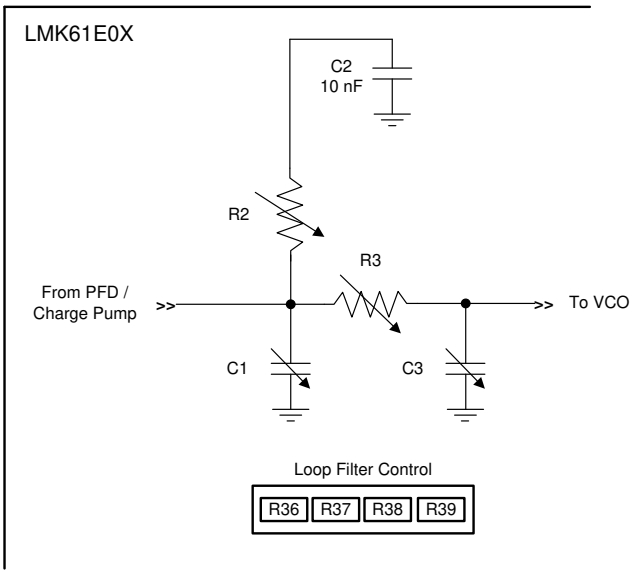

Copyright © 2016, Texas Instruments Incorporated

Figure 8-2. Loop Filter Structure of PLL

8.3.12 VCO Calibration

The PLL in LMK61E07 is made of LC VCO that is designed using high-Q monolithic inductors to oscillate between 4.6 GHz and 5.6 GHz and has low phase noise characteristics. The VCO must be calibrated to ensure that the clock outputs deliver optimal phase noise performance. Fundamentally, a VCO calibration establishes an optimal operating point within the tuning range of the VCO. Setting R72[1] to 1 causes a VCO recalibration and is necessary after device reconfiguration. VCO calibration automatically occurs on device power up.

8.3.13 High-Speed Output Divider

The high-speed output divider supports divide values of 5 to 511 and is programmed in R22 and R23. The output divider also supports coarse frequency margining that can initiate as low as a 5% change in the output frequency.

8.3.14 High-Speed Clock Output

The clock output on LMK61E07 can be configured as LVPECL, LVDS, or HCSL by programming R21[1:0]. Interfacing to LVPECL, LVDS, or HCSL receivers are done either with direct coupling or with AC-coupling capacitor as shown in Figure 7-1 through Figure 7-6.

The LVDS output structure has integrated 125 Ω termination between each side (P and N) of the differential pair. The HCSL output structure is open drain and can be DC or AC coupled to HCSL receivers with appropriate termination scheme. The LVPECL output structure is an emitter follower requiring external termination.

8.3.15 Device Status

The PLL loss of lock and PLL calibration status can be monitored by reading R66[1:0]. These bits represent a logic-high interrupt output and are self-cleared once the readback is complete.

Copyright © 2023 Texas Instruments Incorporated

8.3.15.1 Loss of Lock

The PLL loss of lock detection circuit is a digital circuit that detects any frequency error, even a single cycle slip. Loss of lock may occur when an incorrect PLL configuration is programmed or the VCO has not been recalibrated.

8.4 Device Functional Modes

8.4.1 Interface and Control

The host (DSP, Microcontroller, FPGA, and so forth) configures and monitors the LMK61E07 through the I^2C port. The host reads and writes to a collection of control and status bits called the register map. The device blocks can be controlled and monitored through a specific grouping of bits located within the register file. The host controls and monitors certain device Wide critical parameters directly through register control and status bits. In the absence of the host, the LMK61E07 can be configured to operate from its on-chip EEPROM. The EEPROM array is automatically copied to the device registers upon power up. The user has the flexibility to rewrite the contents of EEPROM from the SRAM up to 100 times.

Within the device registers, there are certain bits that have read or write access. Other bits are read-only (an attempt to write to a read-only bit will not change the state of the bit). Certain device registers and bits are reserved meaning that they must not be changed from their default reset state. Figure 8-3 shows interface and control blocks within LMK61E07 and the arrows refer to read access from and write access to the different embedded memories (EEPROM, SRAM).

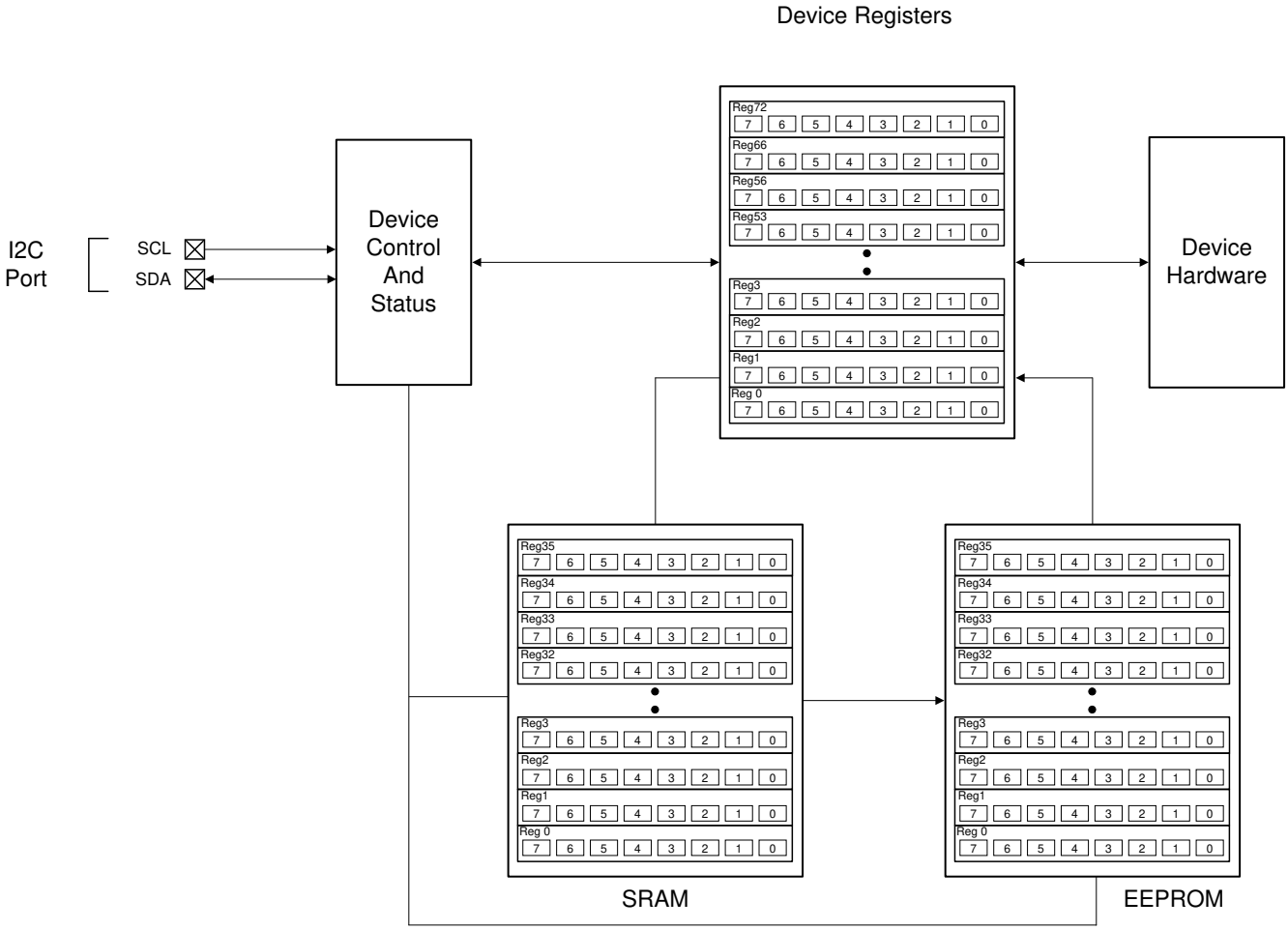

Figure 8-3. LMK61E07 Interface and Control Block

8.4.2 DCXO Mode and Frequency Margining

8.4.2.1 DCXO Mode

In applications that require the LMK61E07 as part of a PLL that is implemented in another device like an FPGA, it can be used as a digitally-controlled oscillator (DCXO) where the frequency control word can be passed along through I^2C to the LMK61E07 on a regular basis, which in turn updates the numerator of its fractional feedback divider by the required amount. In such a scenario, the entire portion of numerator for the fractional feedback divider must be written on every attempt MSB first and LSB last to ensure that the output frequency does not jump during the update, as described in *Feedback Divider (N)*. In every update cycle, a total of 46 bits needs to be updated leading to a maximum update rate of 8.7 kHz with a maximum I^2C rate of 1 Mbps. The minimum step size of 0.55 ppb (parts per billion) is achieved for the maximum VCO frequency of 5.6 GHz and when reference input doubler is disabled and reference divider is set to 4. The minimum step size of 4.96 ppb (parts per billion) is achieved for the maximum VCO frequency of 4.8 GHz and when reference input doubler is enabled and reference divider is bypassed.

8.4.2.2 Fine Frequency Margining

IEEE802.3 dictates that Ethernet frames stay compliant to the standard specifications when clocked with a reference clock that is within ±100 ppm of its nominal frequency. In the worst case, an RX node with its local reference clock at –100 ppm from its nominal frequency should be able to work seamlessly with a TX node that has its own local reference clock at +100 ppm from its nominal frequency. Without any clock compensation on the RX node, the read pointer will severely lag behind the write pointer and cause FIFO overflow errors. On the contrary, when the RX node's local clock operates at +100 ppm from its nominal frequency and the TX node's local clock operates at –100 ppm from its nominal frequency, FIFO underflow errors occur without any clock compensation.

To prevent such overflow and underflow errors from occurring, modern ASICs and FPGAs include a clock compensation scheme that introduces elastic buffers. Such a system, shown in Figure 8-4, is validated thoroughly during the validation phase by interfacing slower nodes with faster ones and ensuring compliance to IEEE802.3. The LMK61E07 provides the ability to fine tune the frequency of its outputs based on changing its load capacitance for the integrated oscillator. This fine tuning can be done through I^2C as described in *Integrated Oscillator*. The change in load capacitance is implemented in a manner such that the output of LMK61E07 undergoes a smooth monotonic change in frequency.

8.4.2.3 Coarse Frequency Margining

Certain systems require the processors to be tested at clock frequencies that are slower or faster by 5% or 10%. The LMK61E07 offers the ability to change its output divider for the desired change from its nominal output frequency as explained in *High-Speed Output Divider*.

Copyright © 2023 Texas Instruments Incorporated

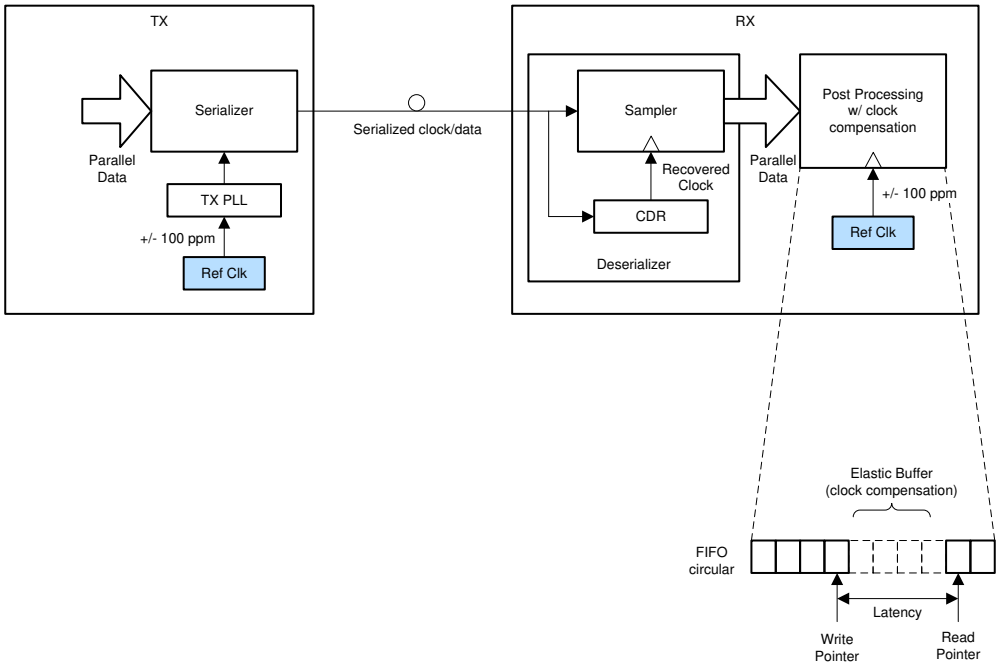

Figure 8-4. System Implementation With Clock Compensation for Standards Compliance

8.5 Programming

8.5.1 I²C Serial Interface

The I²C port on the LMK61E07 works as a target device and supports both the 100-kHz standard mode and 1-MHz fast mode operations. Fast mode imposes a glitch tolerance requirement on the control signals. Therefore, the input receivers ignore pulses of less than 50-ns duration. The I²C timing is given in *I²C-Compatible Interface Characteristics (SDA, SCL)*. The timing diagram is given in Figure 8-5.

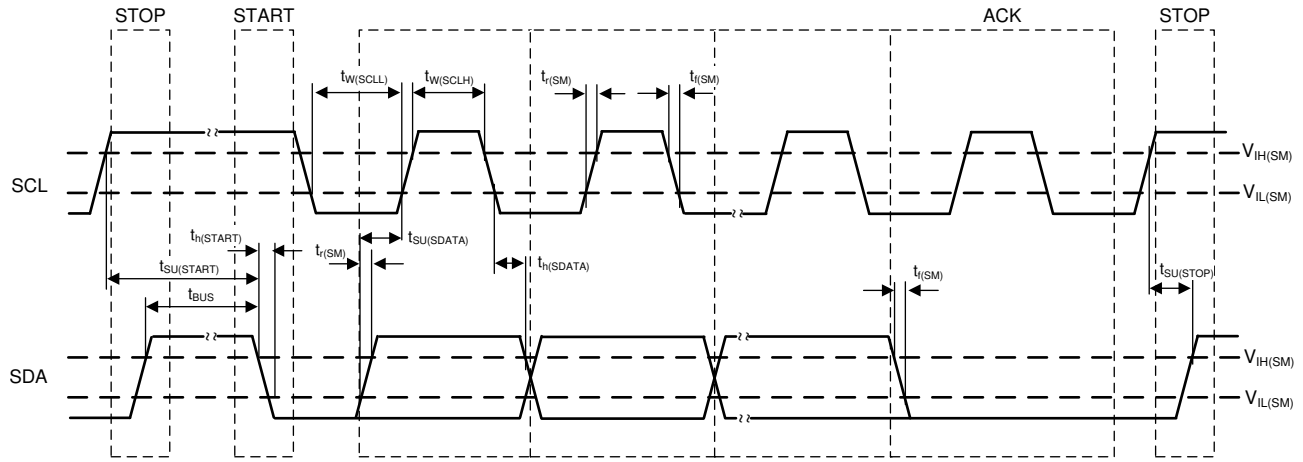

Figure 8-5. I²C Timing Diagram

In an I²C bus system, the LMK61E07 acts as a target device and is connected to the serial bus (data bus SDA and lock bus SCL). These are accessed through a 7-bit target address transmitted as part of an I²C packet. Only the device with a matching target address responds to subsequent I²C commands. The device target address is 1011001 or 0x59.

During the data transfer through the I²C interface, one clock pulse is generated for each data bit transferred. The data on the SDA line must be stable during the high period of the clock. The high or low state of the data line can change only when the clock signal on the SCL line is low. The start data transfer condition is characterized by a high-to-low transition on the SDA line while SCL is high. The stop data transfer condition is characterized by a low-to-high transition on the SDA line while SCL is high. The start and stop conditions are always initiated by the controller. Every byte on the SDA line must be eight bits long. Each byte must be followed by an acknowledge bit and bytes are sent MSB first. The I²C register structure of the LMK61E07 is shown in Figure 8-6.

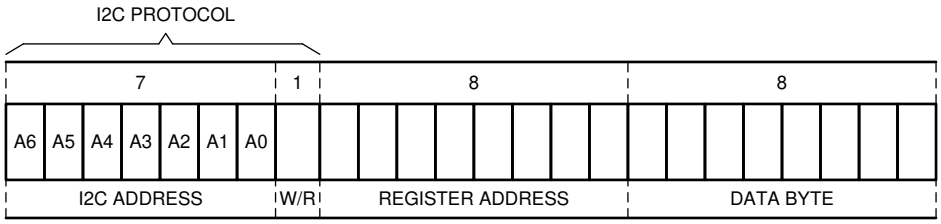

Figure 8-6. I²C Register Structure

The acknowledge bit (A) or non-acknowledge bit (A') is the 9th bit attached to any 8-bit data byte and is always generated by the receiver to inform the transmitter that the byte has been received (when A = 0) or not (when A' = 0). A = 0 is done by pulling the SDA line low during the 9th clock pulse and A' = 0 is done by leaving the SDA line high during the 9th clock pulse.

The I²C controller initiates the data transfer by asserting a start condition which initiates a response from all target devices connected to the serial bus. Based on the 8-bit address byte sent by the controller over the SDA line (consisting of the 7-bit target address (MSB first) and an R/W' bit), the device whose address corresponds to the transmitted address responds by sending an acknowledge bit. All other devices on the bus remain idle while the selected device waits for data transfer with the controller.

Copyright © 2023 Texas Instruments Incorporated

After the data transfer has occurred, stop conditions are established. In write mode, the controller asserts a stop condition to end data transfer during the 10th clock pulse following the acknowledge bit for the last data byte from the target. In read mode, the controller receives the last data byte from the target but does not pull SDA low during the 9th clock pulse. This is known as a non-acknowledge bit. By receiving the non-acknowledge bit, the target knows the data transfer is finished and enters the idle mode. The controller then takes the data line low during the low period before the 10th clock pulse, and high during the 10th clock pulse to assert a stop condition. A generic transaction is shown in Figure 8-7.

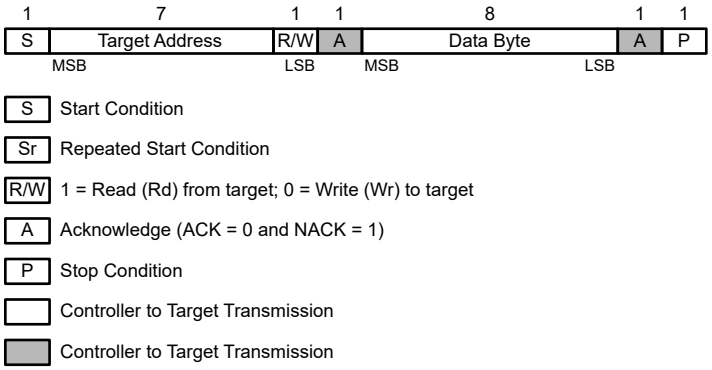

Figure 8-7. Generic Programming Sequence

The LMK61E07 I^{2}C interface supports *Block Register Write/Read*, *Read/Write SRAM*, and *Read/Write EEPROM* operations. For *Block Register Write/Read* operations, the I^{2}C controller can individually access addressed registers that are made of an 8-bit data byte.

8.5.2 Block Register Write

The I^{2}C *Block Register Write* transaction is illustrated in Figure 8-8 and consists of the following sequence.

1. Controller issues a Start Condition.
2. Controller writes the 7-bit Target Address following by a Write bit.
3. Controller writes the 8-bit Register address as the CommandCode of the programming sequence.
4. Controller writes one or more data bytes each of which should be acknowledged by the target. The target increments the internal register address after each byte.
5. Controller issues a Stop Condition to terminate the transaction.

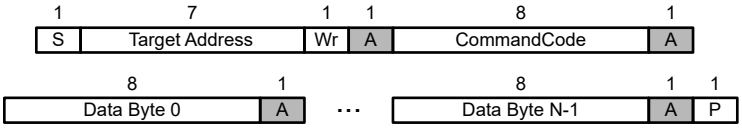

Figure 8-8. Block Register Write Programming Sequence

8.5.3 Block Register Read

The I^{2}C *Block Register Read* transaction is illustrated in Figure 8-9 and consists of the following sequence.

1. Controller issues a Start Condition.
2. Controller writes the 7-bit Target Address followed by a Write bit.
3. Controller writes the 8-bit Register address as the CommandCode of the programming sequence.
4. Controller issues a Repeated Start Condition.
5. Controller writes the 7-bit Target Address following by a Read bit.
6. Target returns one or more data bytes as long as the Controller continues to acknowledge them. The target increments the internal register address after each byte.
7. Controller issues a Stop Condition to terminate the transaction.

Copyright © 2023 Texas Instruments Incorporated

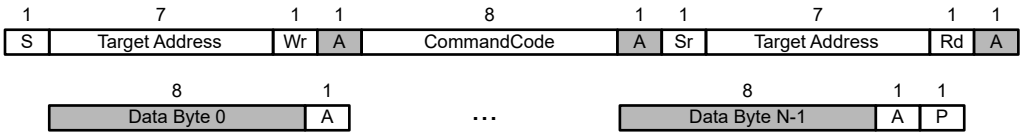

Figure 8-9. Block Register Read Programming Sequence

8.5.4 Write SRAM

The on-chip SRAM is a volatile, shadow memory array used to temporarily store register data, and is intended only for programming the non-volatile EEPROM. The SRAM has the identical data format as the EEPROM map. The register configuration data can be transferred to the SRAM array through special memory access registers in the register map. To successfully program the SRAM, the complete base array and at least one page should be written. The following details the programming sequence to transfer the device registers into the SRAM.

1. Program the device registers to match a desired setting.
2. Write a 1 to R49[6]. This ensures that the device registers are copied to the SRAM.

The SRAM can also be written with particular values according to the following programming sequence.

1. Write the SRAM address in R51.
2. Write the desired data byte in R53 in the same I^2C transaction and this data byte will be written to the address specified in the step above. Any additional access that is part of the same transaction will cause the SRAM address to be incremented and a write will take place to the next SRAM address. Access to SRAM will terminate at the end of current I^2C transaction.

Note

It is possible to increment SRAM address incorrectly when 2 successive accesses are made to R51.

8.5.5 Write EEPROM

The on-chip EEPROM is a non-volatile memory array used to permanently store register data for a custom device start-up configuration setting to initialize registers upon power up or POR. The EEPROM is comprised of bits shown in the EEPROM Map. The transfer must first happen to the SRAM and then to the EEPROM. During *EEPROM write*, R49[2] is a 1 and the EEPROM contents cannot be accessed. The following details the programming sequence to transfer the entire contents of SRAM to EEPROM.

1. Make sure the *Write SRAM* procedure (Write SRAM) was done to commit the register settings to the SRAM with start-up configurations intended for programming to the EEPROM.
2. Write 0xBE to R56. This provides basic protection from inadvertent programming of EEPROM.
3. Write a 1 to R49[0]. This programs the entire SRAM contents to EEPROM. Once completed, the contents in R48 will increment by 1. R48 contains the total number of EEPROM programming cycles that are successfully completed.
4. Write 0x00 to R56 to protect against inadvertent programming of EEPROM.

8.5.6 Read SRAM

The contents of the SRAM can be read out, one word at a time, starting with that of the requested address. Following details the programming sequence for an SRAM read by address.

1. Write the SRAM address in R51.
2. The SRAM data located at the address specified in the step above can be obtained by reading R53 in the same I^2C transaction. Any additional access that is part of the same transaction will cause the SRAM address to be incremented and a read will take place of the next SRAM address. Access to SRAM will terminate at the end of current I^2C transaction.

Note

It is possible to increment SRAM address incorrectly when 2 successive accesses are made to R51.

Copyright © 2023 Texas Instruments Incorporated

8.5.7 Read EEPROM

The contents of the EEPROM can be read out, one word at a time, starting with that of the requested address. Following details the programming sequence for an EEPROM read by address.

1. Write the EEPROM address in R51.
2. The EEPROM data located at the address specified in the step above can be obtained by reading R52 in the same I^2C transaction. Any additional access that is part of the same transaction will cause the EEPROM address to be incremented and a read will take place of the next EEPROM address. Access to EEPROM will terminate at the end of current I^2C transaction.

Note

It is possible to increment EEPROM address incorrectly when 2 successive accesses are made to R51.

Copyright © 2023 Texas Instruments Incorporated

8.6 Register Maps

Any bit that is labeled as *RESERVED* should be written with a 0.

Table 8-1. EEPROM Map

BYTE NO.	BIT7	BIT6	BIT5	BIT4	BIT3	BIT2	BIT1	BIT0
0	RESERVED	RESERVED	RESERVED	RESERVED	RESERVED	RESERVED	RESERVED	RESERVED
1	RESERVED	RESERVED	RESERVED	RESERVED	RESERVED	RESERVED	RESERVED	RESERVED
2	RESERVED	RESERVED	RESERVED	RESERVED	RESERVED	RESERVED	RESERVED	RESERVED
3	RESERVED	RESERVED	RESERVED	RESERVED	RESERVED	RESERVED	RESERVED	RESERVED
4	NVMSCRC[7]	NVMSCRC[6]	NVMSCRC[5]	NVMSCRC[4]	NVMSCRC[3]	NVMSCRC[2]	NVMSCRC[1]	NVMSCRC[0]
5	NVMCNT[7]	NVMCNT[6]	NVMCNT[5]	NVMCNT[4]	NVMCNT[3]	NVMCNT[2]	NVMCNT[1]	NVMCNT[0]
6	1	RESERVED	RESERVED	RESERVED	RESERVED	1	RESERVED	RESERVED
7	RESERVED	RESERVED	1	RESERVED	RESERVED	RESERVED	RESERVED	1
8	RESERVED	RESERVED	RESERVED	RESERVED	RESERVED	RESERVED	RESERVED	RESERVED
9	TARGETADR[7]	TARGETADR[6]	TARGETADR[5]	TARGETADR[4]	TARGETADR[3]	RESERVED	RESERVED	RESERVED
10	EEREV[7]	EEREV[6]	EEREV[5]	EEREV[4]	EEREV[3]	EEREV[2]	EEREV[1]	EEREV[0]
11	RESERVED	PLL_PDN	RESERVED	RESERVED	RESERVED	RESERVED	AUTOSTRT	RESERVED
14	RESERVED	RESERVED	RESERVED	RESERVED	RESERVED	1	RESERVED	1
15	RESERVED	XO_CAPCTRL[1]	XO_CAPCTRL[0]	XO_CAPCTRL[9]	XO_CAPCTRL[8]	XO_CAPCTRL[7]	XO_CAPCTRL[6]	XO_CAPCTRL[5]
16	XO_CAPCTRL[4]	XO_CAPCTRL[3]	XO_CAPCTRL[2]	RESERVED	RESERVED	RESERVED	RESERVED	RESERVED
19	RESERVED	RESERVED	RESERVED	RESERVED	RESERVED	RESERVED	RESERVED	RESERVED
20	RESERVED	RESERVED	RESERVED	RESERVED	RESERVED	RESERVED	RESERVED	RESERVED
21	RESERVED	RESERVED	RESERVED	RESERVED	RESERVED	RESERVED	RESERVED	PLL_RDIV
22	PLL_NDIV[11]	PLL_NDIV[10]	PLL_NDIV[9]	PLL_NDIV[8]	PLL_NDIV[7]	PLL_NDIV[6]	PLL_NDIV[5]	PLL_NDIV[4]
23	PLL_NDIV[3]	PLL_NDIV[2]	PLL_NDIV[1]	PLL_NDIV[0]	PLL_NUM[21]	PLL_NUM[20]	PLL_NUM[19]	PLL_NUM[18]
24	PLL_NUM[17]	PLL_NUM[16]	PLL_NUM[15]	PLL_NUM[14]	PLL_NUM[13]	PLL_NUM[12]	PLL_NUM[11]	PLL_NUM[10]
25	PLL_NUM[9]	PLL_NUM[8]	PLL_NUM[7]	PLL_NUM[6]	PLL_NUM[5]	PLL_NUM[4]	PLL_NUM[3]	PLL_NUM[2]
26	PLL_NUM[1]	PLL_NUM[0]	PLL_DEN[21]	PLL_DEN[20]	PLL_DEN[19]	PLL_DEN[18]	PLL_DEN[17]	PLL_DEN[16]
27	PLL_DEN[15]	PLL_DEN[14]	PLL_DEN[13]	PLL_DEN[12]	PLL_DEN[11]	PLL_DEN[10]	PLL_DEN[9]	PLL_DEN[8]
28	PLL_DEN[7]	PLL_DEN[6]	PLL_DEN[5]	PLL_DEN[4]	PLL_DEN[3]	PLL_DEN[2]	PLL_DEN[1]	PLL_DEN[0]
29	PLL_ DTHRMODE[1]	PLL_DTHRMODE[0]	PLL_ORDER[1]	PLL_ORDER[0]	RESERVED	RESERVED	PLL_D	PLL_CP[3]
30	PLL_CP[2]	PLL_CP[1]	PLL_CP[0]	PLL_CP_PHASE_ SHIFT[2]	PLL_CP_PHASE_ SHIFT[1]	PLL_CP_PHASE_ SHIFT[0]	PLL_ENABLE_ C3[2]	PLL_ENABLE_ C3[1]

Copyright © 2023 Texas Instruments Incorporated

Table 8-1. EEPROM Map (continued)

BYTE NO.	BIT7	BIT6	BIT5	BIT4	BIT3	BIT2	BIT1	BIT0
31	PLL_ENABLE_C3[0]	PLL_LF_R2[7]	PLL_LF_R2[6]	PLL_LF_R2[5]	PLL_LF_R2[4]	PLL_LF_R2[3]	PLL_LF_R2[2]	PLL_LF_R2[1]
32	PLL_LF_R2[0]	PLL_LF_C1[2]	PLL_LF_C1[1]	PLL_LF_C1[0]	PLL_LF_R3[6]	PLL_LF_R3[5]	PLL_LF_R3[4]	PLL_LF_R3[3]
33	PLL_LF_R3[2]	PLL_LF_R3[1]	PLL_LF_R3[0]	PLL_LF_C3[2]	PLL_LF_C3[1]	PLL_LF_C3[0]	RESERVED	RESERVED
34	PRE_DIV	OUT_DIV[8]	OUT_DIV[7]	OUT_DIV[6]	OUT_DIV[5]	OUT_DIV[4]	OUT_DIV[3]	OUT_DIV[2]
35	OUT_DIV[1]	OUT_DIV[0]	RESERVED	RESERVED	RESERVED	RESERVED	RESERVED	RESERVED

The default/reset values for each register is specified for LMK61E07.

Table 8-2. Register Map

NAME	ADDR	RESET	BIT7	BIT6	BIT5	BIT4	BIT3	BIT2	BIT1	BIT0
VNDRID_BY1	0	0x10	VNDRID[15:8]							
VNDRID_BY0	1	0x0B	VNDRID[7:0]							
PRODID	2	0x33	PRODID[7:0]							
REVID	3	0x00	REVID[7:0]							
TARGETADR	8	0xB0	TARGETADR[7:1]							RESERVED
EEREV	9	0x00	EEREV[7:0]							
DEV_CTL	10	0x01	RESERVED	PLL_PDN	RESERVED				ENCAL	AUTOSTRT
XO_CAPCTRL_BY1	16	0x00	RESERVED						XO_CAPCTRL[1:0]	
XO_CAPCTRL_BY0	17	0x00	XO_CAPCTRL[9:2]							
DIFFCTL	21	0x01	DIFF_OUT_PD	RESERVED					OUT_SEL[1:0]	
OUTDIV_BY1	22	0x00	RESERVED							OUT_DIV[8]
OUTDIV_BY0	23	0x46	OUT_DIV[7:0]							
RDIVCMOSCTL	24	0x00	RESERVED							PLL_RDIV
PLL_NDIV_BY1	25	0x00	RESERVED				PLL_NDIV[11:8]			
PLL_NDIV_BY0	26	0x31	PLL_NDIV[7:0]							
PLL_FRACNUM_BY2	27	0x00	RESERVED		PLL_NUM[21:16]					
PLL_FRACNUM_BY1	28	0x01	PLL_NUM[15:8]							
PLL_FRACNUM_BY0	29	0x1F	PLL_NUM[7:0]							

Copyright © 2023 Texas Instruments Incorporated

Table 8-2. Register Map (continued)

NAME	ADDR	RESET	BIT7	BIT6	BIT5	BIT4	BIT3	BIT2	BIT1	BIT0
PLL_FRACDEN_BY2	30	0x00	RESERVED		PLL_DEN[21:16]					
PLL_FRACDEN_BY1	31	0x02	PLL_DEN[15:8]							
PLL_FRACDEN_BY0	32	0x71	PLL_DEN[7:0]							
PLL_MASHCTRL	33	0x0C	RESERVED				PLL_DTHRMODE[1:0]		PLL_ORDER[1:0]	
PLL_CTRL0	34	0x28	RESERVED		PLL_D	RESERVED	PLL_CP[3:0]			
PLL_CTRL1	35	0x03	RESERVED	PLL_CP_PHASE_SHIFT[2:0]			RESERVED	PLL_ENABLE_C3[2:0]		
PLL_LF_R2	36	0x28	PLL_LF_R2[7:0]							
PLL_LF_C1	37	0x00	RESERVED					PLL_LF_C1[2:0]		
PLL_LF_R3	38	0x00	RESERVED	PLL_LF_R3[6:0]						
PLL_LF_C3	39	0x00	RESERVED					PLL_LF_C3[2:0]		
PLL_CALCTRL	42	0x09	RESERVED				PLL_CLSDWAIT[1:0]		PLL_VCOWAIT[1:0]	
NVMSCRC	47	0x00	NVMSCRC[7:0]							
NVMCNT	48	0x00	NVMCNT[7:0]							
NVMCTL	49	0x10	RESERVED	REGCOMMIT	NVMCRCERR	NVMAUTOCRC	NVMCOMMIT	NVMBUSY	NVMERASE	NVMPROG
NVMLCRC	50	0x00	NVMLCRC[7:0]							
MEMADR	51	0x00	RESERVED	MEMADR[6:0]						
NVMDAT	52	0x00	NVMDAT[7:0]							
RAMDAT	53	0x00	RAMDAT[7:0]							
NVMUNLK	56	0x00	NVMUNLK[7:0]							
INT_LIVE	66	0x00	RESERVED						LOL	CAL
SWRST	72	0x00	RESERVED						SWR2PLL	RESERVED

Copyright © 2023 Texas Instruments Incorporated

8.6.1 Register Descriptions

8.6.1.1 VNDRID_BY1 Register; R0

VNDRID_BY1 and VNDRID_BY0 registers are used to store the unique 16-bit Vendor Identification number assigned to I^{2}C vendors.

BIT NO.	FIELD	TYPE	DEFAULT	EEPROM	DESCRIPTION
[7:0]	VNDRID[15:8]	R	0x10	N	Vendor Identification Number Byte 1.

8.6.1.2 VNDRID_BY0 Register; R1

VNDRID_BY1 and VNDRID_BY0 registers are used to store the unique 16-bit Vendor Identification number assigned to I^{2}C vendors.

BIT NO.	FIELD	TYPE	DEFAULT	EEPROM	DESCRIPTION
[7:0]	VNDRID[7:0]	R	0x0B	N	Vendor Identification Number Byte 0.

8.6.1.3 PRODID Register; R2

The Product Identification Number is a unique 8-bit identification number used to identify the LMK61E0.

BIT NO.	FIELD	TYPE	DEFAULT	EEPROM	DESCRIPTION
[7:0]	PRODID[7:0]	R	0x33	N	Product Identification Number.

8.6.1.4 REVID Register; R3

The REVID register is used to identify the LMK61E07 mask revision.

BIT NO.	FIELD	TYPE	DEFAULT	EEPROM	DESCRIPTION
[7:0]	REVID[7:0]	R	0x00	N	Device Revision Number. The Device Revision Number is used to identify the LMK61E07 mask-set revision used to fabricate this device.

8.6.1.5 TARGETADR Register; R8

The TARGETADR register reflects the 7-bit I^{2}C Target Address value initialized from on-chip EEPROM.

BIT NO.	FIELD	TYPE	DEFAULT	EEPROM	DESCRIPTION
[7:1]	TARGETADR[7:1]	R	0x59	Y	I^{2}C Target Address. This field holds the 7-bit Target Address used to identify this device during I^{2}C transactions.
[0]	RESERVED	-	-	N	Reserved.

8.6.1.6 EEREV Register; R9

The EEREV register provides an EEPROM image revision record. EEPROM Image Revision is automatically retrieved from EEPROM and stored in the EEREV register after a reset or after a EEPROM commit operation.

BIT NO.	FIELD	TYPE	DEFAULT	EEPROM	DESCRIPTION
[7:0]	EEREV[7:0]	R	0x00	Y	EEPROM Image Revision ID

8.6.1.7 DEV_CTL Register; R10

The DEV_CTL register holds the control functions described in the following table.

BIT NO.	FIELD	TYPE	DEFAULT	EEPROM	DESCRIPTION
[7]	RESERVED	-	0	Y	Reserved.

Copyright © 2023 Texas Instruments Incorporated

BIT NO.	FIELD	TYPE	DEFAULT	EEPROM	DESCRIPTION
[6]	PLL_PDN	RW	0	Y	PLL Powerdown. The PLL_PDN bit determines whether PLL is automatically enabled and calibrated after a hardware reset. If the PLL_PDN bit is set to 1 during normal operation then PLL is disabled and the calibration circuit is reset. When PLL_PDN is then cleared to 0 PLL is re-enabled and the calibration sequence is automatically restarted.
					PLL_PDN / **Value**: 0 – PLL Enabled; 1 – PLL Disabled
[5]	CMOS_SEL	RW	0	Y	Set to 0 for LMK61E07 .
[4:2]	RESERVED[5:2]	RW	0	Y	Reserved.
[1]	ENCAL	RWSC	0	N	Enable Frequency Calibration. Triggers PLL/VCO calibration on the PLL on 0 –> 1 transition of ENCAL. This bit is self-clearing and set to a 0 after PLL/VCO calibration is complete. In powerup or software rest mode, AUTOSTRT takes precedence.
[0]	AUTOSTRT	RW	1	Y	Autostart. If AUTOSTRT is set to 1 the device will automatically attempt to achieve lock and enable outputs after a device reset. A device reset can be triggered by the power-on-reset or by writing to the SWR2PLL bit. If AUTOSTRT is 0 then the device will halt after the configuration phase, a subsequent write to set the AUTOSTRT bit to 1 will trigger the PLL Lock sequence.

8.6.1.8 XO_CAPCTRL_BY1 Register; R16

XO Margining Offset Value bits[9:8]

BIT NO.	FIELD	TYPE	DEFAULT	EEPROM	DESCRIPTION
[7:2]	RESERVED[5:0]	-	-	N	Reserved.
[1:0]	XO_CAPCTRL [1:0]	RW	0x0	Y	XO Offset Value bits [1:0]

8.6.1.9 XO_CAPCTRL_BY0 Register; R17

XO Margining Offset Value bits[7:0]

BIT NO.	FIELD	TYPE	DEFAULT	EEPROM	DESCRIPTION
[7:0]	XO_CAPCTRL [9:2]	RW	0x00	Y	XO Offset Value bits[9:2]

8.6.1.10 DIFFCTL Register; R21

The DIFFCTL register provides control over Output for LMK61E07.

Bit #	Field	Type	DEFAULT	EEPROM	Description
[7]	DIFF_OUT_PD	RW	0	N	Power down differential output buffer in LMK61E07 .
[6:2]	RESERVED	-	-	N	Reserved.
[1:0]	OUT_SEL[1:0]	RW	0x1	Y	Channel Output Driver Select in LMK61E07 . The OUT_SEL field controls the Channel Output Driver as shown below.
					OUT_SEL / **OUTPUT OPERATION**: 0 (0x0) – Tri-State; 1 (0x1) – LVPECL; 2 (0x2) – LVDS; 3 (0x3) – HCSL

Copyright © 2023 Texas Instruments Incorporated

8.6.1.11 OUTDIV_BY1 Register; R22

The 9-bit output integer divider value is set by the OUTDIV_BY1 and OUTDIV_BY0 registers.

BIT NO.	FIELD	TYPE	DEFAULT	EEPROM	DESCRIPTION
[7:1]	RESERVED	-	-	Y	Reserved.
[0]	OUT_DIV[8]	RW	0	Y	Channel's Output Divider Byte 1 (Bit 8). The Channel Divider, OUT_DIV, is a 9-bit divider. The valid register values range from 5-511.

OUT_DIV	DIVIDE RATIO
0-4	RESERVED
5 (0x006)	5
6 (0x007)	6
...	...
511 (0x1FF)	511

8.6.1.12 OUTDIV_BY0 Register; R23

The 9-bit output integer divider value is set by the OUTDIV_BY1 and OUTDIV_BY0 registers.

BIT NO.	FIELD	TYPE	DEFAULT	EEPROM	DESCRIPTION
[7:0]	OUT_DIV[7:0]	RW	0x46	Y	Channel's Output Divider Byte 0 (Bits 7-0).

8.6.1.13 RDIVCMOSCTL Register; R24

Sets R divider for LMK61E07.

BIT NO.	FIELD	TYPE	DEFAULT	EEPROM	DESCRIPTION
[7:1]	RESERVED	-	-	N	Reserved.
[0]	PLL_RDIV	RW	0	Y	On LMK61E07, R divider is set to divide-by-4 when set to 1 and R divider is bypassed when set to 0.

8.6.1.14 PLL_NDIV_BY1 Register; R25

The 12-bit N integer divider value for PLL is set by the PLL_NDIV_BY1 and PLL_NDIV_BY0 registers.

BIT NO.	FIELD	TYPE	DEFAULT	EEPROM	DESCRIPTION
[7:4]	RESERVED	-	-	N	Reserved.
[3:0]	PLL_NDIV[11:8]	RW	0x0	Y	PLL N Divider Byte 1. PLL Integer N Divider bits [11:8].

8.6.1.15 PLL_NDIV_BY0 Register; R26

The PLL_NDIV_BY0 register is described in the following table.

BIT NO.	FIELD	TYPE	DEFAULT	EEPROM	DESCRIPTION
[7:0]	PLL_NDIV[7:0]	RW	0x31	Y	PLL N Divider Byte 0. PLL Integer N Divider bits [7:0].

8.6.1.16 PLL_FRACNUM_BY2 Register; R27

The 22-bit Fractional Divider Numerator value for PLL is set by registers PLL_FRACNUM_BY2, PLL_FRACNUM_BY1 and PLL_FRACNUM_BY0.

BIT NO.	FIELD	TYPE	DEFAULT	EEPROM	DESCRIPTION
[7:6]	RESERVED	-	-	N	Reserved.
[5:0]	PLL_NUM[21:16]	RW	0x00	Y	PLL Fractional Divider Numerator Byte 2. Bits [21:16]

Copyright © 2023 Texas Instruments Incorporated

8.6.1.17 PLL_FRACNUM_BY1 Register; R28

The PLL_FRACNUM_BY1 register is described in the following table.

BIT NO.	FIELD	TYPE	DEFAULT	EEPROM	DESCRIPTION
[7:0]	PLL_NUM[15:8]	RW	0x01	Y	PLL Fractional Divider Numerator Byte 1. Bits [15:8].

8.6.1.18 PLL_FRACNUM_BY0 Register; R29

The PLL_FRACNUM_BY0 register is described in the following table.

BIT NO.	FIELD	TYPE	DEFAULT	EEPROM	DESCRIPTION
[7:0]	PLL_NUM[7:0]	RW	0x1F	Y	PLL Fractional Divider Numerator Byte 0. Bits [7:0]. When using DCXO mode, the fractional numerator bits in R27, R28, and R29 should be written in that order (MSB first and LSB last) to avoid intermediate frequency jumps.

8.6.1.19 PLL_FRACDEN_BY2 Register; R30

The 22-bit Fractional Divider Denominator value for PLL is set by registers PLL_FRACDEN_BY2, PLL_FRACDEN_BY1 and PLL_FRACDEN_BY0.

BIT NO.	FIELD	TYPE	DEFAULT	EEPROM	DESCRIPTION
[7:6]	RESERVED	-	-	N	Reserved.
[5:0]	PLL_DEN[21:16]	RW	0x00	Y	PLL Fractional Divider Denominator Byte 2. Bits [21:16].

8.6.1.20 PLL_FRACDEN_BY1 Register; R31

The PLL_FRACDEN_BY1 register is described in the following table.

BIT NO.	FIELD	TYPE	DEFAULT	EEPROM	DESCRIPTION
[7:0]	PLL_DEN[15:8]	RW	0x02	Y	PLL Fractional Divider Denominator Byte 1. Bits [15:8].

8.6.1.21 PLL_FRACDEN_BY0 Register; R32

The PLL_FRACDEN_BY0 register is described in the following table.

BIT NO.	FIELD	TYPE	DEFAULT	EEPROM	DESCRIPTION
[7:0]	PLL_DEN[7:0]	RW	0x71	Y	PLL Fractional Divider Denominator Byte 0. Bits [7:0].

8.6.1.22 PLL_MASHCTRL Register; R33

The PLL_MASHCTRL register provides control of the fractional divider for PLL.

BIT NO.	FIELD	TYPE	DEFAULT	EEPROM	DESCRIPTION	
[7:4]	RESERVED	-	-	N	Reserved.	
[3:2]	PLL_DTHRMODE[1:0]	RW	0x3	Y	Mash Engine dither mode control.	
					DITHERMODE	**Dither Configuration**
					0 (0x0)	Weak
					1 (0x1)	Reserved
					2 (0x2)	Reserved
					3 (0x3)	Dither Disabled

Copyright © 2023 Texas Instruments Incorporated

BIT NO.	FIELD	TYPE	DEFAULT	EEPROM	DESCRIPTION	
[1:0]	PLL_ORDER[1:0]	RW	0x0	Y	Mash Engine Order.	
					ORDER	**Order Configuration**
					0 (0x0)	Integer Mode Divider
					1 (0x1)	Reserved
					2 (0x2)	Reserved
					3 (0x3)	3rd order

8.6.1.23 PLL_CTRL0 Register; R34

The PLL_CTRL1 register provides control of PLL. The PLL_CTRL1 register fields are described in the following table.

BIT NO.	FIELD	TYPE	DEFAULT	EEPROM	DESCRIPTION	
[7:6]	RESERVED	RW	0x0	Y	Reserved.	
[5]	PLL_D	RW	1	Y	PLL R Divider Frequency Doubler Enable. If PLL_D is 1 the R Divider Frequency Doubler is enabled.	
[4]	RESERVED	-	-	N	Reserved.	
[3:0]	PLL_CP[3:0]	RW	0x8	Y	PLL Charge Pump Current. Other combinations of PLL_CP[3:0] not in table below are reserved and not supported.	
					PLL_CP[3:0]	PLL Charge Pump Current
					4 (0x4)	1.6 mA
					8 (0x8)	6.4 mA

Copyright © 2023 Texas Instruments Incorporated

8.6.1.24 PLL_CTRL1 Register; R35

The PLL_CTRL3 register provides control of PLL. The PLL_CTRL3 register fields are described in the following table.

BIT NO.	FIELD	TYPE	DEFAULT	EEPROM	DESCRIPTION	
[7]	RESERVED	-	-	N	Reserved.	
[6:4]	PLL_CP_PHASE_SHIFT[2:0]	RW	0x0	Y	Program Charge Pump Phase Shift.	
					PLL_CP_PHASE_SHIFT[2:0]	**Phase Shift**
					0 (0x0)	No delay
					1 (0x1)	1.3 ns for 100 MHz f_{PD}
					2 (0x2)	1 ns for 100 MHz f_{PD}
					3 (0x3)	0.9 ns for 100 MHz f_{PD}
					4 (0x4)	1.3 ns for 50 MHz f_{PD}
					5 (0x5)	1 ns for 50 MHz f_{PD}
					6 (0x6)	0.9 ns for 50 MHz f_{PD}
					7 (0x7)	0.7 ns for 50 MHz f_{PD}
[3]	RESERVED	-	-	N	Reserved.	
[2]	PLL_ENABLE_C3	RW	0x0	Y	Disable third order capacitor in the low pass filter.	
					PLL_ENABLE_C3	**MODE**
					0	2nd order loop filter recommended setting
					1	Enables C3, 3rd order loop filter enabled
[1:0]	RESERVED	-	0x3	Y	Reserved.	

8.6.1.25 PLL_LF_R2 Register; R36

The PLL_LF_R2 register controls the value of the PLL Loop Filter R2.

BIT NO.	FIELD	TYPE	DEFAULT	EEPROM	DESCRIPTION	
[7:0]	PLL_LF_R2[7:0]	RW	0x28	Y	PLL Loop Filter R2. NOTE: Table below lists commonly used R2 values but more selections are available.	
					PLL_LF_R2[7:0]	**R2 (Ω)**
					1 (0x01)	200
					4 (0x04)	500
					8 (0x08)	700
					32 (0x20)	1600
					48 (0x30)	2400
					64 (0x40)	3200

8.6.1.26 PLL_LF_C1 Register; R37

The PLL_LF_C1 register controls the value of the PLL Loop Filter C1.

BIT NO.	FIELD	TYPE	DEFAULT	EEPROM	DESCRIPTION
[7:3]	RESERVED	-	-	N	Reserved.
[2:0]	PLL_LF_C1[2:0]	RW	0x0	Y	PLL Loop Filter C1. The value in pF is given by 5 + 50 * PLL_LF_C1 (in decimal).

Copyright © 2023 Texas Instruments Incorporated

8.6.1.27 PLL_LF_R3 Register; R38

The PLL_LF_R3 register controls the value of the PLL Loop Filter R3.

BIT NO.	FIELD	TYPE	DEFAULT	EEPROM	DESCRIPTION	
[7]	RESERVED	-	-	N	Reserved.	
[6:0]	PLL_LF_R3[6:0]	RW	0x00	Y	PLL Loop Filter R3. NOTE: Table below lists commonly used R3 values but more selections are available.	
					PLL_LF_R3[6:0]	**R3 (Ω)**
					0 (0x00)	18
					3 (0x03)	205
					8 (0x08)	854
					9 (0x09)	1136
					12 (0x0C)	1535
					17 (0x11)	1936
					20 (0x14)	2335

8.6.1.28 PLL_LF_C3 Register; R39

The PLL_LF_C3 register controls the value of the PLL Loop Filter C3.

BIT NO.	FIELD	TYPE	DEFAULT	EEPROM	DESCRIPTION
[7:3]	RESERVED	-	-	N	Reserved.
[2:0]	PLL_LF_C3[2:0]	RW	0x0	Y	PLL Loop Filter C3. The value in pF is given by 5 * PLL_LF_C3 (in decimal).

8.6.1.29 PLL_CALCTRL Register; R42

The PLL_CALCTRL register is described in the following table.

BIT NO.	FIELD	TYPE	DEFAULT	EEPROM	DESCRIPTION	
[7:4]	RESERVED	-	-	N	Reserved.	
[3:2]	PLL_CLSDWAIT[1:0]	RW	0x2	Y	Closed Loop Wait Period. The CLSDWAIT field sets the closed loop wait period. Recommended value is 0x2.	
					CLSDWAIT	**Analog closed loop VCO stabilization time**
					0 (0x0)	150 µs
					1 (0x1)	300 µs
					2 (0x2)	500 µs
					3 (0x3)	2000 µs
[1:0]	PLL_VCOWAIT[1:0]	RW	0x1	Y	VCO Wait Period. Recommended value is 0x1.	
					VCOWAIT	**VCO stabilization time**
					0 (0x0)	20 µs
					1 (0x1)	400 µs
					2 (0x2)	4000 µs
					3 (0x3)	10000 µs

Copyright © 2023 Texas Instruments Incorporated

8.6.1.30 NVMSCRC Register; R47

The NVMSCRC register holds the Stored CRC (Cyclic Redundancy Check) byte that has been retrieved from on-chip EEPROM.

BIT NO.	FIELD	TYPE	DEFAULT	EEPROM	DESCRIPTION
[7:0]	NVMSCRC[7:0]	R	0x00	Y	EEPROM Stored CRC.

8.6.1.31 NVMCNT Register; R48

The NVMCNT register is intended to reflect the number of on-chip EEPROM Erase/Program cycles that have taken place in EEPROM. The count is automatically incremented by hardware and stored in EEPROM.

BIT NO.	FIELD	TYPE	DEFAULT	EEPROM	DESCRIPTION
[7:0]	NVMCNT[7:0]	R	0x00	Y	EEPROM Program Count. The NVMCNT increments automatically after every EEPROM Erase/Program Cycle. The NVMCNT value is retrieved automatically after reset, after a EEPROM Commit operation or after a Erase/Program cycle. The NVMCNT register will increment until it reaches its maximum value of 255 after which no further increments will take place.

8.6.1.32 NVMCTL Register; R49

The NVMCTL register allows control of the on-chip EEPROM Memories.

BIT NO.	FIELD	TYPE	DEFAULT	EEPROM	DESCRIPTION
[7]	RESERVED	-	-	N	Reserved.
[6]	REGCOMMIT	RWSC	0	N	REG Commit to EEPROM SRAM Array. The REGCOMMIT bit is used to initiate a transfer from the on-chip registers back to the corresponding location in the EEPROM SRAM Array. The REGCOMMIT bit is automatically cleared to 0 when the transfer is complete.
[5]	NVMCRCERR	R	0	N	EEPROM CRC Error Indication. The NVMCRCERR bit is set to 1 if a CRC Error has been detected when reading back from on-chip EEPROM during device configuration.
[4]	NVMAUTOCRC	RW	1	N	EEPROM Automatic CRC. When NVMAUTOCRC is 1 then the EEPROM Stored CRC byte is automatically calculated whenever a EEPROM program takes place.
[3]	NVMCOMMIT	RWSC	0	N	EEPROM Commit to Registers. The NVMCOMMIT bit is used to initiate a transfer of the on-chip EEPROM contents to internal registers. The transfer happens automatically after reset or when NVMCOMMIT is set to 1. The NVMCOMMIT bit is automatically cleared to 0. The I^2C registers cannot be read while a EEPROM Commit operation is taking place.
[2]	NVMBUSY	R	0	N	EEPROM Program Busy Indication. The NVMBUSY bit is 1 during an on-chip EEPROM Erase/Program cycle. While NVMBUSY is 1 the on-chip EEPROM cannot be accessed.
[1]	NVMERASE	RWSC	0	N	EEPROM Erase Start. The NVMERASE bit is used to begin an on-chip EEPROM Erase cycle. The Erase cycle is only initiated if the immediately preceding I^2C transaction was a write to the NVMUNLK register with the appropriate code. The NVMERASE bit is automatically cleared to 0. The EEPROM Erase operation takes around 115ms.

Copyright © 2023 Texas Instruments Incorporated

BIT NO.	FIELD	TYPE	DEFAULT	EEPROM	DESCRIPTION
[0]	NVMPROG	RWSC	0	N	`EEPROM Program Start.` The NVMPROG bit is used to begin an on-chip EEPROM Program cycle. The Program cycle is only initiated if the immediately preceding I^2C transaction was a write to the NVMUNLK register with the appropriate code. The NVMPROG bit is automatically cleared to 0. If the NVMERASE and NVMPROG bits are set simultaneously then an ERASE/PROGRAM cycle will be executed The EEPROM Program operation takes around 115ms.

8.6.1.33 NVMLCRC Register; R50

The NVMLCRC register holds the Live CRC (Cyclic Redundancy Check) byte.

BIT NO.	FIELD	TYPE	DEFAULT	EEPROM	DESCRIPTION
[7:0]	NVMLCRC[7:0]	R	0x00	N	`EEPROM Live CRC.`

8.6.1.34 MEMADR Register; R51

The MEMADR register holds 7-bits of the starting address for on-chip SRAM or EEPROM access.

BIT NO.	FIELD	TYPE	DEFAULT	EEPROM	DESCRIPTION
[7]	RESERVED	-	-	N	`Reserved.`
[6:0]	MEMADR[6:0]	RW	0x00	N	`Memory Address.` The MEMADR value determines the starting address for on-chip SRAM read/write access or on-chip EEPROM access. The internal address to access SRAM or EEPROM is automatically incremented; however the MEMADR register does not reflect the internal address in this way. When the SRAM or EEPROM arrays are accessed using the I^2C interface only bits [4:0] of MEMADR are used to form the byte Wise address.

8.6.1.35 NVMDAT Register; R52

The NVMDAT register returns the on-chip EEPROM contents from the starting address specified by the MEMADR register.

BIT NO.	FIELD	TYPE	DEFAULT	EEPROM	DESCRIPTION
[7:0]	NVMDAT[7:0]	R	0x00	N	`EEPROM Read Data.` The first time an I^2C read transaction accesses the NVMDAT register address, either because it was explicitly targeted or because the address was auto-incremented, the read transaction will return the EEPROM data located at the address specified by the MEMADR register. Any additional reads which are part of the same transaction will cause the EEPROM address to be incremented and the next EEPROM data byte will be returned. The I^2C address will no longer be auto-incremented, that is the I^2C address will be locked to the NVMDAT register after the first access. Access to the NVMDAT register will terminate at the end of the current I^2C transaction.

8.6.1.36 RAMDAT Register; R53

The RAMDAT register provides read and write access to the SRAM that forms part of the on-chip EEPROM module.

Copyright © 2023 Texas Instruments Incorporated

BIT NO.	FIELD	TYPE	DEFAULT	EEPROM	DESCRIPTION
[7:0]	RAMDAT[7:0]	RW	0x00	N	`RAM Read/Write Data.` The first time an I^2C read or write transaction accesses the RAMDAT register address, either because it was explicitly targeted or because the address was auto-incremented, a read transaction will return the RAM data located at the address specified by the MEMADR register and a write transaction will cause the current I^2C data to be written to the address specified by the MEMADR register. Any additional accesses which are part of the same transaction will cause the RAM address to be incremented and a read or write access will take place to the next SRAM address. The I^2C address will no longer be auto-incremented, that is the I^2C address will be locked to the RAMDAT register after the first access. Access to the RAMDAT register will terminate at the end of the current I^2C transaction.

8.6.1.37 NVMUNLK Register; R56

The NVMUNLK register provides a rudimentary level of protection to prevent inadvertent programming of the on-chip EEPROM.

BIT NO.	FIELD	TYPE	DEFAULT	EEPROM	DESCRIPTION
[7:0]	NVMUNLK[7:0]	RW	0x00	N	`EEPROM Prog Unlock.` The NVMUNLK register must be written immediately prior to setting the NVMPROG bit of register NVMCTL, otherwise the Erase/Program cycle will not be triggered. NVMUNLK must be written with a value of 0xBE.

Copyright © 2023 Texas Instruments Incorporated

8.6.1.38 INT_LIVE Register; R66

The INT_LIVE register reflects the current status of the interrupt sources.

BIT NO.	FIELD	TYPE	DEFAULT	EEPROM	DESCRIPTION
[7:2]	RESERVED	-	-	N	Reserved.
[1]	LOL	R	0	N	Loss of Lock PLL.
[0]	CAL	R	0	N	Calibration Active PLL.

8.6.1.39 SWRST Register; R72

The SWRST1 register provides software reset control for specific on-chip modules. Each bit in this register is individually self cleared after a write operation. The SWRST1 register will always return 0x00 in a read transaction.

BIT NO.	FIELD	TYPE	DEFAULT	EEPROM	DESCRIPTION
[7:2]	RESERVED	-	-	N	Reserved.
[1]	SWR2PLL	RWSC	0	N	Software Reset PLL. Setting SWR2PLL to 1 resets the PLL calibrator and clock dividers. This bit is automatically cleared to 0.
[0]	RESERVED	-	-	N	Reserved.

Copyright © 2023 Texas Instruments Incorporated

9 Application and Implementation

Note

Information in the following applications sections is not part of the TI component specification, and TI does not warrant its accuracy or completeness. TI's customers are responsible for determining suitability of components for their purposes, as well as validating and testing their design implementation to confirm system functionality.

9.1 Application Information

The LMK61E07 features fine and coarse frequency margining capabilities which allow it to be used in applications requiring the output frequency to be adjusted on the fly. In fractional PLL mode, the numerator of the PLL fractional feedback divider can be updated over I^2C to update the output frequency without glitches or spikes, allowing the device to be used as a DCXO. The output frequency step size for every bit change in the numerator of the PLL fractional feedback divider is given in *Configuring the PLL*. The *Application Curves* section below illustrates the glitch-less switch in output frequency when the numerator is updated. The frequency margining features can also aid the hardware designer during the system debug and validation phase.

9.2 Typical Application

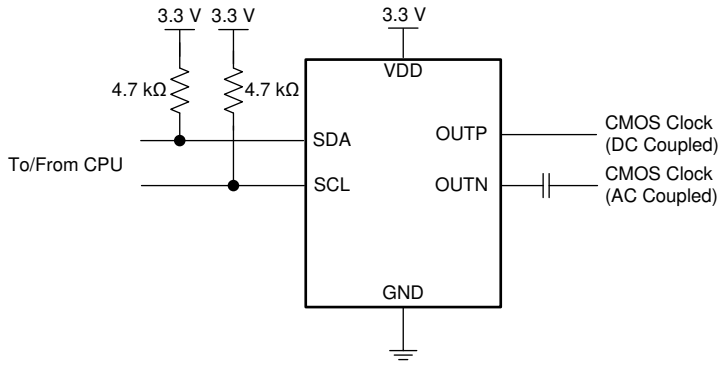

Figure 9-1. LMK61E07 Typical Application

9.2.1 Design Requirements

Consider a typical digital subscriber line (DSL) application, in which a local modem must track the clock signal of a network modem to ensure accurate and efficient data transfer. In such systems, a DCXO is implemented to allow a local processor to digitally control the oscillator frequency to maintain synchronization. An example of such a clock frequency would be 70.656 MHz.

The typical schematic above shows the I^2C connection to the processor and output configurations for LVPECL AC coupling. .

The *Detailed Design Procedure* below describes the procedure to generate and adjust the required output frequency for the above scenario using LMK61E07.

9.2.2 Detailed Design Procedure

This design procedure will give a quick outline of the process of configuring the LMK61E07 in the above use case. Typically, the easiest approach to configuring the PLL is to start with the desired output frequency and work backwards.

1. VCO Frequency Selection
   - The first step is to calculate the possible VCO frequencies given the required output frequency of 70.656 MHz. The LMK61E07 output divider that can be set from /5 to /511. The VCO can output frequencies from 4.6 GHz to 5.6 GHz. Therefore, the output frequency multiplied by the total divide value must fall within this range.

Copyright © 2023 Texas Instruments Incorporated

- To determine the boundary of the total divide value, we can divide the VCO frequency limits by the output frequency, resulting in a range of 65.1 to 79.3. Any output divider value within this range will result in a valid VCO frequency. A few possible divider combinations and the resulting VCO frequencies are listed in columns 1 and 2, respectively, of Table 9-1 below.

2. Input Divider and Doubler/Phase Detector Frequency Configuration
   - The next step is to set the reference divider and doubler in the reference frequency path to the PLL. The reference divider can be set to /1 or /4, and the doubler can be set to x1 or x2. The main trade-off is that a higher phase detector frequency will result in better output phase noise performance and a lower phase detector frequency will result in a finer output frequency step size when adjusting the feedback divider numerator in DCXO mode.
   - In the DSL application, a finer step size is desired so the reference divider will be set to /4 and the doubler to x1 to minimize the phase detector frequency. The phase detector frequency can then be calculated by multiplying and dividing the reference frequency of 50 MHz by those values, resulting in 12.5 MHz.
   - Note that in some applications, a trade-off in step size to obtain better phase noise performance is acceptable. In that case the design procedure can be continued, substituting the relevant reference divider and doubler configuration and phase detector frequency.
   -
3. Feedback Divider Selection
   - The possible feedback divider values can then be calculated by dividing the VCO frequency by the phase detector frequency. The possible values are listed in column 3 of Table 9-1.
   - Glitch-less frequency margining in DCXO mode is achieved by adjusting the numerator of the feedback divider without changing the integer value of the divider, which could cause a frequency glitch. Therefore, the output frequency tuning range is limited by which VCO frequency and feedback divider we select out of the valid combinations. To obtain as equal of a tuning range above and below the nominal output frequency as possible, a feedback divider value with fractional portion as close to 1/2 as possible should be chosen.
   - The VCO frequency of 5369.856 MHz results in a feedback divider of 429.58848, which has a fractional portion closest to 1/2. The decimal converted to a fraction is 429+58848/100000. To minimize step size, the fraction can be converted to the maximum equivalent fraction of 2412768/4100000 as limited by the maximum denominator of 4194303.
4. Frequency Margining
   - With the device configured to output the nominal frequency of 70.656 MHz, the numerator can be adjusted over I^2C to tune the output frequency.
   - Using equation 3 in *Configuring the PLL*, the step size of this configuration can be calculated to be approximately $4x10^{-8}$ MHz or 0.58 ppb.
   - The maximum and minimum tuning range limits can be determined by calculating the maximum shift in frequency from nominal without changing the integer portion of the feedback divider (including setting the numerator to zero or equal to the denominator). In this case, the limits are a maximum of +955 ppm and a minimum of –1365 ppm from nominal.

Table 9-1. PLL Configuration Options

1. EXAMPLE OUTPUT DIVIDER VALUES	2. POSSIBLE VCO FREQUENCIES (MHz)	3. FEEDBACK DIVIDER WITH PDF=12.5 MHz	4. EQUIVALENT FRACTIONAL FEEDBACK DIVIDER VALUES
68	4804.608	384.36864	384+1511424/4100000
70	4945.92	395.6736	395+2822384/4190000
72	5087.232	406.97856	406+4012096/4100000
75	5299.2	423.936	423+3925584/4194000
76	5369.856	429.58848	429+2412768/4100000

9.2.2.1 PLL Loop Filter Design

The EVM software tool TICS Pro/Oscillator Programming Tool can be used to aid loop filter design. The Easy Configuration GUI is able to generate a suggested set of loop filter values given a desired output frequency. The tool recommends a PLL configuration that is designed to minimize jitter. As of the publication of this document,

Copyright © 2023 Texas Instruments Incorporated

it is not yet able to optimize for desired tuning range in DCXO mode. When configuring the device for operation in DCXO mode, TI recommends using the software suggested loop filter settings as a starting point and then perform the procedure described in *Detailed Design Procedure* to optimize the PLL configuration to suit the application needs.

A general set of loop filter design guidelines are given below:

- There are many device configurations to achieve the desired output frequency from a device. However there are some optimizations and trade-offs to be considered.
- The guidelines below may be followed when configuring PLL related dividers or other related registers:
  - For lowest possible in-band PLL flat noise, maximize phase detector frequency to minimize N divide value.
  - For fractional divider values, keep the denominator at highest value possible to minimize spurs. It is also best to use a higher order modulator whenever possible for the same reason.
  - As a rule of thumb, keep the phase detector frequency approximately between 10 × PLL loop bandwidth and 100 × PLL loop bandwidth. A phase detector frequency less than 5 × PLL bandwidth may be unstable.
  - While designing the loop filter, adjusting the charge pump current or N value can help with loop filter component selection. Lower charge pump currents and larger N values result in smaller component values but may increase impacts of leakage and reduce PLL phase noise performance.

9.2.2.2 Spur Mitigation Techniques

The LMK61E07 offers several programmable features for optimizing fractional spurs. To get the best out of these features, it makes sense to understand the different kinds of spurs as well as their behaviors, causes, and remedies. Although optimizing spurs may involve some trial and error, there are ways to make this process more systematic. TI offers the *Clock Design Tool* (SNAU082) for more information and estimation of fractional spurs.

9.2.2.2.1 Phase Detection Spur

The phase detector spur occurs at an offset from the carrier equal to the phase detector frequency, f_{PD}. To minimize this spur, consider a lower phase detector frequency. In some cases where the loop bandwidth is very wide relative to the phase detector frequency, some benefit might be gained from using a narrower loop bandwidth or adding poles to the loop filter by using R3 and C3 if previously unused, but otherwise the loop filter has minimal impact. Bypassing at the supply pins and board layout can also have an impact on this spur, especially at higher phase detector frequencies.

9.2.2.2.2 Integer Boundary Fractional Spur

This spur occurs at an offset equal to the difference between the VCO frequency and the closest integer channel for the VCO. For instance, if the phase detector frequency is 100 MHz and the VCO frequency is 5003 MHz, then the integer boundary spur would be at 3-MHz offset. This spur can be either PLL or VCO dominated. If it is PLL dominated, decreasing the loop bandwidth and some of the programmable fractional words may impact this spur. If the spur is VCO dominated, then reducing the loop filter will not help, but rather reducing the phase detector and having good slew rate and signal integrity at the selected reference input will help.

9.2.2.2.3 Primary Fractional Spur

These spurs occur at multiples of f_{PD}/DEN and are not the integer boundary spur. For instance, if the phase detector frequency is 100 MHz and the fraction is 3/100, the primary fractional spurs would be at 1 MHz, 2 MHz, 4 MHz, 5 MHz, 6 MHz, and so forth. These are impacted by the loop filter bandwidth and modulator order. If a small frequency error is acceptable, then a larger equivalent fraction may improve these spurs. This larger unequivalent fraction pushes the fractional spur energy to much lower frequencies that where they are not impactful to the system performance.

9.2.2.2.4 Sub-Fractional Spur

These spurs appear at a fraction of f_{PD}/DEN and depend on modulator order. With the first order modulator, there are no sub-fractional spurs. The second order modulator can produce 1/2 sub-fractional spurs if the denominator is even. A third order modulator can produce sub-fractional spurs at 1/2, 1/3, or 1/6 of the offset, depending if it is divisible by 2 or 3. For instance, if the phase detector frequency is 100 MHz and the fraction is 3/100, no sub-fractional spurs for a first order modulator or sub-fractional spurs at multiples of 1.5 MHz for a

Copyright © 2023 Texas Instruments Incorporated

second or third order modulator would be expected. Aside from strategically choosing the fractional denominator and using a lower order modulator, another tactic to eliminate these spurs is to use dithering and express the fraction in larger equivalent terms. Because dithering also adds phase noise, its level needs to be managed to achieve acceptable phase noise and spurious performance.

Table 9-2 summarizes spur and mitigation techniques.

Table 9-2. Spur and Mitigation Techniques

SPUR TYPE	OFFSET	WAYS TO REDUCE	TRADE-OFFS
Phase Detector	f_{PD}	Reduce Phase Detector Frequency.	Although reducing the phase detector frequency does improve this spur, it also degrades phase noise.
Integer Boundary	f_{VCO} mod f_{PD}	**Methods for PLL Dominated Spurs**	Reducing the loop bandwidth may degrade the total integrated noise if the bandwidth is too narrow.
		- Avoid the worst case VCO frequencies if possible.	
		- Ensure good slew rate and signal integrity at reference input.	
		- Reduce loop bandwidth or add more filter poles to suppress out of band spurs.	
		Methods for VCO Dominated Spurs	Reducing the phase detector may degrade the phase noise.
		- Avoid the worst case VCO frequencies if possible.	
		- Reduce Phase Detector Frequency.	
		- Ensure good slew rate and signal integrity at reference input.	
Primary Fractional	f_{PD}/DEN	- Decrease Loop Bandwidth.	Decreasing the loop bandwidth may degrade in-band phase noise. Also, larger unequivalent fractions don't always reduce spurs.
		- Change Modulator Order.	
		- Use Larger Unequivalent Fractions.	
Sub-Fractional	f_{PD}/DEN/k k=2,3, or 6	- Use Dithering.	Dithering and larger fractions may increase phase noise.
		- Use Larger Equivalent Fractions.	
		- Use Larger Unequivalent Fractions.	
		- Reduce Modulator Order.	
		- Eliminate factors of 2 or 3 in denominator.	

9.2.2.3 Device Programming

The EVM software tool TICS Pro/Oscillator Programming Tool can be used to program the device with the desired configuration. Simply select the *Program EEPROM* option and the software will automatically load the current configuration to EEPROM. The settings will then be available upon subsequent startup without the need to reload the registers over I^2C.

Copyright © 2023 Texas Instruments Incorporated

9.2.3 Application Curves

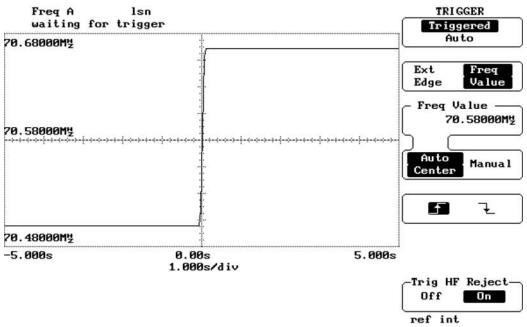

Figure 9-2. Increasing Output Frequency in DCXO Mode

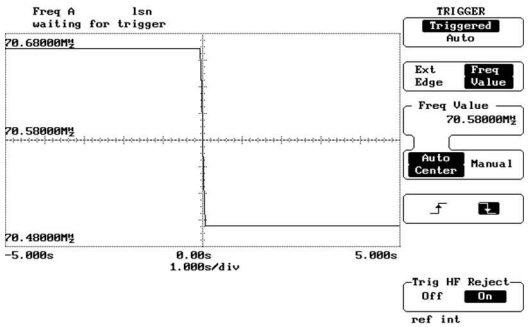

Figure 9-3. Decreasing Output Frequency in DCXO Mode

9.3 Power Supply Recommendations

For best electrical performance of the LMK61E07 device, TI recommends using a combination of 10 µF, 1 µF, and 0.1 µF on its power supply bypass network. TI also recommends using component side mounting of the power supply bypass capacitors, and it is best to use 0201 or 0402 body size capacitors to facilitate signal routing. Keep the connections between the bypass capacitors and the power supply on the device as short as possible. Ground the other side of the capacitor using a low impedance connection to the ground plane. Figure 9-4 shows the layout recommendation for power supply decoupling of LMK61E07.

9.4 Layout

9.4.1 Layout Guidelines

Ensured Thermal Reliability, *Best Practices for Signal Integrity* and *Recommended Solder Reflow Profile* provide recommendations for board layout, solder reflow profile and power supply bypassing when using LMK61E07 to ensure good thermal and electrical performance and overall signal integrity of entire system.

9.4.1.1 Ensured Thermal Reliability

The LMK61E07 is a high performance device. Therefore pay careful attention to device configuration and printed-circuit board (PCB) layout with respect to power consumption. The ground pin needs to be connected to the ground plane of the PCB through three vias or more, as shown in Figure 9-4, to maximize thermal dissipation out of the package.

Equation 4 describes the relationship between the PCB temperature around the LMK61E07 and its junction temperature.

$$T_B = T_J - \Psi_{JB} * P \quad (4)$$

where

- T_B: PCB temperature around the LMK61E07
- T_J: Junction temperature of LMK61E07
- Ψ_{JB}: Junction-to-board thermal resistance parameter of LMK61E07 (36.7°C/W without airflow)
- P: On-chip power dissipation of LMK61E07

To ensure that the maximum junction temperature of LMK61E07 is below 115°C, it can be calculated that the maximum PCB temperature without airflow should be at 90°C or below when the device is optimized for best performance resulting in maximum on-chip power dissipation of 0.69 W.

9.4.1.2 Best Practices for Signal Integrity

For best electrical performance and signal integrity of entire system with LMK61E07, TI recommends routing vias into decoupling capacitors and then into the LMK61E07. TI also recommends increasing the via count

Copyright © 2023 Texas Instruments Incorporated

and width of the traces wherever possible. These steps ensure lowest impedance and shortest path for high-frequency current flow. Figure 9-4 shows the layout recommendation for LMK61E07.

9.4.1.3 Recommended Solder Reflow Profile

TI also recommends following the solder paste supplier's recommendations to optimize flux activity and to achieve proper melting temperatures of the alloy within the guidelines of J-STD-20. It is preferable for the LMK61E07 to be processed with the lowest peak temperature possible while also remaining below the components peak temperature rating as listed on the MSL label. The exact temperature profile would depend on several factors including maximum peak temperature for the component as rated on the MSL label, Board thickness, PCB material type, PCB geometries, component locations, sizes, densities within PCB, as well solder manufactures recommended profile, and capability of the reflow equipment to as confirmed by the SMT assembly operation.

9.4.2 Layout Example

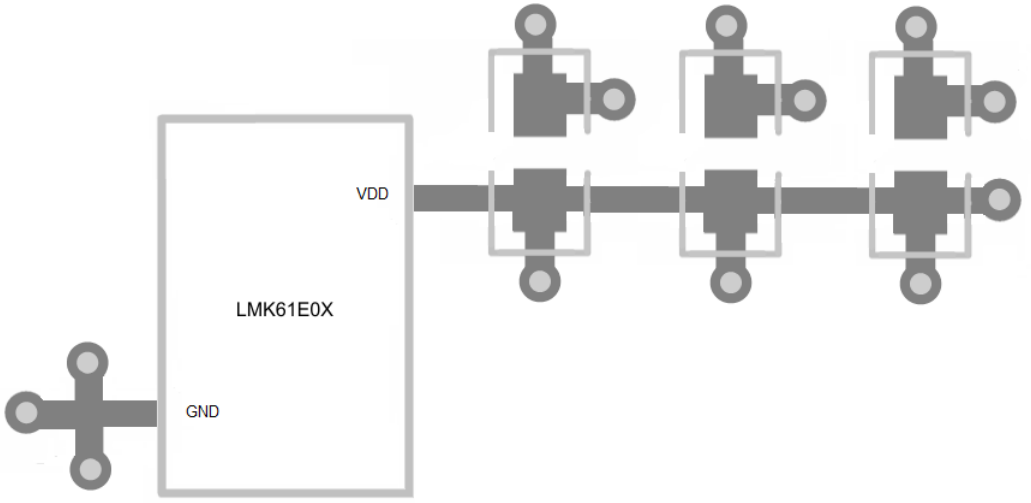

Figure 9-4. LMK61E07 Layout Recommendation for Power Supply and Ground

10 Device and Documentation Support

10.1 Documentation Support

10.1.1 Related Documentation

For related documentation see the following:

-
- *Clock Design Tool* (SNAU082)
- *PLL Performance, Simulation, and Design*

10.2 Receiving Notification of Documentation Updates

To receive notification of documentation updates, navigate to the device product folder on ti.com. Click on *Subscribe to updates* to register and receive a weekly digest of any product information that has changed. For change details, review the revision history included in any revised document.

10.3 Support Resources

TI E2E™ support forums are an engineer's go-to source for fast, verified answers and design help — straight from the experts. Search existing answers or ask your own question to get the quick design help you need.

Linked content is provided "AS IS" by the respective contributors. They do not constitute TI specifications and do not necessarily reflect TI's views; see TI's Terms of Use.

10.4 Trademarks

PLLatinum™ and TI E2E™ are trademarks of Texas Instruments.
All trademarks are the property of their respective owners.

10.5 Electrostatic Discharge Caution



This integrated circuit can be damaged by ESD. Texas Instruments recommends that all integrated circuits be handled with appropriate precautions. Failure to observe proper handling and installation procedures can cause damage.

ESD damage can range from subtle performance degradation to complete device failure. Precision integrated circuits may be more susceptible to damage because very small parametric changes could cause the device not to meet its published specifications.

10.6 Glossary

TI Glossary	This glossary lists and explains terms, acronyms, and definitions.

11 Mechanical, Packaging, and Orderable Information

The following pages include mechanical, packaging, and orderable information. This information is the most current data available for the designated devices. This data is subject to change without notice and revision of this document. For browser-based versions of this data sheet, refer to the left-hand navigation.

Copyright © 2023 Texas Instruments Incorporated

PACKAGING INFORMATION

Orderable part number	Status (1)	Material type (2)	Package | Pins	Package qty | Carrier	RoHS (3)	Lead finish/ Ball material (4)	MSL rating/ Peak reflow (5)	Op temp (°C)	Part marking (6)
LMK61E07-SIAR	Active	Production	QFM (SIA) | 6	2500 | LARGE T&R	In-Work	NIAU	Level-3-260C-168 HR	-40 to 85	LMK61E07
LMK61E07-SIAR.A	Active	Production	QFM (SIA) | 6	2500 | LARGE T&R	In-Work	NIAU	Level-3-260C-168 HR	-40 to 85	LMK61E07
LMK61E07-SIAT	Active	Production	QFM (SIA) | 6	250 | SMALL T&R	In-Work	NIAU	Level-3-260C-168 HR	-40 to 85	LMK61E07
LMK61E07-SIAT.A	Active	Production	QFM (SIA) | 6	250 | SMALL T&R	In-Work	NIAU	Level-3-260C-168 HR	-40 to 85	LMK61E07

(1) **Status:** For more details on status, see our product life cycle.

(2) **Material type:** When designated, preproduction parts are prototypes/experimental devices, and are not yet approved or released for full production. Testing and final process, including without limitation quality assurance, reliability performance testing, and/or process qualification, may not yet be complete, and this item is subject to further changes or possible discontinuation. If available for ordering, purchases will be subject to an additional waiver at checkout, and are intended for early internal evaluation purposes only. These items are sold without warranties of any kind.

(3) **RoHS values:** Yes, No, RoHS Exempt. See the TI RoHS Statement for additional information and value definition.

(4) **Lead finish/Ball material:** Parts may have multiple material finish options. Finish options are separated by a vertical ruled line. Lead finish/Ball material values may wrap to two lines if the finish value exceeds the maximum column width.

(5) **MSL rating/Peak reflow:** The moisture sensitivity level ratings and peak solder (reflow) temperatures. In the event that a part has multiple moisture sensitivity ratings, only the lowest level per JEDEC standards is shown. Refer to the shipping label for the actual reflow temperature that will be used to mount the part to the printed circuit board.

(6) **Part marking:** There may be an additional marking, which relates to the logo, the lot trace code information, or the environmental category of the part.

Multiple part markings will be inside parentheses. Only one part marking contained in parentheses and separated by a "~" will appear on a part. If a line is indented then it is a continuation of the previous line and the two combined represent the entire part marking for that device.

Important Information and Disclaimer: The information provided on this page represents TI's knowledge and belief as of the date that it is provided. TI bases its knowledge and belief on information provided by third parties, and makes no representation or warranty as to the accuracy of such information. Efforts are underway to better integrate information from third parties. TI has taken and continues to take reasonable steps to provide representative and accurate information but may not have conducted destructive testing or chemical analysis on incoming materials and chemicals. TI and TI suppliers consider certain information to be proprietary, and thus CAS numbers and other limited information may not be available for release.

In no event shall TI's liability arising out of such information exceed the total purchase price of the TI part(s) at issue in this document sold by TI to Customer on an annual basis.

TAPE AND REEL INFORMATION

REEL DIMENSIONS

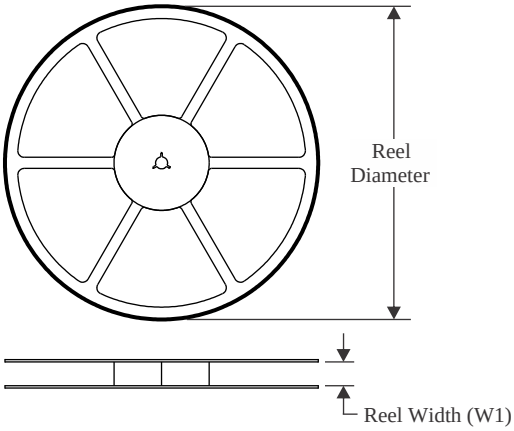

TAPE DIMENSIONS

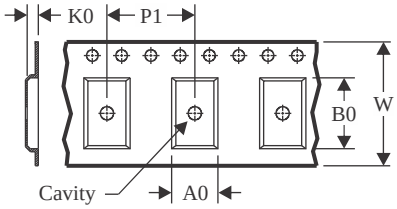

A0	Dimension designed to accommodate the component width
B0	Dimension designed to accommodate the component length
K0	Dimension designed to accommodate the component thickness
W	Overall width of the carrier tape
P1	Pitch between successive cavity centers

QUADRANT ASSIGNMENTS FOR PIN 1 ORIENTATION IN TAPE

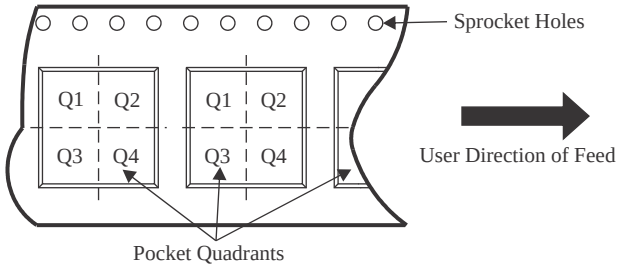

*All dimensions are nominal

Device	Package Type	Package Drawing	Pins	SPQ	Reel Diameter (mm)	Reel Width W1 (mm)	A0 (mm)	B0 (mm)	K0 (mm)	P1 (mm)	W (mm)	Pin1 Quadrant
LMK61E07-SIAR	QFM	SIA	6	2500	330.0	16.4	5.5	7.5	1.5	8.0	16.0	Q1
LMK61E07-SIAT	QFM	SIA	6	250	178.0	16.4	5.5	7.5	1.5	8.0	16.0	Q1

TAPE AND REEL BOX DIMENSIONS

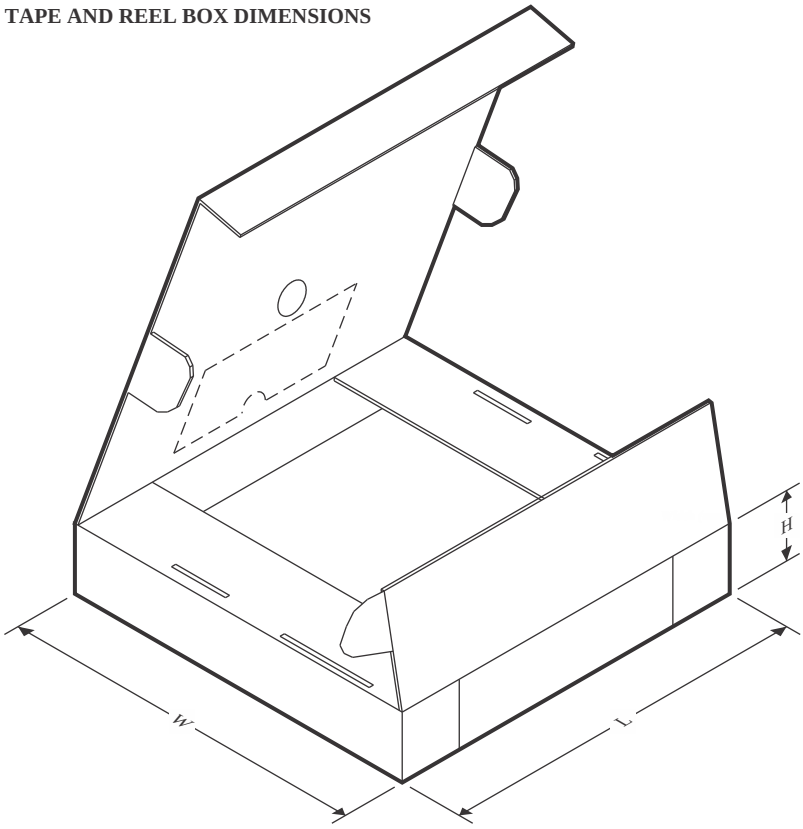

*All dimensions are nominal

Device	Package Type	Package Drawing	Pins	SPQ	Length (mm)	Width (mm)	Height (mm)
LMK61E07-SIAR	QFM	SIA	6	2500	356.0	356.0	36.0
LMK61E07-SIAT	QFM	SIA	6	250	208.0	191.0	35.0

SIA 6

QFM

QUAD FLAT MODULE

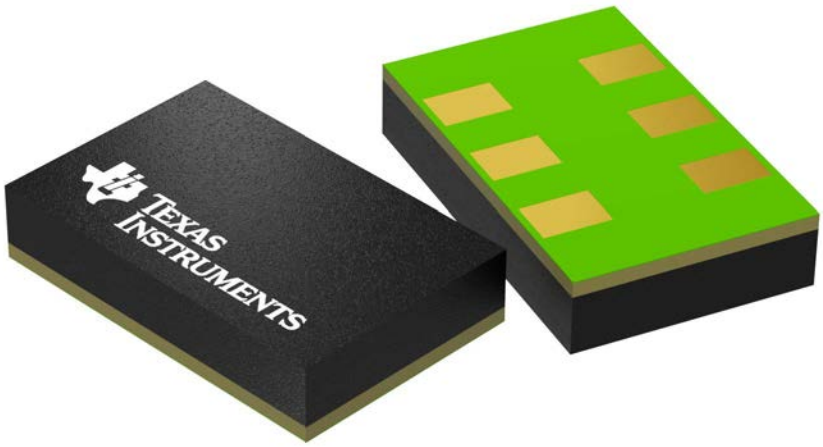

Images above are just a representation of the package family, actual package may vary.
Refer to the product data sheet for package details.

IMPORTANT NOTICE AND DISCLAIMER

TI PROVIDES TECHNICAL AND RELIABILITY DATA (INCLUDING DATASHEETS), DESIGN RESOURCES (INCLUDING REFERENCE DESIGNS), APPLICATION OR OTHER DESIGN ADVICE, WEB TOOLS, SAFETY INFORMATION, AND OTHER RESOURCES “AS IS” AND WITH ALL FAULTS, AND DISCLAIMS ALL WARRANTIES, EXPRESS AND IMPLIED, INCLUDING WITHOUT LIMITATION ANY IMPLIED WARRANTIES OF MERCHANTABILITY, FITNESS FOR A PARTICULAR PURPOSE OR NON-INFRINGEMENT OF THIRD PARTY INTELLECTUAL PROPERTY RIGHTS.

These resources are intended for skilled developers designing with TI products. You are solely responsible for (1) selecting the appropriate TI products for your application, (2) designing, validating and testing your application, and (3) ensuring your application meets applicable standards, and any other safety, security, regulatory or other requirements.

These resources are subject to change without notice. TI grants you permission to use these resources only for development of an application that uses the TI products described in the resource. Other reproduction and display of these resources is prohibited. No license is granted to any other TI intellectual property right or to any third party intellectual property right. TI disclaims responsibility for, and you fully indemnify TI and its representatives against any claims, damages, costs, losses, and liabilities arising out of your use of these resources.

TI’s products are provided subject to TI’s Terms of Sale, TI’s General Quality Guidelines, or other applicable terms available either on ti.com or provided in conjunction with such TI products. TI’s provision of these resources does not expand or otherwise alter TI’s applicable warranties or warranty disclaimers for TI products. Unless TI explicitly designates a product as custom or customer-specified, TI products are standard, catalog, general purpose devices.

TI objects to and rejects any additional or different terms you may propose.

Copyright © 2026, Texas Instruments Incorporated

Last updated 10/2025