LMV3xx Low-Voltage Rail-to-Rail Output Operational Amplifier

1 Features

- For an upgraded version - refer to LMV321A, LMV358A, and LMV324A
- 2.7-V and 5-V performance
- –40°C to +125°C operation
- No crossover distortion
- Low supply current
  - LMV321: 130 µA (typical)
  - LMV358: 210 µA (typical)
  - LMV324: 410 µA (typical)
- Rail-to-rail output swing
- ESD protection exceeds JESD 22
  - 2000-V human-body model
  - 1000-V charged-device model

2 Applications

- Desktop PCs
- HVAC: heating, ventilating, and air conditioning
- Motor control: AC induction
- Net-books
- Portable media players
- Power: telecom DC/DC module: digital
- Professional audio mixers
- Refrigerators
- Washing machines: high-end and low-end

3 Description

For an upgraded version with enhanced performance, please refer to LMV321A, LMV358A, and LMV324A.

The LMV321, LMV358, and LMV324 devices are single, dual, and quad low-voltage (2.7 V to 5.5 V) operational amplifiers with rail-to-rail output swing. These devices are the most cost-effective solutions for applications where low-voltage operation, space saving, and low cost are needed. These amplifiers are designed specifically for low-voltage (2.7 V to 5 V) operation, with performance specifications meeting or exceeding the LM358 and LM324 devices that operate from 5 V to 30 V. With package sizes down to one-half the size of the DBV (SOT-23) package, these devices can be used for a variety of applications.

Device Information

PART NUMBER	CHANNEL COUNT	PACKAGE(1)	PACKAGE SIZE(2)
LMV321	Single	DBV (SOT-23, 5)	2.90 mm × 2.80 mm
		DCK (SC-70, 5)	2.00 mm × 2.10 mm
LMV358	Dual	D (SOIC, 8)	4.90 mm × 6.00 mm
		DDU (VSSOP, 8)	2.00 mm × 3.10 mm
		DGK (VSSOP, 8)	3.00 mm × 4.90 mm
		PW (TSSOP, 8)	3.00 mm × 6.40 mm
LMV324	Quad	D (SOIC, 14)	8.65 mm × 6.00 mm
		PW (TSSOP, 14)	5.00 mm × 6.40 mm

(1) For all available packages, see the orderable addendum at the end of the data sheet.
(2) The package size (length × width) is a nominal value and includes pins, where applicable.

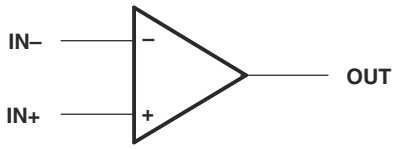

Simplified Schematic

An IMPORTANT NOTICE at the end of this data sheet addresses availability, warranty, changes, use in safety-critical applications, intellectual property matters and other important disclaimers. PRODUCTION DATA.

Table of Contents

1 Features....1
2 Applications....1
3 Description....1
4 Revision History....2
5 Pin Configuration and Functions....3
6 Specifications....5
6.1 Absolute Maximum Ratings....5
6.2 ESD Ratings....5
6.3 Recommended Operating Conditions....5
6.4 Thermal Information: LMV321....5
6.5 Thermal Information: LMV324....5
6.6 Thermal Information: LMV358....6
6.7 Electrical Characteristics: V_{CC}+ = 2.7 V....6
6.8 Electrical Characteristics: V_{CC}+ = 5 V....7
6.9 Typical Characteristics....8
7 Detailed Description....16
7.1 Overview....16
7.2 Functional Block Diagram....16
7.3 Feature Description....17
7.4 Device Functional Modes....17
8 Application and Implementation....18
8.1 Typical Application....18
8.2 Power Supply Recommendations....20
8.3 Layout....21
9 Device and Documentation Support....22
9.1 Receiving Notification of Documentation Updates....22
9.2 Support Resources....22
9.3 Trademarks....22
9.4 Electrostatic Discharge Caution....22
9.5 Glossary....22
10 Mechanical, Packaging, and Orderable Information....22

4 Revision History

NOTE: Page numbers for previous revisions may differ from page numbers in the current version.

Changes from Revision X (May 2020) to Revision Y (August 2023)	Page
• Updated the *Device Information* table to include channel count and package lead size	1

Changes from Revision W (October 2014) to Revision X (May 2020)	Page
• Deleted LMV324S mentions on the front page of the data sheet	1
• Added recommended device notice for LMV321A, LMV358A, and LMV324A	1
• Changed *Device Information* table to sort devices by channel count in ascending order	1
• Changed *Pin Configuration and Functions* section by dividing the Pin Functions table into separate tables per device	3
• Deleted LMV324S pinout information	3
• Changed HBM ESD voltage from 2500 V to 2000 V	5
• Changed CDM ESD voltage from 1500 V to 1000 V	5
• Deleted Shutdown voltage threshold for LMV324S	5
• Changed *Thermal Information* section by dividing the *Thermal Information* table into separate tables per device	5
• Changed Thermal Information for LMV321	5
• Deleted LMV324S Thermal Information	5
• Changed Thermal Information for LMV324	5
• Changed Thermal Information for LMV358	6
• Deleted LMV324S test condition for supply current	6
• Changed output short-circuit current for sourcing from 60 mA to 40 mA	7
• Changed output short-circuit current for sinking from 160 mA to 40 mA	7
• Added specified by characterization table notes to output short-circuit current, output swing, and input bias current specifications	7

Copyright © 2023 Texas Instruments Incorporated

5 Pin Configuration and Functions

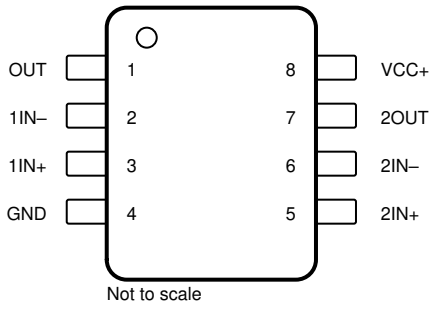

Figure 5-1. D, DDU, DGK, and PW Packages, 8-Pin SOIC, VSSOP, and TSSOP (Top View)

Table 5-1. Pin Functions: LMV358

PIN		TYPE(1)	DESCRIPTION
NAME	NO.		
1IN+	3	I	Noninverting input
1IN–	2	I	Inverting input
2IN+	5	I	Noninverting input
2IN–	6	I	Inverting input
2OUT	7	O	Output
GND	4	—	Negative supply
OUT	1	O	Output
VCC+	8	—	Positive supply

(1) I = input, O = output

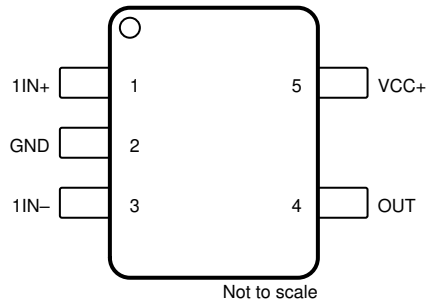

Figure 5-2. DBV and DCK Packages, 5-Pin SOT-23 and SC-70 (Top View)

Table 5-2. Pin Functions: LMV321

PIN		TYPE(1)	DESCRIPTION
NAME	NO.		
1IN+	1	I	Noninverting input
1IN–	3	I	Inverting input
GND	2	—	Negative supply
OUT	4	O	Output
VCC+	5	—	Positive supply

(1) I = input, O = output

Copyright © 2023 Texas Instruments Incorporated

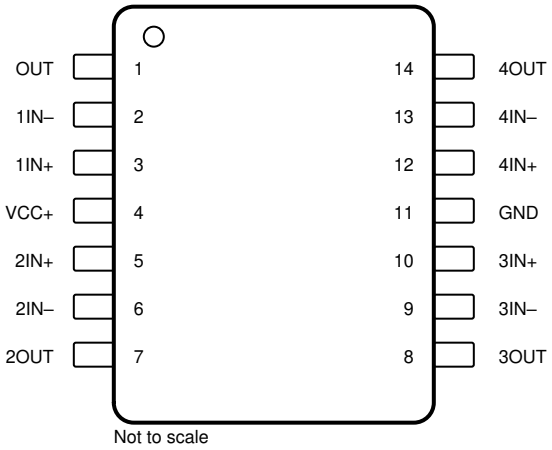

Figure 5-3. D and PW Packages, 14-Pin SOIC and TSSOP (Top View)

Table 5-3. Pin Functions: LMV324

PIN		TYPE(1)	DESCRIPTION
NAME	NO.		
3/4 SHDN	—	I	Shutdown (logic low) / enable (logic high)
1/2 SHDN	—	I	Shutdown (logic low) / enable (logic high)
1IN+	3	I	Noninverting input
1IN–	2	I	Inverting input
2IN+	5	I	Noninverting input
2IN–	6	I	Inverting input
2OUT	7	O	Output
3IN+	10	I	Noninverting input
3IN–	9	I	Inverting input
3OUT	8	O	Output
4IN+	12	I	Noninverting input
4IN–	13	I	Inverting input
4OUT	14	O	Output
GND	11	—	Negative supply
OUT	1	O	OUT
VCC+	4	—	Positive supply

(1) I = input, O = output

Copyright © 2023 Texas Instruments Incorporated

6 Specifications

6.1 Absolute Maximum Ratings

over operating free-air temperature range (unless otherwise noted) (1)

			MIN	MAX	UNIT
V_{CC}	Supply voltage(2)			5.5	V
V_{ID}	Differential input voltage(3)			±5.5	V
V_I	Input voltage range (either input)		–0.2	5.7	V
	Duration of output short circuit (one amplifier) to ground(4)	At or below T_A = 25°C, V_{CC} ≤ 5.5 V	Unlimited		
T_J	Operating virtual junction temperature			150	°C
T_{stg}	Storage temperature range		–65	150	°C

(1) Stresses beyond those listed under *Absolute Maximum Ratings* may cause permanent damage to the device. These are stress ratings only, and functional operation of the device at these or any other conditions beyond those indicated under *Recommended Operating Conditions* is not implied. Exposure to absolute-maximum-rated conditions for extended periods may affect device reliability.
(2) All voltage values (except differential voltages and V_{CC} specified for the measurement of I_{OS}) are with respect to the network GND.
(3) Differential voltages are at IN+ with respect to IN–.
(4) Short circuits from outputs to V_{CC} can cause excessive heating and eventual destruction.

6.2 ESD Ratings

			MIN	MAX	UNIT
$V_{(ESD)}$	Electrostatic discharge	Human body model (HBM), per ANSI/ESDA/JEDEC JS-001, all pins(1)	0	2000	V
		Charged device model (CDM), per JEDEC specification JESD22-C101, all pins(2)	0	1000	

(1) JEDEC document JEP155 states that 500-V HBM allows safe manufacturing with a standard ESD control process.
(2) JEDEC document JEP157 states that 250-V CDM allows safe manufacturing with a standard ESD control process.

6.3 Recommended Operating Conditions

			MIN	MAX	UNIT
V_{CC}	Supply voltage (single-supply operation)		2.7	5.5	V
T_A	Operating free-air temperature	I temperature (LMV321, LMV358, LMV324, LMV321IDCK)	–40	125	°C
		Q temperature	–40	125	

6.4 Thermal Information: LMV321

THERMAL METRIC(1)		LMV321		UNIT
		DBV (SOT-23)	DCK (SC-70)	
		5 PINS	5 PINS	
$R_{\theta JA}$	Junction-to-ambient thermal resistance	232.9	239.6	°C/W

(1) For more information about traditional and new thermal metrics, see the *Semiconductor and IC Package Thermal Metrics* application report.

6.5 Thermal Information: LMV324

THERMAL METRIC(1)		LMV324		UNIT
		D (SOIC)	PW (TSSOP)	
		14 PINS	14 PINS	
$R_{\theta JA}$	Junction-to-ambient thermal resistance	102.1	148.3	°C/W

(1) For more information about traditional and new thermal metrics, see the *Semiconductor and IC Package Thermal Metrics* application report.

Copyright © 2023 Texas Instruments Incorporated

6.6 Thermal Information: LMV358

THERMAL METRIC[1]		LMV358				UNIT
		D (SOIC)	DGK (VSSOP)	DDU (VSSOP)	PW (TSSOP)	
		8 PINS	8 PINS	8 PINS	8 PINS	
$R_{\theta JA}$	Junction-to-ambient thermal resistance	207.9	201.2	210	200.7	°C/W

(1) For more information about traditional and new thermal metrics, see the *Semiconductor and IC Package Thermal Metrics* application report.

6.7 Electrical Characteristics: V_{CC}+ = 2.7 V

V_{CC+} = 2.7 V, T_A = 25°C (unless otherwise noted)

PARAMETER		TEST CONDITIONS		MIN	TYP[1]	MAX	UNIT
V_{IO}	Input offset voltage				1.7	7	mV
α_{VIO}	Average temperature coefficient of input offset voltage				5		µV/°C
I_{IB}	Input bias current				11	250	nA
I_{IO}	Input offset current				5	50	nA
CMRR	Common-mode rejection ratio	V_{CM} = 0 to 1.7 V		50	63		dB
k_{SVR}	Supply-voltage rejection ratio	V_{CC} = 2.7 V to 5 V, V_O = 1 V		50	60		dB
V_{ICR}	Common-mode input voltage range	CMRR ≥ 50 dB		0	–0.2		V
					1.9	1.7	
V_O	Output swing	R_L = 10 kΩ to 1.35 V	High level	V_{CC} – 100	V_{CC} – 10		mV
			Low level		60	180	
I_{CC}	Supply current	LMV321I			80	170	µA
		LMV358I (both amplifiers)			140	340	
		LMV324I (all four amplifiers)			260	680	
B_1	Unity-gain bandwidth	C_L = 200 pF			1		MHz
Φ_m	Phase margin				60		deg
G_m	Gain margin				10		dB
V_n	Equivalent input noise voltage	f = 1 kHz			46		nV/√Hz
I_n	Equivalent input noise current	f = 1 kHz			0.17		pA/√Hz

(1) Typical values represent the likely parametric nominal values determined at the time of characterization. Typical values depend on the application and configuration and may vary over time. Typical values are not ensured on production material.

Copyright © 2023 Texas Instruments Incorporated

6.8 Electrical Characteristics: V_{CC}+ = 5 V

V_{CC+} = 5 V, at specified free-air temperature (unless otherwise noted)

PARAMETER		TEST CONDITIONS	MIN	TYP(1)	MAX	UNIT
V_{IO}	Input offset voltage	T_A = 25°C		1.7	7	mV
		T_A = –40°C to +125°C			9	
α_{VIO}	Average temperature coefficient of input offset voltage	T_A = 25°C		5		µV/°C
I_{IB}	Input bias current	T_A = 25°C		15	250(1)	nA
		T_A = –40°C to +125°C			500(1)	
I_{IO}	Input offset current	T_A = 25°C		5	50(1)	nA
		T_A = –40°C to +125°C			150(1)	
CMRR	Common-mode rejection ratio	V_{CM} = 0 to 4 V T_A = 25°C	50	65		dB
k_{SVR}	Supply-voltage rejection ratio	V_{CC} = 2.7 V to 5 V, V_O = 1 V, V_{CM} = 1 V T_A = 25°C	50	60		dB
V_{ICR}	Common-mode input voltage range	CMRR ≥ 50 dB, T_A = 25°C	0	–0.2		V
				4.2	4	
V_O	Output swing	R_L = 2 kΩ to 2.5 V, high level, T_A = 25°C	V_{CC} – 300	V_{CC} – 40		mV
		R_L = 2 kΩ to 2.5 V, high level, T_A = –40°C to +125°C	V_{CC} – 400(1)			
		T_A = 25°C, low level		120	300	
		T_A = –40°C to +125°C, low level			400(1)	
		R_L = 10 kΩ to 2.5 V, high level, T_A = 25°C	V_{CC} – 100	V_{CC} – 10		
		R_L = 10 kΩ to 2.5 V, high level, T_A = –40°C to +125°C	V_{CC} – 200(1)			
		T_A = 25°C, low level		65	180	
		T_A = –40°C to +125°C, low level			280(1)	
A_{VD}	Large-signal differential voltage gain	R_L = 2 kΩ, T_A = 25°C	15	100		V/mV
		R_L = 2 kΩ, T_A = –40°C to +125°C	10(1)			
I_{OS}	Output short-circuit current	Sourcing, V_O = 0 V, T_A = 25°C	5(1)	40		mA
		Sinking, V_O = 5 V, T_A = 25°C	10(1)	40		
I_{CC}	Supply current	LMV321I, T_A = 25°C		130	250	µA
		LMV321I, T_A = –40°C to +125°C			350	
		LMV358I (both amplifiers), T_A = 25°C		210	440	
		LMV358I (both amplifiers), T_A = –40°C to +125°C			615	
		LMV324I (all four amplifiers), T_A = 25°C		410	830	
		LMV324I (all four amplifiers), T_A = –40°C to +125°C			1160	
B_1	Unity-gain bandwidth	C_L = 200 pF, T_A = 25°C		1		MHz
Φ_m	Phase margin	T_A = 25°C		60		deg
G_m	Gain margin	T_A = 25°C		10		dB
V_n	Equivalent input noise voltage	f = 1 kHz, T_A = 25°C		39		nV/√Hz
I_n	Equivalent input noise current	f = 1 kHz, T_A = 25°C		0.21		pA/√Hz
SR	Slew rate	T_A = 25°C		1		V/µs

(1) Specified by characterization. Not production tested.

Copyright © 2023 Texas Instruments Incorporated

6.9 Typical Characteristics

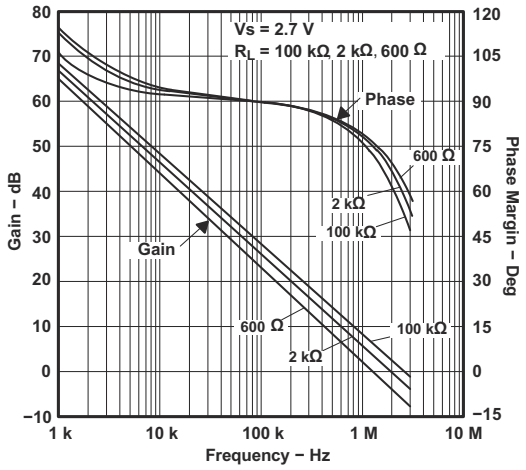

Figure 6-1. LMV321 Frequency Response vs Resistive Load

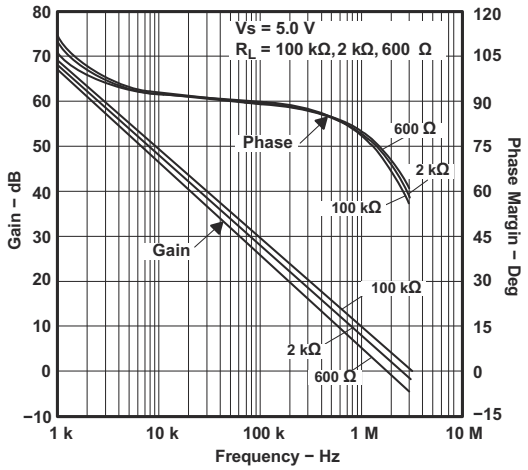

Figure 6-2. LMV321 Frequency Response vs Resistive Load

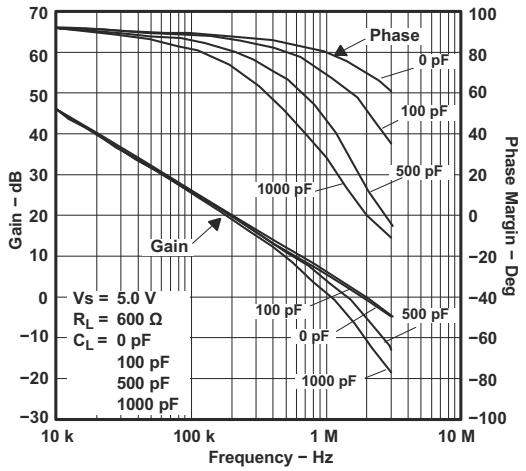

Figure 6-3. LMV321 Frequency Response vs Capacitive Load

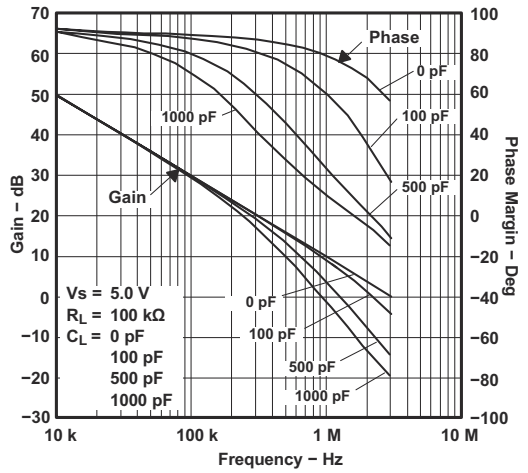

Figure 6-4. LMV321 Frequency Response vs Capacitive Load

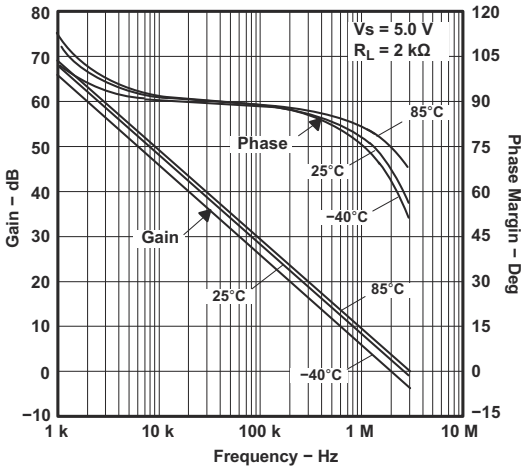

Figure 6-5. LMV321 Frequency Response vs Temperature

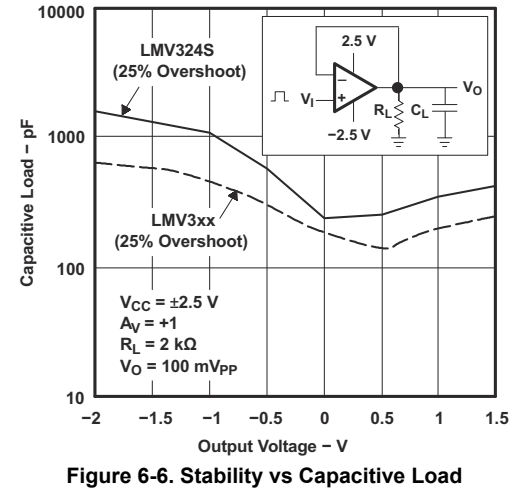

Figure 6-6. Stability vs Capacitive Load

Copyright © 2023 Texas Instruments Incorporated

6.9 Typical Characteristics (continued)

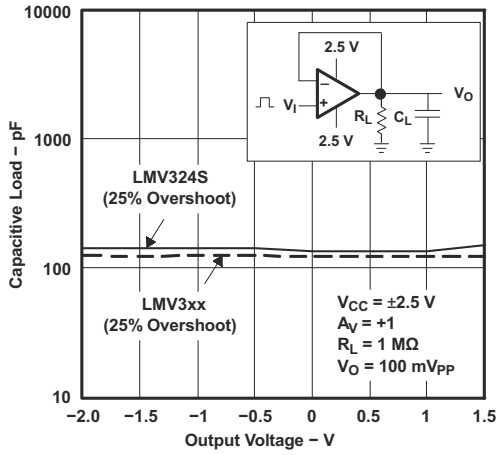

Figure 6-7. Stability vs Capacitive Load

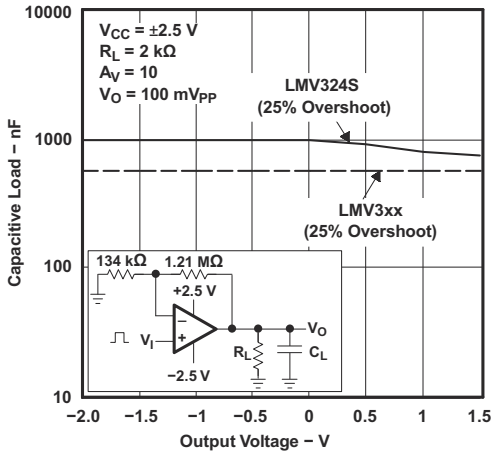

Figure 6-8. Stability vs Capacitive Load

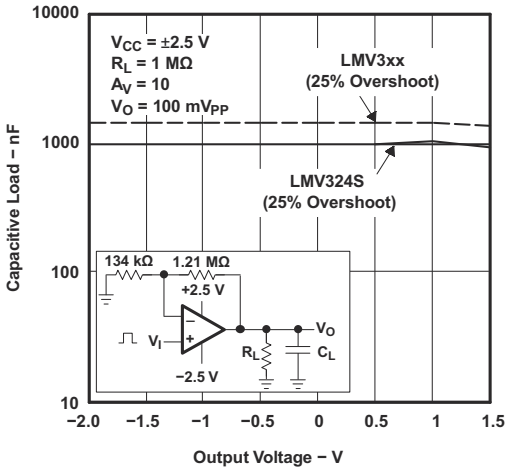

Figure 6-9. Stability vs Capacitive Load

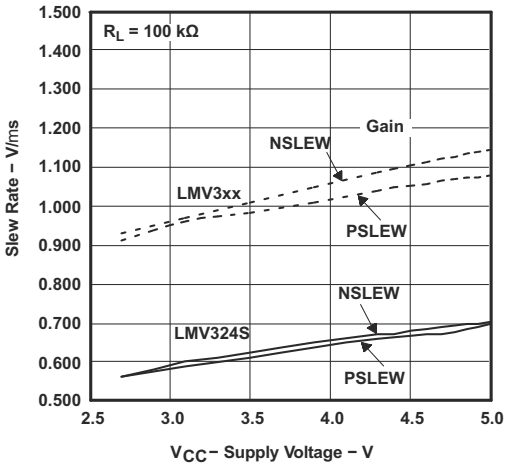

Figure 6-10. Slew Rate vs Supply Voltage

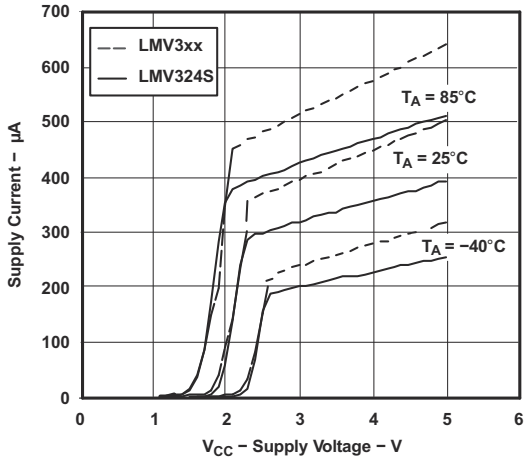

Figure 6-11. Supply Current vs Supply Voltage: Quad Amplifier

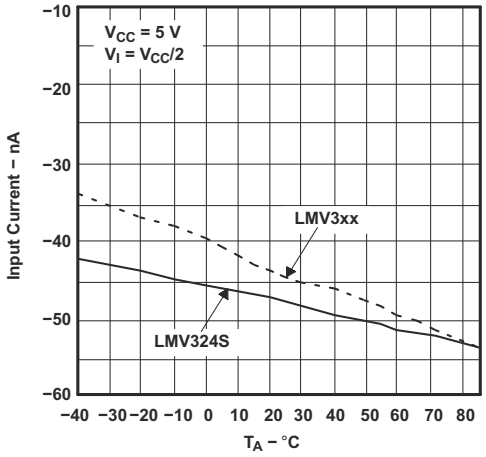

Figure 6-12. Input Current vs Temperature

6.9 Typical Characteristics (continued)

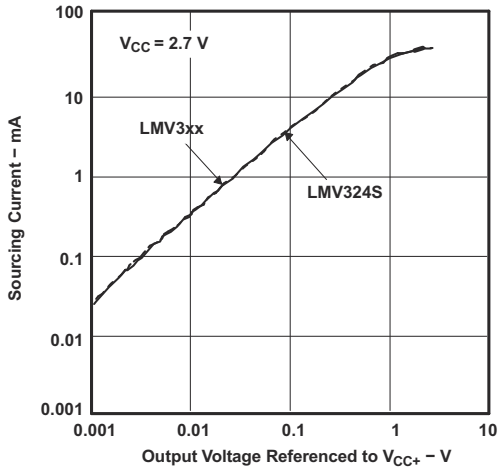

Figure 6-13. Source Current vs Output Voltage

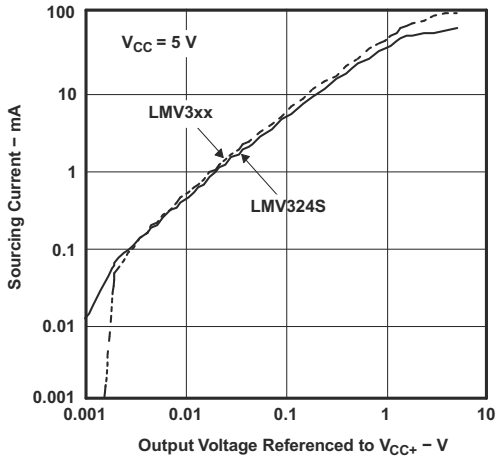

Figure 6-14. Source Current vs Output Voltage

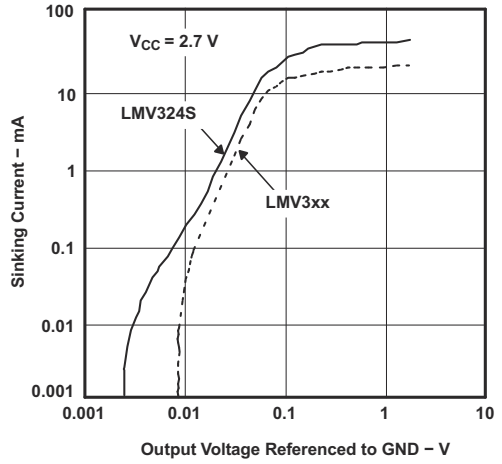

Figure 6-15. Sinking Current vs Output Voltage

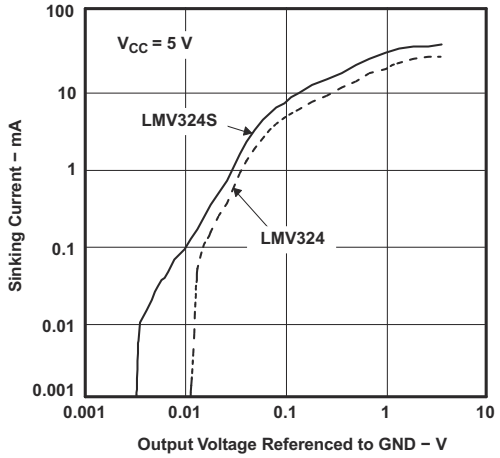

Figure 6-16. Sinking Current vs Output Voltage

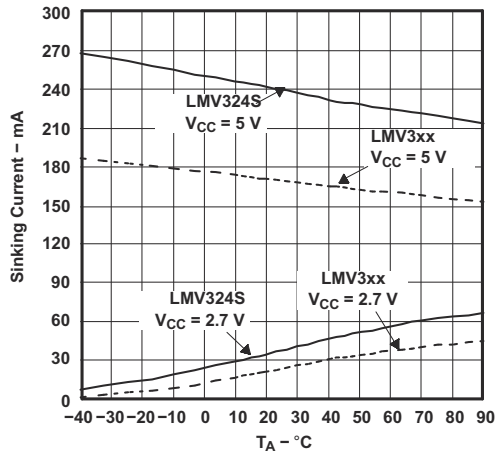

Figure 6-17. Short-Circuit Current vs Temperature

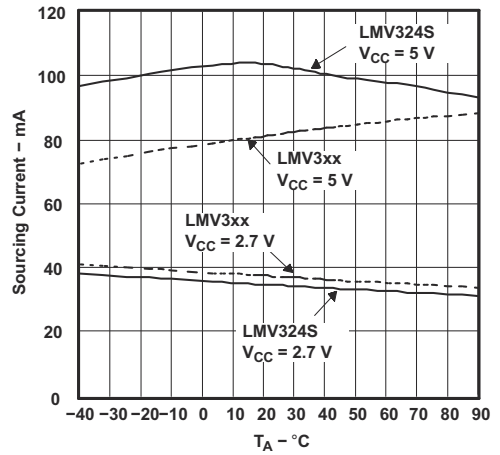

Figure 6-18. Short-Circuit Current vs Temperature

Copyright © 2023 Texas Instruments Incorporated

6.9 Typical Characteristics (continued)

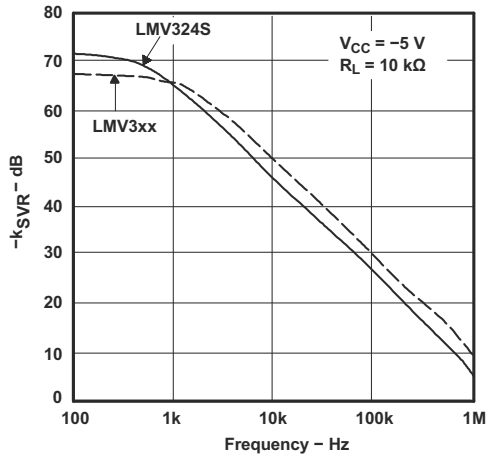

Figure 6-19. $-k_{SVR}$ vs Frequency

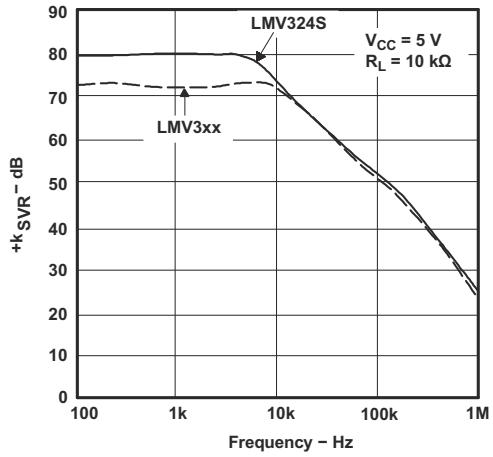

Figure 6-20. $+k_{SVR}$ vs Frequency

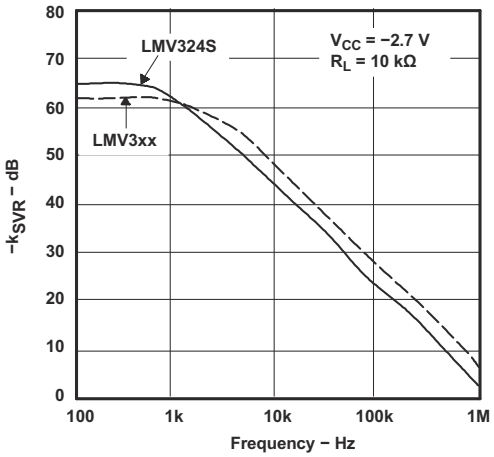

Figure 6-21. $-k_{SVR}$ vs Frequency

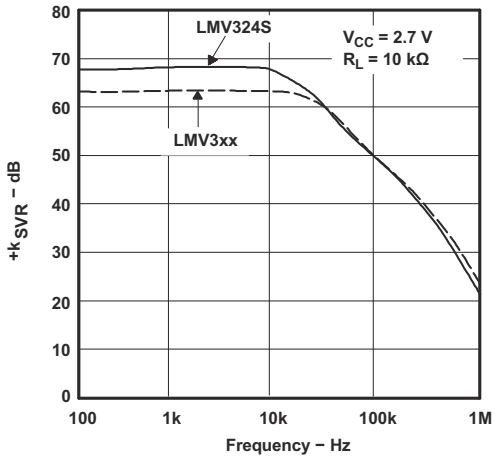

Figure 6-22. $+k_{SVR}$ vs Frequency

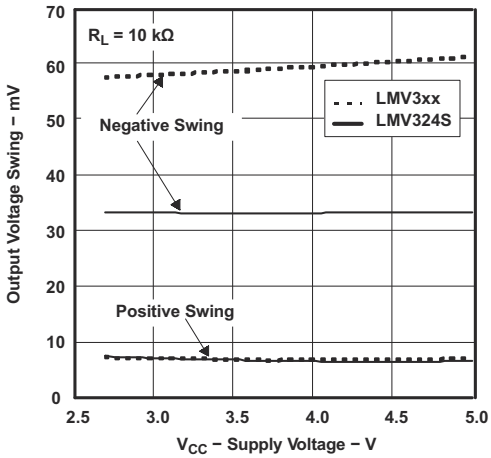

Figure 6-23. Output Voltage Swing From Rails vs Supply Voltage

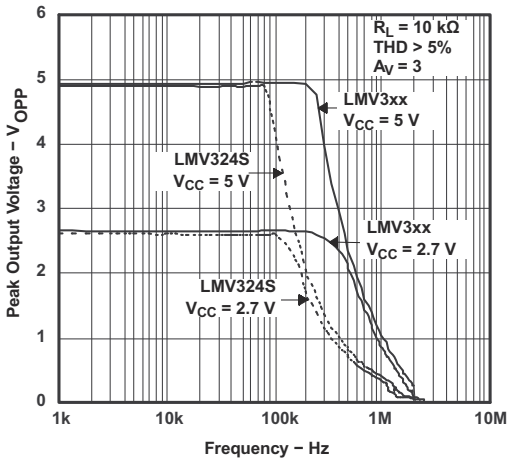

Figure 6-24. Output Voltage vs Frequency

Copyright © 2023 Texas Instruments Incorporated

6.9 Typical Characteristics (continued)

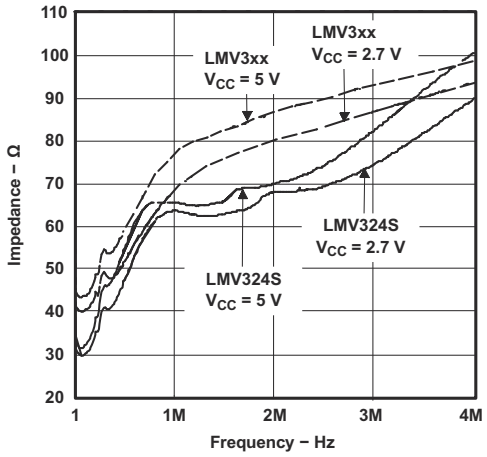

Figure 6-25. Open-Loop Output Impedance vs Frequency

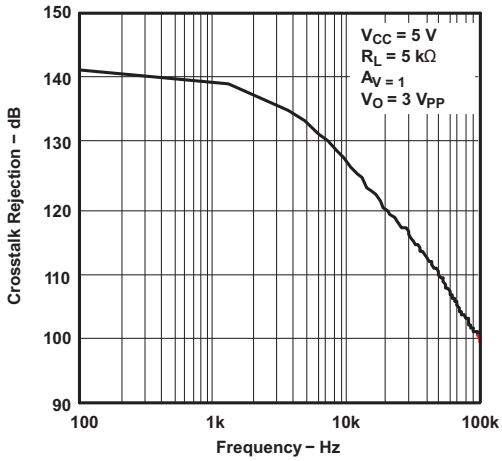

Figure 6-26. Cross-Talk Rejection vs Frequency

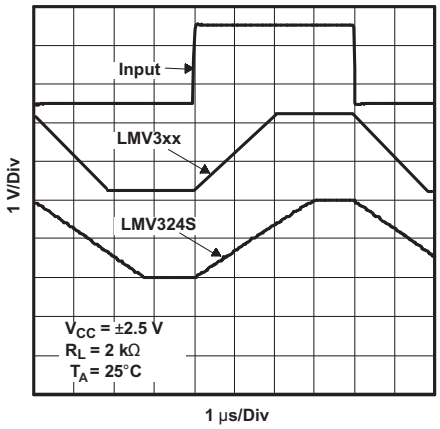

Figure 6-27. Noninverting Large-Signal Pulse Response

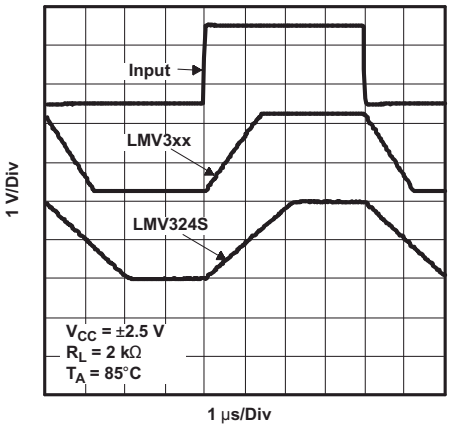

Figure 6-28. Noninverting Large-Signal Pulse Response

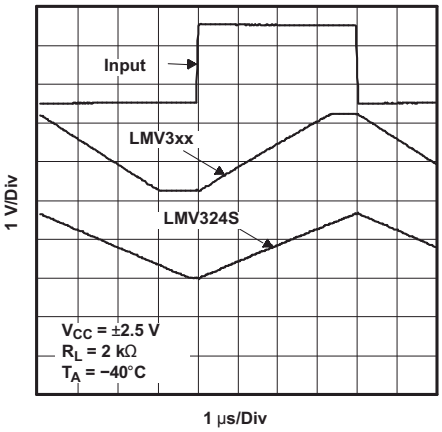

Figure 6-29. Noninverting Large-Signal Pulse Response

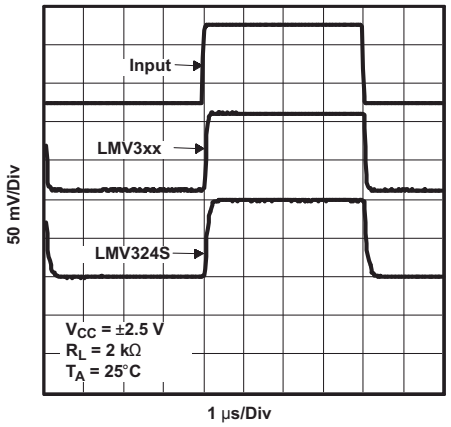

Figure 6-30. Noninverting Small-Signal Pulse Response

Copyright © 2023 Texas Instruments Incorporated

6.9 Typical Characteristics (continued)

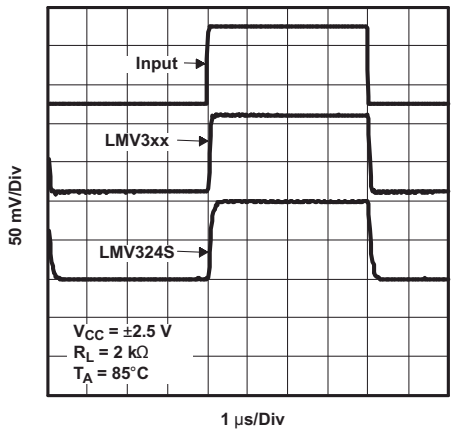

Figure 6-31. Noninverting Small-Signal Pulse Response

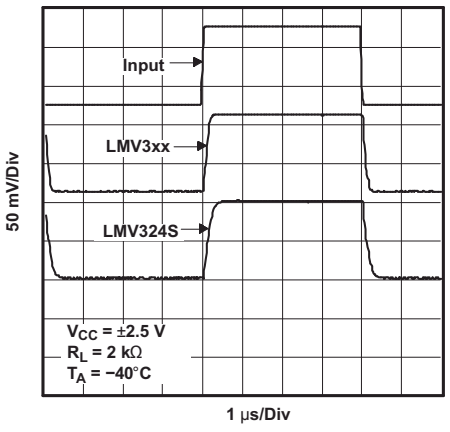

Figure 6-32. Noninverting Small-Signal Pulse Response

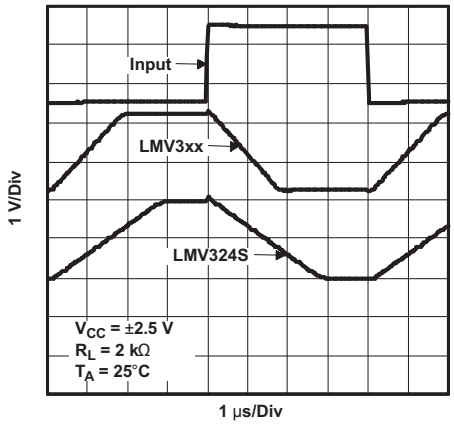

Figure 6-33. Inverting Large-Signal Pulse Response

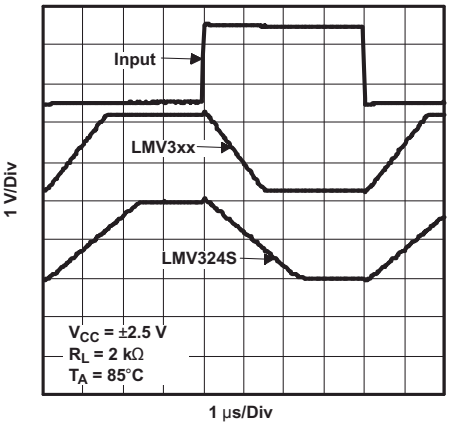

Figure 6-34. Inverting Large-Signal Pulse Response

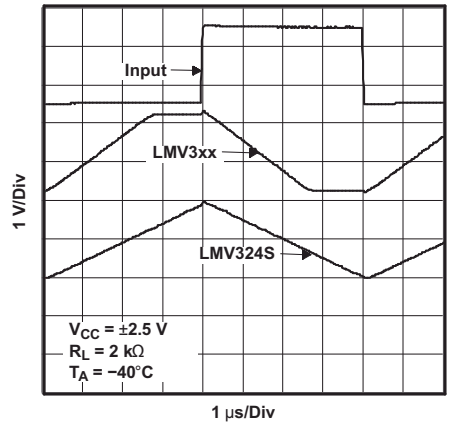

Figure 6-35. Inverting Large-Signal Pulse Response

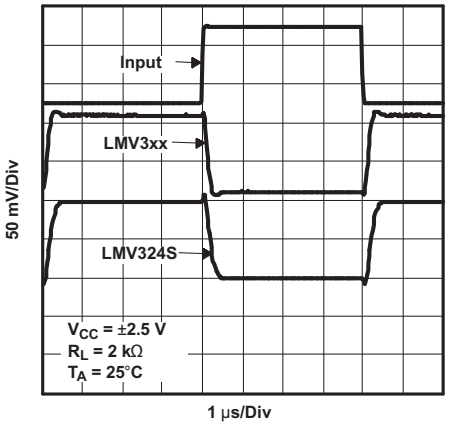

Figure 6-36. Inverting Small-Signal Pulse Response

6.9 Typical Characteristics (continued)

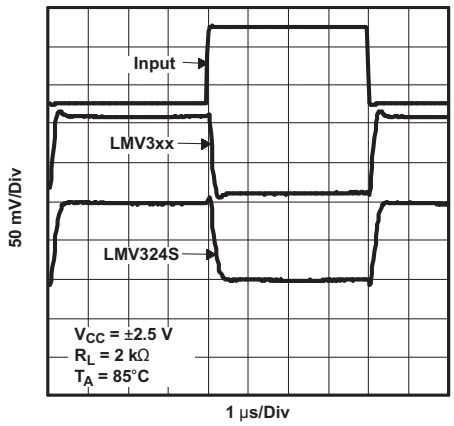

Figure 6-37. Inverting Small-Signal Pulse Response

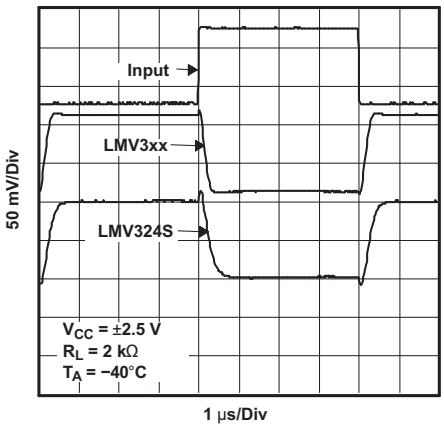

Figure 6-38. Inverting Small-Signal Pulse Response

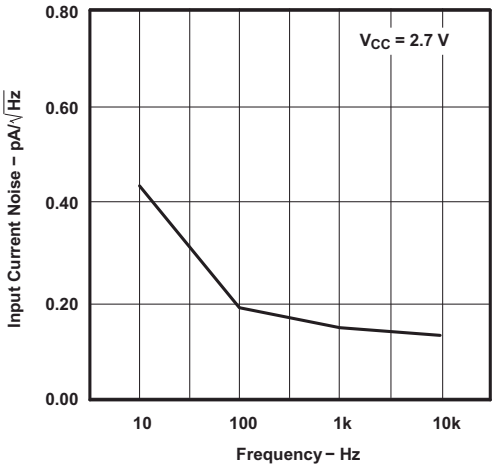

Figure 6-39. Input Current Noise vs Frequency

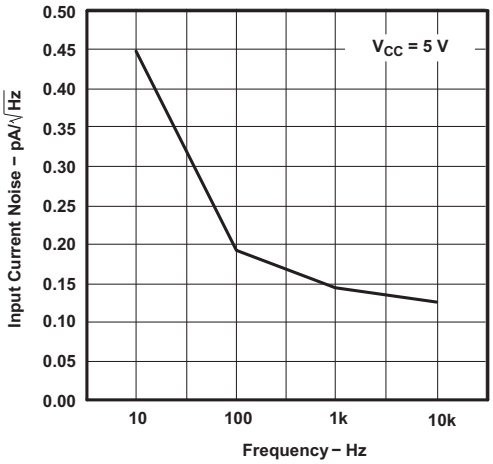

Figure 6-40. Input Current Noise vs Frequency

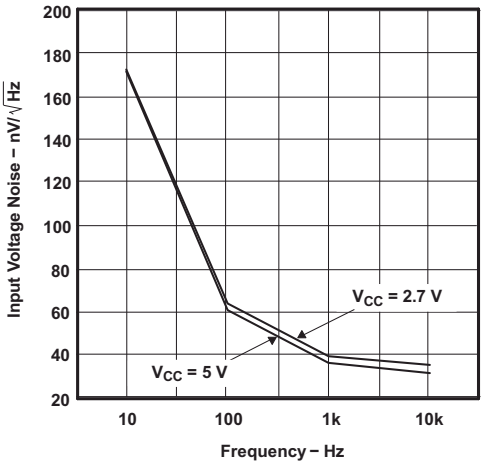

Figure 6-41. Input Voltage Noise vs Frequency

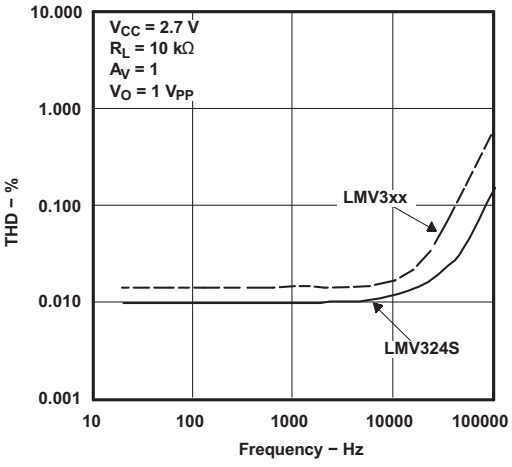

Figure 6-42. THD + N vs Frequency

Copyright © 2023 Texas Instruments Incorporated

6.9 Typical Characteristics (continued)

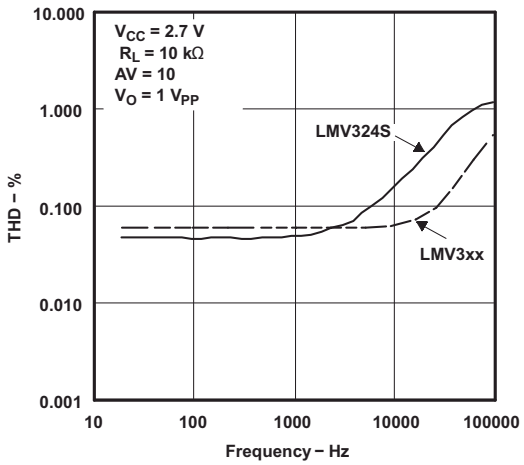

Figure 6-43. THD + N vs Frequency

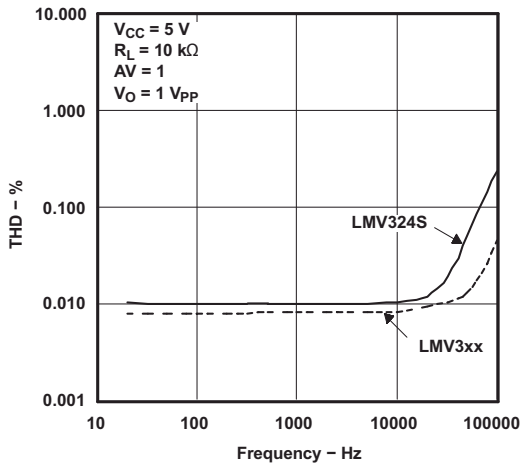

Figure 6-44. THD + N vs Frequency

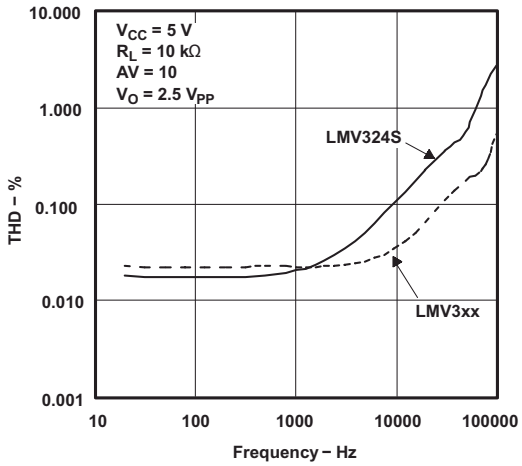

Figure 6-45. THD + N vs Frequency

7 Detailed Description

7.1 Overview

The LMV321, LMV358, and LMV324 devices are single, dual, and quad low-voltage (2.7 V to 5.5 V) operational amplifiers with rail-to-rail output swing.

The LMV321, LMV358, and LMV324 devices are the most cost-effective solutions for applications where low-voltage operation, space saving, and low cost are needed. These amplifiers are designed specifically for low-voltage (2.7 V to 5 V) operation, with performance specifications meeting or exceeding the LM358 and LM324 devices that operate from 5 V to 30 V. Additional features of the LMV3xx devices are a common-mode input voltage range that includes ground, 1-MHz unity-gain bandwidth, and 1-V/µs slew rate.

The LMV321 device is available in the ultra-small package, which is approximately one-half the size of the DBV (SOT-23) package. This package saves space on printed circuit boards and enables the design of small portable electronic devices. It also allows the designer to place the device closer to the signal source to reduce noise pickup and increase signal integrity.

7.2 Functional Block Diagram

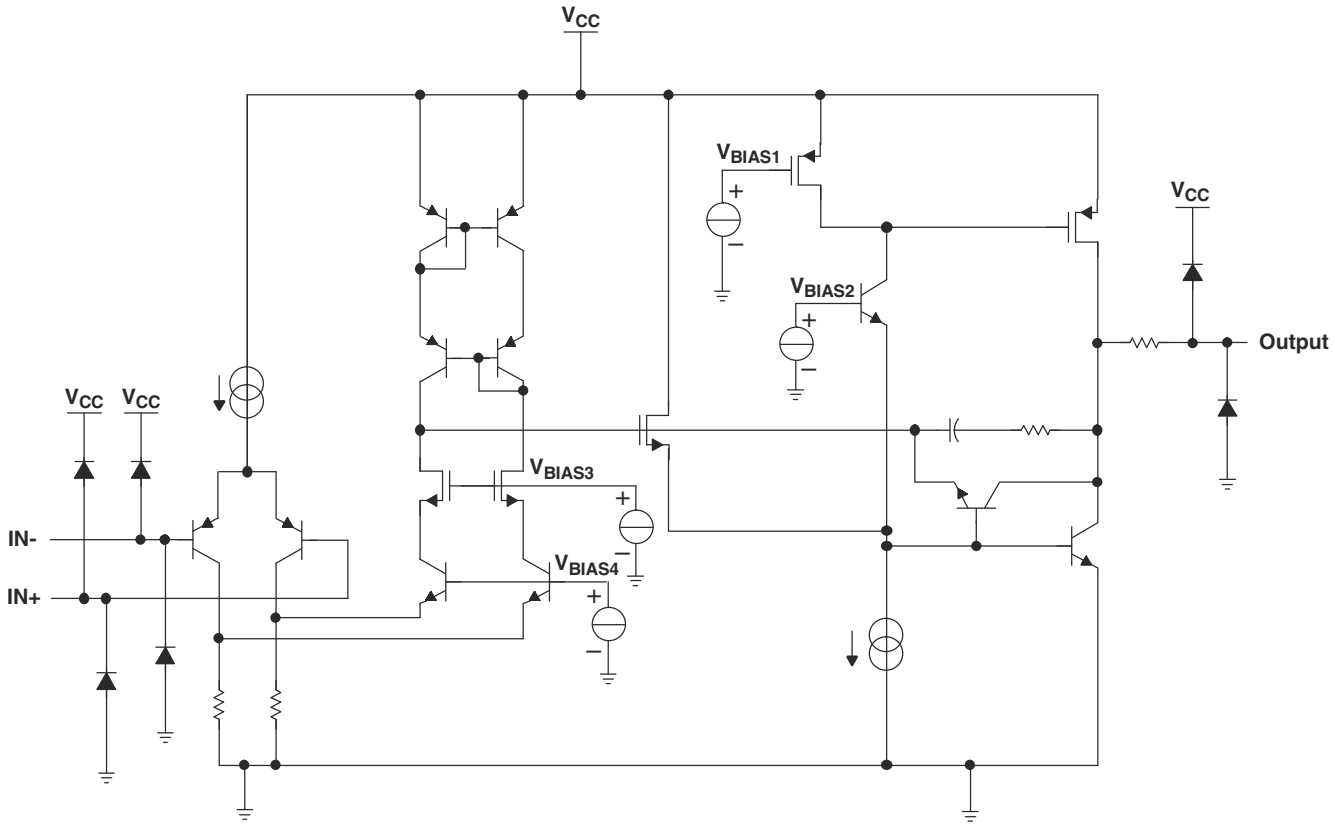

Copyright © 2023 Texas Instruments Incorporated

7.3 Feature Description

7.3.1 Operating Voltage

The LMV321, LMV358, and LMV324 devices are fully specified and ensured for operation from 2.7 V to 5 V. In addition, many specifications apply from –40°C to 125°C. Parameters that vary significantly with operating voltages or temperature are shown in the *Typical Characteristics* graphs.

7.3.2 Unity-Gain Bandwidth

The unity-gain bandwidth is the frequency up to which an amplifier with a unity gain may be operated without greatly distorting the signal. The LMV321, LMV358, LMV324 devices have a 1-MHz unity-gain bandwidth.

7.3.3 Slew Rate

The slew rate is the rate at which an operational amplifier can change its output when there is a change on the input. The LMV321, LMV358, LMV324 devices have a 1-V/μs slew rate.

7.4 Device Functional Modes

The LMV321, LMV358, LMV324 devices are powered on when the supply is connected. Each of these devices can be operated as a single supply operational amplifier or dual supply amplifier depending on the application.

Copyright © 2023 Texas Instruments Incorporated

8 Application and Implementation

Note

Information in the following applications sections is not part of the TI component specification, and TI does not warrant its accuracy or completeness. TI's customers are responsible for determining suitability of components for their purposes. Customers should validate and test their design implementation to confirm system functionality.

8.1 Typical Application

Some applications require differential signals. Figure 8-1 shows a simple circuit to convert a single-ended input of 0.5 to 2 V into differential output of ±1.5 V on a single 2.7-V supply. The output range is intentionally limited to maximize linearity. The circuit is composed of two amplifiers. One amplifier acts as a buffer and creates a voltage, V_{OUT+}. The second amplifier inverts the input and adds a reference voltage to generate $V_{OUT–}$. Both V_{OUT+} and $V_{OUT–}$ range from 0.5 to 2 V. The difference, V_{DIFF}, is the difference between V_{OUT+} and $V_{OUT–}$. The LMV358 was used to build this circuit.

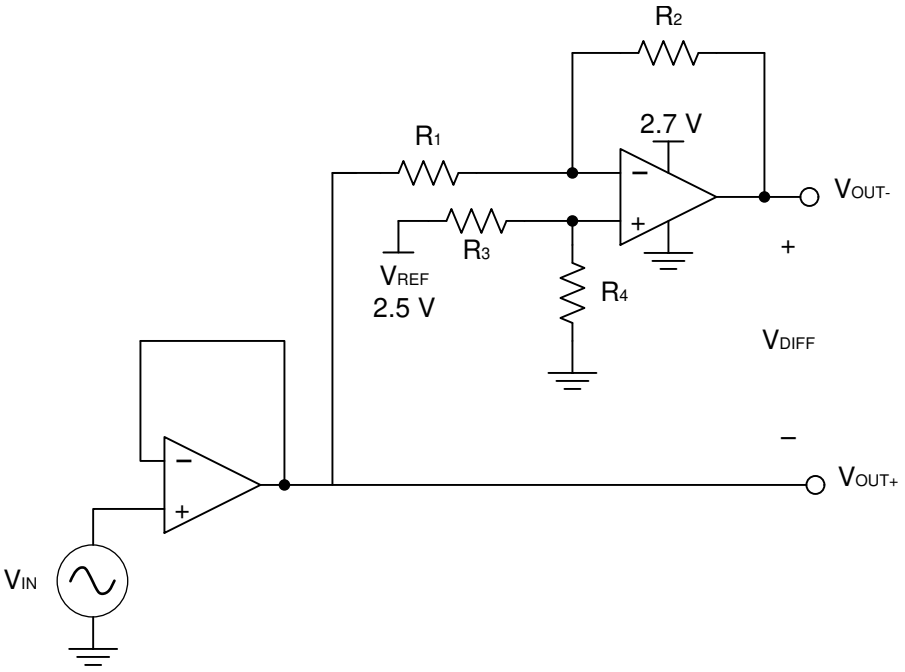

Figure 8-1. Schematic for Single-Ended Input to Differential Output Conversion

Copyright © 2023 Texas Instruments Incorporated

8.1.1 Design Requirements

The design requirements are as follows:

- Supply voltage: 2.7 V
- Reference voltage: 2.5 V
- Input: 0.5 to 2 V
- Output differential: ±1.5 V

8.1.2 Detailed Design Procedure

The circuit in Figure 8-1 takes a single-ended input signal, V_{IN}, and generates two output signals, V_{OUT+} and $V_{OUT–}$ using two amplifiers and a reference voltage, V_{REF}. V_{OUT+} is the output of the first amplifier and is a buffered version of the input signal, V_{IN} (see Equation 1). $V_{OUT–}$ is the output of the second amplifier which uses V_{REF} to add an offset voltage to V_{IN} and feedback to add inverting gain. The transfer function for $V_{OUT–}$ is Equation 2.

$$V_{OUT+} = V_{IN} \tag{1}$$

$$V_{OUT–} = V_{REF} \times \left(\frac{R_4}{R_3 + R_4}\right) \times \left(1 + \frac{R_2}{R_1}\right) – V_{IN} \times \frac{R_2}{R_1} \tag{2}$$

The differential output signal, V_{DIFF}, is the difference between the two single-ended output signals, V_{OUT+} and $V_{OUT–}$. Equation 3 shows the transfer function for V_{DIFF}. By applying the conditions that $R_1 = R_2$ and $R_3 = R_4$, the transfer function is simplified into Equation 6. Using this configuration, the maximum input signal is equal to the reference voltage and the maximum output of each amplifier is equal to the V_{REF}. The differential output range is $2 \times V_{REF}$. Furthermore, the common mode voltage will be one half of V_{REF} (see Equation 7).

$$V_{DIFF} = V_{OUT+} – V_{OUT–} = V_{IN} \times \left(1 + \frac{R_2}{R_1}\right) – V_{REF} \times \left(\frac{R_4}{R_3 + R_4}\right)\left(1 + \frac{R_2}{R_1}\right) \tag{3}$$

$$V_{OUT+} = V_{IN} \tag{4}$$

$$V_{OUT–} = V_{REF} – V_{IN} \tag{5}$$

$$V_{DIFF} = 2 \times V_{IN} – V_{REF} \tag{6}$$

$$V_{cm} = \left(\frac{V_{OUT+} + V_{OUT–}}{2}\right) = \frac{1}{2} V_{REF} \tag{7}$$

8.1.2.1 Amplifier Selection

Linearity over the input range is key for good dc accuracy. The common mode input range and the output swing limitations determine the linearity. In general, an amplifier with rail-to-rail input and output swing is required. Bandwidth is a key concern for this design. Because LMV358 has a bandwidth of 1 MHz, this circuit will only be able to process signals with frequencies of less than 1 MHz.

8.1.2.2 Passive Component Selection

Because the transfer function of $V_{OUT–}$ is heavily reliant on resistors (R_1, R_2, R_3, and R_4), use resistors with low tolerances to maximize performance and minimize error. This design used resistors with resistance values of 36 kΩ with tolerances measured to be within 2%. If the noise of the system is a key parameter, the user can select smaller resistance values (6 kΩ or lower) to keep the overall system noise low. This ensures that the noise from the resistors is lower than the amplifier noise.

Copyright © 2023 Texas Instruments Incorporated

8.1.3 Application Curves

The measured transfer functions in Figure 8-2, Figure 8-3, and Figure 8-4 were generated by sweeping the input voltage from 0 V to 2.5 V. However, this design should only be used between 0.5 V and 2 V for optimum linearity.

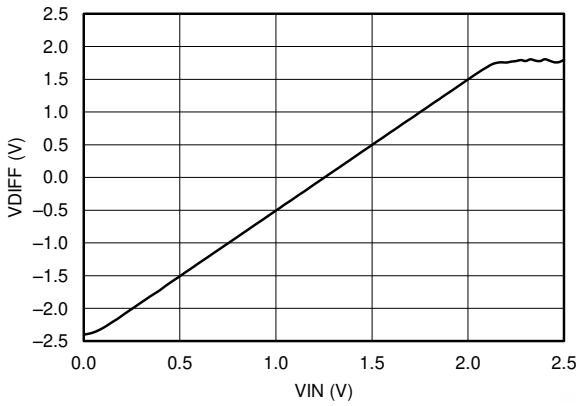

Figure 8-2. Differential Output Voltage vs Input Voltage

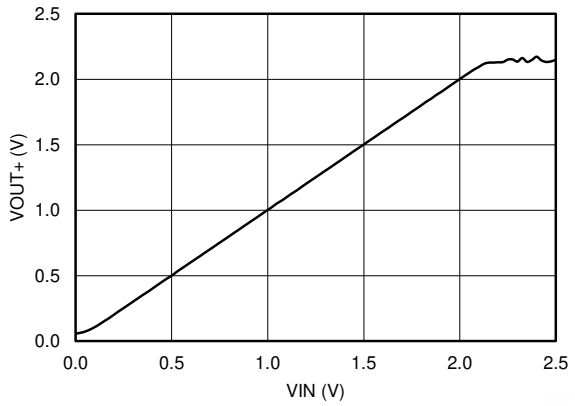

Figure 8-3. Positive Output Voltage Node vs Input Voltage

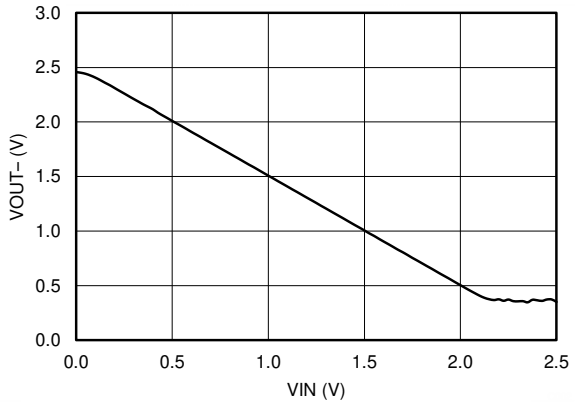

Figure 8-4. Positive Output Voltage Node vs Input Voltage

8.2 Power Supply Recommendations

The LMV321, LMV358, LMV324 devices are specified for operation from 2.7 to 5 V; many specifications apply from –40°C to 125°C. The *Typical Characteristics* section presents parameters that can exhibit significant variance with regard to operating voltage or temperature.

CAUTION

Supply voltages larger than 5.5 V can permanently damage the device (see the *Absolute Maximum Ratings*).

Place 0.1-µF bypass capacitors close to the power-supply pins to reduce errors coupling in from noisy or high impedance power supplies. For more detailed information on bypass capacitor placement, refer to the *Layout section*.

Copyright © 2023 Texas Instruments Incorporated

8.3 Layout

8.3.1 Layout Guidelines

For best operational performance of the device, use good PCB layout practices, including:

- Noise can propagate into analog circuitry through the power pins of the circuit as a whole, as well as the operational amplifier. Bypass capacitors are used to reduce the coupled noise by providing low impedance power sources local to the analog circuitry.
  - Connect low-ESR, 0.1-µF ceramic bypass capacitors between each supply pin and ground, placed as close to the device as possible. A single bypass capacitor from V+ to ground is applicable for single supply applications.
- Separate grounding for analog and digital portions of circuitry is one of the simplest and most-effective methods of noise suppression. One or more layers on multilayer PCBs are usually devoted to ground planes. A ground plane helps distribute heat and reduces EMI noise pickup. Ensure to physically separate digital and analog grounds, paying attention to the flow of the ground current. For more detailed information, refer to *Circuit Board Layout Techniques*.
- To reduce parasitic coupling, run the input traces as far away from the supply or output traces as possible. If it is not possible to keep them separate, it is much better to cross the sensitive trace perpendicular as opposed to in parallel with the noisy trace.
- Place the external components as close to the device as possible. Keeping RF and RG close to the inverting input minimizes parasitic capacitance, as shown in *Layout Example*.
- Keep the length of input traces as short as possible. Always remember that the input traces are the most sensitive part of the circuit.
- Consider a driven, low-impedance guard ring around the critical traces. A guard ring can significantly reduce leakage currents from nearby traces that are at different potentials.

8.3.2 Layout Example

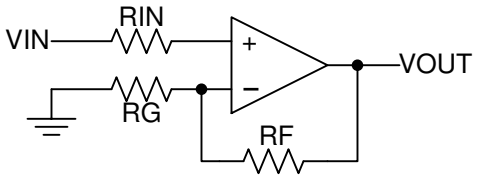

Figure 8-5. Operational Amplifier Schematic for Noninverting Configuration

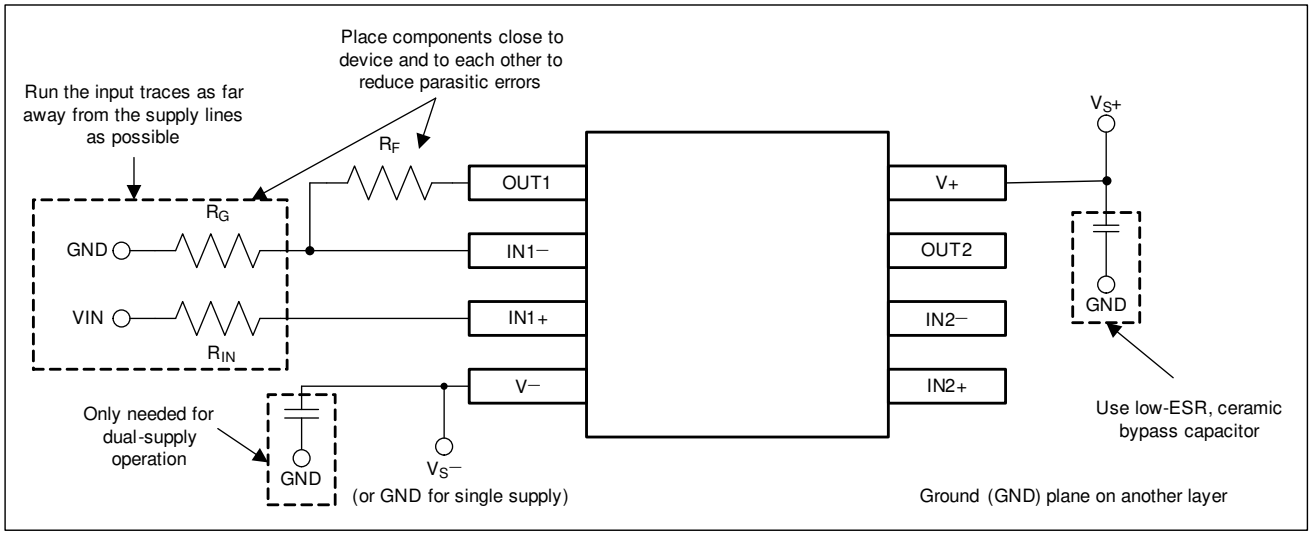

Figure 8-6. Operational Amplifier Board Layout for Noninverting Configuration

9 Device and Documentation Support

9.1 Receiving Notification of Documentation Updates

To receive notification of documentation updates, navigate to the device product folder on ti.com. Click on *Subscribe to updates* to register and receive a weekly digest of any product information that has changed. For change details, review the revision history included in any revised document.

9.2 Support Resources

TI E2E™ support forums are an engineer's go-to source for fast, verified answers and design help — straight from the experts. Search existing answers or ask your own question to get the quick design help you need.

Linked content is provided "AS IS" by the respective contributors. They do not constitute TI specifications and do not necessarily reflect TI's views; see TI's Terms of Use.

9.3 Trademarks

TI E2E™ is a trademark of Texas Instruments.
All trademarks are the property of their respective owners.

9.4 Electrostatic Discharge Caution



This integrated circuit can be damaged by ESD. Texas Instruments recommends that all integrated circuits be handled with appropriate precautions. Failure to observe proper handling and installation procedures can cause damage.

ESD damage can range from subtle performance degradation to complete device failure. Precision integrated circuits may be more susceptible to damage because very small parametric changes could cause the device not to meet its published specifications.

9.5 Glossary

TI Glossary	This glossary lists and explains terms, acronyms, and definitions.

10 Mechanical, Packaging, and Orderable Information

The following pages include mechanical packaging and orderable information. This information is the most current data available for the designated devices. This data is subject to change without notice and revision of this document. For browser based versions of this data sheet, refer to the left hand navigation.

Copyright © 2023 Texas Instruments Incorporated

PACKAGING INFORMATION

Orderable part number	Status (1)	Material type (2)	Package | Pins	Package qty | Carrier	RoHS (3)	Lead finish/ Ball material (4)	MSL rating/ Peak reflow (5)	Op temp (°C)	Part marking (6)
LMV321IDBVR	Active	Production	SOT-23 (DBV) | 5	3000 | LARGE T&R	Yes	NIPDAU	Level-1-260C-UNLIM	-40 to 125	RC1F
LMV321IDBVR.A	Active	Production	SOT-23 (DBV) | 5	3000 | LARGE T&R	Yes	NIPDAU	Level-1-260C-UNLIM	-40 to 125	RC1F
LMV321IDBVR.B	Active	Production	SOT-23 (DBV) | 5	3000 | LARGE T&R	Yes	NIPDAU	Level-1-260C-UNLIM	-40 to 125	RC1F
LMV321IDBVRE4	Active	Production	SOT-23 (DBV) | 5	3000 | LARGE T&R	Yes	NIPDAU	Level-1-260C-UNLIM	-40 to 125	RC1F
LMV321IDBVRG4	Active	Production	SOT-23 (DBV) | 5	3000 | LARGE T&R	Yes	NIPDAU	Level-1-260C-UNLIM	-40 to 125	RC1F
LMV321IDBVT	Active	Production	SOT-23 (DBV) | 5	250 | SMALL T&R	Yes	NIPDAU	Level-1-260C-UNLIM	-40 to 125	RC1F
LMV321IDBVT.A	Active	Production	SOT-23 (DBV) | 5	250 | SMALL T&R	Yes	NIPDAU	Level-1-260C-UNLIM	-40 to 125	RC1F
LMV321IDBVT.B	Active	Production	SOT-23 (DBV) | 5	250 | SMALL T&R	Yes	NIPDAU	Level-1-260C-UNLIM	-40 to 125	RC1F
LMV321IDCKR	Active	Production	SC70 (DCK) | 5	3000 | LARGE T&R	Yes	POST-PLAT AG SPOT | SN	Level-2-260C-1 YEAR	-40 to 125	(R3F, R3K, R3O, R3R, R3Z)
LMV321IDCKR.A	Active	Production	SC70 (DCK) | 5	3000 | LARGE T&R	Yes	SN	Level-2-260C-1 YEAR	-40 to 125	(R3F, R3K, R3O, R3R, R3Z)
LMV321IDCKT	Active	Production	SC70 (DCK) | 5	250 | SMALL T&R	Yes	POST-PLAT AG SPOT | SN	Level-2-260C-1 YEAR	-40 to 125	(R3C, R3F, R3R)
LMV321IDCKT.A	Active	Production	SC70 (DCK) | 5	250 | SMALL T&R	Yes	SN	Level-2-260C-1 YEAR	-40 to 125	(R3C, R3F, R3R)
LMV324ID	Obsolete	Production	SOIC (D) | 14	-	-	Call TI	Call TI	-40 to 125	LMV324I
LMV324IDR	Active	Production	SOIC (D) | 14	2500 | LARGE T&R	Yes	NIPDAU	Level-1-260C-UNLIM	-40 to 125	LMV324I
LMV324IDR.A	Active	Production	SOIC (D) | 14	2500 | LARGE T&R	Yes	NIPDAU	Level-1-260C-UNLIM	-40 to 125	LMV324I
LMV324IDRE4	Active	Production	SOIC (D) | 14	2500 | LARGE T&R	Yes	NIPDAU	Level-1-260C-UNLIM	-40 to 125	LMV324I
LMV324IDRG4	Active	Production	SOIC (D) | 14	2500 | LARGE T&R	Yes	NIPDAU	Level-1-260C-UNLIM	-40 to 125	LMV324I
LMV324IDRG4.A	Active	Production	SOIC (D) | 14	2500 | LARGE T&R	Yes	NIPDAU	Level-1-260C-UNLIM	-40 to 125	LMV324I
LMV324IPWR	Active	Production	TSSOP (PW) | 14	2000 | LARGE T&R	Yes	NIPDAU | SN	Level-1-260C-UNLIM	-40 to 125	MV324I
LMV324IPWR.A	Active	Production	TSSOP (PW) | 14	2000 | LARGE T&R	Yes	NIPDAU	Level-1-260C-UNLIM	-40 to 125	MV324I
LMV324IPWR.B	Active	Production	TSSOP (PW) | 14	2000 | LARGE T&R	Yes	NIPDAU	Level-1-260C-UNLIM	-40 to 125	MV324I
LMV324IPWRE4	Active	Production	TSSOP (PW) | 14	2000 | LARGE T&R	Yes	NIPDAU	Level-1-260C-UNLIM	-40 to 125	MV324I
LMV324IPWRG4	Active	Production	TSSOP (PW) | 14	2000 | LARGE T&R	Yes	NIPDAU	Level-1-260C-UNLIM	-40 to 125	MV324I
LMV324IPWRG4.A	Active	Production	TSSOP (PW) | 14	2000 | LARGE T&R	Yes	NIPDAU	Level-1-260C-UNLIM	-40 to 125	MV324I
LMV324QD	Obsolete	Production	SOIC (D) | 14	-	-	Call TI	Call TI	-40 to 125	LMV324Q
LMV324QDR	Active	Production	SOIC (D) | 14	2500 | LARGE T&R	Yes	NIPDAU	Level-1-260C-UNLIM	-40 to 125	LMV324Q
LMV324QDR.A	Active	Production	SOIC (D) | 14	2500 | LARGE T&R	Yes	NIPDAU	Level-1-260C-UNLIM	-40 to 125	LMV324Q

Orderable part number	Status (1)	Material type (2)	Package | Pins	Package qty | Carrier	RoHS (3)	Lead finish/ Ball material (4)	MSL rating/ Peak reflow (5)	Op temp (°C)	Part marking (6)
LMV324QDRG4	Active	Production	SOIC (D) | 14	2500 | LARGE T&R	Yes	NIPDAU	Level-1-260C-UNLIM	-40 to 125	LMV324Q
LMV324QPW	Obsolete	Production	TSSOP (PW) | 14	-	-	Call TI	Call TI	-40 to 125	MV324Q
LMV324QPWR	Active	Production	TSSOP (PW) | 14	2000 | LARGE T&R	Yes	NIPDAU | SN	Level-2-260C-1 YEAR	-40 to 125	MV324Q
LMV324QPWR.A	Active	Production	TSSOP (PW) | 14	2000 | LARGE T&R	Yes	SN	Level-2-260C-1 YEAR	-40 to 125	MV324Q
LMV324QPWR.B	Active	Production	TSSOP (PW) | 14	2000 | LARGE T&R	Yes	SN	Level-2-260C-1 YEAR	-40 to 125	MV324Q
LMV324QPWRE4	Active	Production	TSSOP (PW) | 14	2000 | LARGE T&R	Yes	NIPDAU	Level-1-260C-UNLIM	-40 to 125	MV324Q
LMV324QPWRE4.A	Active	Production	TSSOP (PW) | 14	2000 | LARGE T&R	Yes	NIPDAU	Level-1-260C-UNLIM	-40 to 125	MV324Q
LMV324QPWRE4.B	Active	Production	TSSOP (PW) | 14	2000 | LARGE T&R	Yes	NIPDAU	Level-1-260C-UNLIM	-40 to 125	MV324Q
LMV358ID	Obsolete	Production	SOIC (D) | 8	-	-	Call TI	Call TI	-40 to 125	MV358I
LMV358IDDUR	Obsolete	Production	VSSOP (DDU) | 8	-	-	Call TI	Call TI	-40 to 125	RA5R
LMV358IDGKR	Active	Production	VSSOP (DGK) | 8	2500 | LARGE T&R	Yes	NIPDAU | NIPDAUAG	Level-2-260C-1 YEAR	-40 to 125	(R5B, R5Q, R5R)
LMV358IDGKR.A	Active	Production	VSSOP (DGK) | 8	2500 | LARGE T&R	Yes	NIPDAUAG	Level-2-260C-1 YEAR	-40 to 125	(R5B, R5Q, R5R)
LMV358IDGKR.B	Active	Production	VSSOP (DGK) | 8	2500 | LARGE T&R	Yes	NIPDAUAG	Level-2-260C-1 YEAR	-40 to 125	(R5B, R5Q, R5R)
LMV358IDGKRG4	Active	Production	VSSOP (DGK) | 8	2500 | LARGE T&R	Yes	NIPDAUAG	Level-2-260C-1 YEAR	-40 to 125	(R5B, R5Q, R5R)
LMV358IDR	Active	Production	SOIC (D) | 8	2500 | LARGE T&R	Yes	NIPDAU	Level-1-260C-UNLIM	-40 to 125	MV358I
LMV358IDR.A	Active	Production	SOIC (D) | 8	2500 | LARGE T&R	Yes	NIPDAU	Level-1-260C-UNLIM	-40 to 125	MV358I
LMV358IDR.B	Active	Production	SOIC (D) | 8	2500 | LARGE T&R	Yes	NIPDAU	Level-1-260C-UNLIM	-40 to 125	MV358I
LMV358IDRE4	Active	Production	SOIC (D) | 8	2500 | LARGE T&R	Yes	NIPDAU	Level-1-260C-UNLIM	-40 to 125	MV358I
LMV358IDRG4	Active	Production	SOIC (D) | 8	2500 | LARGE T&R	Yes	NIPDAU	Level-1-260C-UNLIM	-40 to 125	MV358I
LMV358IDRG4.A	Active	Production	SOIC (D) | 8	2500 | LARGE T&R	Yes	NIPDAU	Level-1-260C-UNLIM	-40 to 125	MV358I
LMV358IDRG4.B	Active	Production	SOIC (D) | 8	2500 | LARGE T&R	Yes	NIPDAU	Level-1-260C-UNLIM	-40 to 125	MV358I
LMV358IPW	Obsolete	Production	TSSOP (PW) | 8	-	-	Call TI	Call TI	-40 to 125	MV358I
LMV358IPWR	Active	Production	TSSOP (PW) | 8	2000 | LARGE T&R	Yes	NIPDAU | SN	Level-2-260C-1 YEAR	-40 to 125	MV358I
LMV358IPWR.A	Active	Production	TSSOP (PW) | 8	2000 | LARGE T&R	Yes	SN	Level-2-260C-1 YEAR	-40 to 125	MV358I
LMV358IPWR.B	Active	Production	TSSOP (PW) | 8	2000 | LARGE T&R	Yes	SN	Level-2-260C-1 YEAR	-40 to 125	MV358I
LMV358IPWRG4	Active	Production	TSSOP (PW) | 8	2000 | LARGE T&R	Yes	NIPDAU	Level-1-260C-UNLIM	-40 to 125	MV358I
LMV358IPWRG4.A	Active	Production	TSSOP (PW) | 8	2000 | LARGE T&R	Yes	NIPDAU	Level-1-260C-UNLIM	-40 to 125	MV358I
LMV358IPWRG4.B	Active	Production	TSSOP (PW) | 8	2000 | LARGE T&R	Yes	NIPDAU	Level-1-260C-UNLIM	-40 to 125	MV358I
LMV358QD	Obsolete	Production	SOIC (D) | 8	-	-	Call TI	Call TI	-40 to 125	MV358Q
LMV358QDDUR	Obsolete	Production	VSSOP (DDU) | 8	-	-	Call TI	Call TI	-40 to 125	RAHR
LMV358QDGKR	Active	Production	VSSOP (DGK) | 8	2500 | LARGE T&R	Yes	NIPDAU | NIPDAUAG	Level-2-260C-1 YEAR	-40 to 125	(RHO, RHR)

Orderable part number	Status (1)	Material type (2)	Package | Pins	Package qty | Carrier	RoHS (3)	Lead finish/ Ball material (4)	MSL rating/ Peak reflow (5)	Op temp (°C)	Part marking (6)
LMV358QDGKR.A	Active	Production	VSSOP (DGK) | 8	2500 | LARGE T&R	Yes	NIPDAUAG	Level-2-260C-1 YEAR	-40 to 125	(RHO, RHR)
LMV358QDGKR.B	Active	Production	VSSOP (DGK) | 8	2500 | LARGE T&R	Yes	NIPDAUAG	Level-2-260C-1 YEAR	-40 to 125	(RHO, RHR)
LMV358QDGKRG4	Active	Production	VSSOP (DGK) | 8	2500 | LARGE T&R	Yes	NIPDAUAG	Level-2-260C-1 YEAR	-40 to 125	(RHO, RHR)
LMV358QDR	Active	Production	SOIC (D) | 8	2500 | LARGE T&R	Yes	NIPDAU	Level-1-260C-UNLIM	-40 to 125	MV358Q
LMV358QDR.A	Active	Production	SOIC (D) | 8	2500 | LARGE T&R	Yes	NIPDAU	Level-1-260C-UNLIM	-40 to 125	MV358Q
LMV358QDR.B	Active	Production	SOIC (D) | 8	2500 | LARGE T&R	Yes	NIPDAU	Level-1-260C-UNLIM	-40 to 125	MV358Q
LMV358QPWR	Active	Production	TSSOP (PW) | 8	2000 | LARGE T&R	Yes	NIPDAU | SN	Level-2-260C-1 YEAR	-40 to 125	MV358Q
LMV358QPWR.A	Active	Production	TSSOP (PW) | 8	2000 | LARGE T&R	Yes	SN	Level-2-260C-1 YEAR	-40 to 125	MV358Q
LMV358QPWR.B	Active	Production	TSSOP (PW) | 8	2000 | LARGE T&R	Yes	SN	Level-2-260C-1 YEAR	-40 to 125	MV358Q

(1) **Status:** For more details on status, see our product life cycle.

(2) **Material type:** When designated, preproduction parts are prototypes/experimental devices, and are not yet approved or released for full production. Testing and final process, including without limitation quality assurance, reliability performance testing, and/or process qualification, may not yet be complete, and this item is subject to further changes or possible discontinuation. If available for ordering, purchases will be subject to an additional waiver at checkout, and are intended for early internal evaluation purposes only. These items are sold without warranties of any kind.

(3) **RoHS values:** Yes, No, RoHS Exempt. See the TI RoHS Statement for additional information and value definition.

(4) **Lead finish/Ball material:** Parts may have multiple material finish options. Finish options are separated by a vertical ruled line. Lead finish/Ball material values may wrap to two lines if the finish value exceeds the maximum column width.

(5) **MSL rating/Peak reflow:** The moisture sensitivity level ratings and peak solder (reflow) temperatures. In the event that a part has multiple moisture sensitivity ratings, only the lowest level per JEDEC standards is shown. Refer to the shipping label for the actual reflow temperature that will be used to mount the part to the printed circuit board.

(6) **Part marking:** There may be an additional marking, which relates to the logo, the lot trace code information, or the environmental category of the part.

Multiple part markings will be inside parentheses. Only one part marking contained in parentheses and separated by a "~" will appear on a part. If a line is indented then it is a continuation of the previous line and the two combined represent the entire part marking for that device.

Important Information and Disclaimer: The information provided on this page represents TI's knowledge and belief as of the date that it is provided. TI bases its knowledge and belief on information provided by third parties, and makes no representation or warranty as to the accuracy of such information. Efforts are underway to better integrate information from third parties. TI has taken and continues to take reasonable steps to provide representative and accurate information but may not have conducted destructive testing or chemical analysis on incoming materials and chemicals. TI and TI suppliers consider certain information to be proprietary, and thus CAS numbers and other limited information may not be available for release.

In no event shall TI's liability arising out of such information exceed the total purchase price of the TI part(s) at issue in this document sold by TI to Customer on an annual basis.

TAPE AND REEL INFORMATION

REEL DIMENSIONS

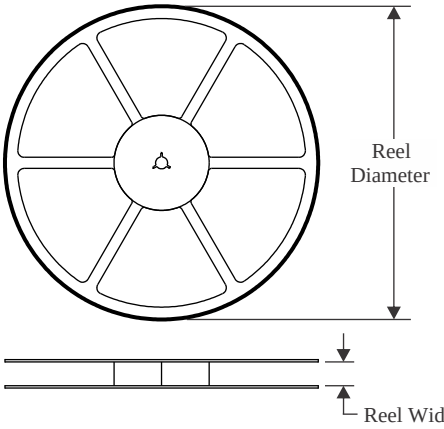

TAPE DIMENSIONS

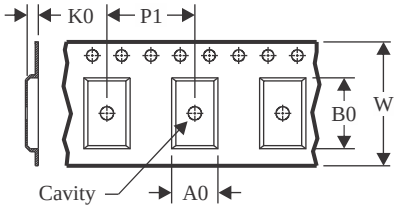

A0	Dimension designed to accommodate the component width
B0	Dimension designed to accommodate the component length
K0	Dimension designed to accommodate the component thickness
W	Overall width of the carrier tape
P1	Pitch between successive cavity centers

QUADRANT ASSIGNMENTS FOR PIN 1 ORIENTATION IN TAPE

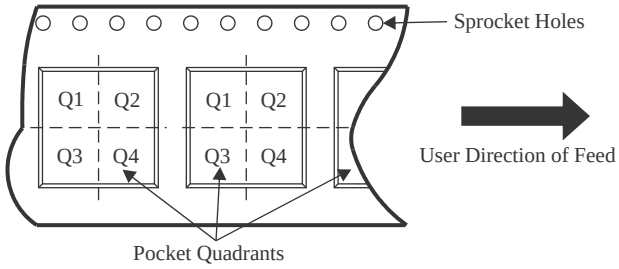

*All dimensions are nominal

Device	Package Type	Package Drawing	Pins	SPQ	Reel Diameter (mm)	Reel Width W1 (mm)	A0 (mm)	B0 (mm)	K0 (mm)	P1 (mm)	W (mm)	Pin1 Quadrant
LMV321IDBVR	SOT-23	DBV	5	3000	180.0	8.4	3.2	3.2	1.4	4.0	8.0	Q3
LMV321IDBVR	SOT-23	DBV	5	3000	180.0	8.4	3.2	3.2	1.4	4.0	8.0	Q3
LMV321IDBVT	SOT-23	DBV	5	250	178.0	9.0	3.23	3.17	1.37	4.0	8.0	Q3
LMV321IDBVT	SOT-23	DBV	5	250	180.0	8.4	3.2	3.2	1.4	4.0	8.0	Q3
LMV321IDCKR	SC70	DCK	5	3000	178.0	8.4	2.25	2.45	1.2	4.0	8.0	Q3
LMV321IDCKT	SC70	DCK	5	250	180.0	8.4	2.3	2.55	1.2	4.0	8.0	Q3
LMV324IDR	SOIC	D	14	2500	330.0	16.4	6.5	9.0	2.1	8.0	16.0	Q1
LMV324IDRG4	SOIC	D	14	2500	330.0	16.4	6.5	9.0	2.1	8.0	16.0	Q1
LMV324IPWR	TSSOP	PW	14	2000	330.0	12.4	6.9	5.6	1.6	8.0	12.0	Q1
LMV324IPWR	TSSOP	PW	14	2000	330.0	12.4	6.9	5.3	1.6	8.0	12.0	Q1
LMV324IPWR	TSSOP	PW	14	2000	330.0	12.4	6.9	5.6	1.6	8.0	12.0	Q1
LMV324IPWRG4	TSSOP	PW	14	2000	330.0	12.4	6.9	5.6	1.6	8.0	12.0	Q1
LMV324IPWRG4	TSSOP	PW	14	2000	330.0	12.4	6.9	5.3	1.6	8.0	12.0	Q1
LMV324QDR	SOIC	D	14	2500	330.0	16.4	6.5	9.0	2.1	8.0	16.0	Q1
LMV324QPWR	TSSOP	PW	14	2000	330.0	12.4	6.9	5.6	1.6	8.0	12.0	Q1
LMV324QPWR	TSSOP	PW	14	2000	330.0	12.4	6.9	5.6	1.6	8.0	12.0	Q1

Device	Package Type	Package Drawing	Pins	SPQ	Reel Diameter (mm)	Reel Width W1 (mm)	A0 (mm)	B0 (mm)	K0 (mm)	P1 (mm)	W (mm)	Pin1 Quadrant
LMV324QPWRE4	TSSOP	PW	14	2000	330.0	12.4	6.9	5.6	1.6	8.0	12.0	Q1
LMV358IDGKR	VSSOP	DGK	8	2500	330.0	12.4	5.3	3.4	1.4	8.0	12.0	Q1
LMV358IDGKR	VSSOP	DGK	8	2500	330.0	12.4	5.3	3.4	1.4	8.0	12.0	Q1
LMV358IDGKR	VSSOP	DGK	8	2500	330.0	12.4	5.3	3.3	1.3	8.0	12.0	Q1
LMV358IDR	SOIC	D	8	2500	330.0	12.4	6.4	5.2	2.1	8.0	12.0	Q1
LMV358IDRG4	SOIC	D	8	2500	330.0	12.4	6.4	5.2	2.1	8.0	12.0	Q1
LMV358IPWR	TSSOP	PW	8	2000	330.0	12.4	7.0	3.6	1.6	8.0	12.0	Q1
LMV358IPWRG4	TSSOP	PW	8	2000	330.0	12.4	7.0	3.6	1.6	8.0	12.0	Q1
LMV358QDGKR	VSSOP	DGK	8	2500	330.0	12.4	5.3	3.4	1.4	8.0	12.0	Q1
LMV358QDGKR	VSSOP	DGK	8	2500	330.0	12.4	5.3	3.4	1.4	8.0	12.0	Q1
LMV358QDGKR	VSSOP	DGK	8	2500	330.0	12.4	5.3	3.3	1.3	8.0	12.0	Q1
LMV358QDR	SOIC	D	8	2500	330.0	12.4	6.4	5.2	2.1	8.0	12.0	Q1
LMV358QPWR	TSSOP	PW	8	2000	330.0	12.4	7.0	3.6	1.6	8.0	12.0	Q1

TAPE AND REEL BOX DIMENSIONS

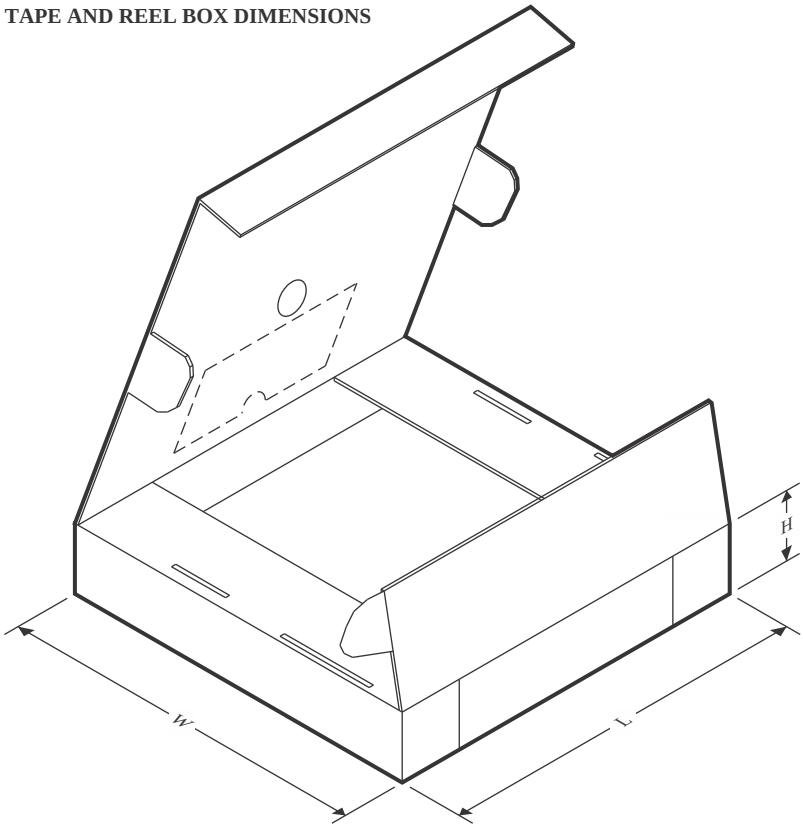

*All dimensions are nominal

Device	Package Type	Package Drawing	Pins	SPQ	Length (mm)	Width (mm)	Height (mm)
LMV321IDBVR	SOT-23	DBV	5	3000	210.0	185.0	35.0
LMV321IDBVR	SOT-23	DBV	5	3000	210.0	185.0	35.0
LMV321IDBVT	SOT-23	DBV	5	250	180.0	180.0	18.0
LMV321IDBVT	SOT-23	DBV	5	250	210.0	185.0	35.0
LMV321IDCKR	SC70	DCK	5	3000	208.0	191.0	35.0
LMV321IDCKT	SC70	DCK	5	250	210.0	185.0	35.0
LMV324IDR	SOIC	D	14	2500	353.0	353.0	32.0
LMV324IDRG4	SOIC	D	14	2500	353.0	353.0	32.0
LMV324IPWR	TSSOP	PW	14	2000	356.0	356.0	35.0
LMV324IPWR	TSSOP	PW	14	2000	367.0	367.0	35.0
LMV324IPWR	TSSOP	PW	14	2000	353.0	353.0	32.0
LMV324IPWRG4	TSSOP	PW	14	2000	353.0	353.0	32.0
LMV324IPWRG4	TSSOP	PW	14	2000	367.0	367.0	35.0
LMV324QDR	SOIC	D	14	2500	353.0	353.0	32.0
LMV324QPWR	TSSOP	PW	14	2000	366.0	364.0	50.0
LMV324QPWR	TSSOP	PW	14	2000	353.0	353.0	32.0
LMV324QPWRE4	TSSOP	PW	14	2000	353.0	353.0	32.0
LMV358IDGKR	VSSOP	DGK	8	2500	358.0	335.0	35.0

Device	Package Type	Package Drawing	Pins	SPQ	Length (mm)	Width (mm)	Height (mm)
LMV358IDGKR	VSSOP	DGK	8	2500	366.0	364.0	50.0
LMV358IDGKR	VSSOP	DGK	8	2500	370.0	355.0	55.0
LMV358IDR	SOIC	D	8	2500	353.0	353.0	32.0
LMV358IDRG4	SOIC	D	8	2500	353.0	353.0	32.0
LMV358IPWR	TSSOP	PW	8	2000	353.0	353.0	32.0
LMV358IPWRG4	TSSOP	PW	8	2000	353.0	353.0	32.0
LMV358QDGKR	VSSOP	DGK	8	2500	358.0	335.0	35.0
LMV358QDGKR	VSSOP	DGK	8	2500	366.0	364.0	50.0
LMV358QDGKR	VSSOP	DGK	8	2500	370.0	355.0	55.0
LMV358QDR	SOIC	D	8	2500	340.5	338.1	20.6
LMV358QPWR	TSSOP	PW	8	2000	366.0	364.0	50.0

PACKAGE OUTLINE

DBV0005A

SOT-23 - 1.45 mm max height

SMALL OUTLINE TRANSISTOR

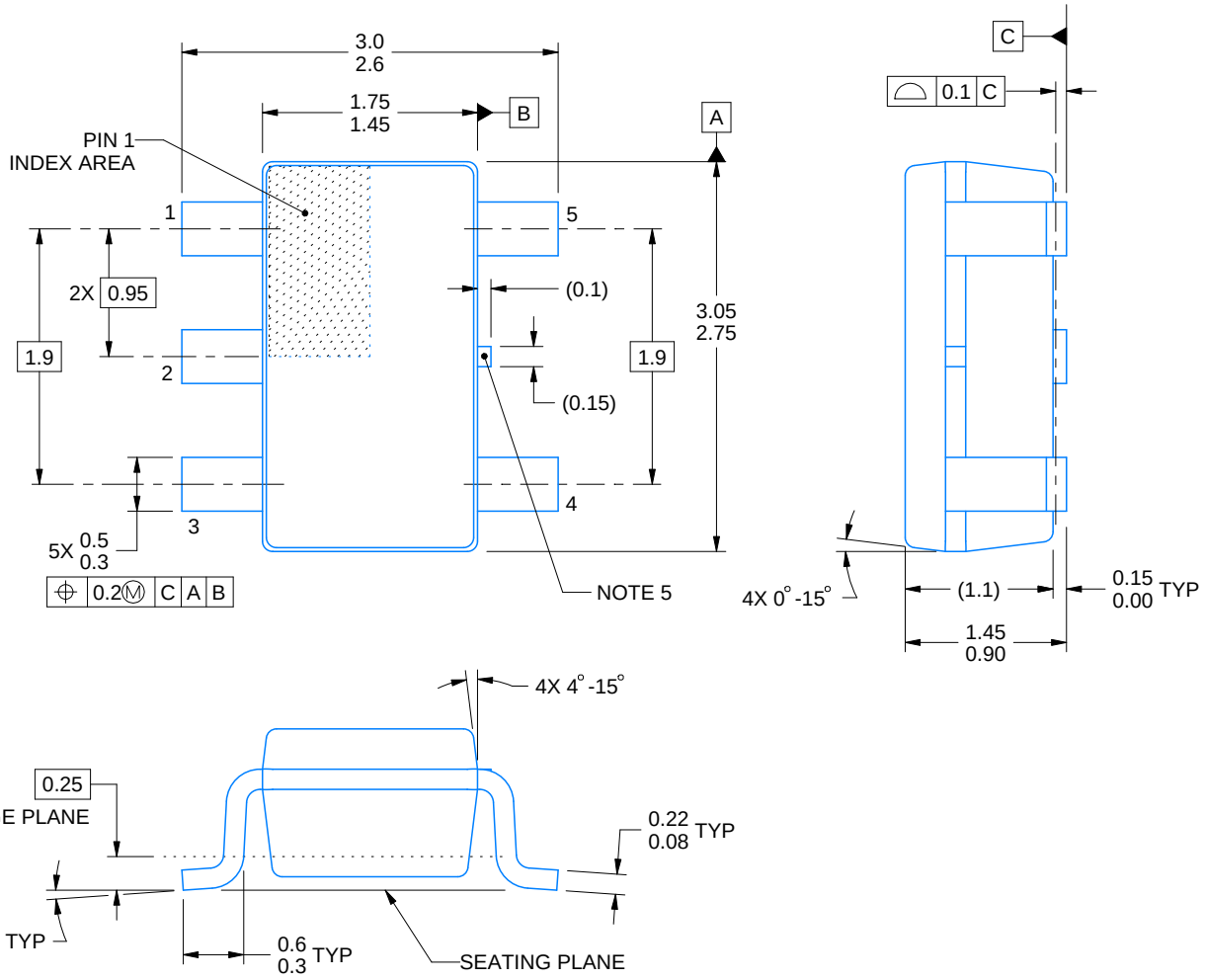

4214839/K 08/2024

NOTES:

1. All linear dimensions are in millimeters. Any dimensions in parenthesis are for reference only. Dimensioning and tolerancing per ASME Y14.5M.
2. This drawing is subject to change without notice.
3. Refernce JEDEC MO-178.
4. Body dimensions do not include mold flash, protrusions, or gate burrs. Mold flash, protrusions, or gate burrs shall not exceed 0.25 mm per side.
5. Support pin may differ or may not be present.

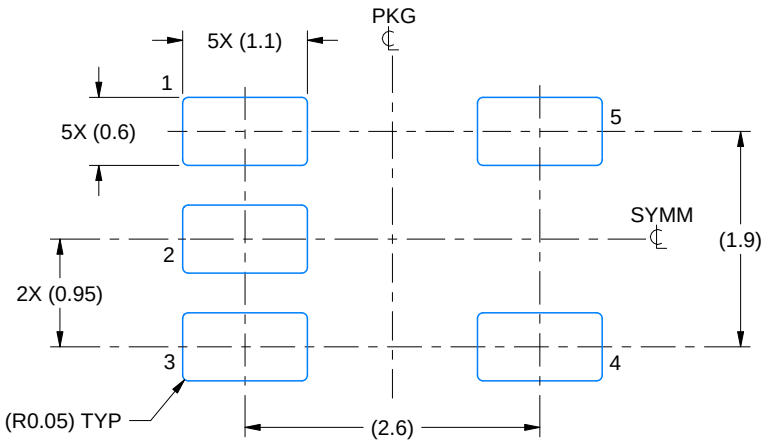

LAND PATTERN EXAMPLE
EXPOSED METAL SHOWN
SCALE:15X

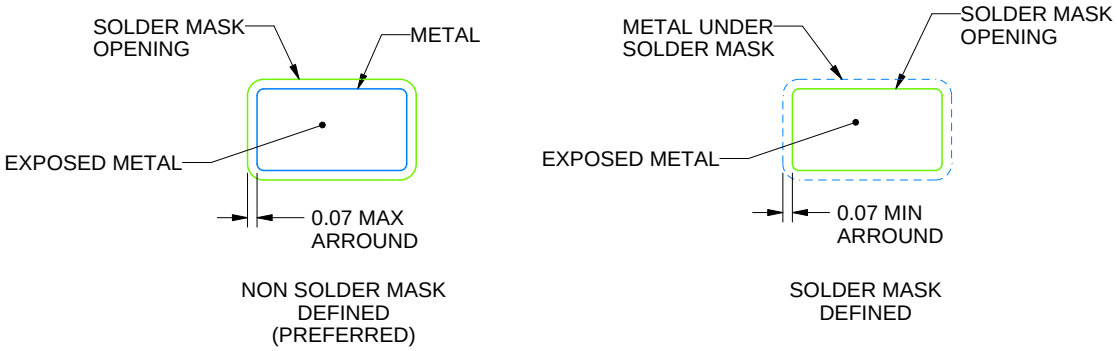

SOLDER MASK DETAILS

4214839/K 08/2024

NOTES: (continued)

6. Publication IPC-7351 may have alternate designs.
7. Solder mask tolerances between and around signal pads can vary based on board fabrication site.

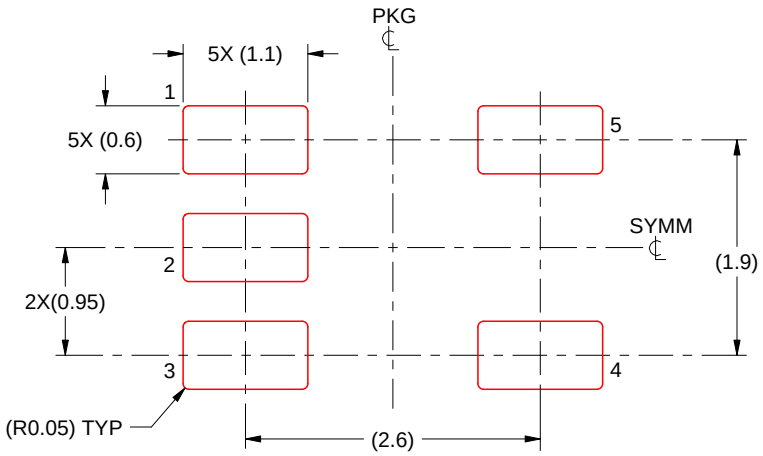

SOLDER PASTE EXAMPLE
BASED ON 0.125 mm THICK STENCIL
SCALE:15X

4214839/K 08/2024

NOTES: (continued)

8. Laser cutting apertures with trapezoidal walls and rounded corners may offer better paste release. IPC-7525 may have alternate design recommendations.
9. Board assembly site may have different recommendations for stencil design.

PACKAGE OUTLINE

DGK0008A

VSSOP - 1.1 mm max height

SMALL OUTLINE PACKAGE

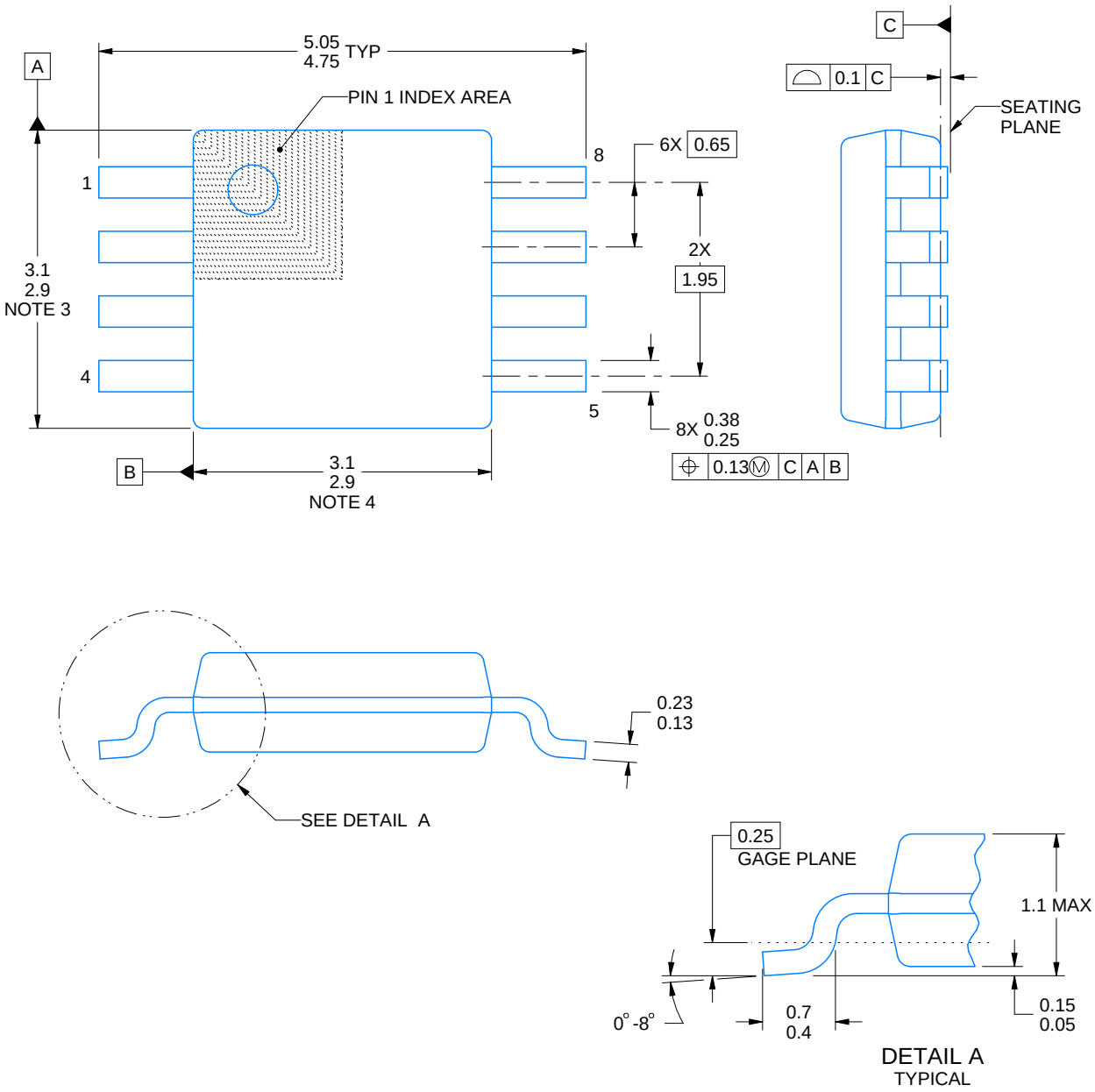

PowerPAD is a trademark of Texas Instruments.

NOTES:

1. All linear dimensions are in millimeters. Any dimensions in parenthesis are for reference only. Dimensioning and tolerancing per ASME Y14.5M.
2. This drawing is subject to change without notice.
3. This dimension does not include mold flash, protrusions, or gate burrs. Mold flash, protrusions, or gate burrs shall not exceed 0.15 mm per side.
4. This dimension does not include interlead flash. Interlead flash shall not exceed 0.25 mm per side.
5. Reference JEDEC registration MO-187.

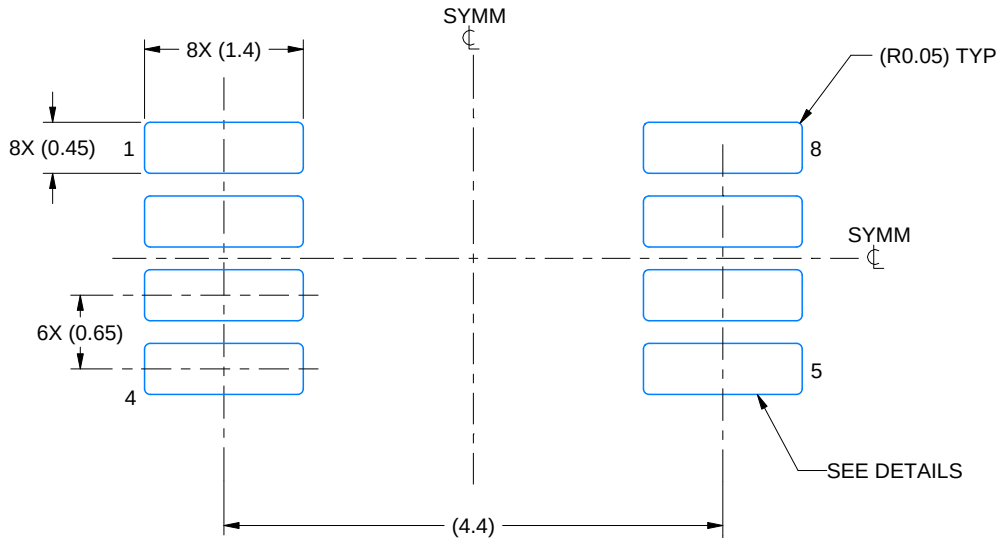

LAND PATTERN EXAMPLE
EXPOSED METAL SHOWN
SCALE: 15X

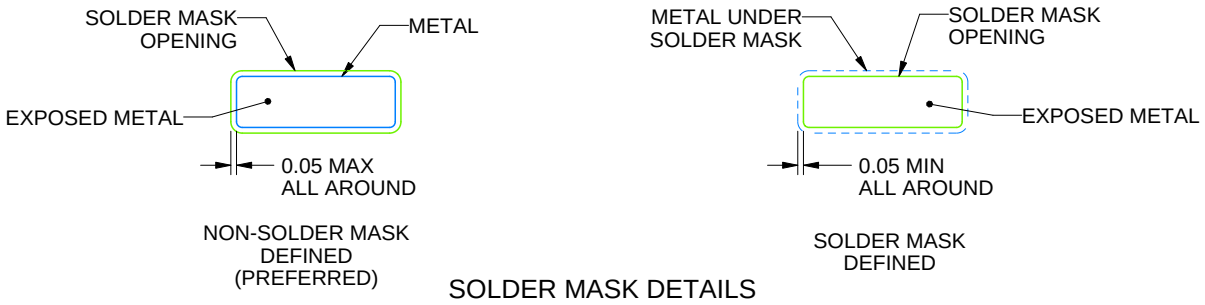

SOLDER MASK DETAILS

4214862/A 04/2023

NOTES: (continued)

6. Publication IPC-7351 may have alternate designs.
7. Solder mask tolerances between and around signal pads can vary based on board fabrication site.
8. Vias are optional depending on application, refer to device data sheet. If any vias are implemented, refer to their locations shown on this view. It is recommended that vias under paste be filled, plugged or tented.
9. Size of metal pad may vary due to creepage requirement.

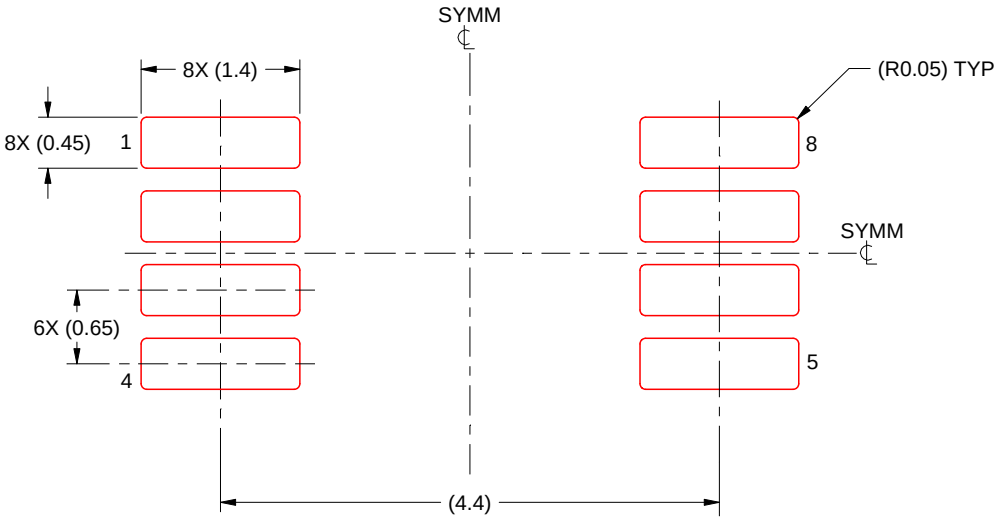

SOLDER PASTE EXAMPLE
SCALE: 15X

4214862/A 04/2023

NOTES: (continued)

11. Laser cutting apertures with trapezoidal walls and rounded corners may offer better paste release. IPC-7525 may have alternate design recommendations.
12. Board assembly site may have different recommendations for stencil design.

DDU (R–PDSO–G8) PLASTIC SMALL–OUTLINE PACKAGE

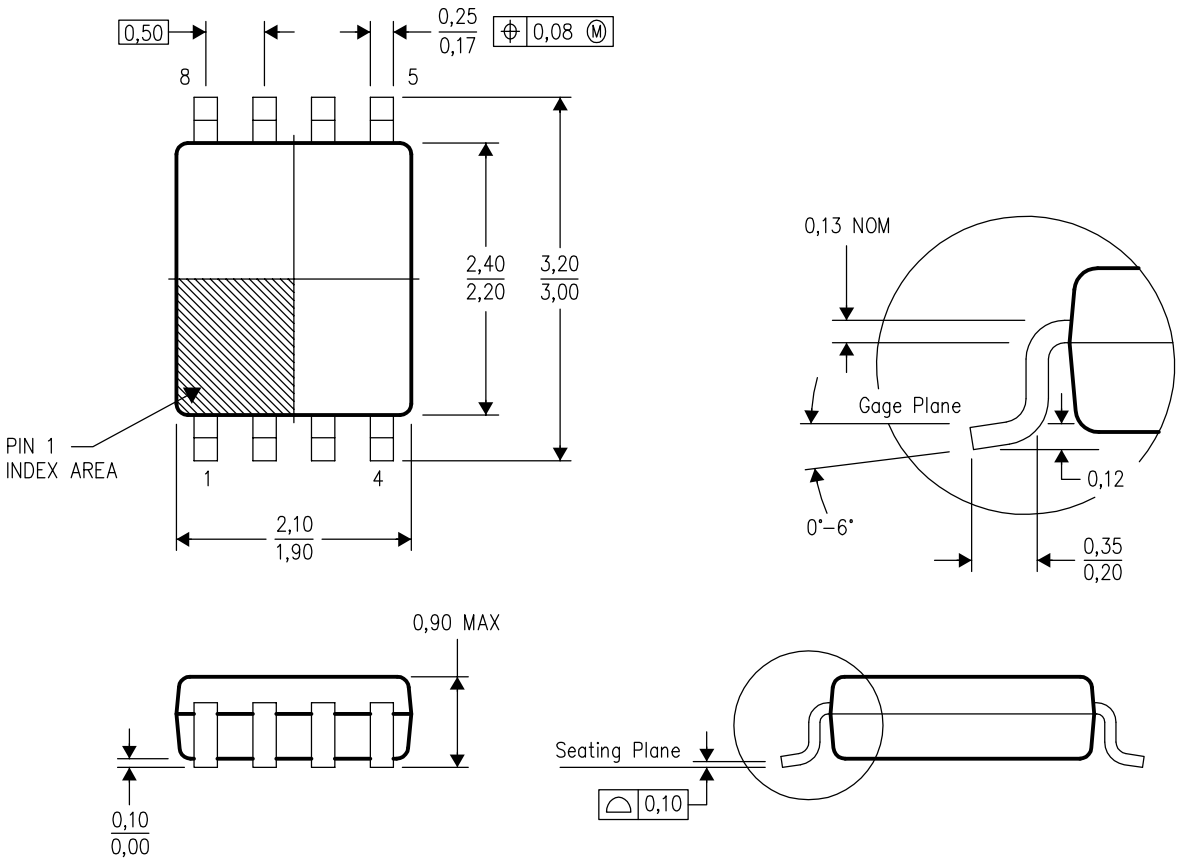

4205140/A 05/03

NOTES:
A. All linear dimensions are in millimeters.
B. This drawing is subject to change without notice.
C. Body dimensions do not include mold flash or protrusion.
D. Falls within JEDEC MO–187 variation CA.

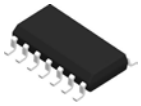

PACKAGE OUTLINE

D0014A

SOIC - 1.75 mm max height

SMALL OUTLINE INTEGRATED CIRCUIT

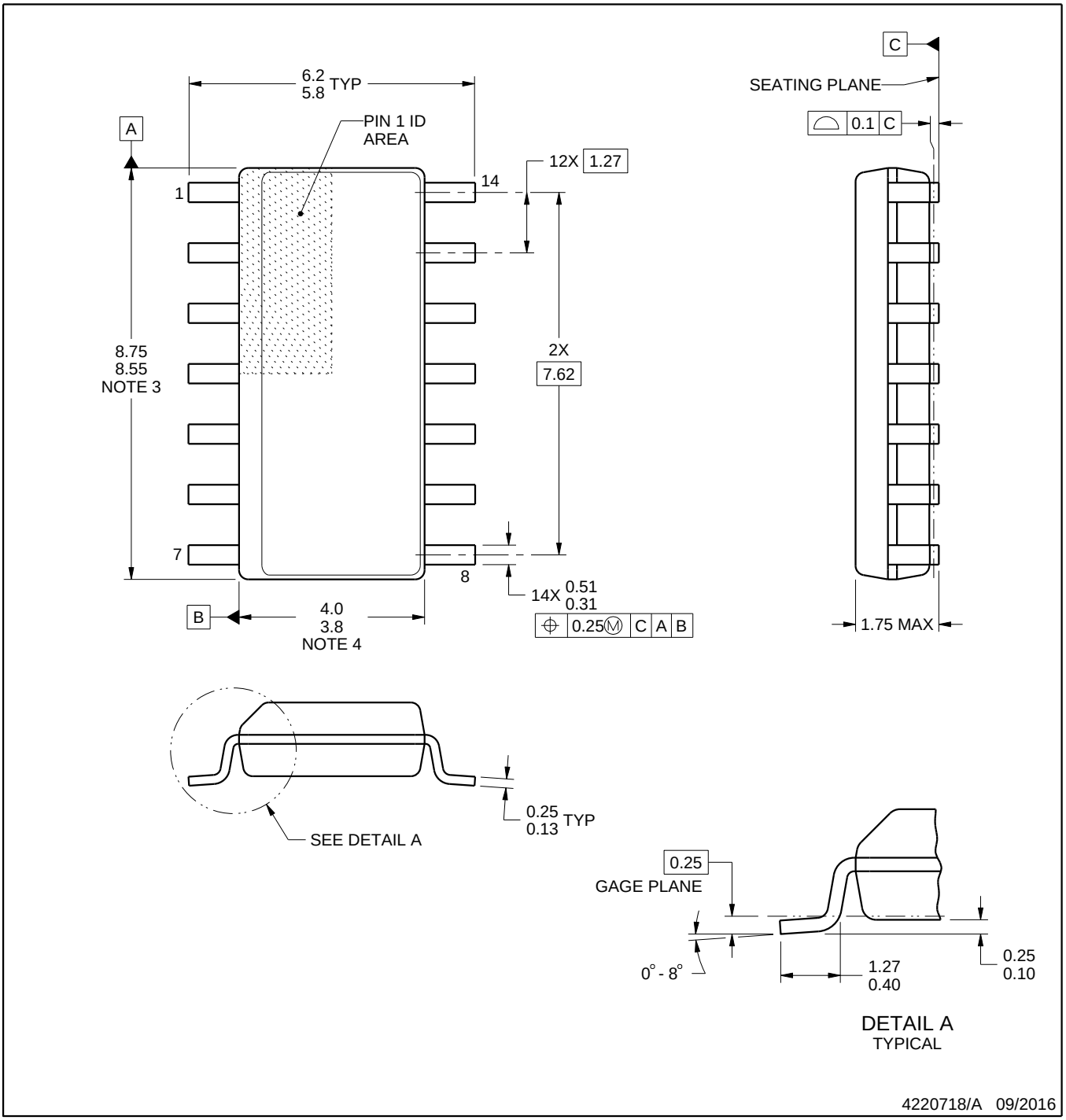

NOTES:

1. All linear dimensions are in millimeters. Dimensions in parenthesis are for reference only. Dimensioning and tolerancing per ASME Y14.5M.
2. This drawing is subject to change without notice.
3. This dimension does not include mold flash, protrusions, or gate burrs. Mold flash, protrusions, or gate burrs shall not exceed 0.15 mm, per side.
4. This dimension does not include interlead flash. Interlead flash shall not exceed 0.43 mm, per side.
5. Reference JEDEC registration MS-012, variation AB.

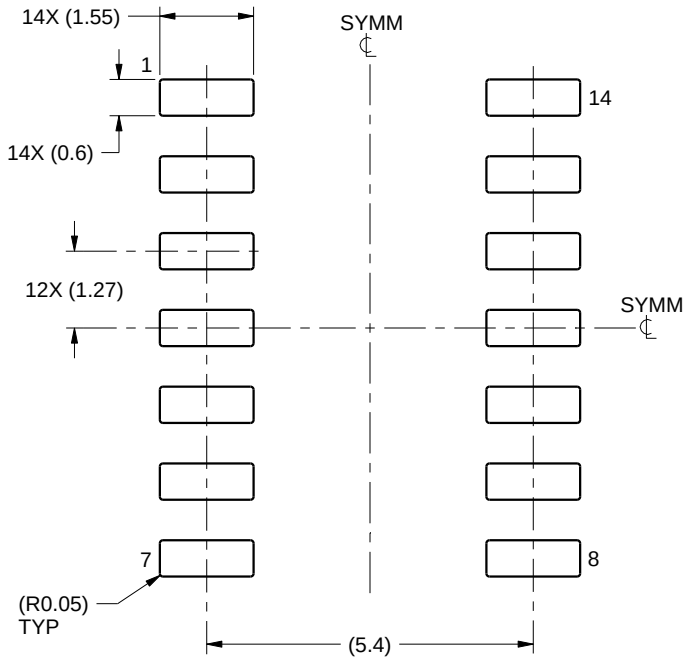

LAND PATTERN EXAMPLE
SCALE:8X

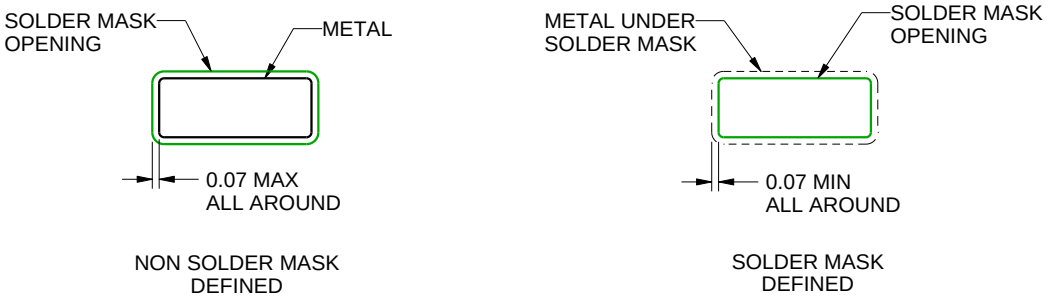

SOLDER MASK DETAILS

4220718/A 09/2016

NOTES: (continued)

6. Publication IPC-7351 may have alternate designs.
7. Solder mask tolerances between and around signal pads can vary based on board fabrication site.

EXAMPLE STENCIL DESIGN

D0014A

SOIC - 1.75 mm max height

SMALL OUTLINE INTEGRATED CIRCUIT

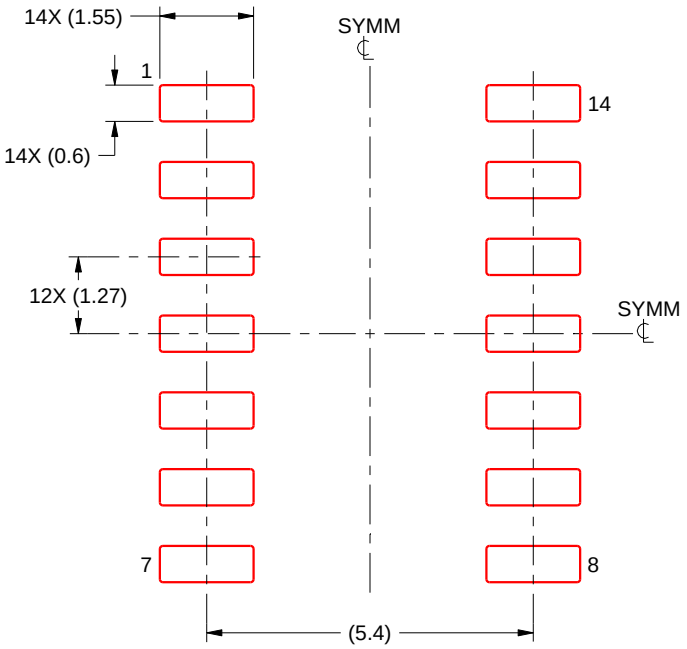

SOLDER PASTE EXAMPLE
BASED ON 0.125 mm THICK STENCIL
SCALE:8X

4220718/A 09/2016

NOTES: (continued)

8. Laser cutting apertures with trapezoidal walls and rounded corners may offer better paste release. IPC-7525 may have alternate design recommendations.
9. Board assembly site may have different recommendations for stencil design.

PACKAGE OUTLINE

DCK0005A

SOT - 1.1 max height

SMALL OUTLINE TRANSISTOR

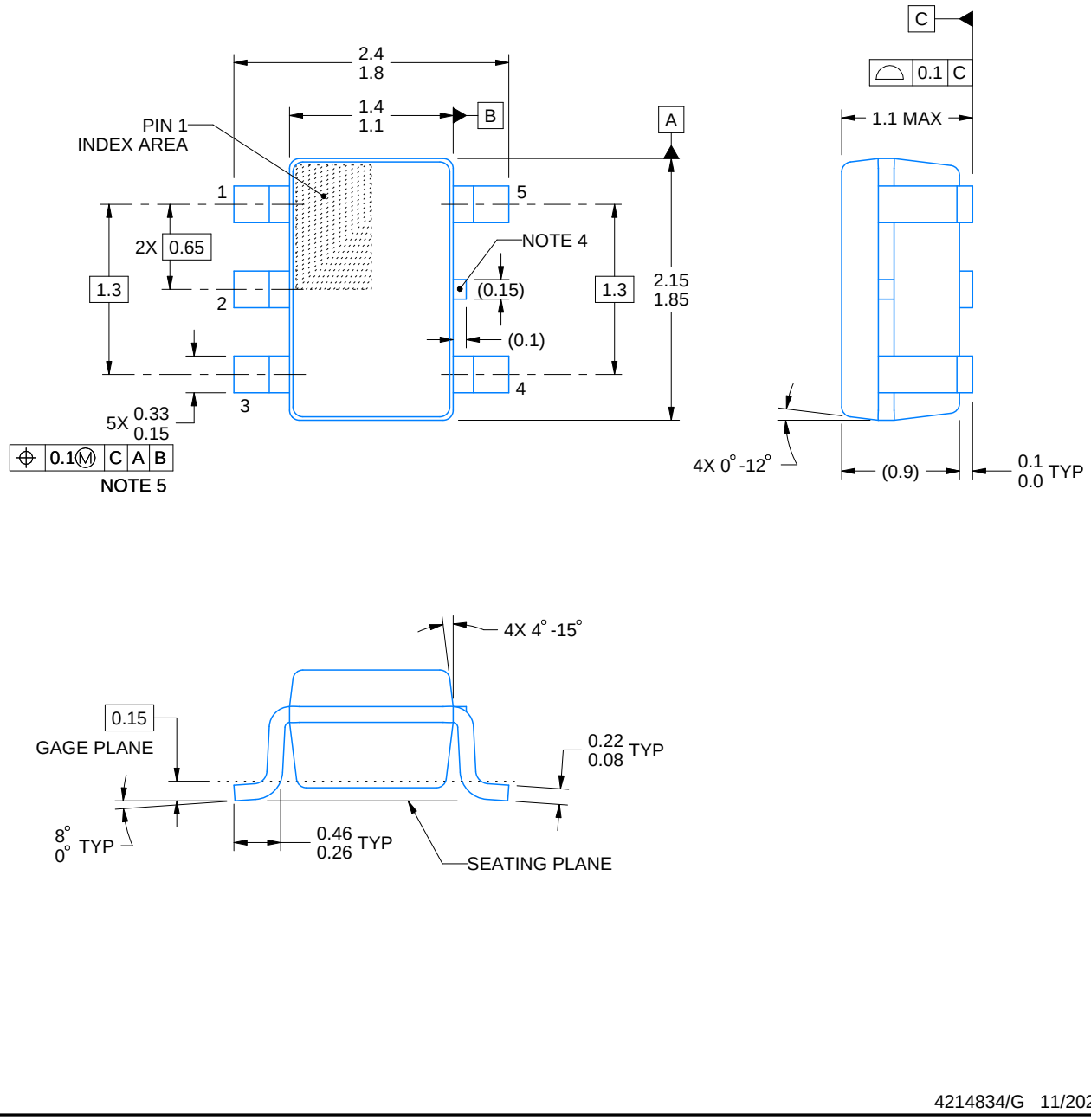

4214834/G 11/2024

NOTES:

1. All linear dimensions are in millimeters. Any dimensions in parenthesis are for reference only. Dimensioning and tolerancing per ASME Y14.5M.
2. This drawing is subject to change without notice.
3. Refernce JEDEC MO-203.
4. Support pin may differ or may not be present.
5. Lead width does not comply with JEDEC.
6. Body dimensions do not include mold flash, protrusions, or gate burrs. Mold flash, protrusions, or gate burrs shall not exceed 0.25mm per side

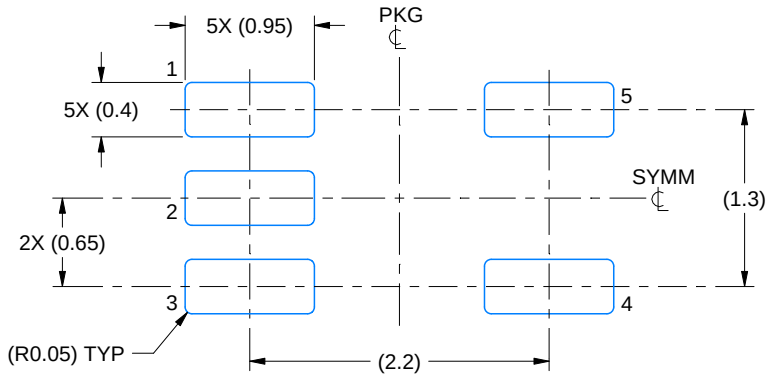

LAND PATTERN EXAMPLE
EXPOSED METAL SHOWN
SCALE:18X

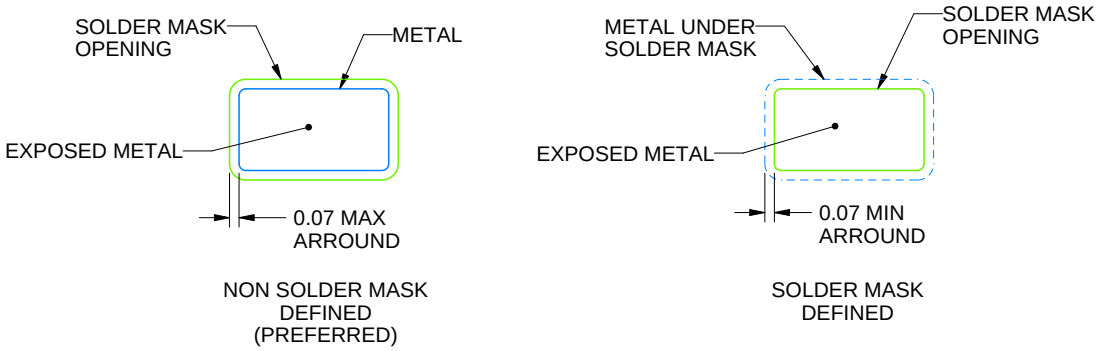

SOLDER MASK DETAILS

4214834/G 11/2024

NOTES: (continued)

7. Publication IPC-7351 may have alternate designs.
8. Solder mask tolerances between and around signal pads can vary based on board fabrication site.

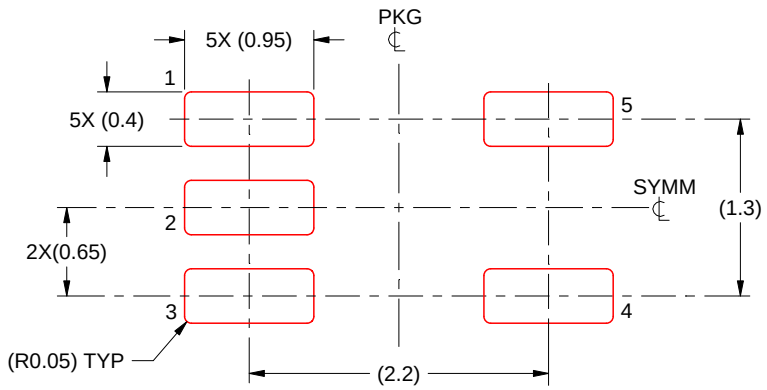

SOLDER PASTE EXAMPLE
BASED ON 0.125 THICK STENCIL
SCALE:18X

4214834/G 11/2024

NOTES: (continued)

9. Laser cutting apertures with trapezoidal walls and rounded corners may offer better paste release. IPC-7525 may have alternate design recommendations.
10. Board assembly site may have different recommendations for stencil design.

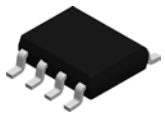

PACKAGE OUTLINE

D0008A

SOIC - 1.75 mm max height

SMALL OUTLINE INTEGRATED CIRCUIT

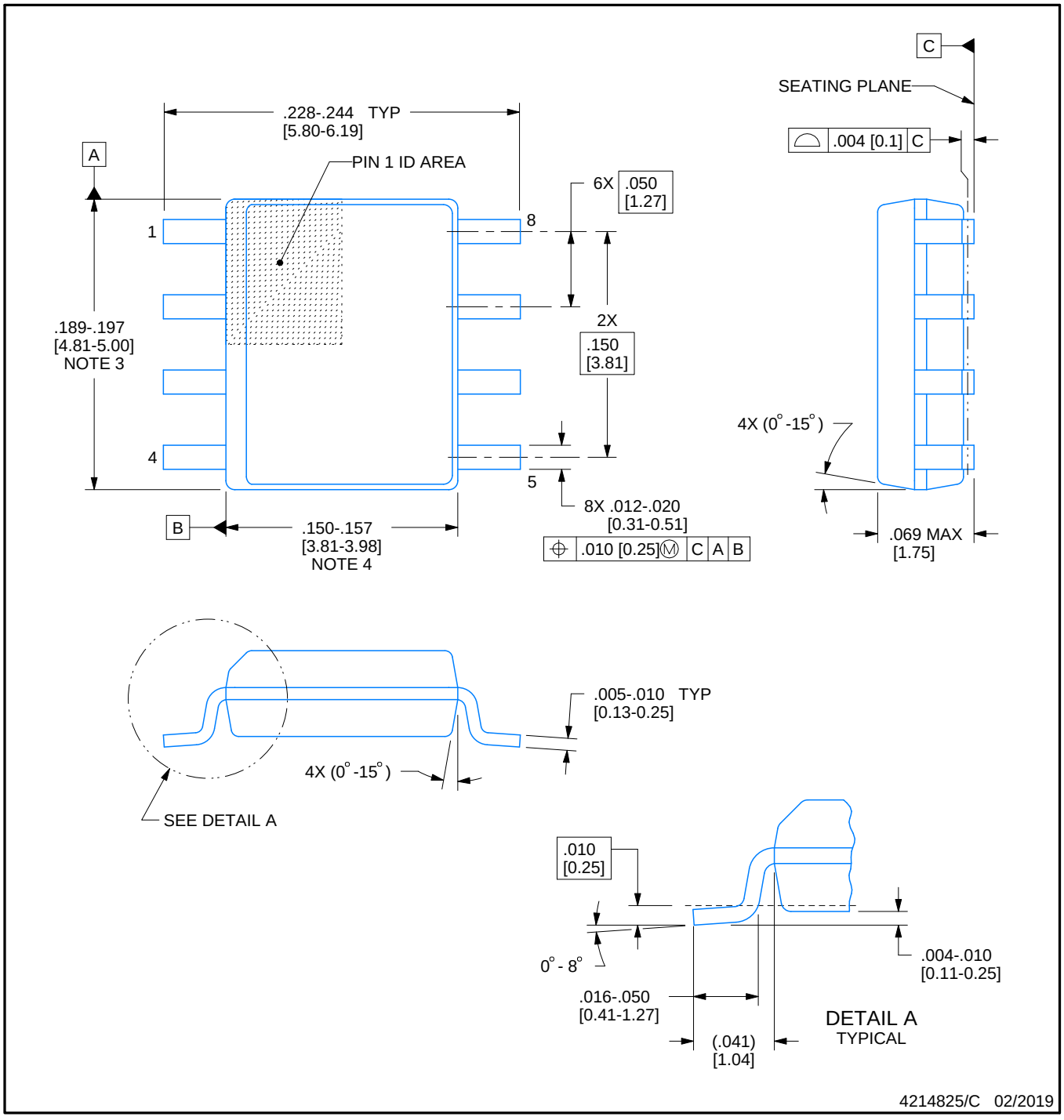

NOTES:

1. Linear dimensions are in inches [millimeters]. Dimensions in parenthesis are for reference only. Controlling dimensions are in inches. Dimensioning and tolerancing per ASME Y14.5M.
2. This drawing is subject to change without notice.
3. This dimension does not include mold flash, protrusions, or gate burrs. Mold flash, protrusions, or gate burrs shall not exceed .006 [0.15] per side.
4. This dimension does not include interlead flash.
5. Reference JEDEC registration MS-012, variation AA.

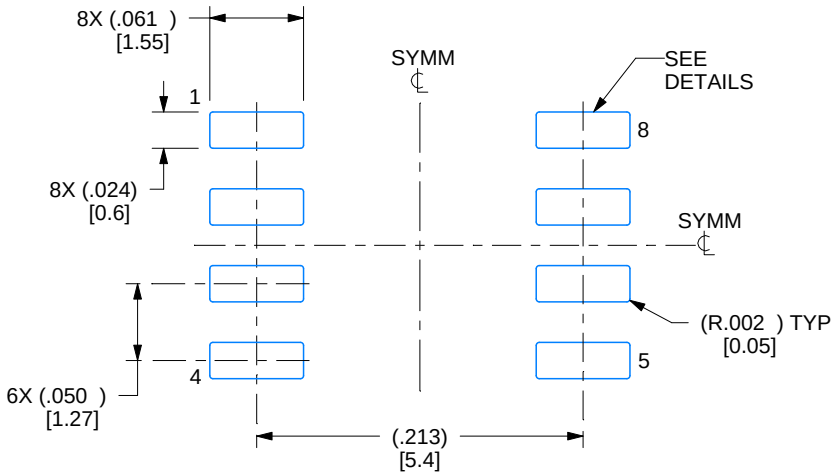

LAND PATTERN EXAMPLE
EXPOSED METAL SHOWN
SCALE:8X

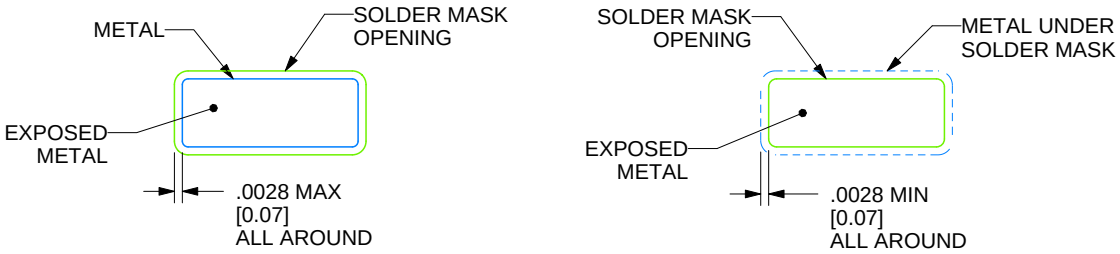

SOLDER MASK DETAILS

4214825/C 02/2019

NOTES: (continued)

6. Publication IPC-7351 may have alternate designs.
7. Solder mask tolerances between and around signal pads can vary based on board fabrication site.

EXAMPLE STENCIL DESIGN

D0008A

SOIC - 1.75 mm max height

SMALL OUTLINE INTEGRATED CIRCUIT

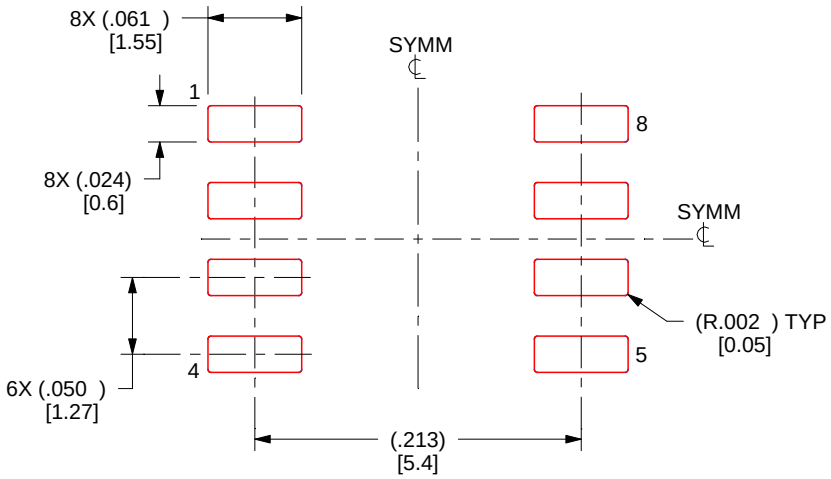

SOLDER PASTE EXAMPLE
BASED ON .005 INCH [0.125 MM] THICK STENCIL
SCALE:8X

4214825/C 02/2019

NOTES: (continued)

8. Laser cutting apertures with trapezoidal walls and rounded corners may offer better paste release. IPC-7525 may have alternate design recommendations.
9. Board assembly site may have different recommendations for stencil design.

PACKAGE OUTLINE

PW0014A

TSSOP - 1.2 mm max height

SMALL OUTLINE PACKAGE

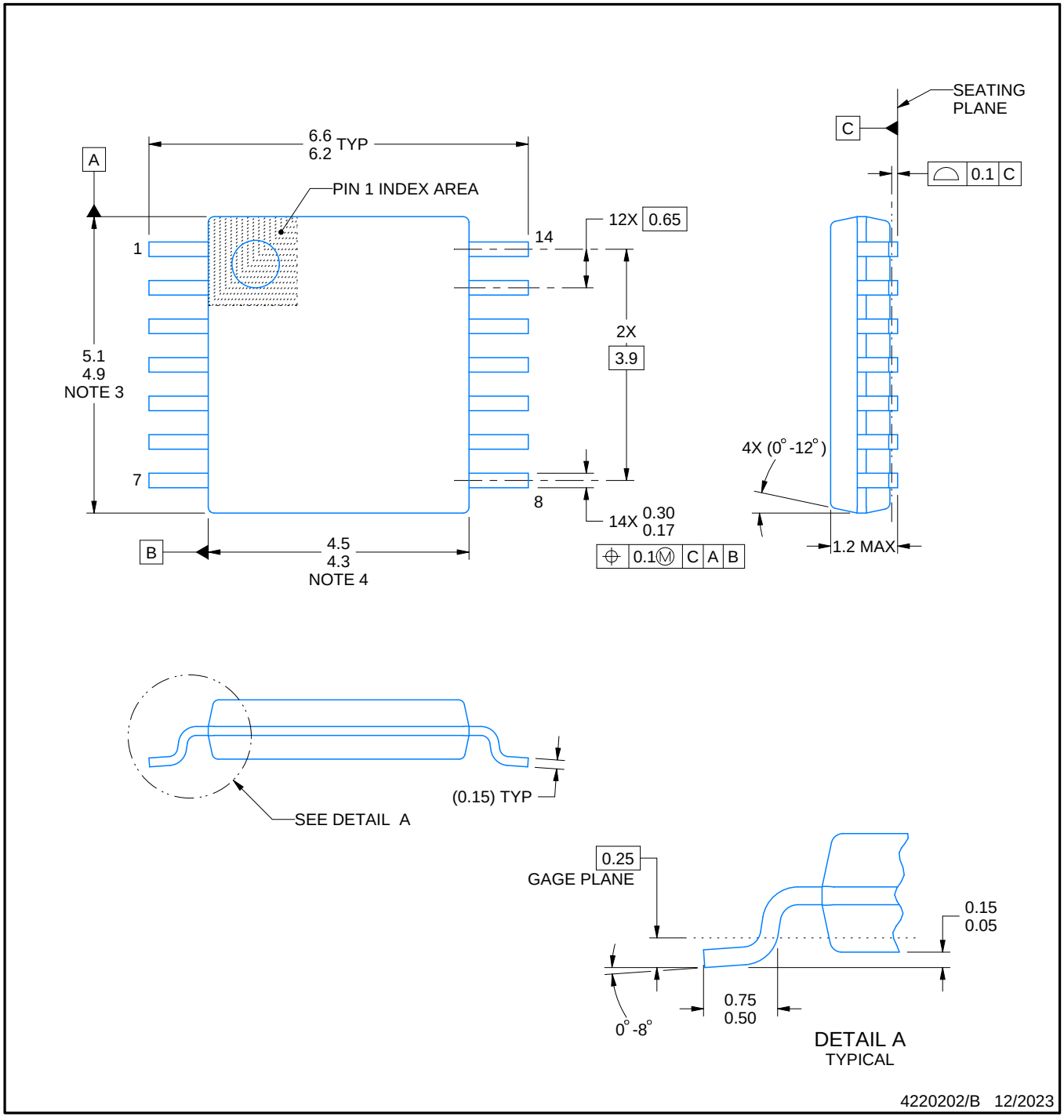

NOTES:

1. All linear dimensions are in millimeters. Any dimensions in parenthesis are for reference only. Dimensioning and tolerancing per ASME Y14.5M.
2. This drawing is subject to change without notice.
3. This dimension does not include mold flash, protrusions, or gate burrs. Mold flash, protrusions, or gate burrs shall not exceed 0.15 mm per side.
4. This dimension does not include interlead flash. Interlead flash shall not exceed 0.25 mm per side.
5. Reference JEDEC registration MO-153.

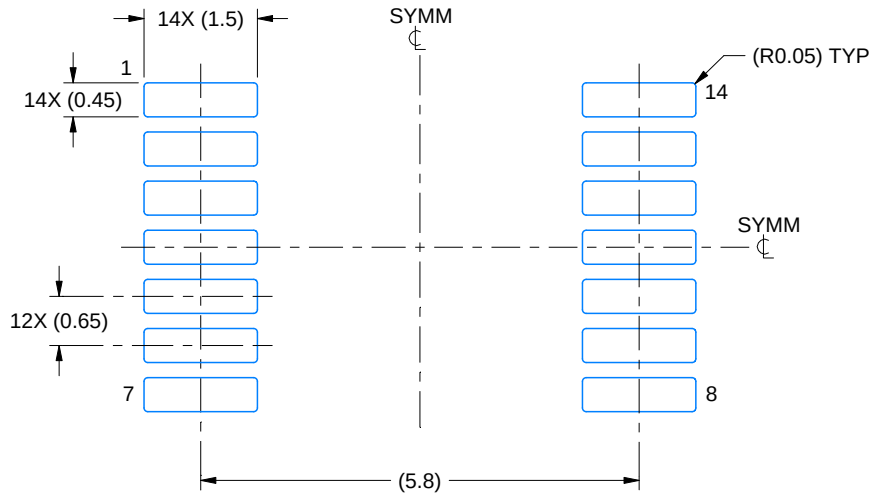

LAND PATTERN EXAMPLE
EXPOSED METAL SHOWN
SCALE: 10X

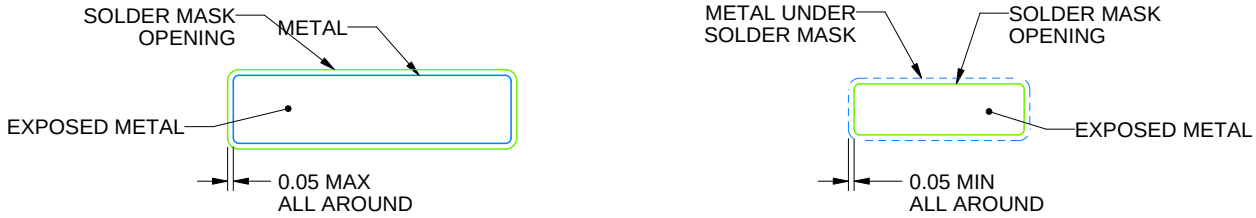

SOLDER MASK DETAILS

4220202/B 12/2023

NOTES: (continued)

6. Publication IPC-7351 may have alternate designs.
7. Solder mask tolerances between and around signal pads can vary based on board fabrication site.

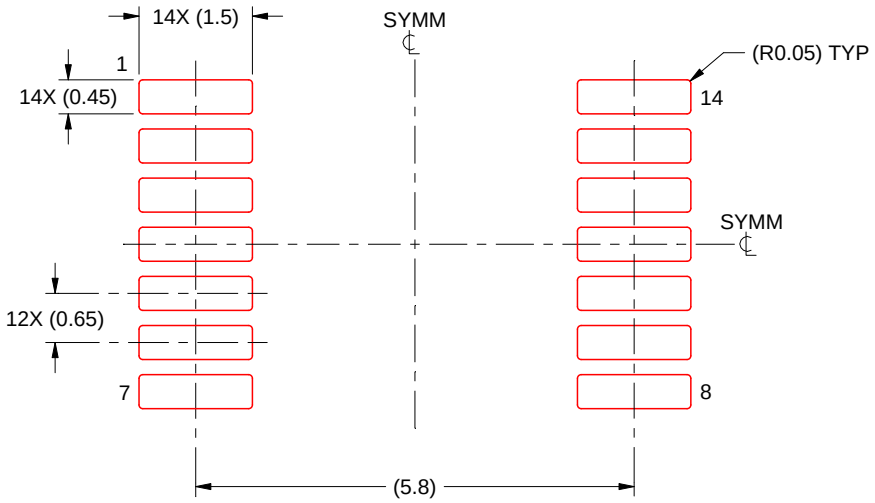

SOLDER PASTE EXAMPLE
BASED ON 0.125 mm THICK STENCIL
SCALE: 10X

4220202/B 12/2023

NOTES: (continued)

8. Laser cutting apertures with trapezoidal walls and rounded corners may offer better paste release. IPC-7525 may have alternate design recommendations.
9. Board assembly site may have different recommendations for stencil design.

PACKAGE OUTLINE

PW0008A

TSSOP - 1.2 mm max height

SMALL OUTLINE PACKAGE

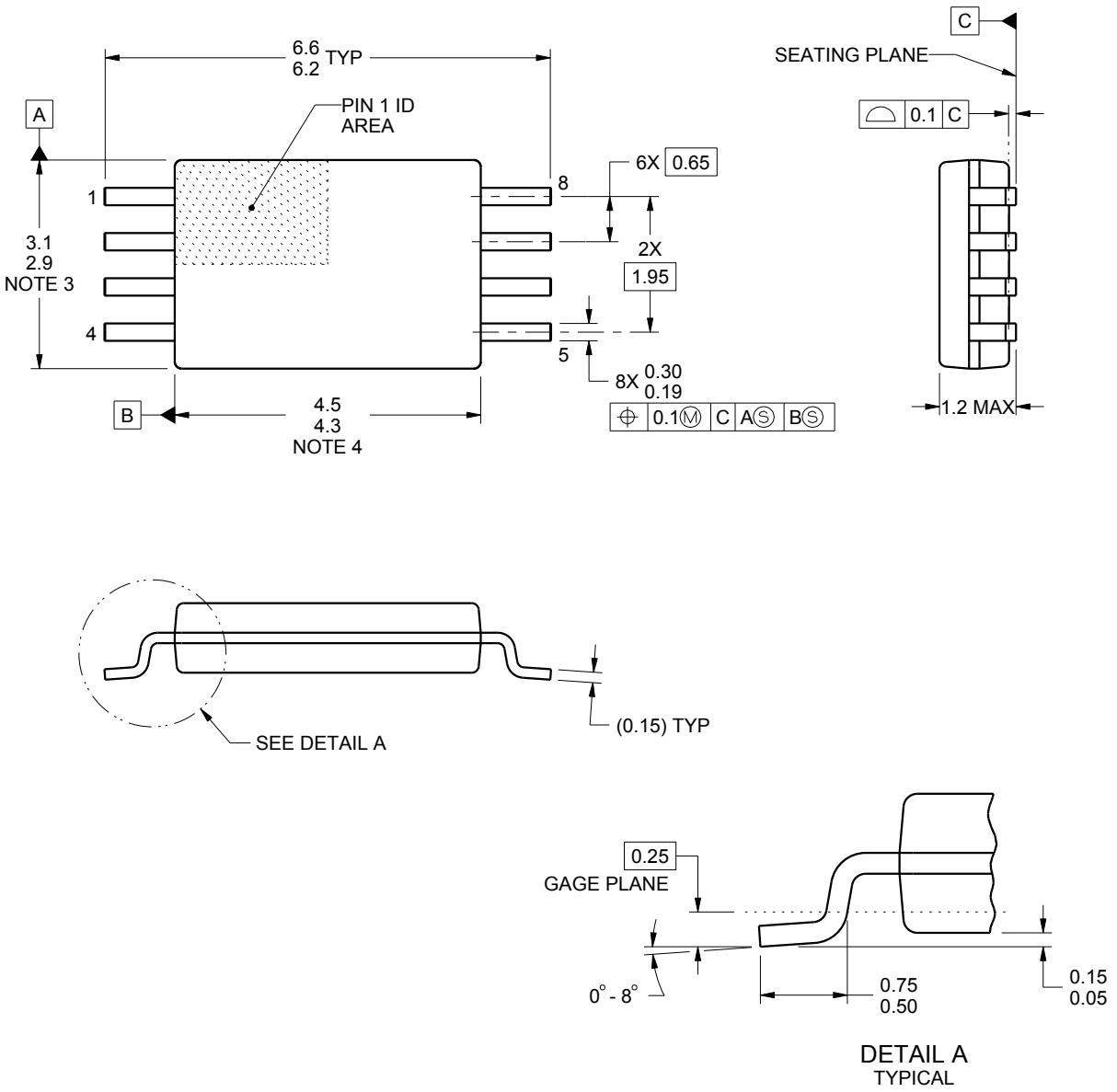

NOTES:

1. All linear dimensions are in millimeters. Any dimensions in parenthesis are for reference only. Dimensioning and tolerancing per ASME Y14.5M.
2. This drawing is subject to change without notice.
3. This dimension does not include mold flash, protrusions, or gate burrs. Mold flash, protrusions, or gate burrs shall not exceed 0.15 mm per side.
4. This dimension does not include interlead flash. Interlead flash shall not exceed 0.25 mm per side.
5. Reference JEDEC registration MO-153, variation AA.

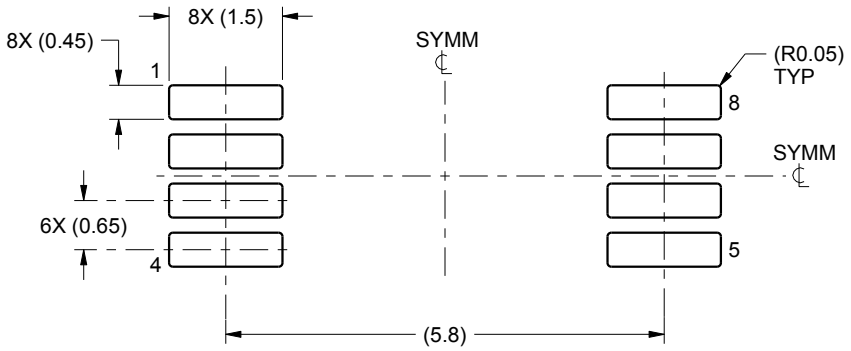

LAND PATTERN EXAMPLE
SCALE:10X

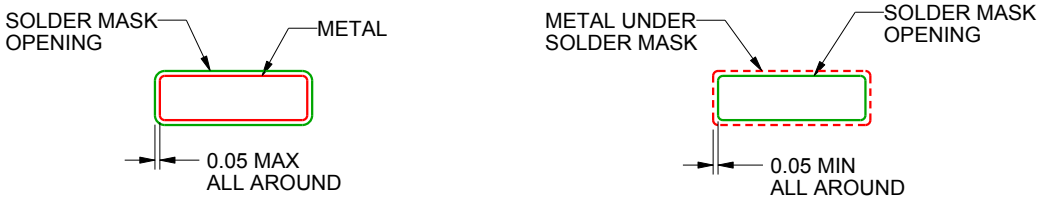

SOLDER MASK DETAILS
NOT TO SCALE

4221848/A 02/2015

NOTES: (continued)

6. Publication IPC-7351 may have alternate designs.
7. Solder mask tolerances between and around signal pads can vary based on board fabrication site.

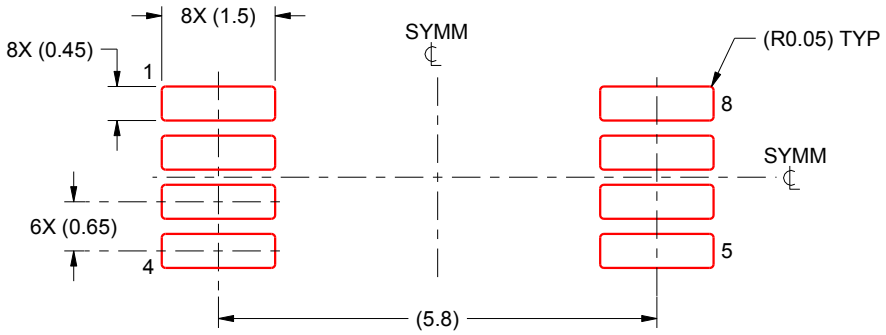

SOLDER PASTE EXAMPLE
BASED ON 0.125 mm THICK STENCIL
SCALE:10X

4221848/A 02/2015

NOTES: (continued)

8. Laser cutting apertures with trapezoidal walls and rounded corners may offer better paste release. IPC-7525 may have alternate design recommendations.
9. Board assembly site may have different recommendations for stencil design.

IMPORTANT NOTICE AND DISCLAIMER

TI PROVIDES TECHNICAL AND RELIABILITY DATA (INCLUDING DATASHEETS), DESIGN RESOURCES (INCLUDING REFERENCE DESIGNS), APPLICATION OR OTHER DESIGN ADVICE, WEB TOOLS, SAFETY INFORMATION, AND OTHER RESOURCES “AS IS” AND WITH ALL FAULTS, AND DISCLAIMS ALL WARRANTIES, EXPRESS AND IMPLIED, INCLUDING WITHOUT LIMITATION ANY IMPLIED WARRANTIES OF MERCHANTABILITY, FITNESS FOR A PARTICULAR PURPOSE OR NON-INFRINGEMENT OF THIRD PARTY INTELLECTUAL PROPERTY RIGHTS.

These resources are intended for skilled developers designing with TI products. You are solely responsible for (1) selecting the appropriate TI products for your application, (2) designing, validating and testing your application, and (3) ensuring your application meets applicable standards, and any other safety, security, regulatory or other requirements.

These resources are subject to change without notice. TI grants you permission to use these resources only for development of an application that uses the TI products described in the resource. Other reproduction and display of these resources is prohibited. No license is granted to any other TI intellectual property right or to any third party intellectual property right. TI disclaims responsibility for, and you fully indemnify TI and its representatives against any claims, damages, costs, losses, and liabilities arising out of your use of these resources.

TI’s products are provided subject to TI’s Terms of Sale, TI’s General Quality Guidelines, or other applicable terms available either on ti.com or provided in conjunction with such TI products. TI’s provision of these resources does not expand or otherwise alter TI’s applicable warranties or warranty disclaimers for TI products. Unless TI explicitly designates a product as custom or customer-specified, TI products are standard, catalog, general purpose devices.

TI objects to and rejects any additional or different terms you may propose.

Copyright © 2026, Texas Instruments Incorporated

Last updated 10/2025