LMX1214 Low-Noise, High-Frequency Buffer and Divider

1 Features

- Clock buffer for 300MHz to 18GHz frequency
- Divider output frequency supported up to 8GHz
- Ultra-Low Noise
  - Noise floor of –161dBc/Hz at 6GHz output
  - 36fs additive jitter (100Hz to f_{CLK}) at 6GHz output
  - 5fs additive jitter (100Hz - 100MHz)
- 4 high-frequency clocks output
  - with shared divider by 1 (Bypass), 2, 3, 4, 5, 6, 7, and 8
- 1ps typical output to output skew
- Support pin mode options for outputs enable and divider /2, /3 and /4 values set
- AUXCLK output
  - On separate divide bank
  - 1, 2, 4 pre-divider
  - 1 (bypass), 2, …, 1023 post divider
- 8 programmable output power levels
- SYNC feature to all divides
- 2.5V operating voltage
- –40ºC to +85ºC operating temperature

2 Applications

- Test & Measurement:
  - Oscilloscope
  - Wireless equipment testers
  - Wideband digitizers
- Aerospace & Defense:
  - Radar
  - Electronic warfare
  - Seeker Front end
  - Munitions
  - Phase array antenna / Beam forming
- General Purpose:
  - Data converter clocking
  - Clock buffer distribution / division

3 Description

The LMX1214 features high output frequency, ultra-low noise floor, and very low skew clocks distribution. The device has four high-frequency output clocks and a lower frequency auxiliary clock output. The device supports both buffer and divide mode for the high-frequency clocks. This device can distribute the mutlichannel, low skew, ultra-low noise local oscillator signals to multiple mixers.

Package Information

PART NUMBER	PACKAGE(1)	PACKAGE SIZE(2)
LMX1214	RHA (VQFN, 40)	6mm × 6mm

(1) For all available packages, see the orderable addendum at the end of the data sheet.
(2) The package size (length × width) is a nominal value and includes pins, where applicable.

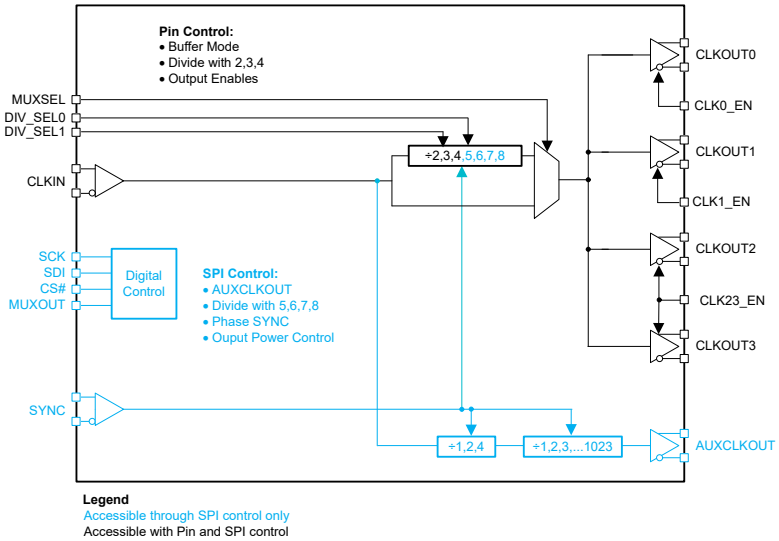

Block Diagram

An IMPORTANT NOTICE at the end of this data sheet addresses availability, warranty, changes, use in safety-critical applications, intellectual property matters and other important disclaimers. PRODUCTION DATA.

Table of Contents

1 Features....1
2 Applications....1
3 Description....1
4 Pin Configuration and Functions....3
5 Specifications....5
5.1 Absolute Maximum Ratings....5
5.2 ESD Ratings....5
5.3 Recommended Operating Conditions....5
5.4 Thermal Information....5
5.5 Electrical Characteristics....5
5.6 Timing Requirements....7
5.7 Timing Diagram....8
5.8 Typical Characteristics....9
6 Detailed Description....11
6.1 Overview....11
6.2 Functional Block Diagram....12
6.3 Feature Description....13
6.4 Device Functional Modes Configurations....18
7 Register Map....20
7.1 Device Registers....21
8 Application and Implementation....28
8.1 Application Information....29
8.2 Typical Application....31
8.3 Power Supply Recommendations....33
8.4 Layout....33
9 Device and Documentation Support....34
9.1 Device Support....34
9.2 Documentation Support....35
9.3 Receiving Notification of Documentation Updates....35
9.4 Support Resources....35
9.5 Trademarks....35
9.6 Electrostatic Discharge Caution....35
9.7 Glossary....35
10 Revision History....35
11 Mechanical, Packaging, and Orderable Information....36
11.1 Tape and Reel Information....40

Copyright © 2024 Texas Instruments Incorporated

4 Pin Configuration and Functions

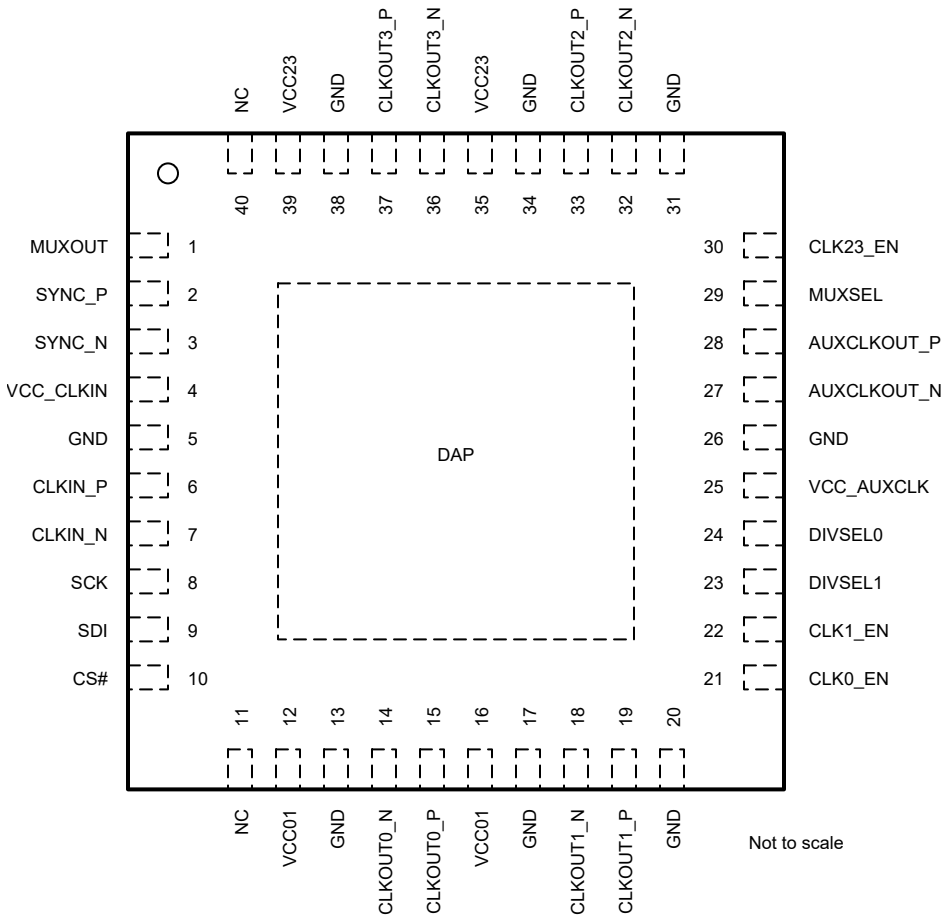

Figure 4-1. RHA0040C Package 40-Pin VQFN Top View

Table 4-1. Pin Functions

NO.	NAME	TYPE[1]	DESCRIPTION
1	MUXOUT	O	SPI readback output (SDO).
2	SYNC_P	I	Differential synchronization input. Internal 100-Ω differential termination AC-coupled to GND with a 10-pf capacitor. Supports AC and DC coupling which can directly accept a common mode voltage of 1.2 V to 2 V.
3	SYNC_N		
4	VCC_CLKIN	PWR	Connect to a 2.5-V supply. Recommend a shunt RF wideband capacitor (typically 0.1 µF or smaller) close to the pin in parallel with larger capacitors (typically 1 µF and 10 µF). Large capacitors can be placed bit further away from the pin.
5	GND	GND	Ground these pins.
6	CLKIN_P	I	Differential reference input clock. Internal 100-Ω differential termination. AC-couple with a capacitor appropriate to the input frequency (typically 0.1 µF or smaller). If using single-ended, terminate unused pin with 50-Ω resistor AC-coupled to ground.
7	CLKIN_N		
8	SCK	I	SPI clock. High impedance CMOS input. Accepts up to 3.3 V.
9	SDI	I	SPI data input. High impedance CMOS input. Accepts up to 3.3 V.
10	CS#	I	SPI chip select. High impedance CMOS input. Accepts up to 3.3 V.
11	NC	—	Not connected
12	VCC01	PWR	Connect to a 2.5-V supply. Recommend a shunt RF wideband capacitor (typically 0.1 µF or smaller) close to the pin in parallel with larger capacitors (typically 1 µF and 10 µF). Large capacitors can be placed bit further away from the pin.

Copyright © 2024 Texas Instruments Incorporated

Table 4-1. Pin Functions (continued)

NO.	NAME	TYPE[1]	DESCRIPTION
13	GND	GND	Ground this pin
14	CLKOUT0_N	O	Differential clock output pairs. Each pin is an open-collector output with internally integrated 50-Ω resistor with programmable output swing. AC coupling required.
15	CLKOUT0_P		
16	VCC01	PWR	Connect to a 2.5-V supply. Recommend a shunt RF wideband capacitor (typically 0.1 µF or smaller) close to the pin in parallel with larger capacitors (typically 1 µF and 10 µF). Large capacitors can be placed bit further away from the pin.
17	GND	GND	Ground this pin
18	CLKOUT1_N	O	Differential clock output pairs. Each pin is an open-collector output with internally integrated 50-Ω resistor with programmable output swing. AC coupling required.
19	CLKOUT1_P		
20	GND	GND	Ground this pin
21	CLK0_EN	I	CLKOUT0 output enable pin
22	CLK1_EN	I	CLKOUT1 output enable pin
23	DIVSEL1	I	Main clock out divider value 2, 3, and 4 selection control pins
24	DIVSEL0		
25	VCC_AUXCLK	PWR	Connect to a 2.5-V supply. Recommend a shunt RF wideband capacitor (typically 0.1 µF or smaller) close to the pin in parallel with larger capacitors (typically 1 µF and 10 µF). Large capacitors can be placed bit further away from the pin.
26	GND	GND	Ground this pin
27	AUXCLKOUT_N	O	Differential clock output pair. Selectable CML, or LVDS format. Programmable common-mode voltage.
28	AUXCLKOUT_P		
29	MUXSEL	I	Clock out Bypass or Divider path MUX selection
30	CLK23_EN	I	CLKOUT2 & CLKOUT3 output enable pin
31	GND	GND	Ground this pin
32	CLKOUT2_N	O	Differential clock output pairs. Each pin is an open-collector output with internally integrated 50-Ω resistor with programmable output swing. AC coupling required.
33	CLKOUT2_P		
34	GND	GND	Ground this pin
35	VCC23	PWR	Connect to a 2.5-V supply. Recommend a shunt RF wideband capacitor (typically 0.1 µF or smaller) close to the pin in parallel with larger capacitors (typically 1 µF and 10 µF). Large capacitors can be placed bit further away from the pin.
36	CLKOUT3_N	O	Differential clock output pairs. Each pin is an open-collector output with internally integrated 50-Ω resistor with programmable output swing. AC coupling required.
37	CLKOUT3_P		
38	GND	GND	Ground this pin
39	VCC23	PWR	Connect to a 2.5-V supply. Recommend a shunt RF wideband capacitor (typically 0.1 µF or smaller) close to the pin in parallel with larger capacitors (typically 1 µF and 10 µF). Large capacitors can be placed bit further away from the pin.
40	NC	—	Not connected
GND	DAP	GND	Ground this pin

(1) I = Input; O = Output; GND = Ground; PWR = Power

Copyright © 2024 Texas Instruments Incorporated

5 Specifications

5.1 Absolute Maximum Ratings

over operating free-air temperature range (unless otherwise noted)[1]

		MIN	MAX	UNIT
V_{DD}	Power supply voltage	–0.3	2.75	V
V_{IN}	DC Input Voltage (SCK, SDI, CSB)	GND	3.6	V
V_{IN}	DC Input Voltage (SYNC)	GND	V_{DD} + 0.3	V
V_{IN}	AC Input Voltage (CLKIN)		2.1	Vpp
T_J	Junction temperature		150	°C
T_{stg}	Storage temperature	–65	150	°C

(1) Operation outside the Absolute Maximum Ratings may cause permanent device damage. Absolute Maximum Ratings do not imply functional operation of the device at these or any other conditions beyond those listed under Recommended Operating Conditions. If used outside the Recommended Operating Conditions but within the Absolute Maximum Ratings, the device may not be fully functional, and this may affect device reliability, functionality, performance, and shorten the device lifetime.

5.2 ESD Ratings

			VALUE	UNIT
$V_{(ESD)}$	Electrostatic discharge	Human body model (HBM), per ANSI/ESDA/JEDEC JS-001, all pins[1]	±2500	V
		Charged device model (CDM), per ANSI/ESDA/JEDEC JS-002, all pins[2]	±500	

(1) JEDEC document JEP155 states that 500-V HBM allows safe manufacturing with a standard ESD control process.
(2) JEDEC document JEP157 states that 250-V CDM allows safe manufacturing with a standard ESD control process.

5.3 Recommended Operating Conditions

over operating free-air temperature range (unless otherwise noted)

		MIN	NOM	MAX	UNIT
V_{DD}	Supply voltage	2.4	2.5	2.6	V
T_A	Ambient temperature	–40		85	°C
T_J	Junction temperature			125	°C

5.4 Thermal Information

SYMBOL	THERMAL METRIC[1]	VALUE	UNIT
$R_{\theta JA}$	Junction-to-ambient thermal resistance	24.8	°C/W
$R_{\theta JC(top)}$	Junction-to-case (top) thermal resistance	13.0	°C/W
$R_{\theta JB}$	Junction-to-board thermal resistance	6.9	°C/W
Ψ_{JT}	Junction-to-top characterization parameter	0.1	°C/W
Ψ_{JB}	Junction-to-board characterization parameter	6.9	°C/W
$R_{\theta JC(bot)}$	Junction-to-case (bottom) thermal resistance	0.5	°C/W

(1) For more information about traditional and new thermal metrics, see the *Semiconductor and IC Package Thermal Metrics* application note.

5.5 Electrical Characteristics

2.4 V ≤ VCC ≤ 2.6 V, –40°C ≤ T_A ≤ +85°C. Typical values are at VCC = 2.5 V, 25°C (unless otherwise noted)

PARAMETER		TEST CONDITIONS	MIN	TYP	MAX	UNIT
Current Consumption						
I_{CC}	Supply current [1]	Powered up, all outputs on		530		mA
		Powered up, all outputs off		290		
		Powered down		12		

2.4 V ≤ VCC ≤ 2.6 V, –40°C ≤ T_A ≤ +85°C. Typical values are at VCC = 2.5 V, 25°C (unless otherwise noted)

PARAMETER		TEST CONDITIONS		MIN	TYP	MAX	UNIT
I_{ADD}	Additive output current	OUTx_PWR = 7			70		mA
	Divider current	Divide, CLK_DIV = 8			36		
Isync	Supply current	with SYNC enable			685		mA
SYNC Pins							
V_{SYNC_single}	Voltage input range	DC Coupled single ended		0.6		1	Vpp
V_{SYNC}	Voltage input range	AC differential voltage		0.8		2	Vpp
V_{CM}	Input common mode	Differential 100 Ω Termination, DC coupled Set externally		1.2	1.3	2	V
Clock Input							
f_{IN}	Input frequency	Buffer Mode Only		0.3		18[(2)]	GHz
P_{IN}	Input power	Single-ended power at CLKIN_P or CLKIN_N		0		10	dBm
Clock Outputs							
f_{OUT}	Output frequency	Divide-by-2	Without Sync (pin mode)	0.15		8	GHz
f_{OUT}	Output frequency	Divide-by-2	With Sync	0.15		6.4	GHz
f_{OUT}	Output frequency	Buffer Mode		0.3		18[(2)]	
f_{OUT}	Output frequency	AUXCLK output		1		800	MHz
p_{OUT}	Output power	Single-Ended	$f_{CLKLOUT}$= 6 GHz OUTx_PWR = 7		6.5		dBm
			$f_{CLKLOUT}$= 12.8 GHz OUTx_PWR = 7		3.5		
			$f_{CLKLOUT}$= 18 GHz OUTx_PWR = 7		1.5		
Φimb	Output phase imbalance between P & N	Buffer mode				5	ps
t_{RISE}	Rise time (20% to 80%)	f_{CLKOUT} = 300 MHz			45		ps
t_{FALL}	Fall time (20% to 80%)	f_{CLKOUT} = 300 MHz			45		ps
t_{MUTE}	Output mute time	Falling edge of OE pin				30	µs
t_{UNMUTE}	Output unmute time	Rising edge of OE pin				30	µs
Propagation Delay and Skew							
$\lvert t_{SKEW} \rvert$	Magnitude of skew between outputs	CLKOUTx to CLKOUTy, not AUXCLK			1	10	ps
t_{DLY}	Propagation delay	T_A=25ºC	Bypass Mode		120		ps
			Divide Mode		125		
$\Delta t_{DLY}/\Delta T$	Propagation delay variation over temperature	Bypass Mode			0.06		ps/C
Noise, Jitter, and Spurs							
J_{CKx}	Additive jitter	Additive Jitter. 12k to 100 MHz integration bandwidth.	Buffer Mode		5		fs, rms
Flicker	1/f flicker noise	Slew Rate > 8 V/ns, f_{CLK}=6 GHz	Buffer Mode		–154		dBc/Hz
NFL	Noise Floor	f_{OUT} = 6 GHz; f_{Offset} = 100 MHz	Buffer Mode		–161		dBc/Hz
NFL			Divide-by-2		–160.5		
H2	Second harmonic	f_{OUT} = 6 GHz (differential), Buffer Mode			–25		dBc
		f_{OUT} = 6 GHz (single-ended), Buffer Mode			–12		
		f_{OUT} = 6 GHz, single-ended, Divide by 2			–13.5		

Copyright © 2024 Texas Instruments Incorporated

2.4 V ≤ VCC ≤ 2.6 V, –40°C ≤ T_A ≤ +85°C. Typical values are at VCC = 2.5 V, 25°C (unless otherwise noted)

PARAMETER		TEST CONDITIONS		MIN	TYP	MAX	UNIT
Coupling	AUXCLK to CLKOUT coupling	fout = 6 GHz, Single-ended; f_{AUXCLK} = 300MHz			–70		dBc
NFL	Noise Floor	f_{AUXCLK} = 300MHz; LVDS mode			–152		dBc
NFL	Noise Floor	f_{AUXCLK} = 300MHz; CML mode			–151		dBc
P leakage	Leakage power Input to Output	Chip power down	Single Ended Input		–45		dBc
P leakage	Leakage power Input to Output	Pin OE = 0	Single Ended Input		–40		dBc
Digital Interface (SCK, SDI, CS#, MUXOUT,CLKx_EN,MUXSEL,DIVSELx)							
V_{IH}	High-level input voltage	SCK, SDI, CS#		1.4		3.3	V
	High-level input voltage	CLKx_EN,DIVSELx,MUXSEL		1.4		3.3	V
V_{IL}	Low-level input voltage	SCK, SDI, CS#		0		0.4	V
	Low-level input voltage	CLKx_EN,DIVSELx,MUXSEL		0		0.4	V
I_{IH}	High-level input current	SCK, SDI, CS#		–42		42	µA
	High-level input current	CLKx_EN,DIVSELx,MUXSEL		–42		42	µA
I_{IL}	Low-level input current	SCK, SDI, CS#		–25		25	µA
	Low-level input current	CLKx_EN,DIVSELx,MUXSEL		–25		25	µA
V_{OH}	High-level output voltage	MUXOUT	I_{OH} = 5 mA	1.4		Vcc	V
	High-level output voltage		I_{OH} = 0.1 mA	2.2		Vcc	V
V_{OL}	Low-level output voltage	MUXOUT	I_{OL} = 5 mA			0.45	V

(1) Unless Otherwise Stated, f_{CLKIN}=6 GHz, CLK_MUX=Buffer, All clocks on with OUTx_PWR=7.
(2) SYNC and dividers supported up to 12.8GHz frequency

5.6 Timing Requirements

		MIN	NOM	MAX	UNIT
Timing Requirements					
f_{SPI}	SPI Read/Write Speed			2	MHz
t_{CE}	Clock to enable low time	20			ns
t_{CS}	Clock to data wait time	20			ns
t_{CH}	Clock to data hold time	20			ns
t_{CWH}	Clock pulse width high	100			ns
t_{CWL}	Clock pulse width low	100			ns
t_{CES}	Enable to clock setup time	20			ns
t_{EWH}	Enable pulse width high	50			ns
t_{CD}	Falling clock edge to data wait time	0		100	ns

Copyright © 2024 Texas Instruments Incorporated

5.7 Timing Diagram

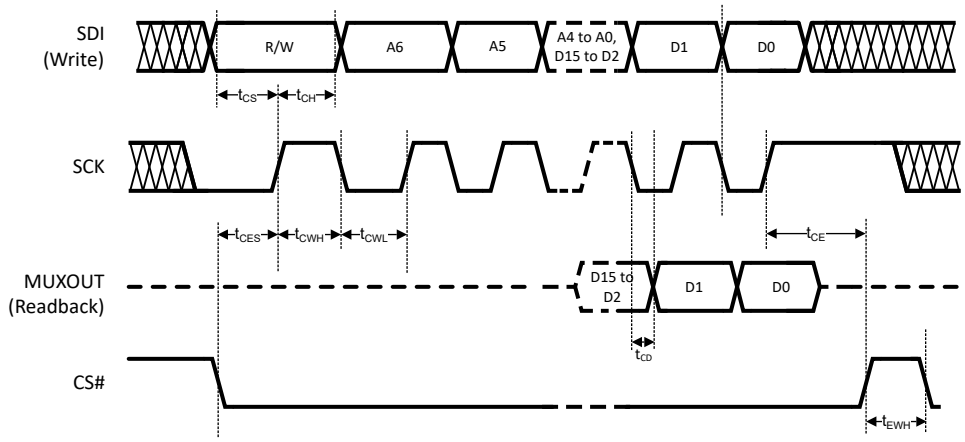

Figure 5-1. Serial Data Input Timing Diagram

There are several other considerations for writing on the SPI:

- The R/W bit must be set to 0.
- The data on SDI pin is clocked into a shift register on each rising edge on the SCK pin.
- The CS# must be held low for data to be clocked. The device ignores clock pulses if CS# is held high.
- Recommended SPI settings for this device are CPOL=0 and CPHA=0.
- When SCK and SDI lines are shared between devices, TI recommends to hold the CS# line high on the device that is not to be clocked.

There are several other considerations for SPI readback:

- The R/W bit must be set to 1.
- The MUXOUT pin is always be low for the address portion of the transaction.
- The data on MUXOUT is clocked out at the falling edge of SCK. In other words, the readback data is available at the MUXOUT pin t_{CD} after the clock falling edge.
- The data portion of the transition on the SDI line is always ignored.
- The MUXOUT pin does not automatically tri-state after a readback transaction completes. When sharing the SPI bus readback pin with other devices, set MUXOUT_EN=0 after all readback transactions from device are complete to manually tri-state the MUXOUT pin, permitting other devices to control the readback line.
- The values read back, even for R/W bits are not always the value written but rather an internal device state that takes into account the programmed value as well as other factors, such as pin states.

Copyright © 2024 Texas Instruments Incorporated

5.8 Typical Characteristics

If not otherwise, the following conditions can be assumed: Temperature = 25°C, Vcc = 2.5 V, OUTx_PWR = 7, CLKIN driven differentially with 8 dBm at each pin. Signal source used is SMA100B with ultra-low noise option B711.

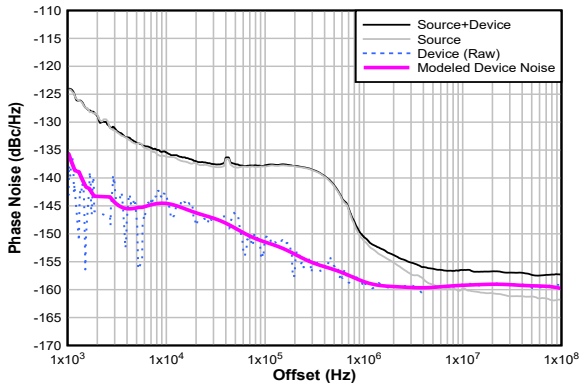

Noise floor = -160dBc/Hz

Figure 5-2. Buffer Phase Noise Plot at 6-GHz Output

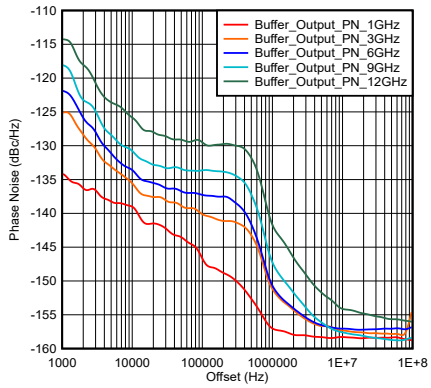

Source noise is not de-embedded.

Figure 5-3. Buffer Output Phase Noise Plots vs Output Frequencies

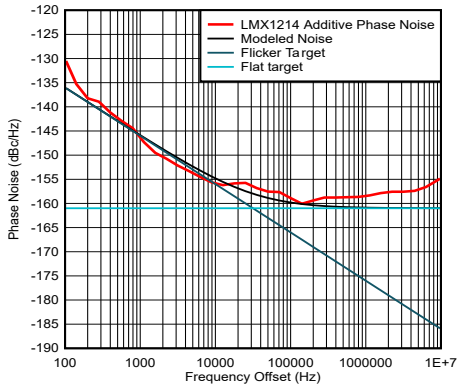

Figure 5-4. LMX1214 Flicker Noise at 6 GHz

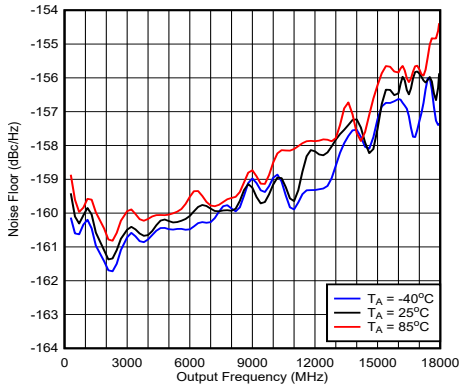

Figure 5-5. Noise Floor in Buffer Mode

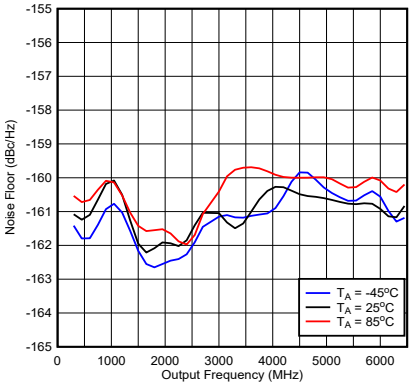

Figure 5-6. Noise Floor in Divider Mode

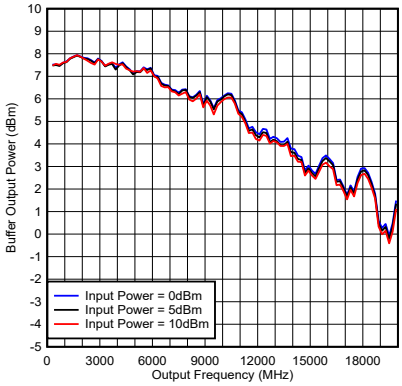

Figure 5-7. Buffer Mode Single-Ended Output Power vs Input Power

5.8 Typical Characteristics (continued)

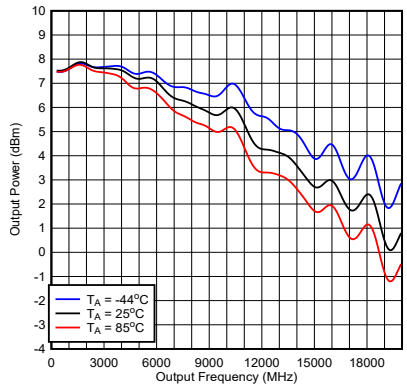

Figure 5-8. Buffer Mode Single-Ended Output Power Over Temperature

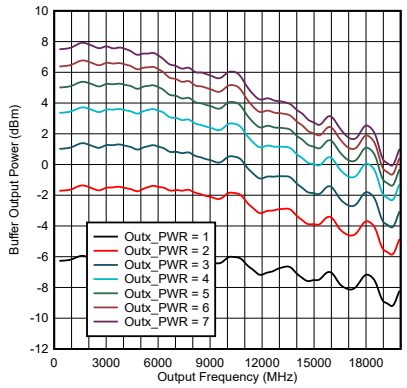

Applies to all modes except divider mode with odd divide (which have slightly lower power).

Figure 5-9. Buffer Mode Single-Ended Output Power vs Power Codes

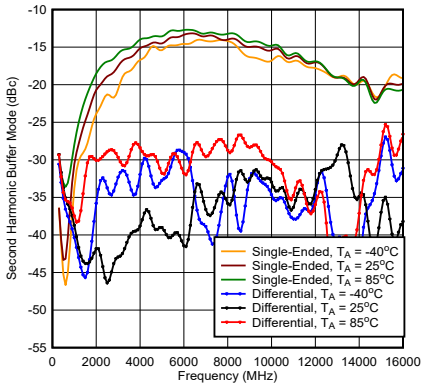

Figure 5-10. Second Harmonic in Buffer Mode

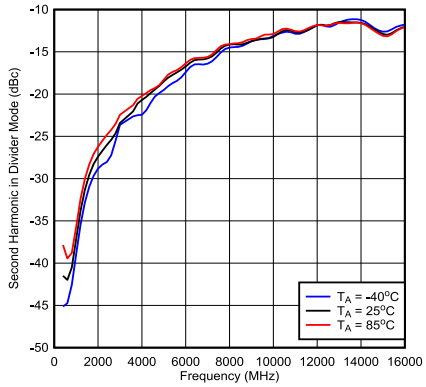

Single-Ended Input Power

Figure 5-11. Second Harmonic in Divider Mode

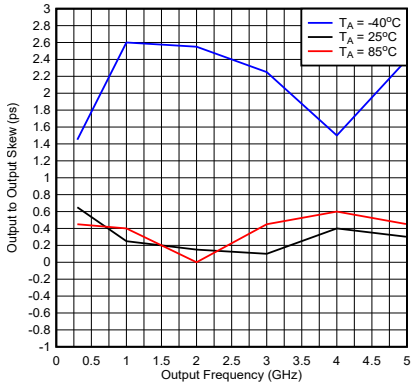

Figure 5-12. Output to Output Skew

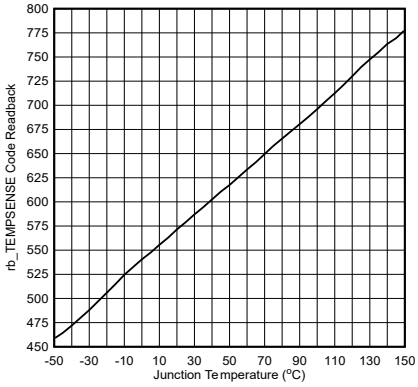

Measured in power-down mode to make Junction Temperature = Ambient Temperature.

Figure 5-13. Temperature Sensor Readback

Copyright © 2024 Texas Instruments Incorporated

5.8 Typical Characteristics (continued)

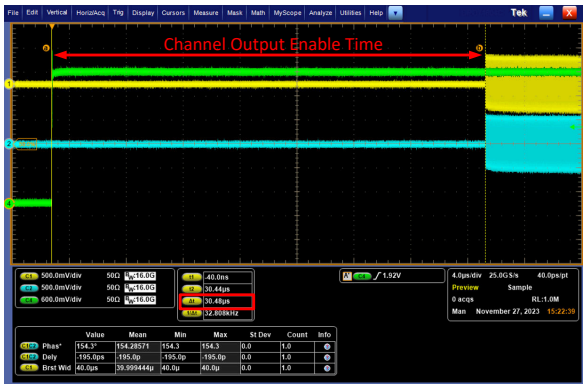

at 300-MHz Output Frequency

Figure 5-14. Channel Enable Setting Time

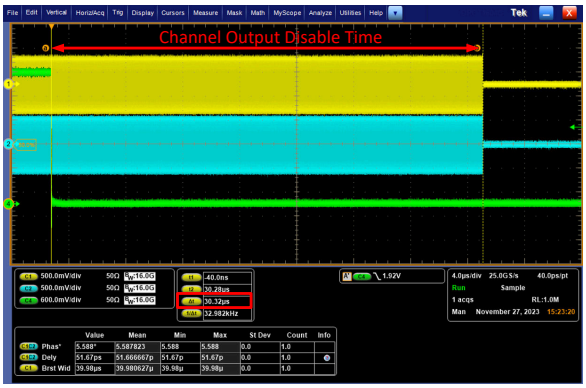

at 300-MHz Output Frequency

Figure 5-15. Channel Disable Setting Time

6 Detailed Description

6.1 Overview

This device has four main clock outputs and another AUXCLK output. The main clock outputs are all the same frequency. This frequency can be the same or divided relative to the input clock. Each of these clock outputs has programmable power level. The AUXCLK output frequency is independent and typically lower frequency than the other four main clocks and has programmable output format (CML and LVDS) and power level.

6.1.1 Range of Dividers

There are dividers that allow the main and AUXCLK outputs to be a divided value of the input clock. The main clock output has only one common divider, whereas the AUXCLK has a pre-divider and main divider.

Table 6-1. Range of Dividers

CATEGORY			SPI PROGRAMMABLE RANGE	PIN PROGRAMMABLE RANGE	COMMENTS
Main Clocks	Buffer			Yes	
	Divider		2, 3, 4, … 8	2,3,4	Odd divides (except 1) do not have 50% duty cycle
	Power Level		0,1,…,7	No	
AUXCLK	Divide	PreDivide	1, 2, 4	No	TotalDivide = PreDivide × Divide Odd divides (except 1) do not have 50% duty cycle
		Divide	1, 2, 3, … 1023	No	

6.2 Functional Block Diagram

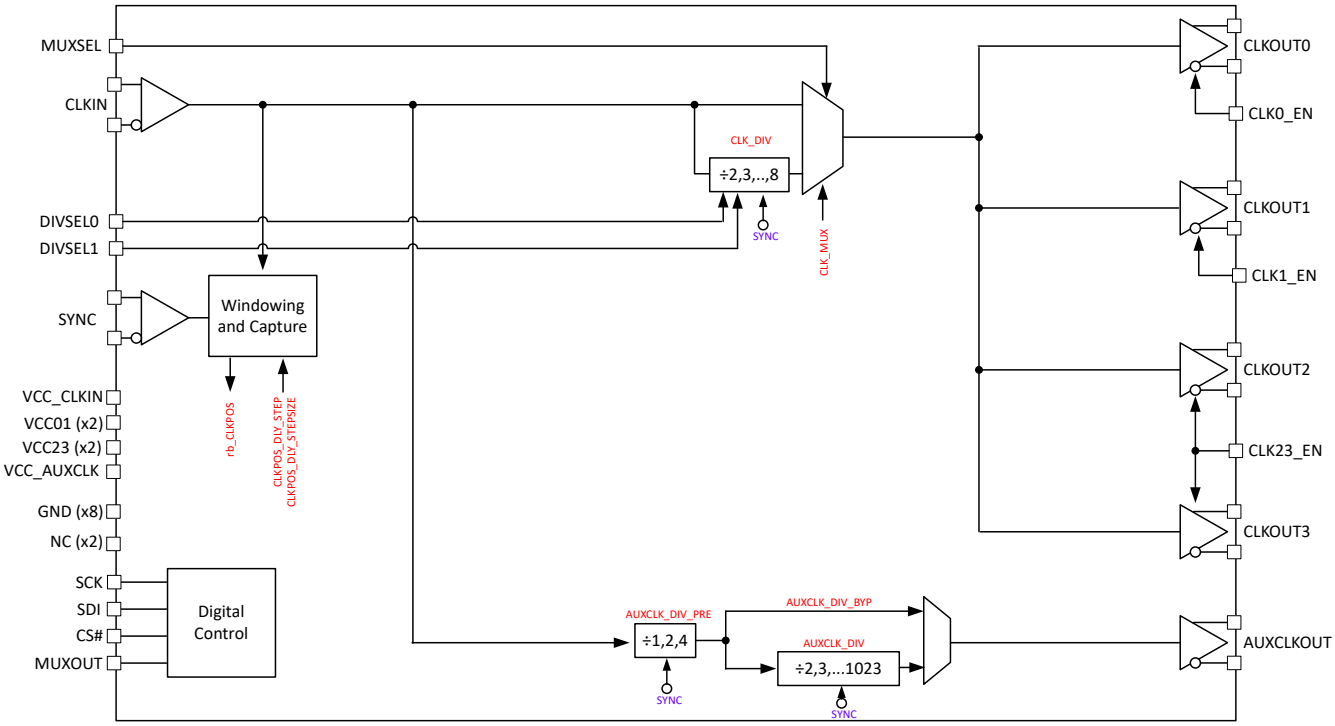

Figure 6-1. Functional Block Diagram

Copyright © 2024 Texas Instruments Incorporated

6.3 Feature Description

6.3.1 Power-On Reset

When the device is powered up, the power-on reset (POR) resets all registers to a default state as well as resets all state machines and dividers. For the power-on reset state, all the dividers are bypassed and the device performs as a 4-output buffer. Wait 100 µs after the power supply rails before programming other registers to verify that this reset is finished. When there is no input clock present, the device power-on reset happens properly and functions well, but the device draws less current. The current changes after an input clock is added.

Performing a software power-on reset by writing RESET = 1 in the SPI bus is also possible and generally good practice. The RESET bit self-clears when the user writes to another register. The SPI bus can be used to override these states to the desired settings.

Although the device does have an automatic power-on reset, the device can be impacted by different ramp rates on the different supply pins, especially in the presence of a strong input clock signal. TI therefore recommends to do a software reset after POR. This can be done by programming RESET = 1. The reset bit can be cleared by programming any other register or setting RESET back to 0. Even at the maximum allowed SPI bus speed, the software reset event always completes before the subsequent SPI write.

6.3.2 Temperature Sensor

The junction temperature can be read back for purposes such as characterization or to make adjustments based on temperature. Such adjustments can include adjusting CLKOUTx_PWR to make the output power more stable or using external or digital delays to compensate for changes in propagation delay over temperature.

The junction temperature is typically higher than the ambient temperature due to power dissipation from the outputs and other functions on the device. Equation 1 shows the relationship between the code read back and the junction temperature.

$$\text{Temperature} = 0.65 \times \text{Code} - 351 \tag{1}$$

Equation 1 is based on a best-fit line created from three devices from slow, nominal, and fast corner lots (nine parts total). The worst-case variation of the actual temperature from the temperature predicted by the best-fit line is 13°C, which works out to 20 codes.

6.3.3 Clock Outputs

This device has four main output clocks which share a common frequency. This does not include the additional lower frequency AUXCLK output.

6.3.3.1 Clock Output Buffers

The output buffers have a format that is open collector with an integrated pullup resistor, similar to CML.

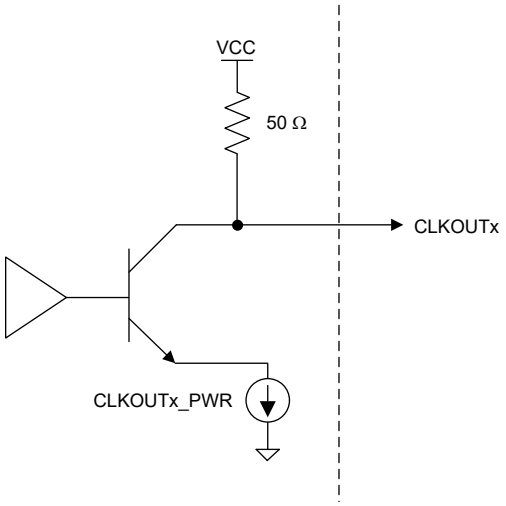

Figure 6-2. CLKOUT Output Buffer

The CLKOUTx_EN bits can enable the output buffers. The output power of the buffers can be individually set with CLKOUTx_PWR field.

Table 6-2. Clock Output Power

CLKOUTx_EN	CLKOUTx_PWR	OUTPUT BUFFER
0	Don't Care	Powered Down
1	0	Minimum
	1	
	...	
	7	Maximum

6.3.3.2 Clock MUX

The four main clocks are the same frequency, but this frequency can be bypassed or divided. This is determined by the CLK_MUX word.

Table 6-3. Clock MUX

CLK_MUX	OPTION	VALUES SUPPORTED
0	Buffer Mode	÷1 (bypass)
1	Divider Mode	÷2, 3, 4, 5, 6, 7, and 8

6.3.3.3 Clock Divider

Set the CLK_MUX to Divided to a divide value by 2, 3, 4, 5, 6, 7, or 8. This is set by the CLK_DIV word. When using the clock divider, any change to the input frequency requires the CLK_DIV_RST bit to be toggled from 1 to 0.

Table 6-4. Clock Divider

CLK_DIV	DIVIDE	DUTY CYCLE
0	Reserved	n/a
1	2	50%
2	3	33%
3	4	50%
4	5	40%
5	6	50%
6	7	43%

Copyright © 2024 Texas Instruments Incorporated

Table 6-4. Clock Divider (continued)

CLK_DIV	DIVIDE	DUTY CYCLE
7	8	50%

6.3.4 AUXCLK Output

The AUXCLK output can drive devices using lower frequency clocks, such as FPGAs. The AUXCLK output has the programmable output formats LVDS or CML.

6.3.4.1 AUXCLKOUT Output Format

The AUXCLKOUT output format can be programmed to LVDS and CML modes. Depending on the format, the common mode can be programmable or external components can be required.

Table 6-5. AUXCLKOUT Formats and Properties

AUXCLKOUT_FMT	FORMAT	EXTERNAL COMPONENTS REQUIRED	OUTPUT LEVEL	COMMON MODE
0	LVDS	None	Fixed	Programmable through AUXCLKOUT_VCM
2	CML	Pullup Resistors 50 Ω to V_{CC}	Programmable through AUXCLKOUT_PWR	Not programmable

6.3.4.2 AUXCLK_DIV_PRE and AUXCLK_DIV Dividers

The AUXCLK_DIV_PRE divider and AUXCLK_DIV dividers are used for the AUXCLKOUT output. The AUXCLK_DIV_PRE divider is necessary to divide the frequency down to verify that the input to the AUXCLK_DIV divider is 3.2 GHz or less. When AUXCLK_DIV is not even and not bypassed, the duty cycle is not be 50%. Both the AUXCLKOUT dividers are synchronized by the SYNC feature, which allows synchronization across multiple devices.

Table 6-6. Minimum N-Divider Restrictions

f_{CLKIN} (MHz)	AUXCLK_DIV_PRE	AUXCLK_DIV	TOTAL DIVIDE RANGE
f_{CLKIN} ≤ 3.2 GHz	÷1,2,4	÷1,2 ,3 ,…1023	[1, 2, ...1023] [2, 4, ... 2046] [4, 8, 4092]
3.2 GHz < f_{CLKIN}≤ 6.4 GHz	÷2,4	÷1, 2 ,3 ,…1023	[4, ... 2046] [4, 8, 4092]
f_{CLKIN} > 6.4 GHz	÷4	1, 2, 3 ,…1023	[8, 4092]

6.3.5 SYNC Input Pins

The SYNC pins are used for the SYNC and windowing features. These pins can be DC or AC coupled and have internal dual 50-Ω, single-ended termination with programmable common-mode support. SYNC input is required, when the clock dividers (device clock and AUXCLK) need to be synchronized and multi-device sync needed. For buffer mode, sync input is not necessary.

The SYNC feature allows the user to synchronize the CLK_DIV, AUXCLK_DIV, and AUXCLK_DIV_PRE dividers so that the phase offset can be made consistent between power cycles. This allows users to synchronize multiple devices. Multi-device synchronization dividers can only be done through the SYNC pin, not the software.

6.3.5.1 SYNC Pins Common-Mode Voltage

The SYNC_P and SYNC_N pins can be driven either AC or DC coupled. When driven AC coupled, the common-mode voltage can be adjusted with the SYNC_VCM bit.

Table 6-7. SYNC Pin Common-Mode Voltage

SYNC_VCM	COMMON-MODE VOLTAGE
0	1.3 V AC-coupled

Copyright © 2024 Texas Instruments Incorporated

Table 6-7. SYNC Pin Common-Mode Voltage (continued)

SYNC_VCM	COMMON-MODE VOLTAGE
1	1.1 V AC-coupled
2	1.5 V AC-coupled
3	No-Bias (DC Coupled)

6.3.5.2 Windowing Feature

The windowing feature can be used to internally calibrate the timing between the SYNC and CLKIN pins to optimize setup and hold timing and trim out any mismatches between the SYNC and CLKIN paths. This feature requires that the timing from the SYNC rising edge to the CLKIN rising edge is consistent. The timing from the SYNC rising edge to the CLKIN rising edges can be tracked with the rb_CLKPOS field. After the timing to the rising edge of the CLKIN pin is found, the SYNC rising edge can be internally adjusted with the SYNC_DLY and SYNC_DLY_STEP fields to optimize setup and hold times.

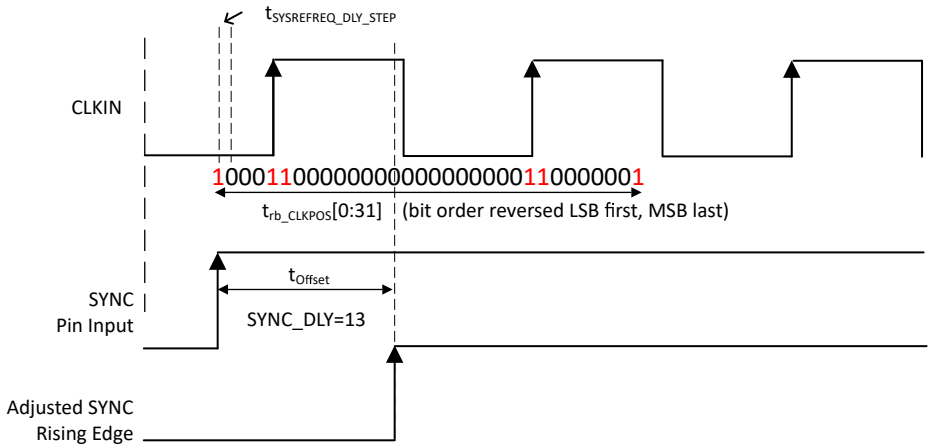

Figure 6-3. SYNC Internal Timing Adjustment

Copyright © 2024 Texas Instruments Incorporated

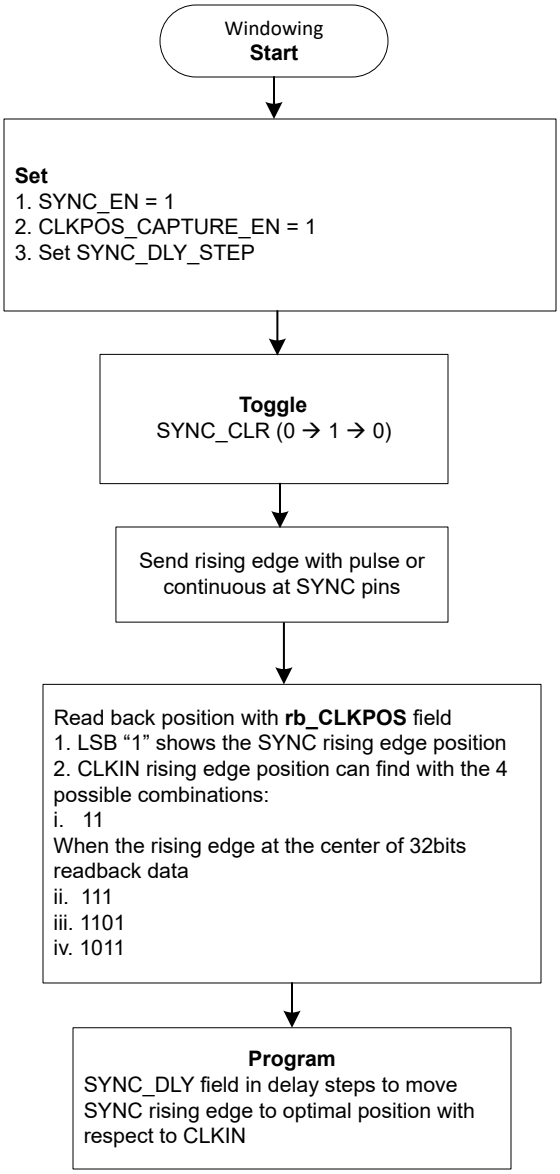

Figure 6-4. Flowchart for Windowing Operation

Table 6-8. SYNC_DLY_STEP

INPUT FREQUENCY	RECOMMENDED SYNC_DLY_STEP	DELAY (ps)
1.4 GHz < f_{CLKIN} ≤ 2.7 GHz	0	28
2.4 GHz < f_{CLKIN} ≤ 4.7 GHz	1	15
3.1 GHz < f_{CLKIN} ≤ 5.7 GHz	2	11
f_{CLKIN} ≥ 4.5 GHz	3	8

For the windowing feature:

1. The SYNC pins must be held high for a minimum time of $3/f_{CLKIN}$ + 1.6 ns and only after this time rb_CLKPOS field is valid.
2. If the user infers multiple valid SYNC_DLY values from rb_CLKPOS registers to avoid setup-hold violations, TI recommends to choose the lowest valid SYNC_DLY to minimize variation over temperature.

For SYNC operation:

1. Only one SYNC pin rising edge is permitted per 75 input clock cycles
2. SYNC must stay high for more than six clock cycles

6.4 Device Functional Modes Configurations

The device can configure in high frequency clock buffer mode or divider mode. Each mode requires the below register configurations to function.

Table 6-9. Device Functional Modes Settings

REGISTER ADDRESS	BIT	FIELD	FUNCTION	BUFFER	DIVIDER
R25	2:0	CLK_MUX	Select the mode	1	2
R25	5:3	CLK_DIV	Select the division value	x	CLK_DIV 0x1 = ÷2 0x2 = ÷3 0x3 = ÷4 0x4 = ÷5 0x5 = ÷6 0x6 = ÷7 0x7 = ÷8

6.4.1 Pin Mode Control

The LMX1214 supports pin mode for individual clock output control, mux selection and few dividers settings.

Below are the pin control options:

Output Channel Control

CLKOUT0 and CLKOUT1 have individual output control pins, whereas CLKOUT2 and CLKOUT3 uses a common control pin. These pins enable or disable the CLKOUT of particular channel outputs. Output channels can be controlled through SPI when CLKx_EN pin is high (1).

Table 6-10. Output Channel Control Selection

CLKx_EN	CHANNEL OUTPUT STATE	SPI OVERRIDE CONTROL
0	Disable Channel Output	No
1	Enable Channel Output	Yes

Device Mode Selection

The device can function in buffer mode or divider mode, which can be set through the MUXSEL pin.

Table 6-11. Device Mode Selection

MUXSEL	Mode Selection	SPI OVERRIDE CONTROL
0	Buffer Mode	Yes
1	Divider Mode	No

Divider Value Selection

When the divider mode is selected by MUXSEL pin logic or SPI control, the divider values (/2, /3 or /4) are selected by DIVSELx pin logic.

Copyright © 2024 Texas Instruments Incorporated

Table 6-12. Divider Value Selection

DIVSEL1	DIVSEL0	DIVIDER VALUE
0	0	SPI Override
0	1	2
1	0	3
1	1	4

7 Register Map

	D15	D14	D13	D12	D11	D10	D9	D8	D7	D6	D5	D4	D3	D2	D1	D0
R0	0	0	0	0	0	0	0	0	0	0	0	0	0	POWERDOWN	0	0
R2	0	0	0	0	0	0	1	0	0	0	SMCLK_EN	0	0	0	1	1
R3	CLKOUT3_EN	CLKOUT2_EN	CLKOUT1_EN	CLKOUT0_EN	1	1	1	1	1	0	0	0	0	1	1	0
R4	0	0	CLKOUT1_PWR			CLKOUT0_PWR			1	1	1	1	1	1	1	1
R5	0	0	1	1	0	1	1	0	1	1	CLKOUT3_PWR			CLKOUT2_PWR		
R7	0	1	0	AUXCLKOUT_VCM		1	0	AUXCLK_DIV_PWR_PRE		0	1	1	AUXCLKOUT_PWR			1
R8	0	0	0	0	0	0	0	AUXCLK_DIV_PRE			AUXCLKOUT_EN	0	0	0	AUXCLKOUT_FMT	
R9	SYNC_VCM		SYNC_EN	0	AUXCLK_DIV_BYP	0	AUXCLK_DIV									
R11	rb_CLKPOS															
R12	rb_CLKPOS[31:16]															
R13	0	0	0	0	0	0	0	0	0	0	0	0	0	0	SYNC_DLY_STEP	
R14	0	0	0	0	0	0	0	0	0	0	0	0	0	CLKPOS_CAPTURE_EN	1	SYNC_LATCH
R15	0	0	0	0	1	0	1	1	0	SYNC_DLY						SYNC_CLR
R23	TS_EN	1	MUXOUT_EN	0	0	0	0	0	0	0	0	0	0	0	0	0
R24	0	0	0	0	rb_TS											TS_CNT_EN
R25	0	0	0	0	0	0	1	0	0	CLK_DIV_RST	CLK_DIV			CLK_MUX		
R75	rb_CLKOUT2_EN	rb_CLKOUT1_EN	rb_CLKOUT0_EN	rb_MUXSEL1	0	0	0	0	0	rb_DIVSEL1	rb_DIVSEL0	rb_CE	0	1	1	0
R79	0	0	0	0	0	0	0	0	0	0	0	0	0	1	0	1
R86	0	0	0	0	0	0	0	0	0	0	0	0	0	MUXOUT_EN_OVRD	0	0
R90	0	0	0	0	0	0	0	0	0	AUXCLK_DIV_BYP3	AUXCLK_DIV_BYP2	0	0	0	0	0

Programming is NOT required for buffer mode, but can be done to enable other features and enhancements	
Registers	Enhancements
R0, R3, R4, and R5	Outputs

Copyright © 2024 Texas Instruments Incorporated

R2, R75	Pin Modes
R7,R8,,R9,R79,R90	AUXCLK. R79 and R90 are only needed if using a divide by 1 if bypassing the pre-divider for the AUXCLK
R11,R12,R13,R14,R15	SYNC
R23, R24, R86	MUXOUT, Readback, and Temp Sensor
R25	Main Divide

7.1 Device Registers

Table 7-1 lists the memory-mapped registers for the Device registers. All register offset addresses not listed in Table 7-1 must be considered as reserved locations and the register contents must not be modified.

Table 7-1. DEVICE Registers

Offset	Acronym	Description	Section
0x0	R0		Section 7.1.1
0x2	R2		Section 7.1.2
0x3	R3		Section 7.1.3
0x4	R4		Section 7.1.4
0x5	R5		Section 7.1.5
0x7	R7		Section 7.1.6
0x8	R8		Section 7.1.7
0x9	R9		Section 7.1.8
0xB	R11		Section 7.1.9
0xC	R12		Section 7.1.10
0xD	R13		Section 7.1.11
0xE	R14		Section 7.1.12
0xF	R15		Section 7.1.13
0x17	R23		Section 7.1.14
0x18	R24		Section 7.1.15
0x19	R25		Section 7.1.16
0x4B	R75		Section 7.1.17
0x4F	R79		Section 7.1.18
0x56	R86		Section 7.1.19
0x5A	R90		Section 7.1.20

Complex bit access types are encoded to fit into small table cells. Table 7-2 shows the codes that are used for access types in this section.

Table 7-2. Device Access Type Codes

Access Type	Code	Description
Read Type		
R	R	Read
Write Type		
W	W	Write
Reset or Default Value		
-n		Value after reset or the default value

7.1.1 R0 Register (Offset = 0x0) [Reset = 0x0000]

R0 is shown in Table 7-3.

Return to the Summary Table.

Table 7-3. R0 Register Field Descriptions

Bit	Field	Type	Reset	Description
15-3	UNDISCLOSED	R	0x0	Program this field to 0x0.
2	POWERDOWN	R/W	0x0	Sets the device in a low-power state. The states of other registers are maintained.
1-0	UNDISCLOSED	R/W	0x0	Program this field to 0x0.

7.1.2 R2 Register (Offset = 0x2) [Reset = 0x0223]

R2 is shown in Table 7-4.

Return to the Summary Table.

Table 7-4. R2 Register Field Descriptions

Bit	Field	Type	Reset	Description
15-11	UNDISCLOSED	R	0x0	Program this field to 0x0.
10-6	UNDISCLOSED	R/W	0x8	Program this field to 0x8.
5	SMCLK_EN	R/W	0x1	Enables the state machine clock generator. This is required for pin modes to function correctly and the part must be initialized with this bit enabled. However, this bit can later on be disabled to save current and prevent the state machine clock spur.
4-0	UNDISCLOSED	R/W	0x3	Program this field to 0x3.

7.1.3 R3 Register (Offset = 0x3) [Reset = 0xF0FE]

R3 is shown in Table 7-5.

Return to the Summary Table.

Table 7-5. R3 Register Field Descriptions

Bit	Field	Type	Reset	Description
15	CLKOUT3_EN	R/W	0x1	Enables CLKOUT3
14	CLKOUT2_EN	R/W	0x1	Enables CLKOUT2
13	CLKOUT1_EN	R/W	0x1	Enables CLKOUT1
12	CLKOUT0_EN	R/W	0x1	Enables CLKOUT0
11-0	UNDISCLOSED	R/W	0xFE	Program this field to 0xFE.

7.1.4 R4 Register (Offset = 0x4) [Reset = 0x36FF]

R4 is shown in Table 7-6.

Return to the Summary Table.

Table 7-6. R4 Register Field Descriptions

Bit	Field	Type	Reset	Description
15-14	UNDISCLOSED	R	0x0	Program this field to 0x0.
13-11	CLKOUT1_PWR	R/W	0x6	Sets the output power of CLKOUT1. Larger values correspond to higher output power.
10-8	CLKOUT0_PWR	R/W	0x6	Sets the output power of CLKOUT0. Larger values correspond to higher output power.
7-0	UNDISCLOSED	R/W	0xFF	Program this field to 0xFF.

Copyright © 2024 Texas Instruments Incorporated

7.1.5 R5 Register (Offset = 0x5) [Reset = 0x36F6]

R5 is shown in Table 7-7.

Return to the Summary Table.

Table 7-7. R5 Register Field Descriptions

Bit	Field	Type	Reset	Description
15	UNDISCLOSED	R	0x0	Program this field to 0x0.
14-6	UNDISCLOSED	R/W	0xDB	Program this field to 0xDB.
5-3	CLKOUT3_PWR	R/W	0x6	Sets the output power of CLKOUT3. Larger values correspond to higher output power.
2-0	CLKOUT2_PWR	R/W	0x6	Sets the output power of CLKOUT2. Larger values correspond to higher output power.

7.1.6 R7 Register (Offset = 0x7) [Reset = 0x543F]

R7 is shown in Table 7-8.

Return to the Summary Table.

Table 7-8. R7 Register Field Descriptions

Bit	Field	Type	Reset	Description
15	UNDISCLOSED	R	0x0	Program this field to 0x0.
14-13	UNDISCLOSED	R/W	0x2	Program this field to 0x2.
12-11	AUXCLKOUT_VCM	R/W	0x2	In LVDS mode, sets the output common mode of the auxiliary clock output. Other output formats ignore this field. 0x0 = 1.2V 0x1 = 1.1V 0x2 = 1.0V 0x3 = 0.9V
10-9	UNDISCLOSED	R/W	0x2	Program this field to 0x2.
8-7	AUXCLK_DIV_PWR_PRE	R/W	0x0	Sets the output power of the AUXCLK pre-driver. Larger values correspond to higher output power.
6-4	UNDISCLOSED	R/W	0x3	Program this field to 0x3.
3-1	AUXCLKOUT_PWR	R/W	0x7	Sets the output power of AYXCLKOUT for CML format only (other output formats ignore this field). Larger values correspond to higher output power.
0	UNDISCLOSED	R/W	0x1	Program this field to 0x1.

7.1.7 R8 Register (Offset = 0x8) [Reset = 0x0120]

R8 is shown in Table 7-9.

Return to the Summary Table.

Table 7-9. R8 Register Field Descriptions

Bit	Field	Type	Reset	Description
15-9	UNDISCLOSED	R	0x0	Program this field to 0x0.
8-6	AUXCLK_DIV_PRE	R/W	0x4	Sets pre-divider value. Output of the pre-divider must be less than or equal to 3.2 GHz. When AUXCLK_DIV_PRE=1, register R79 is also required to be programmed to a value of 0x0005 and R90 to 0x0060 (AUXCLK_DIV_BYP2=1, AUXCLK_DIV_BYP3=1). Values for AUXCLK_DIV_PRE other than those listed below are reserved. 0x1 = /1 0x2 = /2 0x4 = /4
5	AUXCLKOUT_EN	R/W	0x1	Enables AUXCLK subsystem.

Copyright © 2024 Texas Instruments Incorporated

Table 7-9. R8 Register Field Descriptions (continued)

Bit	Field	Type	Reset	Description
4-2	UNDISCLOSED	R/W	0x0	Program this field to 0x0.
1-0	AUXCLKOUT_FMT	R/W	0x0	Selects the output driver format of the AUXCLKOUT output. 0x0 = LVDS 0x1 = Reserved 0x2 = CML 0x3 = Reserved

7.1.8 R9 Register (Offset = 0x9) [Reset = 0x0020]

R9 is shown in Table 7-10.

Return to the Summary Table.

Table 7-10. R9 Register Field Descriptions

Bit	Field	Type	Reset	Description
15-14	SYNC_VCM	R/W	0x0	Sets the internal DC Bias for the SYNC pins. Bias must be enabled for AC-coupled inputs; but can be enabled and overdriven, or disabled, for DC-coupled inputs. SYNC DC pin voltage must be in the range of 0.7 V to VCC, including minimum and maximum signal swing. 0x0 = 1.3V 0x1 = 1.1V 0x2 = 1.5V 0x3 = Disabled
13	SYNC_EN	R/W	0x0	Enables synchronization path for the dividers and allows the clock position capture circuitry to be enabled. Used for multi-device synchronization.
12	UNDISCLOSED	R/W	0x0	Program this field to 0x0.
11	AUXCLK_DIV_BYP	R/W	0x0	Bypasses the AUXCLK_DIV divider to derive the AUXCLK output directly from the AUXCLK_DIV_PRE divider. Use only when AUXCLK_DIV_PRE=1 as one of the steps to achieve a total divide of 1 for the AUXCLK. To achieve a divide by 1, the following steps are required. 1. Set AUXCLK_DIV_PRE=1 2. Verify that register R79 is programmed to a value of 0x0005 3. Program R90 to 0x0060 (AUXCLK_DIV_BYP2=1, AUXCLK_DIV_BYP3=1) 4. Set AUXCLK_DIV_BYP=1 If a total divide of 1 for the AUXCLK is undesired, set this bit to 0.
10	UNDISCLOSED	R/W	0x0	Program this field to 0x0.
9-0	AUXCLK_DIV	R/W	0x20	Sets AUXCLK divider value. Maximum input frequency from AUXCLK_DIV_PRE must be ≤ 3200 MHz. The maximum AUXCLKOUT frequency must be ≤ 800 MHz to avoid amplitude degradation. 0x0 = Reserved 0x1 = Reserved 0x2 = /2 0x3 = /3 0x3FF = /1023

7.1.9 R11 Register (Offset = 0xB) [Reset = 0x0000]

R11 is shown in Table 7-11.

Return to the Summary Table.

Copyright © 2024 Texas Instruments Incorporated

Table 7-11. R11 Register Field Descriptions

Bit	Field	Type	Reset	Description
15-0	rb_CLKPOS	R	0x0	Stores a snapshot of the CLKIN signal rising edge positions relative to a SYNC rising edge, with the snapshot starting from the LSB and ending at the MSB. Each bit represents a sample of the CLKIN signal, separated by a delay determined by the SYNC_DLY_STEP field. The first and last bits of rb_CLKPOS are always set, indicating uncertainty at the capture window boundary conditions. CLKIN rising edges are represented by every sequence of two set bits from LSB to MSB, including bits at the boundary conditions. The position of the CLKIN rising edges in the snapshot, along with the CLKIN signal period and the delay step size, can be used to compute the value of SYNC_DLY which maximizes setup and hold times for SYNC signals on the SYNC pins.

7.1.10 R12 Register (Offset = 0xC) [Reset = 0x0000]

R12 is shown in Table 7-12.

Return to the Summary Table.

Table 7-12. R12 Register Field Descriptions

Bit	Field	Type	Reset	Description
15-0	rb_CLKPOS[31:16]	R	0x0	MSB of rb_CLKPOS field.

7.1.11 R13 Register (Offset = 0xD) [Reset = 0x0003]

R13 is shown in Table 7-13.

Return to the Summary Table.

Table 7-13. R13 Register Field Descriptions

Bit	Field	Type	Reset	Description
15-2	UNDISCLOSED	R	0x0	Program this field to 0x0.
1-0	SYNC_DLY_STEP	R/W	0x3	Sets the step size of the delay element used in the SYSNC path, both for SYNC input delay and for clock position captures. The recommended frequency range for each step size creates the maximum number of usable steps for a given CLKIN frequency. The ranges include some overlap to account for process and temperature variations. If the CLKIN frequency is covered by an overlapping span, larger delay step sizes improve the likelihood of detecting a CLKIN rising edge during a clock position capture. However, since larger values include more delay steps, larger step sizes have greater total delay variation across PVT relative to smaller step sizes. 0x0 = 28 ps (1.4GHz to 2.7GHz) 0x1 = 15 ps (2.4GHz to 4.7GHz) 0x2 = 11 ps (3.1GHz to 5.7GHz) 0x3 = 8 ps (4.5GHz to 12.8GHz)

7.1.12 R14 Register (Offset = 0xE) [Reset = 0x0002]

R14 is shown in Table 7-14.

Return to the Summary Table.

Table 7-14. R14 Register Field Descriptions

Bit	Field	Type	Reset	Description
15-3	UNDISCLOSED	R/W	0x0	Program this field to 0x0.

Copyright © 2024 Texas Instruments Incorporated

Table 7-14. R14 Register Field Descriptions (continued)

Bit	Field	Type	Reset	Description
2	CLKPOS_CAPTURE_EN	R/W	0x0	Enables the windowing circuit which captures the clock position in the rb_CLKPOS registers with respect to a SYNC edge. The windowing circuit must be cleared by toggling SYNC_CLR high then low before a clock position capture. The first rising edge on the SYNC pins after clearing the windowing circuit triggers the capture. The capture circuitry greatly increases supply current, and does not need to be enabled to delay the SYNC signal in SYNC mode. Once the desired value of SYNC_DLY is determined, set this bit to 0x0 to minimize current consumption. If SYNC_EN = 0, the value of this bit is ignored, and the windowing circuit is disabled.
1	UNDISCLOSED	R/W	0x1	Program this field to 0x1.
0	SYNC_LATCH	R/W	0x0	Latches the internal SYNC state to logic high on the first rising edge of the SYNC pins. This latch can be cleared by setting SYNC_CLR=1.

7.1.13 R15 Register (Offset = 0xF) [Reset = 0x0B01]

R15 is shown in Table 7-15.

Return to the Summary Table.

Table 7-15. R15 Register Field Descriptions

Bit	Field	Type	Reset	Description
15-12	UNDISCLOSED	R	0x0	Program this field to 0x0.
11-7	UNDISCLOSED	R/W	0x16	Program this field to 0x16.
6-1	SYNC_DLY	R/W	0x0	Sets the delay line step for the external SYNC signal. Each delay line step delays the SYNC signal by an amount equal to SYNC_DLY_STEP x SYNC_DLY_STEP. In SYNC mode, the value for this field can be determined based on the rb_CLKPOS value to satisfy the internal setup and hold time of the SYNC signal with respect to the CLKIN signal. In SYSREF Repeater Mode, the value for this field can be used as a coarse global delay. Values greater than 0x3F are invalid. Since larger values include more delay steps, larger values have greater total step size variation across PVT relative to smaller values. Refer to the data sheet or the device TICS Pro profile for detailed description of the delay step computation procedure.
0	SYNC_CLR	R/W	0x1	Clears SYNC_LATCH and resets synchronization path timing for SYNC signal. Holding this bit high keeps internal SYNC signal low. This bit must be set and cleared once before the SYNC or clock position capture operations are performed.

7.1.14 R23 Register (Offset = 0x17) [Reset = 0x4000]

R23 is shown in Table 7-16.

Return to the Summary Table.

Table 7-16. R23 Register Field Descriptions

Bit	Field	Type	Reset	Description
15	TS_EN	R/W	0x0	Enables the on-die temperature sensor. Temperature sensor counter (TS_CNT_EN) must also be enabled for readback.
14	UNDISCLOSED	R/W	0x1	Program this field to 0x1.
13	MUXOUT_EN	R/W	0x0	Enables or tri-states the MUXOUT pin driver. 0x0 = Tri-States 0x1 = Push-Pull

Copyright © 2024 Texas Instruments Incorporated

Table 7-16. R23 Register Field Descriptions (continued)

Bit	Field	Type	Reset	Description
12-0	UNDISCLOSED	R/W	0x0	Program this field to 0x0.

7.1.15 R24 Register (Offset = 0x18) [Reset = 0x0000]

R24 is shown in Table 7-17.

Return to the Summary Table.

Table 7-17. R24 Register Field Descriptions

Bit	Field	Type	Reset	Description
15-14	UNDISCLOSED	R	0x0	Program this field to 0x0.
13-12	UNDISCLOSED	R/W	0x0	Program this field to 0x0.
11-1	rb_TS	R	0x0	Readback value of on-die temperature sensor.
0	TS_CNT_EN	R/W	0x0	Enables temperature sensor counter. Temperature sensor (TS_EN) must be enabled for accurate data.

7.1.16 R25 Register (Offset = 0x19) [Reset = 0x0211]

R25 is shown in Table 7-18.

Return to the Summary Table.

Table 7-18. R25 Register Field Descriptions

Bit	Field	Type	Reset	Description
15-7	UNDISCLOSED	R/W	0x4	Program this field to 0x4.
6	CLK_DIV_RST	R/W	0x0	Resets the main clock divider. If the clock divider value is changed during operation, set this bit high then low after setting the new divider value. Synchronizing the device with the SYNC pins with SYNC_EN = 0x1 also resets the main clock divider. This bit has no effect when outside of Divider Mode.
5-3	CLK_DIV	R/W	0x2	Sets the clock divider value when CLK_MUX=2 (Divider Mode). The clock divider value is CLK_DIV+1. Valid value for CLK_DIV is 1 to 7. Setting this to 0 disables the main clock divider and reverts to buffer mode.
2-0	CLK_MUX	R/W	0x1	Selects the function for the main clock outputs 0x0 = Reserved 0x1 = Buffer 0x2 = Divider 0x3 = Reserved

7.1.17 R75 Register (Offset = 0x4B) [Reset = 0x0006]

R75 is shown in Table 7-19.

Return to the Summary Table.

Table 7-19. R75 Register Field Descriptions

Bit	Field	Type	Reset	Description
15	rb_CLKOUT2_EN	R	0x0	Readback Pin Status
14	rb_CLKOUT1_EN	R	0x0	Readback Pin Status
13	rb_CLKOUT0_EN	R	0x0	Readback Pin Status
12	rb_MUXSEL1	R	0x0	Readback Pin Status
11-7	UNDISCLOSED	R	0x0	Program this field to 0x0.
6	rb_DIVSEL1	R	0x0	Readback Pin Status

Copyright © 2024 Texas Instruments Incorporated

Table 7-19. R75 Register Field Descriptions (continued)

Bit	Field	Type	Reset	Description
5	rb_DIVSEL0	R	0x0	Readback Pin Status
4	rb_CE	R	0x0	Readback Pin Status
3-0	UNDISCLOSED	R/W	0x6	Program this field to 0x6.

7.1.18 R79 Register (Offset = 0x4F) [Reset = 0x0205]

R79 is shown in Table 7-20.

Return to the Summary Table.

Table 7-20. R79 Register Field Descriptions

Bit	Field	Type	Reset	Description
15	UNDISCLOSED	R	0x0	Program this field to 0x0.
14-0	UNDISCLOSED	R/W	0x205	Program this field to 0x5. Note that this is different than the reset value.

7.1.19 R86 Register (Offset = 0x56) [Reset = 0x0000]

R86 is shown in Table 7-21.

Return to the Summary Table.

Table 7-21. R86 Register Field Descriptions

Bit	Field	Type	Reset	Description
15-3	UNDISCLOSED	R/W	0x0	Program this field to 0x0.
2	MUXOUT_EN_OVRD	R/W	0x0	This bit must be set to 1 to enable MUXOUT_EN to tri-state the MUXOUT pin.
1-0	UNDISCLOSED	R/W	0x0	Program this field to 0x0.

7.1.20 R90 Register (Offset = 0x5A) [Reset = 0x0000]

R90 is shown in Table 7-22.

Return to the Summary Table.

Table 7-22. R90 Register Field Descriptions

Bit	Field	Type	Reset	Description
15-8	UNDISCLOSED	R	0x0	Program this field to 0x0.
7	UNDISCLOSED	R/W	0x0	Program this field to 0x0.
6	AUXCLK_DIV_BYP3	R/W	0x0	Set this bit to 1 if AUXCLK_BYP=1, set to 0 otherwise.
5	AUXCLK_DIV_BYP2	R/W	0x0	Set this bit to 1 if AUXCLK_BYP=1, set to 0 otherwise.
4-0	UNDISCLOSED	R/W	0x0	Program this field to 0x0.

8 Application and Implementation

Note

Information in the following applications sections is not part of the TI component specification, and TI does not warrant its accuracy or completeness. TI's customers are responsible for determining suitability of components for their purposes, as well as validating and testing their design implementation to confirm system functionality.

Copyright © 2024 Texas Instruments Incorporated

8.1 Application Information

8.1.1 SYNC Input Configuration

The SYNC pins support single-ended or differential input in AC or DC coupling mode. The SYNC pins have an internal 50-Ω termination with capacitive ground, which acts as 100-Ω differential.

Figure 8-1 shows the generic SYNC input circuit recommendation to support all AC or DC, single-ended or differential inputs. Some of the discrete components in fig are just placeholder for individual input signal (single-ended or differential input) and AC or DC coupled input.

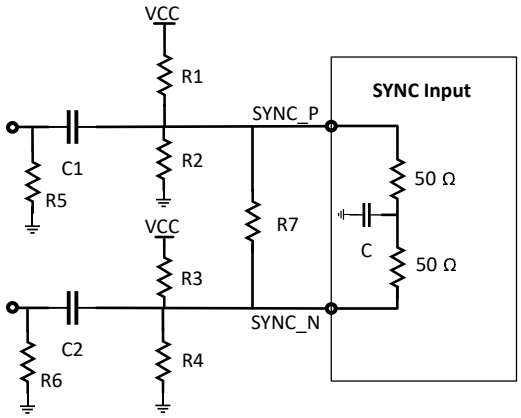

Figure 8-1. SYNC Input Circuit Recommendations

The following figures show the individual circuit diagram for each configurations:

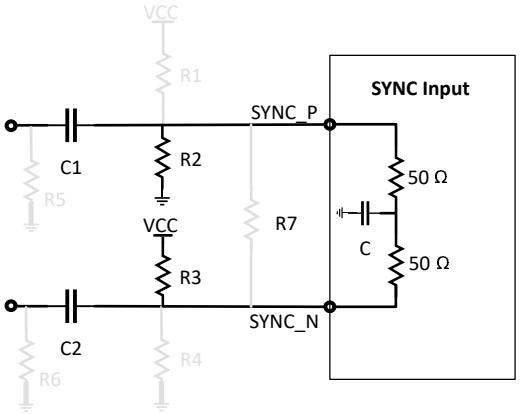

Figure 8-2. AC-Coupled Differential Input

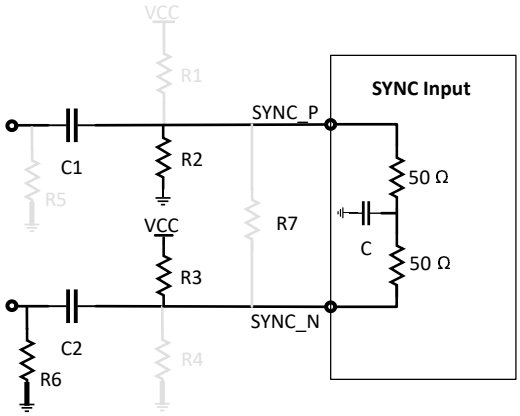

Figure 8-3. AC-Coupled, Single-Ended Input

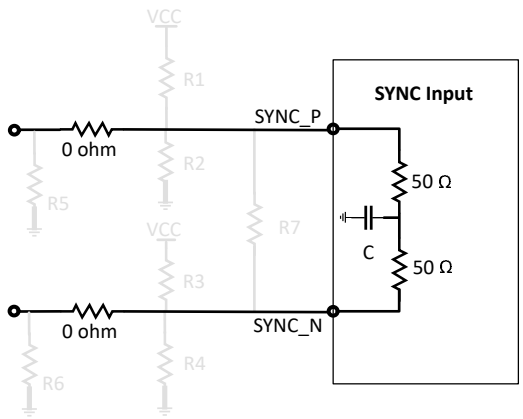

Figure 8-4. DC-Coupled Differential Input

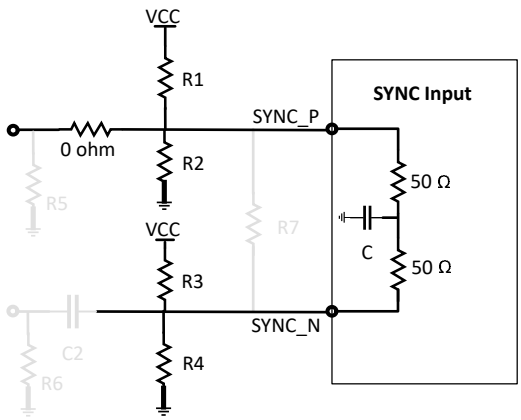

Figure 8-5. DC-Coupled, Single-Ended Input

1. AC coupled differential and single-ended input configurations required the resistor terminations (R2 and R3) to create the VCM at each pin and resistor values must select to maintain greater than 150-mV potential difference between pin P and pin N.
   a. As an example, to create the VCM of 1.5 V at pin P and 1.65 V at pin N, with the 2.5 V VCC, set R3 = 550 Ω and R2 = 1 kΩ.
   b. For single-ended input configuration, place R6 = 50 Ω to avoid any reflection at complementary input pin.
2. DC coupled differential and single-ended input configuration required to have the source common-mode voltage matched with the device input common mode specifications.
   a. For single-ended input configuration, keep the R1, R2, R3 and R4 resistors. This method creates the same common-mode voltage at both pins, and the resistive dividers create 75 Ω at pin P and 50-Ω Thevenin's equivalent at pin N.
   b. As an example, to have the common-mode voltage of 1.35 V at each pin, set the resistive divider components values to R1 = 130 Ω, R2 = 165 Ω, R3 = 86.6 Ω and R4 = 110 Ω with the 2.5-V VCC.

8.1.2 Treatment of Unused Pins

In many cases, not all pins are used. Table 8-1 lists the recommendations on how to handle these unused pins.

Table 8-1. Treatment of Unused or Partially Used Pins

PINS	TREATMENT
All VCC Pins	These pins must always be connected to the power supply. If the block that powers these VCC pins (as implied by the pin name) is not used, then the bypassing can be minimized or eliminated.
SYNC_P / SYNC_N	1. If driving single-ended input, the complementary input must terminates based on Section 8.1.1 2. If the SYNC pins are unused,tie the pins to the VCC with 1-kΩ resistor.
CLKIN_P / CLKIN_N	If driving single-ended input, the complementary input must have an AC-coupling capacitor and 50 Ω to ground.
CLKOUTx_P / CLKOUTx_N	If not used, connect a AC-coupling capacitor and 50 Ω to ground.
AUXCLKOUT_P / AUXCLKOUT_N	If these pins are unused, connect the pins to ground with a 1-kΩ resistor.
CLKx_EN	1. If operating device in SPI controlled mode, these pins must tied to VCC with 1-kΩ resistor. 2. If the respective output channels are not using. the pins must connect to ground with 1-kΩ resistor.
MUXSEL, DIVSELx	If these pins are unused, connect these pins to ground with a 1-kΩ resistor.

Copyright © 2024 Texas Instruments Incorporated

8.1.3 Current Consumption

The current consumption varies as a function of the setup condition. By adding up all the block currents shown in Table 8-2 users can obtain a reasonable estimate of the current for any setup condition.

Table 8-2. Current Consumption per Block

BLOCK		CONDITIONS		CURRENT (mA)
Device Core		CLK_MUX = Buffer Mode		294
		CLK_MUX = Divide Mode		260
SYNC Windowing	Windowing Circuitry	Windowing Circuitry (CLKPOS_CAPTURE_EN=1)		113
CLKOUT (Per active clock channel)	Core			25
	Output Buffer	CLKOUTx_EN=1		4+6*CLKOUTx_PWR
AUXCLKOUT	Core	AUXCLKOUT_EN=1		49
	Output Buffer		CML(R_P=50Ω)	16+1*AUXCLKOUT_PWR
			LVDS	12

8.2 Typical Application

This application shows the low additive noise impact of LMX1214, when the source LMX2820 exports the 6000-MHz clock output to LMX1214 for local oscillator distribution. This particular setup used a single-ended clock to drive the LMX1214 for the sake of simplicity of connecting two EVMs together, but driving the device differentially is generally recommended.

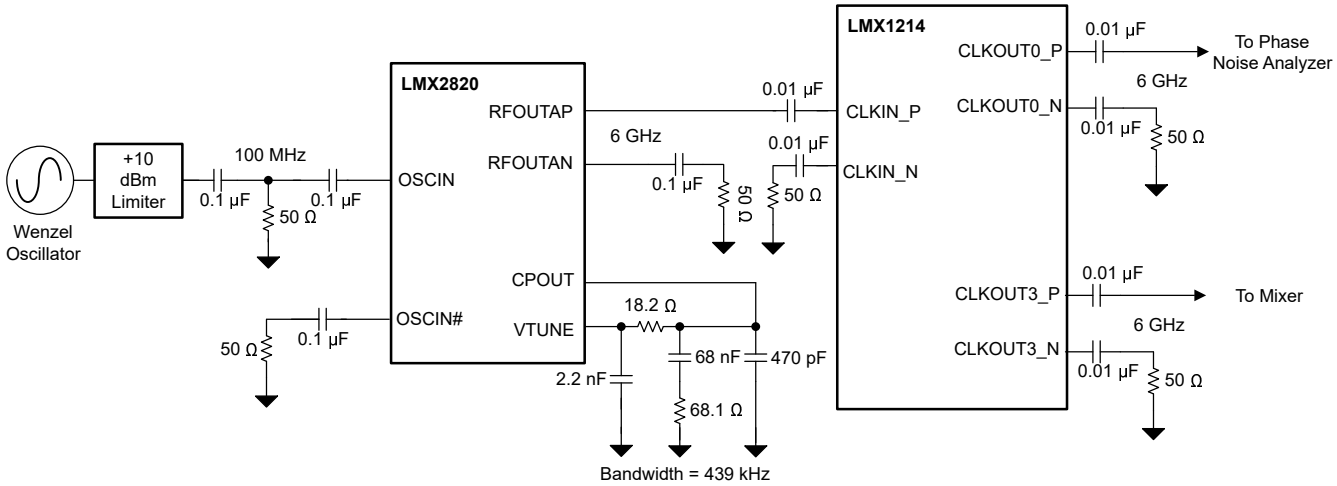

Figure 8-6. Typical Application Schematic

8.2.1 Design Requirements

Design Parameters shows the design parameters for this example.

If not all outputs are used, TI recommends to compress the layout to minimize trace lengths, especially that of the input trace.

Table 8-3. Design Parameters

PARAMETER	VALUE
LMX2820 Input Frequency	100-MHz
LMX2820 Output Frequency	6000-MHz
LMX1214 Input Clock Frequency	6000-MHz
LMX1214 Output Clock Frequency	6000-MHz
LMX1214	Buffer Mode

8.2.2 Detailed Design Procedure

In this example, a 6000-MHz input clock is bypassed to a 6000-MHz output clock. The external components do not change that much based on internal configuration. The TICS Pro software is very useful in calculating the necessary register values and configuring the device.

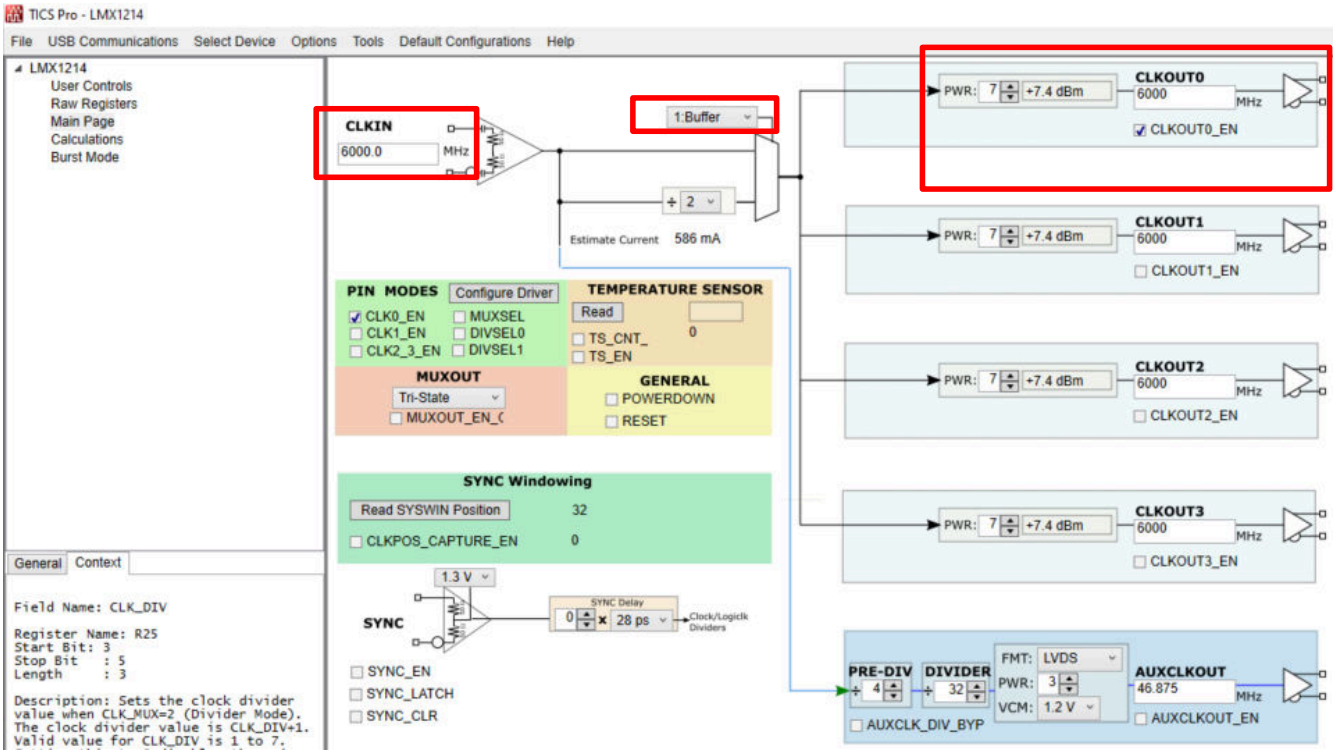

Figure 8-7. LMX1214 TICS Pro Setup

Copyright © 2024 Texas Instruments Incorporated

8.2.3 Application Plots

Figure 8-8 the total plot is the sum of the noise of the LMX1214 buffer mode noise and the LMX2820 6000-MHz output. Note that the LMX1214 follow the same noise curve of LMX2820.

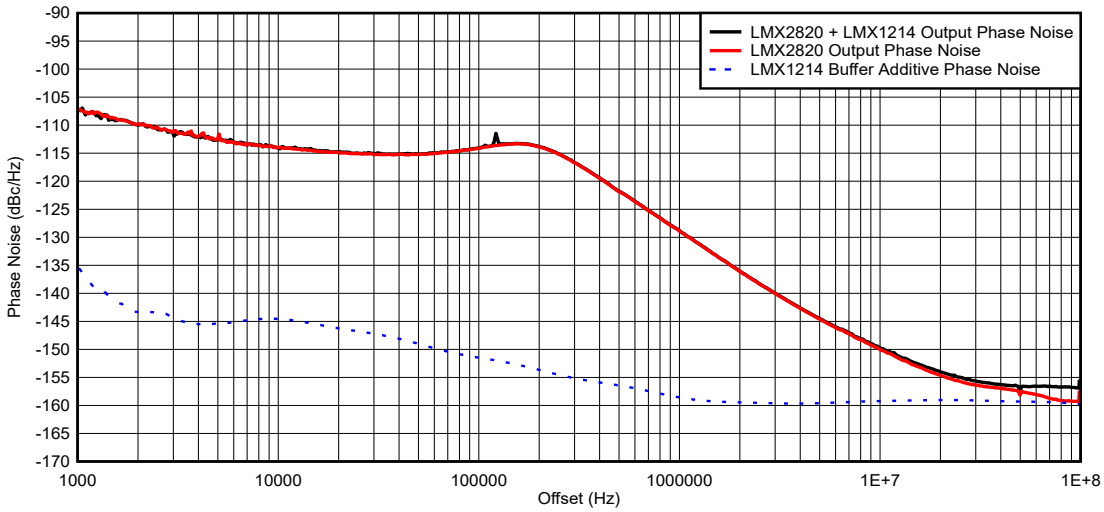

Figure 8-8. LMX1214 Buffer Output

8.3 Power Supply Recommendations

This devices uses a 2.5-V supply for the whole device. A direct connection to a switching power supply likely results in unwanted spurs at the output. Bypassing can be done individually at all the power pins. TI recommends placing smaller capacitors with higher frequency of minimum impedance on the same layer as the device, as close to the pins as possible. The frequencies of nearly all signals in the device are 100 MHz or greater, therefore larger value bypass capacitors with low frequency of minimum impedance are only used for internal LDO stability, and the distance to the device (and the loop inductance of the bypass path) can be larger. Isolate the supply pins for the clocks and the AUXCLKOUT with a small resistor or ferrite bead if both are being used simultaneously. See the *Pin Configuration and Functions* section for additional recommendations for each pin.

Note

This device has minimal PSRR due to the low operating voltage and internal filtering by LDOs. Verifying that this device is connected to a low noise supply that does not have excessive spurious noise is important.

8.4 Layout

8.4.1 Layout Guidelines

- If using a single-ended output, terminate the complementary side with AC coupled to 50 Ω so that the impedance for the signal output is same as complementary pin side.
- GND pins on the outer perimeter of the package can be routed on the package back to the DAP.
- Minimize the length of the CLKIN trace for optimal phase noise. Poor matching can degrade the noise floor.
- Verify that the DAP on the device is well-grounded with many vias.
- Use a low loss dielectric material, such as Rogers 4350B, for optimal output power.
- Be aware that if all the outputs are enabled, the current consumption can be high enough to exceed the recommended internal junction temperature of 125°C; a heat sink can be necessary.

Copyright © 2024 Texas Instruments Incorporated

8.4.2 Layout Example

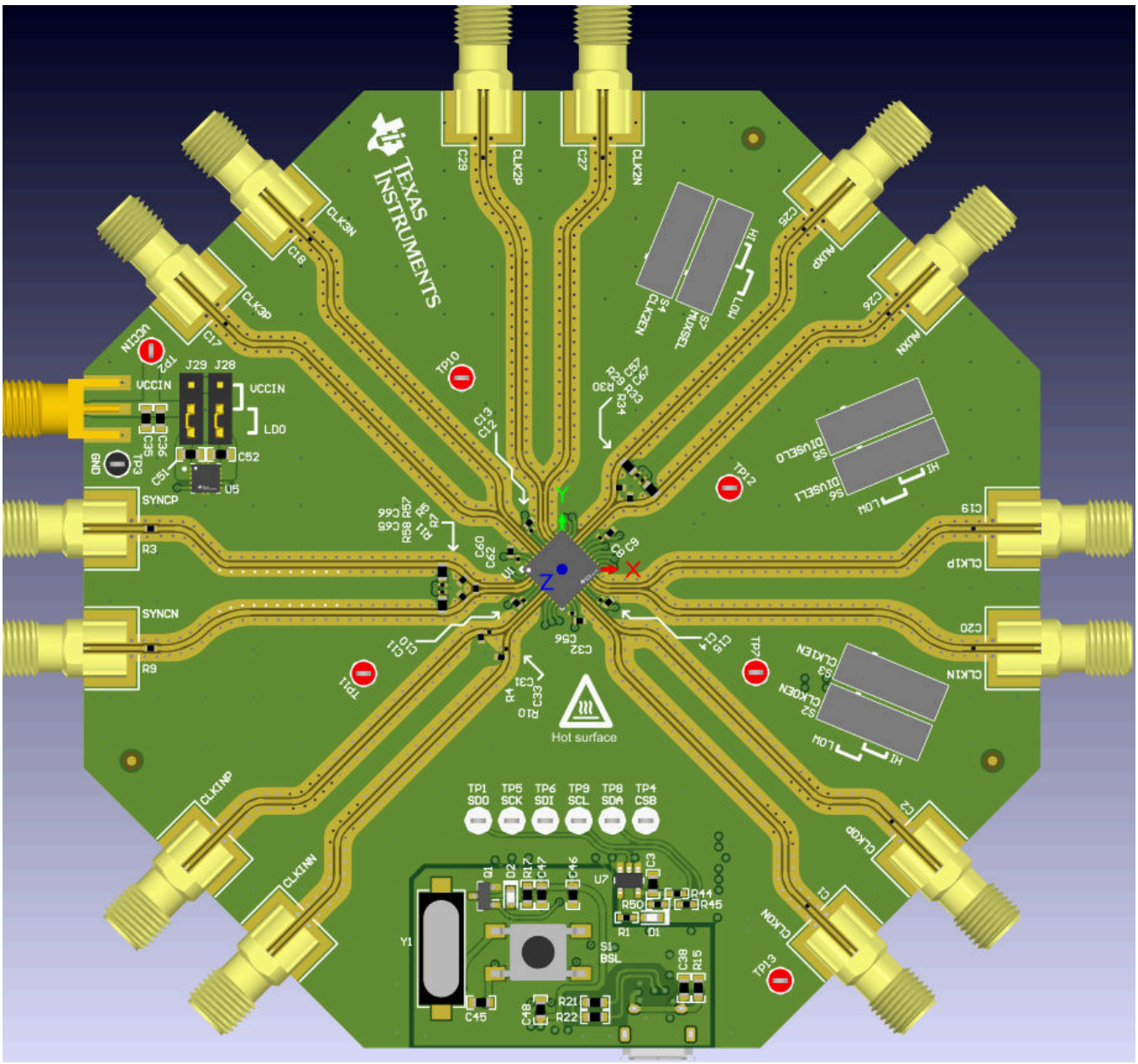

Figure 8-9. Layout Example

9 Device and Documentation Support

9.1 Device Support

TI offers an extensive line of development tools and software to simulate the device performance and program the device.

Table 9-1. Development Tools and Software

TOOL	TYPE	DESCRIPTION
PLLatinum™ Sim	Software	Simulates phase noise in all modes

Copyright © 2024 Texas Instruments Incorporated

Table 9-1. Development Tools and Software (continued)

TOOL	TYPE	DESCRIPTION
TICS Pro	Software	Programs the device with a user-friendly GUI with interactive feedback and hex register export.

9.2 Documentation Support

9.2.1 Related Documentation

Texas Instruments, *LMX1214 Evaluation Module*, EVM user's guide

9.3 Receiving Notification of Documentation Updates

To receive notification of documentation updates, navigate to the device product folder on ti.com. Click on *Notifications* to register and receive a weekly digest of any product information that has changed. For change details, review the revision history included in any revised document.

9.4 Support Resources

TI E2E™ support forums are an engineer's go-to source for fast, verified answers and design help — straight from the experts. Search existing answers or ask your own question to get the quick design help you need.

Linked content is provided "AS IS" by the respective contributors. They do not constitute TI specifications and do not necessarily reflect TI's views; see TI's Terms of Use.

9.5 Trademarks

PLLatinum™ and TI E2E™ are trademarks of Texas Instruments.
All trademarks are the property of their respective owners.

9.6 Electrostatic Discharge Caution

This integrated circuit can be damaged by ESD. Texas Instruments recommends that all integrated circuits be handled with appropriate precautions. Failure to observe proper handling and installation procedures can cause damage.

ESD damage can range from subtle performance degradation to complete device failure. Precision integrated circuits may be more susceptible to damage because very small parametric changes could cause the device not to meet its published specifications.

9.7 Glossary

TI Glossary This glossary lists and explains terms, acronyms, and definitions.

10 Revision History

NOTE: Page numbers for previous revisions may differ from page numbers in the current version.

Changes from Revision * (December 2023) to Revision A (August 2024) — Page

- Changed the buffer and divider mode output max frequency to 18GHz and 8GHz respectively..... 1
- Updated the numbering format for tables, figures, and cross-references throughout the document..... 1
- Changed max. input frequency spec to 18GHz in buffer mode in *Electrical Characteristics clock input* section. 5
- Added output frequency spec in divider-by-2 without sync in *Electrical Characteristics Clock Outputs* section 5
- Changed max. output frequency spec to 18GHz in buffer mode in *Electrical Characteristics Clock Outputs* section..... 5
- Changed output power value in *Electrical Characteristics Clock Outputs* section..... 5
- Test conditions added in *Electrical Characteristics leakage power spec* 5
- Test conditions added in *Electrical Characteristics leakage power spec*.....5
- Updated the *LMX1214 Flicker Noise at 6 GHz* and *Noise Floor in Buffer Mode* figures.....9
- added LMX1214 evaluation module user's guide link in Related Documentation.....35

11 Mechanical, Packaging, and Orderable Information

The following pages include mechanical, packaging, and orderable information. This information is the most current data available for the designated devices. This data is subject to change without notice and revision of this document. For browser-based versions of this data sheet, refer to the left-hand navigation.

Copyright © 2024 Texas Instruments Incorporated

PACKAGE OUTLINE

RHA0040C

VQFN - 1 mm max height

PLASTIC QUAD FLATPACK - NO LEAD

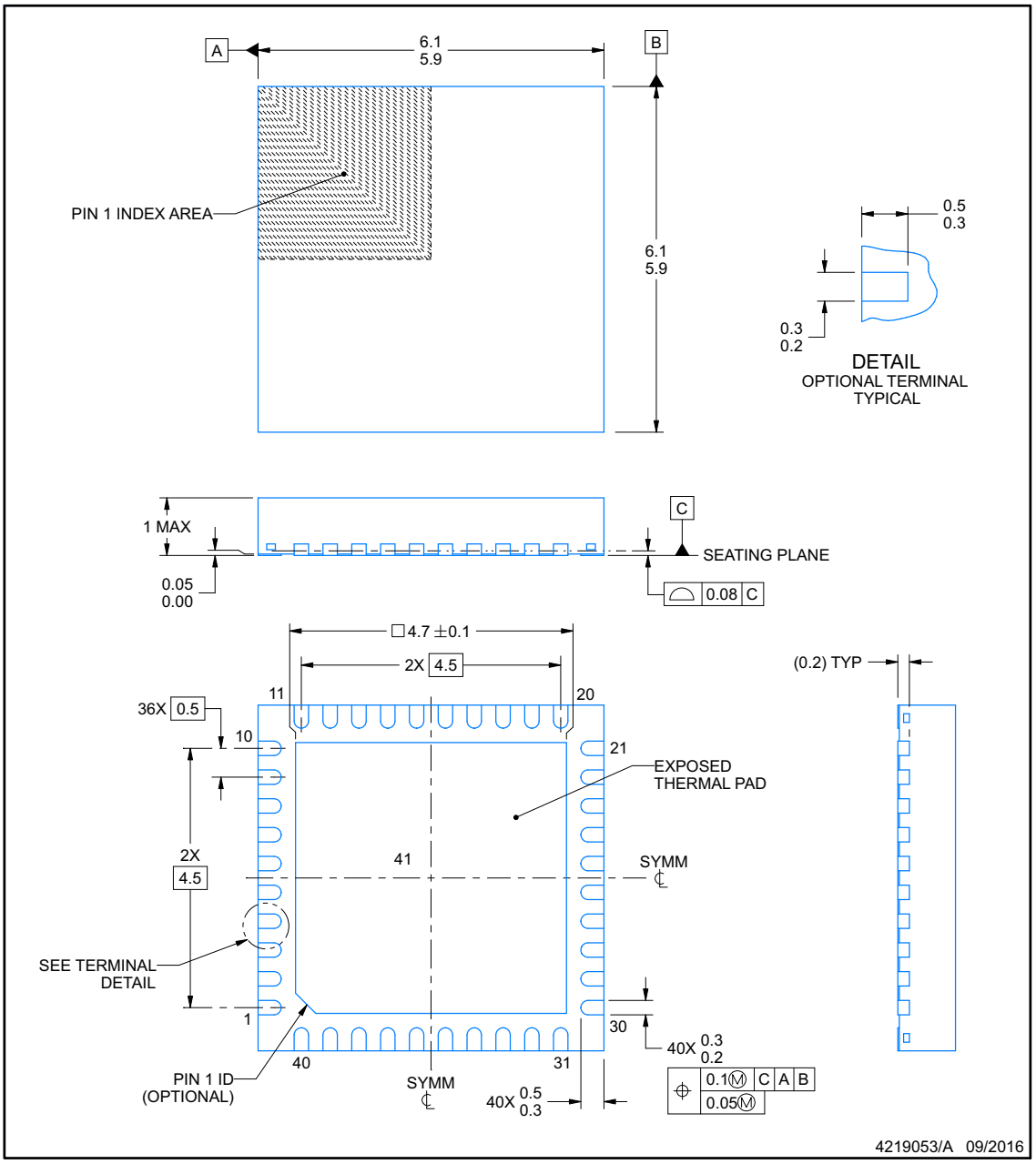

NOTES:

1. All linear dimensions are in millimeters. Any dimensions in parenthesis are for reference only. Dimensioning and tolerancing per ASME Y14.5M.
2. This drawing is subject to change without notice.
3. The package thermal pad must be soldered to the printed circuit board for thermal and mechanical performance.

Copyright © 2024 Texas Instruments Incorporated

EXAMPLE BOARD LAYOUT

RHA0040C

VQFN - 1 mm max height

PLASTIC QUAD FLATPACK - NO LEAD

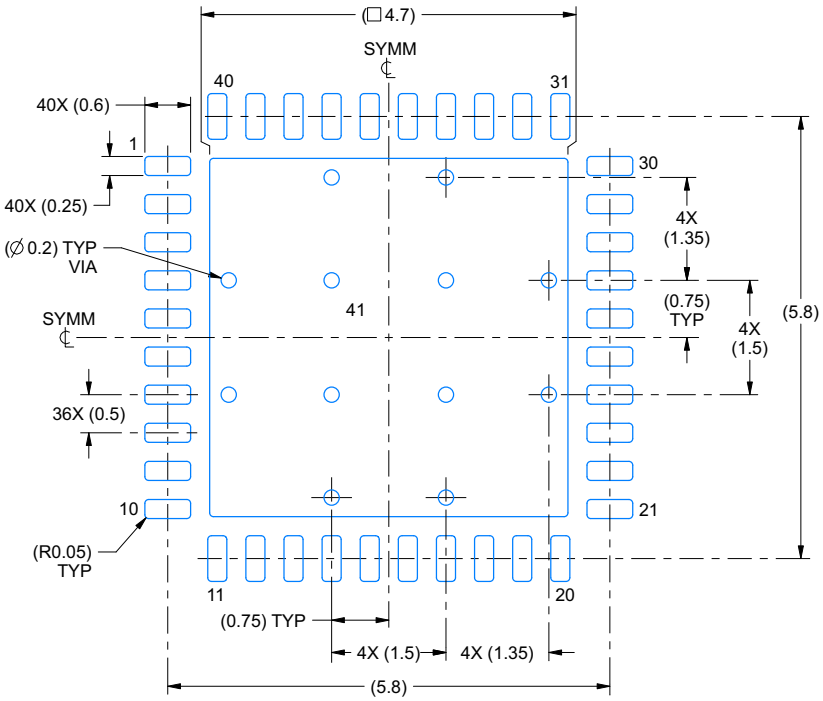

LAND PATTERN EXAMPLE
SCALE:12X

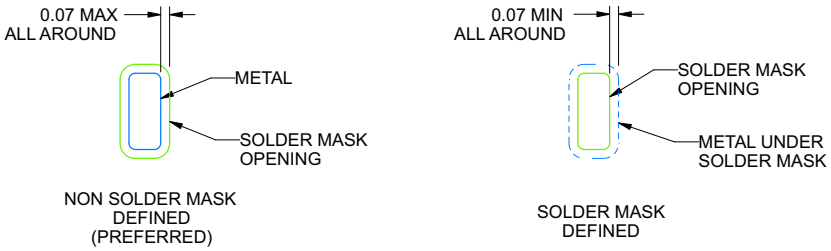

SOLDER MASK DETAILS

4219053/A 09/2016

NOTES: (continued)

4. This package is designed to be soldered to a thermal pad on the board. For more information, see Texas Instruments literature number SLUA271 (www.ti.com/lit/slua271).
5. Vias are optional depending on application, refer to device data sheet. If any vias are implemented, refer to their locations shown on this view. It is recommended that vias under paste be filled, plugged or tented.

Copyright © 2024 Texas Instruments Incorporated

EXAMPLE STENCIL DESIGN

RHA0040C **VQFN - 1 mm max height**

PLASTIC QUAD FLATPACK - NO LEAD

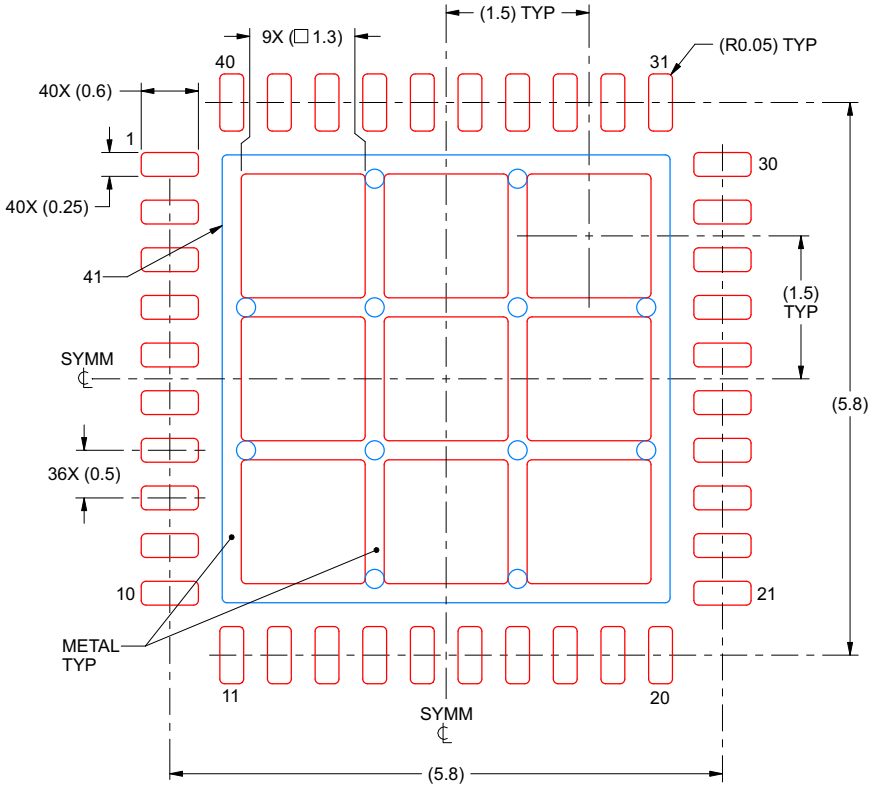

SOLDER PASTE EXAMPLE
BASED ON 0.125 mm THICK STENCIL

EXPOSED PAD 41:
69% PRINTED SOLDER COVERAGE BY AREA
SCALE:15X

4219053/A 09/2016

NOTES: (continued)

6. Laser cutting apertures with trapezoidal walls and rounded corners may offer better paste release. IPC-7525 may have alternate design recommendations.

Copyright © 2024 Texas Instruments Incorporated

11.1 Tape and Reel Information

REEL DIMENSIONS

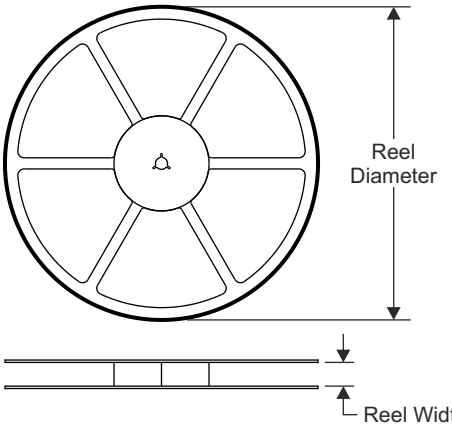

TAPE DIMENSIONS

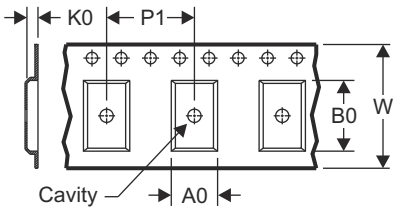

A0	Dimension designed to accommodate the component width
B0	Dimension designed to accommodate the component length
K0	Dimension designed to accommodate the component thickness
W	Overall width of the carrier tape
P1	Pitch between successive cavity centers

QUADRANT ASSIGNMENTS FOR PIN 1 ORIENTATION IN TAPE

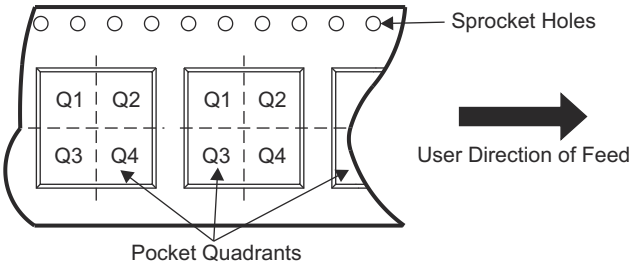

Device	Package Type	Package Drawing	Pins	SPQ	Reel Diameter (mm)	Reel Width W1 (mm)	A0 (mm)	B0 (mm)	K0 (mm)	P1 (mm)	W (mm)	Pin1 Quadrant
MX1214RHAR	VQFN	RHA	40	2500	330	16.4	6.3	6.3	1.1	12	16	Q2
LMX1214RHAT	VQFN	RHA	40	250	180	16.4	6.3	6.3	1.1	12	16	Q2

Copyright © 2024 Texas Instruments Incorporated

TAPE AND REEL BOX DIMENSIONS

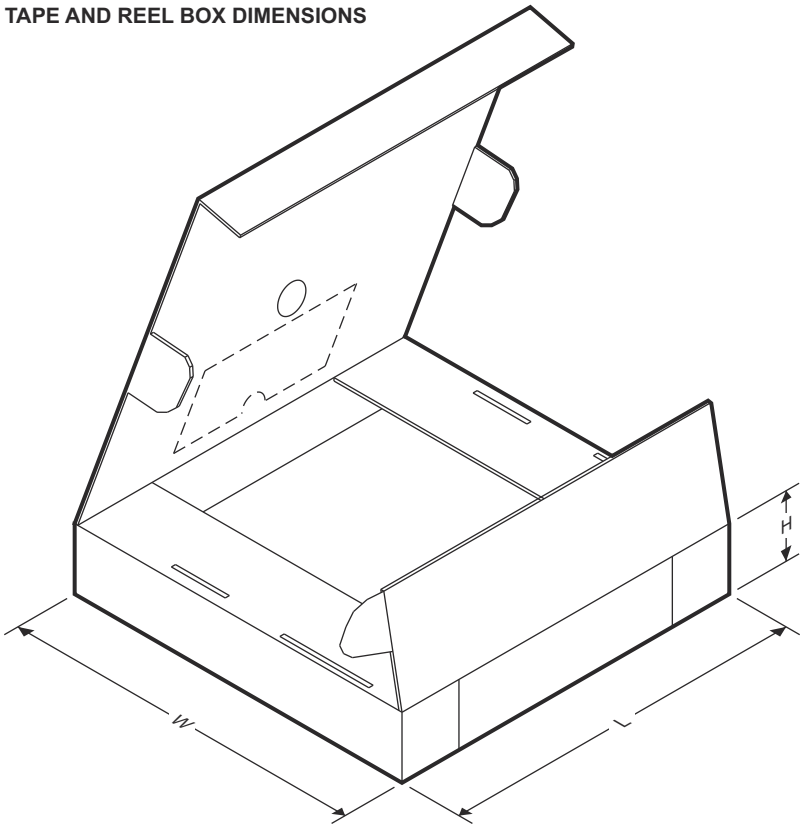

Device	Package Type	Package Drawing	Pins	SPQ	Length (mm)	Width (mm)	Height (mm)
LMX1214RHAR	VQFN	RHA	40	2500	367	367	38
LMX1214RHAT	VQFN	RHA	40	250	210	185	35

PACKAGING INFORMATION

Orderable part number	Status (1)	Material type (2)	Package | Pins	Package qty | Carrier	RoHS (3)	Lead finish/ Ball material (4)	MSL rating/ Peak reflow (5)	Op temp (°C)	Part marking (6)
LMX1214RHAR	Active	Production	VQFN (RHA) | 40	2500 | LARGE T&R	Yes	NIPDAUAG	Level-3-260C-168 HR	-40 to 85	LMX1214
LMX1214RHAR.A	Active	Production	VQFN (RHA) | 40	2500 | LARGE T&R	Yes	NIPDAUAG	Level-3-260C-168 HR	-40 to 85	LMX1214
LMX1214RHAT	Active	Production	VQFN (RHA) | 40	250 | SMALL T&R	Yes	NIPDAUAG	Level-3-260C-168 HR	-40 to 85	LMX1214
LMX1214RHAT.A	Active	Production	VQFN (RHA) | 40	250 | SMALL T&R	Yes	NIPDAUAG	Level-3-260C-168 HR	-40 to 85	LMX1214

(1) **Status:** For more details on status, see our product life cycle.

(2) **Material type:** When designated, preproduction parts are prototypes/experimental devices, and are not yet approved or released for full production. Testing and final process, including without limitation quality assurance, reliability performance testing, and/or process qualification, may not yet be complete, and this item is subject to further changes or possible discontinuation. If available for ordering, purchases will be subject to an additional waiver at checkout, and are intended for early internal evaluation purposes only. These items are sold without warranties of any kind.

(3) **RoHS values:** Yes, No, RoHS Exempt. See the TI RoHS Statement for additional information and value definition.

(4) **Lead finish/Ball material:** Parts may have multiple material finish options. Finish options are separated by a vertical ruled line. Lead finish/Ball material values may wrap to two lines if the finish value exceeds the maximum column width.

(5) **MSL rating/Peak reflow:** The moisture sensitivity level ratings and peak solder (reflow) temperatures. In the event that a part has multiple moisture sensitivity ratings, only the lowest level per JEDEC standards is shown. Refer to the shipping label for the actual reflow temperature that will be used to mount the part to the printed circuit board.

(6) **Part marking:** There may be an additional marking, which relates to the logo, the lot trace code information, or the environmental category of the part.

Multiple part markings will be inside parentheses. Only one part marking contained in parentheses and separated by a "~" will appear on a part. If a line is indented then it is a continuation of the previous line and the two combined represent the entire part marking for that device.

Important Information and Disclaimer: The information provided on this page represents TI's knowledge and belief as of the date that it is provided. TI bases its knowledge and belief on information provided by third parties, and makes no representation or warranty as to the accuracy of such information. Efforts are underway to better integrate information from third parties. TI has taken and continues to take reasonable steps to provide representative and accurate information but may not have conducted destructive testing or chemical analysis on incoming materials and chemicals. TI and TI suppliers consider certain information to be proprietary, and thus CAS numbers and other limited information may not be available for release.

In no event shall TI's liability arising out of such information exceed the total purchase price of the TI part(s) at issue in this document sold by TI to Customer on an annual basis.

TAPE AND REEL INFORMATION

REEL DIMENSIONS

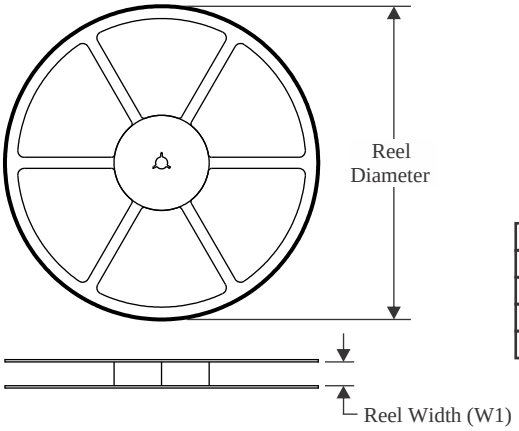

TAPE DIMENSIONS

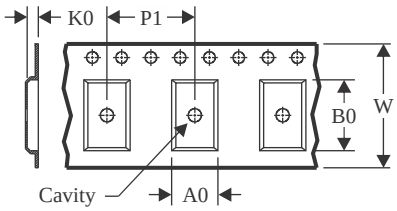

A0	Dimension designed to accommodate the component width
B0	Dimension designed to accommodate the component length
K0	Dimension designed to accommodate the component thickness
W	Overall width of the carrier tape
P1	Pitch between successive cavity centers

QUADRANT ASSIGNMENTS FOR PIN 1 ORIENTATION IN TAPE

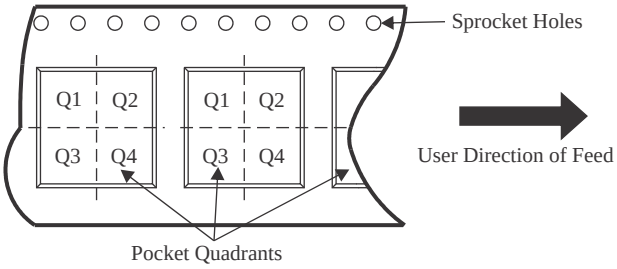

*All dimensions are nominal

Device	Package Type	Package Drawing	Pins	SPQ	Reel Diameter (mm)	Reel Width W1 (mm)	A0 (mm)	B0 (mm)	K0 (mm)	P1 (mm)	W (mm)	Pin1 Quadrant
LMX1214RHAR	VQFN	RHA	40	2500	330.0	16.4	6.3	6.3	1.1	12.0	16.0	Q2
LMX1214RHAT	VQFN	RHA	40	250	180.0	16.4	6.3	6.3	1.1	12.0	16.0	Q2

TAPE AND REEL BOX DIMENSIONS

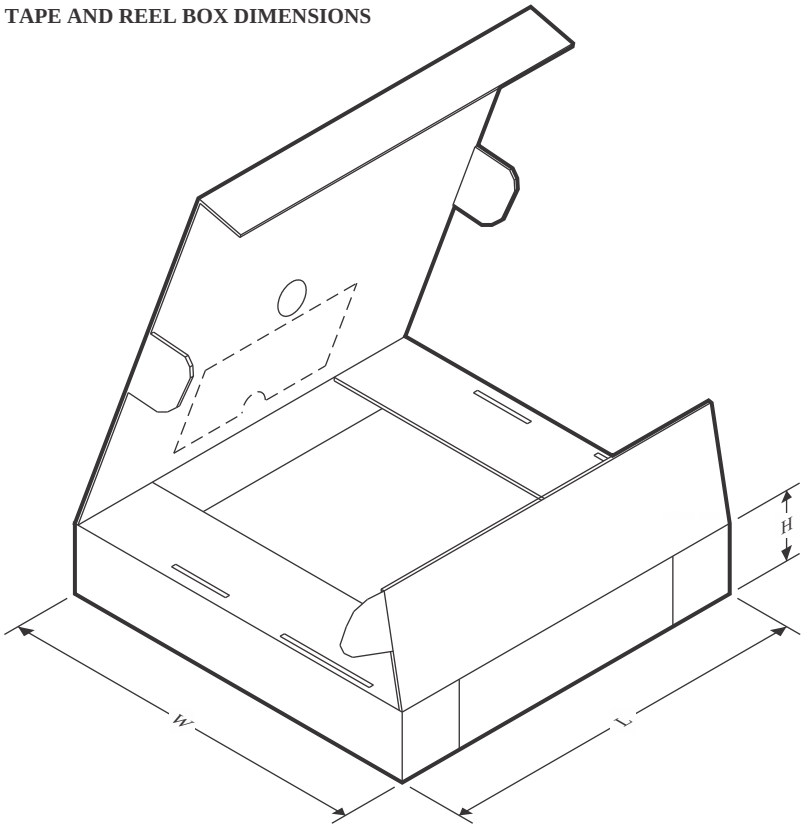

*All dimensions are nominal

Device	Package Type	Package Drawing	Pins	SPQ	Length (mm)	Width (mm)	Height (mm)
LMX1214RHAR	VQFN	RHA	40	2500	367.0	367.0	38.0
LMX1214RHAT	VQFN	RHA	40	250	210.0	185.0	35.0

GENERIC PACKAGE VIEW

RHA 40

VQFN - 1 mm max height

6 x 6, 0.5 mm pitch

PLASTIC QUAD FLATPACK - NO LEAD

This image is a representation of the package family, actual package may vary.
Refer to the product data sheet for package details.

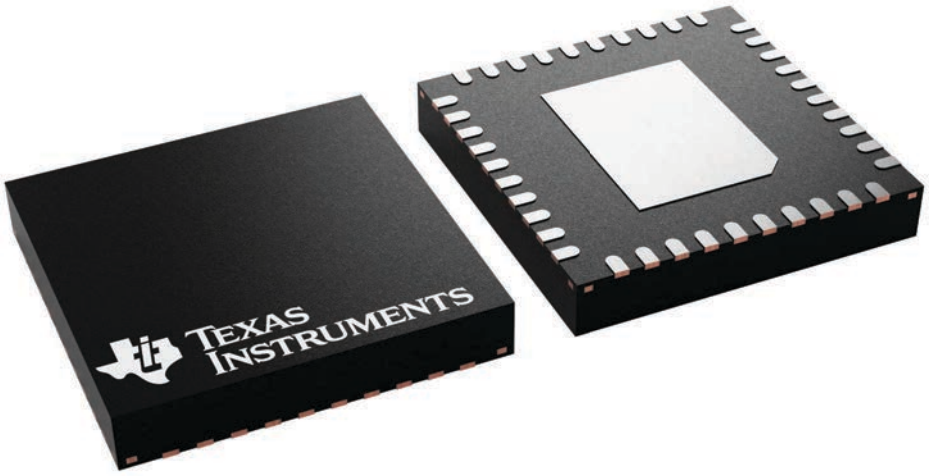

4225870/A

RHA0040C

PACKAGE OUTLINE

VQFN - 1 mm max height

PLASTIC QUAD FLATPACK - NO LEAD

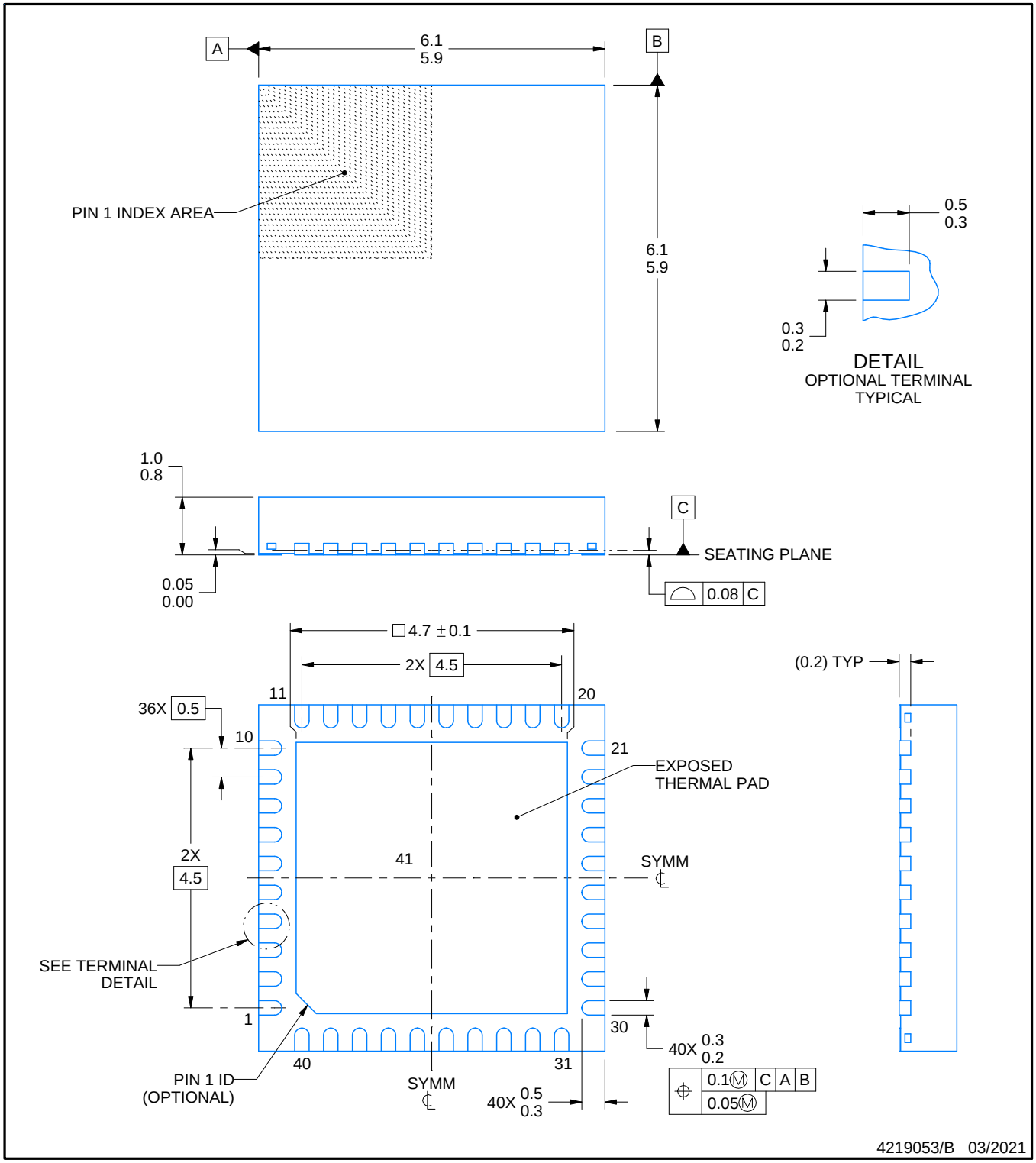

NOTES:

1. All linear dimensions are in millimeters. Any dimensions in parenthesis are for reference only. Dimensioning and tolerancing per ASME Y14.5M.
2. This drawing is subject to change without notice.
3. The package thermal pad must be soldered to the printed circuit board for thermal and mechanical performance.

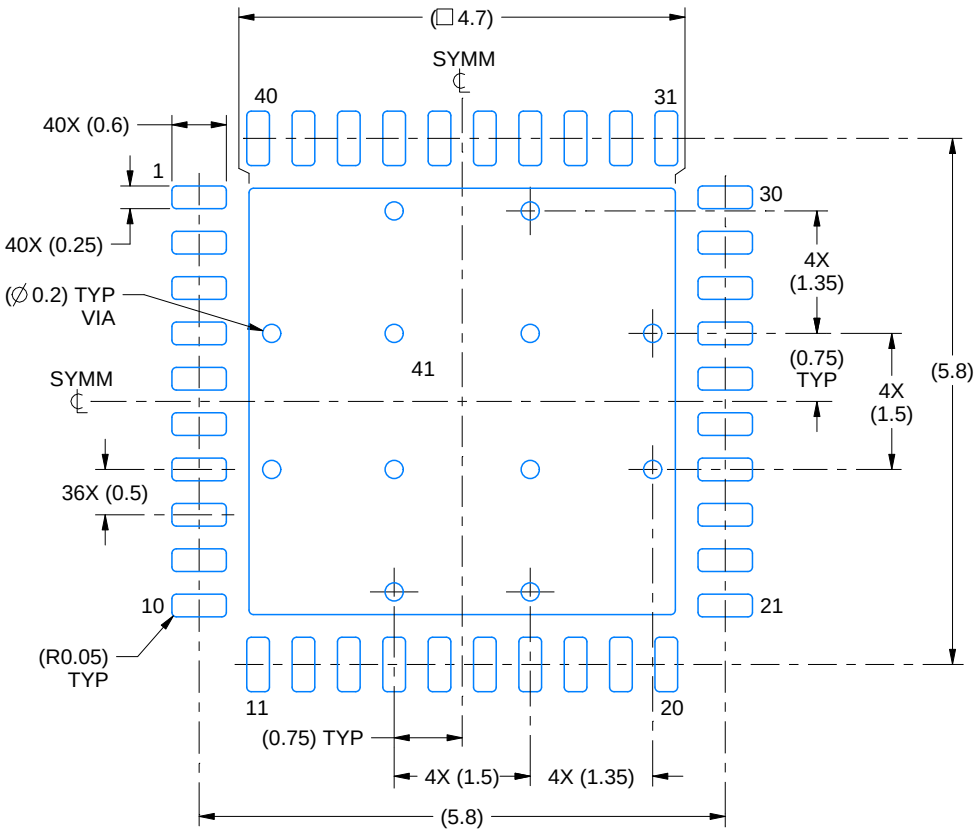

LAND PATTERN EXAMPLE
SCALE:12X

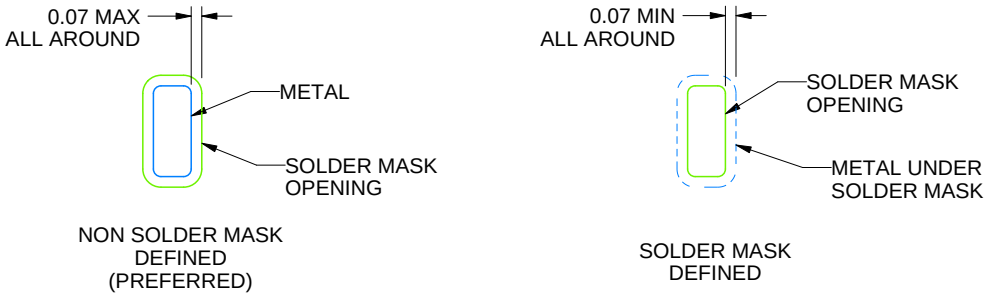

SOLDER MASK DETAILS

4219053/B 03/2021

NOTES: (continued)

4. This package is designed to be soldered to a thermal pad on the board. For more information, see Texas Instruments literature number SLUA271 (www.ti.com/lit/slua271).
5. Vias are optional depending on application, refer to device data sheet. If any vias are implemented, refer to their locations shown on this view. It is recommended that vias under paste be filled, plugged or tented.

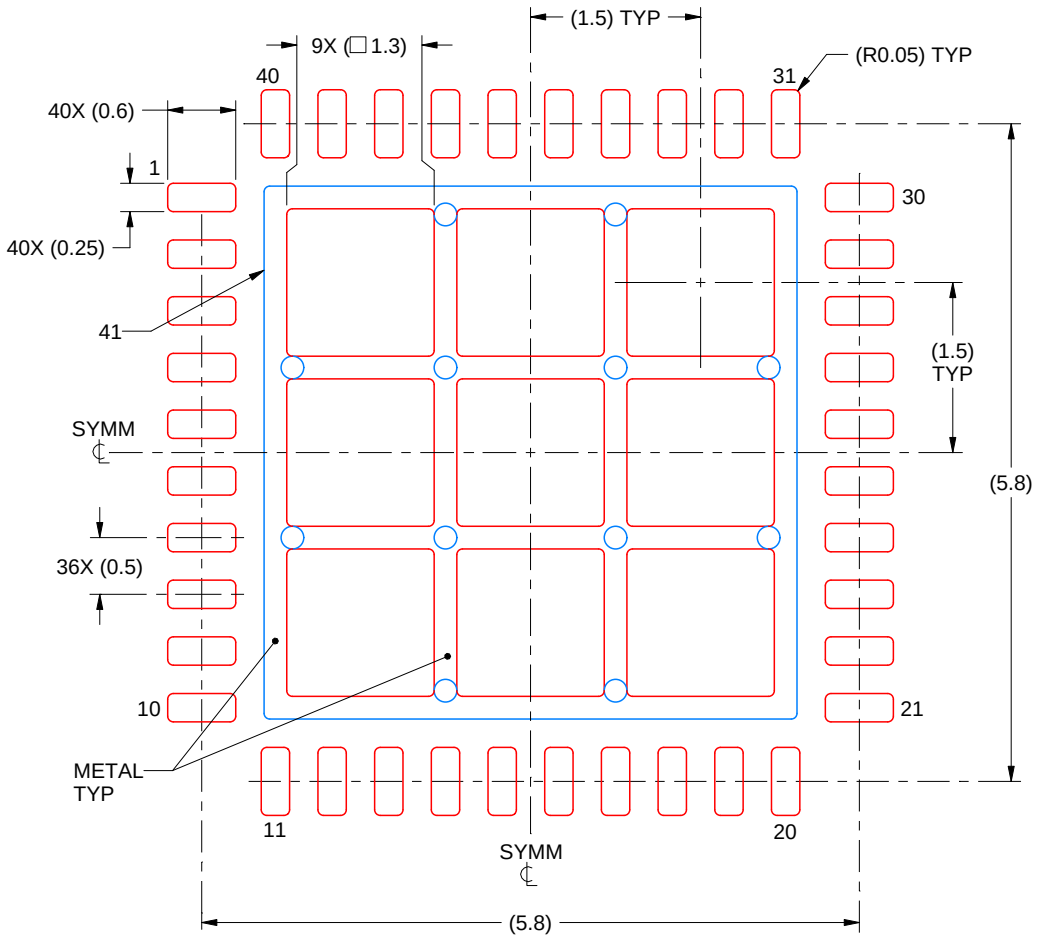

SOLDER PASTE EXAMPLE
BASED ON 0.125 mm THICK STENCIL

EXPOSED PAD 41:
69% PRINTED SOLDER COVERAGE BY AREA
SCALE:15X

4219053/B 03/2021

NOTES: (continued)

6. Laser cutting apertures with trapezoidal walls and rounded corners may offer better paste release. IPC-7525 may have alternate design recommendations.

IMPORTANT NOTICE AND DISCLAIMER

TI PROVIDES TECHNICAL AND RELIABILITY DATA (INCLUDING DATASHEETS), DESIGN RESOURCES (INCLUDING REFERENCE DESIGNS), APPLICATION OR OTHER DESIGN ADVICE, WEB TOOLS, SAFETY INFORMATION, AND OTHER RESOURCES “AS IS” AND WITH ALL FAULTS, AND DISCLAIMS ALL WARRANTIES, EXPRESS AND IMPLIED, INCLUDING WITHOUT LIMITATION ANY IMPLIED WARRANTIES OF MERCHANTABILITY, FITNESS FOR A PARTICULAR PURPOSE OR NON-INFRINGEMENT OF THIRD PARTY INTELLECTUAL PROPERTY RIGHTS.

These resources are intended for skilled developers designing with TI products. You are solely responsible for (1) selecting the appropriate TI products for your application, (2) designing, validating and testing your application, and (3) ensuring your application meets applicable standards, and any other safety, security, regulatory or other requirements.

These resources are subject to change without notice. TI grants you permission to use these resources only for development of an application that uses the TI products described in the resource. Other reproduction and display of these resources is prohibited. No license is granted to any other TI intellectual property right or to any third party intellectual property right. TI disclaims responsibility for, and you fully indemnify TI and its representatives against any claims, damages, costs, losses, and liabilities arising out of your use of these resources.

TI’s products are provided subject to TI’s Terms of Sale, TI’s General Quality Guidelines, or other applicable terms available either on ti.com or provided in conjunction with such TI products. TI’s provision of these resources does not expand or otherwise alter TI’s applicable warranties or warranty disclaimers for TI products. Unless TI explicitly designates a product as custom or customer-specified, TI products are standard, catalog, general purpose devices.

TI objects to and rejects any additional or different terms you may propose.

Copyright © 2026, Texas Instruments Incorporated

Last updated 10/2025