MC121 40V, Single Phase BLDC Driver with Integrated Hall Sensor

1 Features

- N-channel H-bridge driver with internal Hall sensor
- $R_{DS(ON)}$: 850mΩ (HS+LS)
- Current rating
  - Configurable current limit up to 1.21A
  - 0.6A rms (T_A = 85ºC, $R_{\theta JA}$ = 100ºC/W)
- Integrated supply (VM) clamp
- Configurable speed curve and starting duty cycle
- Commutation schemes: square or soft (up to 90º)
  - Square: maximum torque/speed
  - Soft: optimized speed and acoustics
- Configurable speed reference input: PWM or DC
  - Input PWM frequency range: 20Hz to 90kHz
  - Input DC voltage range: (0-3)V
- Configurable output PWM frequency: 25 or 50kHz
- Closed loop speed control accuracy: ±3%
- PWM dithering to reduce EMI
- Configurable soft start time
- Configurable hall offset angle and time
- Speed output with 0.5x, 1x, 2/3x, or 2x multipliers
- Rotor lock detection and fault output (RD)
- Configurable PWM modes
  - Hybrid, synchronous, and asynchronous
- Auto-demag for high efficiency across speed
- One-time programming (2 pages) over I^2C
- Protection features
  - Output Overcurrent protection with auto-restart
  - Locked rotor protection (LRP) with auto-restart
  - VM undervoltage lockout (UVLO)
  - VM overvoltage protection (OVP)
  - Thermal shutdown (TSD)
  - Configurable fault retry time
- Functional features (Operation continues)
  - when FG/RD shorts GND
  - when PWM/DC shorts to VM

2 Applications

- Industrial equipment cooling fans
- Ventilation and Exhaust fans
- Appliance cooling fans
- Medical equipment fans
- Power supply cooling fans
- Blowers

3 Description

The MC121 is a 40V, 850mΩ rated motor driver with integrated N-channel full-bridge MOSFETs, charge pump, hall sensor, commutation control logic, and protection circuitry for single phase brushless DC motors. The hall sensor provides rotor position information to the commutation logic to maintain continuous rotor motion. The commutation logic can be programmed for square and soft PWM waveforms to reduce acoustic noise or maximize speed/efficiency.

The duty cycle of a pulse-width modulated signal or a (0-3)V DC voltage on the PWM/DC pin controls the motor speed. FG/RD pin can be configured to report the motor speed, a locked rotor condition, or fault to an external controller. The PWM/DC and FG/RD pins can be also configured as an I^2C interface to support a programming (OTP) mode to configure the OTP during production.

The MC121 integrates protection features for motor and device protection. These include supply undervoltage lockout, overvoltage protection, output overcurrent protection, device overtemperature shutdown, and locked rotor protection.

The MC121 is available in two 6-pin packages: SOT23-THN and X2SON. SOT23-THN is a flat lead package with a maximum height of 1.1mm. X2SON is a non-leaded package with a maximum height of 0.4mm.

Packaging Information

PART NUMBER	PACKAGE(1)	PACKAGE SIZE (2)
MC121DEZR	X2SON (6)	2.50mm × 2.00mm
MC121DYMR(3)	SOT23-THN (6)	3.80mm × 2.90mm

(1) For all available packages, see the orderable addendum at the end of the data sheet.
(2) The package size (length × width) is a nominal value and includes pins, where applicable.
(3) This device is advanced information.

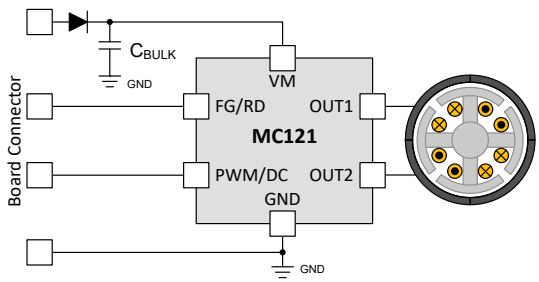

Simplified Schematic

An IMPORTANT NOTICE at the end of this data sheet addresses availability, warranty, changes, use in safety-critical applications, intellectual property matters and other important disclaimers. PRODUCTION DATA.

Table of Contents

1 Features....1
2 Applications....1
3 Description....1
4 Pin Configuration and Functions....3
5 Specifications....4
5.1 Absolute Maximum Ratings....4
5.2 ESD Ratings....4
5.3 Recommended Operating Conditions....4
5.4 Thermal Information....4
5.5 Electrical Characteristics....5
5.6 I2C Timing Requirements....9
5.7 Timing Diagrams....10
6 Detailed Description....11
6.1 Overview....11
6.2 Functional Block Diagram....11
6.3 Feature Description....11
6.4 Device Functional Modes....28
6.5 Programming....30
7 Register Map....32
7.1 USR_OTP Registers....33
7.2 USR_TM Registers....62
8 Application and Implementation....70
8.1 Application Information....70
8.2 Typical Application....72
8.3 Power Supply Recommendations....74
8.4 Layout....75
8.5 Hall Element Position....77
9 Device and Documentation Support....79
9.1 Device Support....79
9.2 Documentation Support....79
9.3 Receiving Notification of Documentation Updates....79
9.4 Support Resources....79
9.5 Trademarks....79
9.6 Electrostatic Discharge Caution....79
9.7 Glossary....79
10 Revision History....79
11 Mechanical, Packaging, and Orderable Information....79

Copyright © 2026 Texas Instruments Incorporated

4 Pin Configuration and Functions

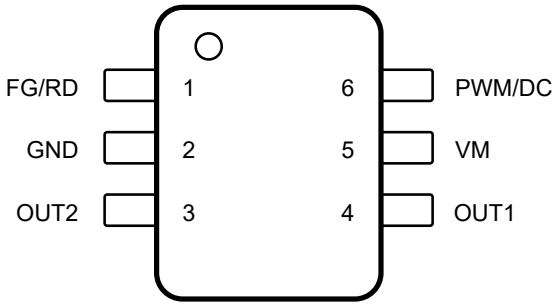

Figure 4-1. MC121, 6-Pin SOT23-THN, Top View

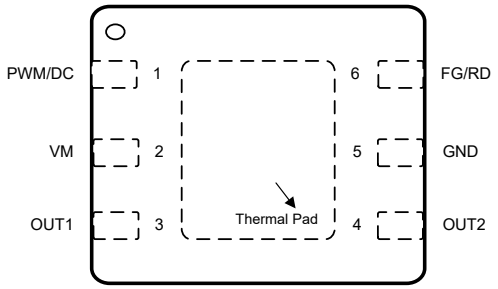

Figure 4-2. MC121, 6-Pin X2SON, Top View

Table 4-1. Pin Functions

PIN	PACKAGE		TYPE[(1)]	DESCRIPTION
NAME	SOT23-THN	X2SON		
FG/RD	1	6	O	Motor speed, rotor lock, or fault indicator output. Open-drain output that requires an external pull-up resistor to desired logic-high voltage. In test/programming mode, this pin becomes the SDA pin for I^2C interface.
GND	2	5	G	Device ground. Connect to system ground.
OUT1	4	3	O	Half-bridge output. Connect to motor winding.
OUT2	3	4	O	Half-bridge output. Connect to motor winding.
VM	5	2	P	Device and motor power supply. Connect to motor supply voltage; bypass to GND with one 0.1-µF capacitor and one bulk capacitor. TI recommends a capacitor voltage rating at least twice the normal operating voltage of the device.
PWM/DC	6	1	I	Motor speed control pin - can take a PWM or DC signal. This pin is internally pulled up to 100% duty cycle input when left floating in PWM input mode (PWMDC_MODE = 0x0). In test/programming mode, this pin becomes the SCL pin for I^2C interface.
Thermal pad	N/A		G	Must be connected to ground.

(1) I = Input, O = Output, I/O = Input or Output, G = Ground, P = Power, NC = no connect.

Copyright © 2026 Texas Instruments Incorporated

5 Specifications

5.1 Absolute Maximum Ratings

over operating temperature range (unless otherwise noted)[1]

		MIN	MAX	UNIT
Power supply pin voltage	VM	–0.5	V_{CLAMP}	V
Power supply transient voltage ramp	VM		2	V/µs
Logic pin voltage	PWM/DC	–0.5	V_{VM} + 0.5	V
Open drain pin voltage	FG/RD	–0.5	V_{VM} + 0.5	V
Output pin voltage	OUTx	–1	V_{VM} + 1	V
Peak Output Current (OUTx)	OUTx		1.44	A
Open drain output current	FG/RD		25	mA
Ambient temperature, T_A		–40	125	°C
Junction temperature, T_J		–40	150	°C
Storage temperature, T_{stg}		–65	150	°C

(1) Operation outside the Absolute Maximum Ratings may cause permanent device damage. Absolute Maximum Ratings do not imply functional operation of the device at these or any other conditions beyond those listed under Recommended Operating Conditions. If used outside the Recommended Operating Conditions but within the Absolute Maximum Ratings, the device may not be fully functional, and this may affect device reliability, functionality, performance, and shorten the device lifetime.

5.2 ESD Ratings

			VALUE	UNIT
$V_{(ESD)}$	Electrostatic discharge	Human body model (HBM), per ANSI/ESDA/JEDEC JS-001[1]	±6000	V
		Charged device model (CDM), per ANSI/ESDA/JEDEC JS-002[2]	±1000	

(1) JEDEC document JEP155 states that 500V HBM allows safe manufacturing with a standard ESD control process.
(2) JEDEC document JEP157 states that 250V CDM allows safe manufacturing with a standard ESD control process.

5.3 Recommended Operating Conditions

over operating temperature range (unless otherwise noted)

			MIN	NOM	MAX	UNIT
V_{VM}	Power supply voltage	VM	3.2		35	V
V_{IN}	Logic input voltage	PWM/DC (when configured in PWM mode)	0		V_{VM}	V
V_{IN}	Analog input voltage	PWM/DC (when configured in DC mode)	0		3.2	V
f_{PWM_IN}	PWM frequency	PWM	0.02		90	kHz
V_{OD}	Open drain pullup voltage	FG/RD	0		V_{VM}	V
I_{OD}	Open drain output current	FG/RD			20	mA
T_A	Operating ambient temperature		–40		125	°C
T_J	Operating junction temperature		–40		150	°C

5.4 Thermal Information

THERMAL METRIC[1]		MC121 SOT-23-FL (DYM) 6 PINS	MC121 X2SON (DEZ) 6 PINS	UNIT
$R_{\theta JA}$	Junction-to-ambient thermal resistance	156.1	74.3	°C/W
$R_{\theta JC(top)}$	Junction-to-case (top) thermal resistance	63.1	39.6	°C/W
$R_{\theta JB}$	Junction-to-board thermal resistance	25.6	45.3	°C/W
Ψ_{JT}	Junction-to-top characterization parameter	10.1	0.4	°C/W

Copyright © 2026 Texas Instruments Incorporated

THERMAL METRIC[1]		MC121 SOT-23-FL (DYM) 6 PINS	MC121 X2SON (DEZ) 6 PINS	UNIT
Ψ_{JB}	Junction-to-board characterization parameter	25.5	45.3	°C/W
$R_{\theta JC(bot)}$	Junction-to-case (bottom) thermal resistance	N/A	16.3	°C/W

(1) For more information about traditional and new thermal metrics, see the Semiconductor and IC Package Thermal Metrics application report.

5.5 Electrical Characteristics

MC121: 3.2V ≤ V_{VM} ≤ 35V, –40°C ≤ T_J ≤ 150°C (unless otherwise noted)
Typical values are at T_J = 25°C and V_{VM} = 12V.

PARAMETER		TEST CONDITIONS	MIN	TYP	MAX	UNIT
POWER SUPPLIES (VM)						
I_{VMQ}	VM sleep mode current	$V_{PWM/DC}$ = 0V, SLEEP_EN = 0x1		0.08	0.14	mA
I_{VM}	VM active mode current	$V_{PWM/DC}$ = 3V (PWMDC_MODE = 0x1) or floating (PWM_DC = 0x0), no load across OUTx		3.9	5	mA
t_{WAKE}	Turn-on time from standby/sleep mode	Time taken from PWM input duty = 0% to 100% to OUTx switching, (PWMDC_MODE = 0x0, PWM_IN_RANGE = 0x0)			16	ms
		Time taken from PWM input duty = 0% to 100% to OUTx switching, (PWMDC_MODE = 0x0, PWM_IN_RANGE = 0x1)			64	ms
	Turn-on time from standby/sleep mode	Time taken from DC input = 0V to 3V to OUTx switching, (PWMDC_MODE = 0x1)			1	ms
t_{STOP_DET}	Time taken to detect DIN = 0%	Time take from PWM input duty = 100% to 0% to initiate motor stop as per RAMP_ON_STOP_DIS, (PWMDC_MODE = 0x0, PWM_IN_RANGE = 0x0)			16	ms
		Time take from PWM input duty = 100% to 0% to initiate motor stop as per RAMP_ON_STOP_DIS, (PWMDC_MODE = 0x0, PWM_IN_RANGE = 0x1)			64	ms
	Time taken to detect DIN = 0%	Time take from DC input = 3V to 0V to initiate motor stop as per RAMP_ON_STOP_DIS, (PWMDC_MODE =0x1)			1.5	ms
PWM/DC (SCL) and FG/RD (SDA)						
V_{IL}	Input logic low voltage	PWM/DC pin in PWM input mode (PWMDC_MODE =0x0) during active or standby state or SCL mode, FG/RD pin in SDA mode			0.8	V
V_{IH}	Input logic high voltage		2			V
V_{HYS}	Input hysteresis		0.15	0.2	0.28	V
V_{SLEEP_DC}	Voltage threshold on PWM/DC pin for sleep entry in DC input mode	Voltage applied on PWM/DC pin, SLEEP_EN = 0x1, PWMDC_MODE = 0x1	0.04		0.12	V

MC121: 3.2V ≤ V_{VM} ≤ 35V, –40°C ≤ T_J ≤ 150°C (unless otherwise noted)
Typical values are at T_J = 25°C and V_{VM} = 12V.

PARAMETER		TEST CONDITIONS	MIN	TYP	MAX	UNIT
I_{IL} (PWM/DC)	Input logic low current	V_I = 0V, SLEEP_EN = 0x0, PWM/DC pin in PWM input mode (PWMDC_MODE = 0x0) or SCL mode	215	245	270	µA
		V_I = 0V, SLEEP_EN = 0x0, PWM/DC pin in DC input mode (PWMDC_MODE = 0x1)			1	µA
		V_I = 0V, SLEEP_EN = 0x1, PWM/DC pin in PWM input mode (PWMDC_MODE = 0x0) or DC input mode (PWMDC_MODE = 0x1) or SCL mode	20	50	70	µA
I_{IH} (PWM/DC)	Input logic high current	V_I = 3.3V, PWM/DC pin in PWM input mode (PWMDC_MODE = 0x0) or DC input mode (PWMDC_MODE = 0x1) or SCL mode	-1		1	µA
		V_I = $V_{VM,}$ PWM/DC pin in PWM input mode (PWMDC_MODE = 0x0) or DC input mode (PWMDC_MODE = 0x1) or SCL mode	-1		1	µA
V_{PU} (PWM/DC)	Internal pull-up voltage	PWM input mode (PWMDC_MODE = 0x0), V_{VM} ≥ 3.6V	2.7	2.9	3.2	V
		PWM input mode (PWMDC_MODE = 0x0), V_{VM} < 3.6V	2.55		V_{VM}	V
f_{PWM_IN}	Input PWM frequency range for duty/ speed reference	PWM input (PWMDC_MODE = 0x0), PWM_IN_RANGE = 0x0	0.08		90	kHz
		PWM input (PWMDC_MODE = 0x0), PWM_IN_RANGE = 0x1	0.02		22	kHz
V_{PWM_ACC}	Duty/speed reference accuracy from PWM input	20Hz ≤ f_{PWM_IN} ≤ 45kHz		0.4		%
		45kHz < f_{PWM_IN} ≤ 90kHz		0.8		%
V_{DC}	DC input range for duty/speed reference	DC input (PWMDC_MODE = 0x1), 3.2V ≤ V_{VM} < 4.5V	0		V_{VM} - 1.4	V
		DC input (PWMDC_MODE = 0x1), 4.5V ≤ V_{VM} ≤ 35V	0		3.2	V
$V_{DC_0\%}$	DC input threshold for 0% duty/speed reference (DIN = 0%)	DC input (PWMDC_MODE = 0x1)	0.04		0.12	V
$V_{DC_100\%}$	DC input threshold for 100% duty/speed reference (DIN = 100%)	DC input (PWMDC_MODE = 0x1), 3.2V ≤ V_{VM} < 4.5V	V_{VM} - 1.4		3.2	V
		DC input (PWMDC_MODE = 0x1), 4.5V ≤ V_{VM} ≤ 35V	2.8	3	3.2	V
V_{DC_ACC}	Duty/speed reference accuracy from DC input	DC input (PWMDC_MODE = 0x1), 4.5V ≤ V_{VM} ≤ 35V			3	%
V_{OL} (FG/RD)	Output logic low voltage	I_{OD} = 20mA			0.4	V
I_{OZ} (FG/RD)	Output logic high current	V_{OD} = 3.3V	-1		1	µA
I_{OZ} (FG/RD)	Output logic high current	V_{OD} = V_{VM}	-1		1	µA
DRIVER OUTPUTS (OUTx)						
$R_{DS(on)}$ (H+L)	High-side+Low-side MOSFET on resistance	V_{VM} = 3.2V, I_O = 500mA, T_A = 25°C		0.9	1.02	Ω
$R_{DS(on)}$ (H+L)	High-side+Low-side MOSFET on resistance	V_{VM} = 12V, I_O = 500mA, T_A = 25°C		0.85	0.95	Ω
$R_{DS(on)}$ (H+L)	High-side+Low-side MOSFET on resistance	V_{VM} = 12V, I_O = 500mA, T_A = 150°C		1.3	1.5	Ω
f_{PWM_OUT}	PWM output frequency	PWM_OUT_FREQ = 0x0, DITHER_EN = 0x0	23.5	25	26.25	kHz

Copyright © 2026 Texas Instruments Incorporated

MC121: 3.2V ≤ V_{VM} ≤ 35V, –40°C ≤ T_J ≤ 150°C (unless otherwise noted)
Typical values are at T_J = 25°C and V_{VM} = 12V.

PARAMETER		TEST CONDITIONS	MIN	TYP	MAX	UNIT
f_{PWM_OUT}	PWM output frequency	PWM_OUT_FREQ = 0x1, DITHER_EN = 0x0	45	50	55	kHz
DIGITAL-LATCH HALL EFFECT SENSOR						
B_{OP}	Operate point		0.4	0.8	1.6	mT
B_{RP}	Release point		-1.6	-0.7	-0.4	mT
B_{HYS}	Hysteresis; $B_{HYS} = (B_{OP} – B_{RP})$		1.0	1.6	3.2	mT
B_{OF}	Magnetic offset; $B_{OF} = (B_{OP} + B_{RP}) / 2$		-1	0	1	mT
OSCILLATOR						
f_{osc}	Internal oscillator frequency	V_{VM} = 12V, T_J = 25ºC	24.625	25	25.375	MHz
f_{osc}	Internal oscillator frequency		24.19	25	25.75	MHz
DUTY CURVE						
D_{OUT_RES}	Output duty cycle resolution per LSB	Measured at 50% voltage level, 0.4% ≤ DOUT ≤ 99.6%		0.4		%
D_{HYS}	Speed curve hysteresis for rising D_{IN}	DIN_HYS = 0x0. Sweep DIN from 0% to DIN0+DIN_HYS. Output DOUT changes from DOUT0 to target duty cycle.		0		%
		DIN_HYS = 0x1. Sweep DIN from 0% to DIN0+DIN_HYS. Output DOUT changes from DOUT0 to target duty cycle.		1.2		%
		DIN_HYS = 0x2. Sweep DIN from 0% to DIN0+DIN_HYS. Output DOUT changes from DOUT0 to target duty cycle.		2.4		%
		DIN_HYS = 0x3. Sweep DIN from 0% to DIN0+DIN_HYS. Output DOUT changes from DOUT0 to target duty cycle.		4.8		%
$SPEED_{ERR}$	Closed loop speed accuracy	T_J = 25ºC, SPEED_LOOP_EN = 0x1, 12.5% x MAX_SPEED ≤ SPEED_REF ≤ MAX_SPEED	-1		2	%
		SPEED_LOOP_EN = 0x1, 12.5% x MAX_SPEED ≤ SPEED_REF ≤ MAX_SPEED	-3.5		3.5	%
COMMUTATION						
$\theta_{HALL_OS_ANGLE}$	Minimum Hall offset angle	HALL_OS_ANGLE = 0x00		0		deg
	Maximum Hall offset angle	HALL_OS_ANGLE = 0x1F		43.8		deg
$\theta_{HALL_OS_ANGLE_LSB}$	Hall offset angle resolution per LSB	HALL_OS_ANGLE LSB		1.4		deg
t_{HALL_OS}	Minimum Hall offset signal lead/lag time	HALL_OS_TIME = 0x00		0		µs
	Maximum Hall offset signal lead/lag time	HALL_OS_TIME = 0xFF		2.6		ms
$t_{HALL_OS_LSB}$	Hall offset signal lead/lag time resolution per LSB	HALL_OS_TIME LSB		10.24		µs
t_{DEMAG}	Minimum time for demagnetization period	DEMAG_TIME = 0x00		0		µs
	Maximum time for demagnetization period	DEMAG_TIME = 0x7F		5.2		ms
t_{DEMAG_LSB}	DEMAG_TIME time resolution per LSB	DEMAG_TIME LSB		40.96		µs
θ_{SRISE}	Minimum angle for soft rise	SRISE = 0x00		2.8		deg
	Maximum angle for soft rise	SRISE = 0x10		90		deg
θ_{SRISE_LSB}	SRISE angle resolution per LSB	SRISE LSB		2.8		deg
θ_{SFALL}	Minimum angle for soft fall	SFALL = 0x00		2.8		deg
	Maximum angle for soft fall	SFALL = 0x1F		90		deg

Copyright © 2026 Texas Instruments Incorporated

MC121: 3.2V ≤ V_{VM} ≤ 35V, –40°C ≤ T_J ≤ 150°C (unless otherwise noted)
Typical values are at T_J = 25°C and V_{VM} = 12V.

PARAMETER		TEST CONDITIONS	MIN	TYP	MAX	UNIT
θ_{SFALL_LSB}	SFALL angle resolution per LSB	SRISE LSB		2.8		deg
PRESTART AND PWM RAMP/SOFT START						
PWM_RAMP_RATE	Output duty cycle ramp rate for soft start and speed changes	PWM_RAMP_SEL = 0x0 (10.7s for 0 to 100%)		9.35		%/s
		PWM_RAMP_SEL = 0x1 (5.35s for 0 to 100%)		18.7		%/s
		PWM_RAMP_SEL = 0x2 (2.67s for 0 to 100%)		37.4		%/s
		PWM_RAMP_SEL = 0x3 (1.34s for 0 to 100%)		74.8		%/s
PROTECTION CIRCUITS						
V_{CLAMP}	VM clamping voltage	I_{clamp} = 20mA	37		43	V
V_{POR}	VM power on reset threshold to power-up the device	Supply rising	2.3	2.55	2.7	V
V_{POR_HYS}	VM power on reset threshold hysteresis	Rising to falling threshold	0.04	0.09	0.13	V
V_{UVLO}	Supply undervoltage lockout threshold to start/stop driving the motor	Supply rising (UVLO_SEL = 0x0)	2.85	3	3.15	V
		Supply falling (UVLO_SEL = 0x0)	2.55	2.7	2.85	V
V_{UVLO_HYS}	Supply UVLO hysteresis	Rising to falling threshold (UVLO_SEL = 0x0)		0.33		V
V_{UVLO}	Supply undervoltage lockout threshold to start/stop driving the motor	Supply rising (UVLO_SEL = 0x1)	3.97	4.2	4.5	V
		Supply falling (UVLO_SEL = 0x1)	2.55	2.7	2.85	V
V_{UVLO_HYS}	Supply UVLO hysteresis	Rising to falling threshold (UVLO_SEL = 0x1)		1.5		V
V_{UVLO}	Supply undervoltage lockout threshold to start/stop driving the motor	Supply rising (UVLO_SEL = 0x2)	5.42	5.7	6	V
		Supply falling (UVLO_SEL = 0x2)	2.55	2.7	2.85	V
V_{UVLO_HYS}	Supply UVLO hysteresis	Rising to falling threshold (UVLO_SEL = 0x2)		3		V
V_{UVLO}	Supply undervoltage lockout threshold to start/stop driving the motor	Supply rising (UVLO_SEL = 0x3)	7.2	7.6	8	V
		Supply falling (UVLO_SEL = 0x3)	2.55	2.7	2.85	V
V_{UVLO_HYS}	Supply UVLO hysteresis	Rising to falling threshold (UVLO_SEL = 0x3)		4.9		V
V_{OVP}	Supply overvoltage protection threshold (OVP)	Supply rising (OVP_SEL = 0x0)	32.7	34.5	36.3	V
V_{OVP}	Supply overvoltage protection threshold (OVP)	Supply falling (OVP_SEL = 0x0)	31.4	33.2	34.9	V
V_{OVP}	Supply overvoltage protection threshold (OVP)	Supply rising (OVP_SEL = 0x1)	21.5	22.6	23.9	V
V_{OVP}	Supply overvoltage protection threshold (OVP)	Supply falling (OVP_SEL = 0x1)	20.1	21.2	22.3	V
V_{OVP}	Supply overvoltage protection threshold (OVP)	Supply rising (OVP_SEL = 0x2)	17.5	18.1	19.3	V
V_{OVP}	Supply overvoltage protection threshold (OVP)	Supply falling (OVP_SEL = 0x2)	15.9	16.9	17.9	V
V_{OVP_HYS}	Supply overvoltage hysteresis			1.5		V
t_{OVP_DEG}	Supply overvoltage deglitch time		70	80	90	µs
t_{OVP_BLANK}	Supply overvoltage blanking time	OVP_BLANK_EN = 0x0, OVP_BLANK_SEL = 0x1		1		ms
		OVP_BLANK_EN = 0x0, OVP_BLANK_SEL = 0x0		4		ms

Copyright © 2026 Texas Instruments Incorporated

MC121: 3.2V ≤ V_{VM} ≤ 35V, –40°C ≤ T_J ≤ 150°C (unless otherwise noted)
Typical values are at T_J = 25°C and V_{VM} = 12V.

PARAMETER		TEST CONDITIONS	MIN	TYP	MAX	UNIT
I_{LIMIT}	Current limit threshold	ILIMIT_SEL = 0x0	0.29	0.32	0.37	A
		ILIMIT_SEL = 0x1	0.38	0.43	0.49	A
		ILIMIT_SEL = 0x2	0.48	0.53	0.61	A
		ILIMIT_SEL = 0x3	0.58	0.63	0.73	A
		ILIMIT_SEL = 0x4	0.67	0.73	0.85	A
		ILIMIT_SEL = 0x5	0.76	0.83	0.97	A
		ILIMIT_SEL = 0x6	0.85	0.94	1.09	A
		ILIMIT_SEL = 0x7	0.93	1.02	1.21	A
		ILIMIT_SEL = 0x8	1.02	1.12	1.33	A
		ILIMIT_SEL = 0x9	1.1	1.21	1.44	A
t_{ILIMIT_DEG}	Current limit deglitch time	ILIM_DEGLITCH_SEL = 0x0		0.6		µs
	Current limit deglitch time	ILIM_DEGLITCH_SEL = 0x1		1.1		µs
I_{OCP}	Overcurrent protection trip point (HS_FET)		1.3 * I_{LIMIT}	1.7 * I_{LIMIT}	2.2 * I_{LIMIT}	A
I_{OCP}	Overcurrent protection trip point (LS_FET)		1.45 * I_{LIMIT}	1.7 * I_{LIMIT}	1.85 * I_{LIMIT}	A
t_{OCP_DEG}	Overcurrent protection deglitch time			0.6		µs
t_{LRD_START}	Locked rotor detection time at start-up	LRD_TIME_STARTUP = 0x0	0.31	0.32	0.34	s
		LRD_TIME_STARTUP = 0x1	0.42	0.44	0.46	s
		LRD_TIME_STARTUP = 0x2	0.5	0.52	0.55	s
		LRD_TIME_STARTUP = 0x3	1	1.05	1.1	s
N_{RETRY}	Long retry time multiplier for locked rotor and overcurrent. Long retry time = N_{RETRY} x t_{LRD_START}	LRD_LONG_RETRY_SEL = 0x0		2		
		LRD_LONG_RETRY_SEL = 0x1		4		
		LRD_LONG_RETRY_SEL = 0x2		8		
		LRD_LONG_RETRY_SEL = 0x3		10		
		LRD_LONG_RETRY_SEL = 0x4		12		
		LRD_LONG_RETRY_SEL = 0x5		16		
		LRD_LONG_RETRY_SEL = 0x6		24		
		LRD_LONG_RETRY_SEL = 0x7		28		
t_{LRD_RUN}	Locked rotor detection time after start-up	Locked rotor during motor run	0.29	0.32	0.35	s
T_{TSD}	Thermal shutdown temperature		155	170	185	°C
T_{HYS}	Thermal shutdown hysteresis			24		°C

5.6 I2C Timing Requirements

		MIN	NOM	MAX	UNIT
STANDARD MODE					
f_{SCL}	SCL Clock frequency	0		100	kHz
$t_{HD,STA}$	Hold time (repeated) START condition. After this period, the first clock pulse is generated	4			µs
t_{LOW}	LOW period of the SCL clock	4.7			µs
t_{HIGH}	HIGH period of the SCL clock	4			µs
$t_{SU,STA}$	Setup time for a repeated START condition	4.7			µs
$t_{HD,DAT}$	Data hold time: For I2C bus devices	0.01		3.45	µs
$t_{SU,DAT}$	Data set-up time	250			ns
t_R	SDA and SCL rise time			1000	ns

Copyright © 2026 Texas Instruments Incorporated

		MIN	NOM	MAX	UNIT
t_F	SDA and SCL fall time			300	ns
$t_{SU,STO}$	Set-up time for STOP condition	4			µs
t_{BUF}	Bus free time between a STOP and START condition	4.7			µs
FAST MODE					
f_{SCL}	SCL Clock frequency	0		400	kHz
$t_{HD,STA}$	Hold time (repeated) START condition. After this period, the first clock pulse is generated	0.6			µs
t_{LOW}	LOW period of the SCL clock	1.3			µs
t_{HIGH}	HIGH period of the SCL clock	0.6			µs
$t_{SU,STA}$	Setup time for a repeated START condition	0.6			µs
$t_{HD,DAT}$	Data hold time: For I2C bus devices	0.01		0.9	µs
$t_{SU,DAT}$	Data set-up time	50			ns
t_R	SDA and SCL rise time			300	ns
t_F	SDA and SCL fall time			300	ns
$t_{SU,STO}$	Set-up time for STOP condition	0.6			µs
t_{BUF}	Bus free time between a STOP and START condition	1.3			µs
t_{SP}	Pulse width of spikes to be suppressed by input noise filter		50		ns

5.7 Timing Diagrams

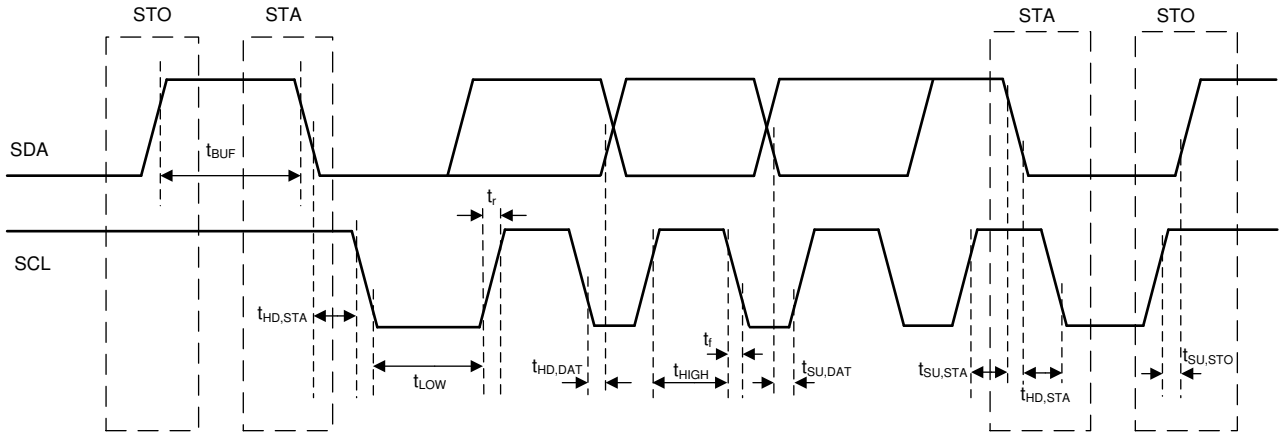

Figure 5-1. I²C Timing Diagram

Copyright © 2026 Texas Instruments Incorporated

6 Detailed Description

6.1 Overview

The MC121 is a 40V, 850mΩ rated, 1.21A peak, single phase BLDC motor driver with integrated N-channel full-bridge FETs, charge pump, Hall sensor, commutation control logic, and protection circuitry. The Hall sensor provides rotor position information to the commutation logic to maintain continuous rotor motion. The commutation logic can be programmed for square and soft PWM waveforms to reduce acoustic noise or maximize speed/efficiency.

6.2 Functional Block Diagram

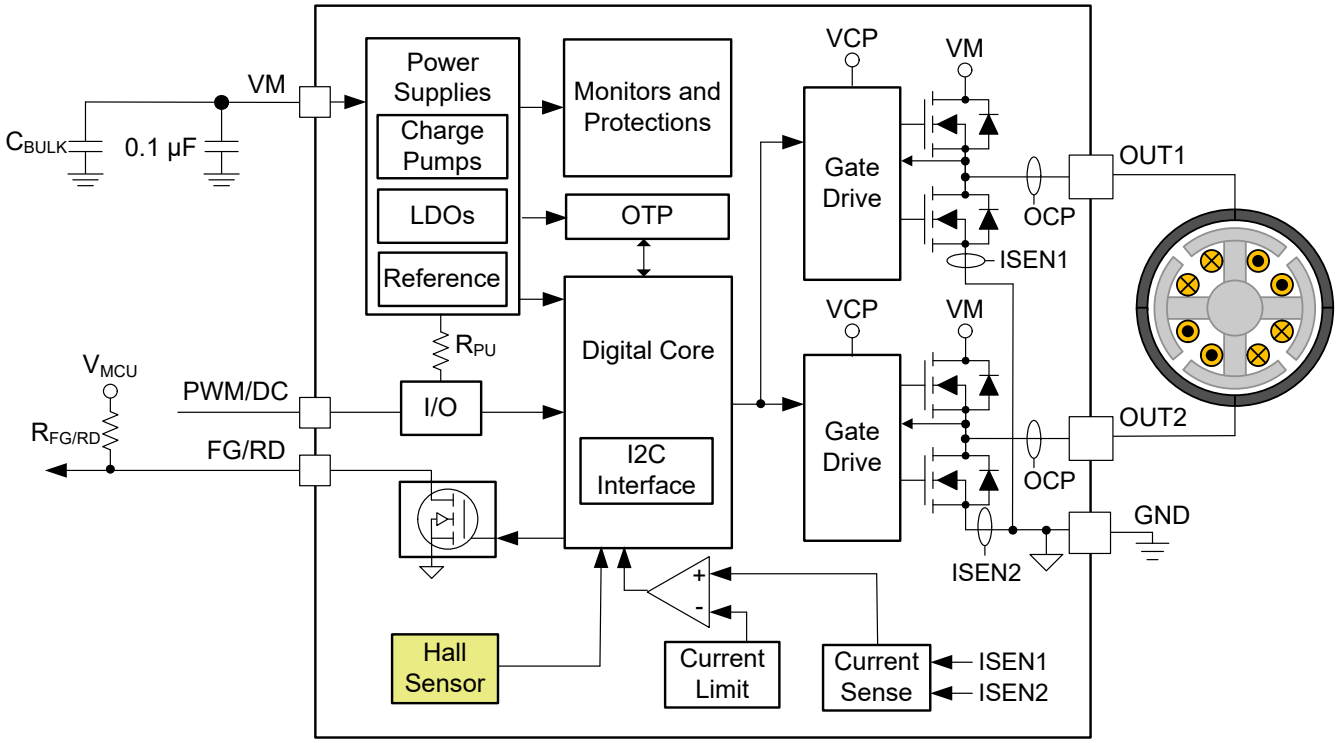

Figure 6-1. MC121 Functional Block Diagram

6.3 Feature Description

6.3.1 Motor Control

MC121 accepts a pulse-width modulated (PWM) or a DC (analog) input on the PWM/DC pin to control the motor speed. The MC121 provides a configurable duty curve to map the input duty (DIN in Figure 6-2) to a user configured target output duty cycle (DOUT_TARGET in Figure 6-2). The MC121 also provides a user configurable duty ramp to smoothly increase/decrease the output duty cycle (DOUT in Figure 6-2) to reach DOUT_TARGET.

The MC121 supports both open-loop (duty cycle) and closed-loop (speed) control. In open-loop (duty cycle) control, the applied duty cycle is directly set by DOUT while in closed-loop (speed) control, the applied duty cycle is set by the speed loop.

An integrated digital-latch Hall sensor provides rotor position and timing information to the commutation algorithm. The MC121 supports square and soft output PWM waveshaping schemes to optimize between efficiency, motor speed, and acoustic noise.

The MC121 provides hybrid, synchronous, and asynchronous output PWM modulation modes on the H-bridge. Configurable hall lead/lag angle and time adjustment is available to improve the efficiency across both lower and

higher speeds. In addition, MC121 provides a configurable demagnetization (auto or manual) feature to reduce the motor winding current to zero before a commutation to minimize the DC bus (VM) voltage spike, acoustic noise, and improve efficiency.

The MC121 provides configurable silence angle feature to apply 0% duty at the start of commutation for reducing the peak current. The silence angle can be configured by SILENCE_ANGLE bits.

Figure 6-2 shows the motor control block diagram of MC121.

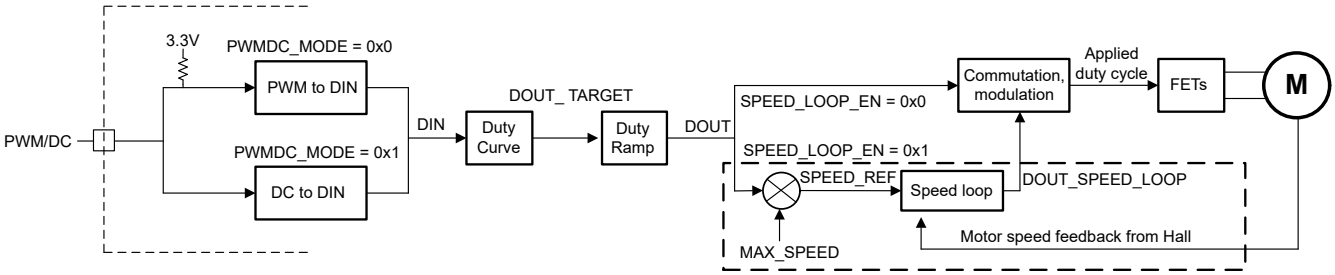

Figure 6-2. MC121 Motor Control Block Diagram

6.3.1.1 Duty Input

MC121 receives the duty input (DIN) from the PWM/DC pin. The PWM/DC input can either be a PWM or DC (analog) signal and is selected by PWMDC_MODE bit. The input PWM frequency can range between 20Hz and 90kHz (input PWM frequency range configured by PWM_IN_RANGE bit), while the DC input can range between (0-3)V.

When in PWM input mode, the PWM/DC pin integrates a pull-up feature to set the duty input (DIN) to 100% when the pin is left floating/unconnected for applications that need only ON/OFF control. In DC input mode, the PWM/DC pin must be forced to the desired value using an external circuit.

Note

When PWRUP_PWMDC_MASK is set to 0x1, MC121 waits for 1s after power-up before reacting to input from PWM/DC pin. There is no wait time on power-up when PWRUP_PWMDC_MASK is set to 0x0.

6.3.1.2 Duty Curve

MC121 supports configurable duty curve as shown in Figure 6-3. This allows user to set the target output duty cycle (DOUT_TARGET) as a function of input duty (DIN) depending on the specific use-case enabling a single platform BLDC driver designs for different end applications.

Copyright © 2026 Texas Instruments Incorporated

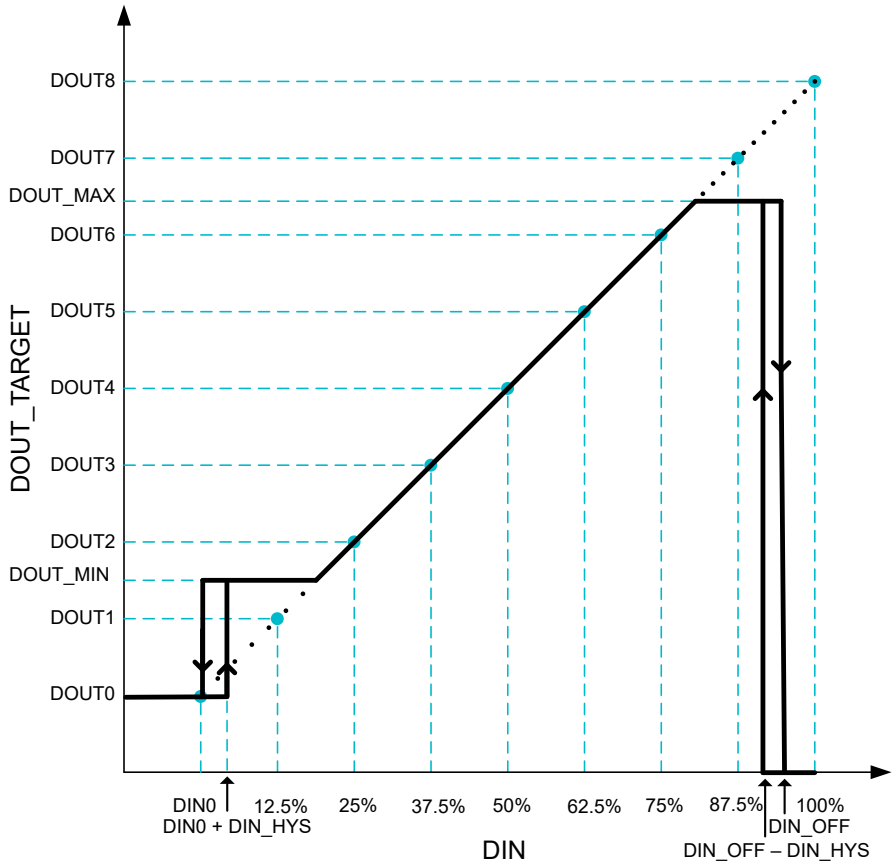

Figure 6-3. Duty Curve

The configurable points on the duty curve are as follows,

- **DIN0, DOUT0**: DIN0 can be used to set the minimum input (starting) duty cycle to start driving the motor when STBY_EN = 0x1. The motor is not driven till DIN ≥ (DIN0 + DIN_HYS). DIN_HYS sets the hysteresis around DIN0 to start/stop driving the motor. MC121 also provides the option of driving the motor even when DIN < DIN0 by setting STBY_EN to 0x0 and DOUT0 to a non-zero value. The device state when DIN = 0% is set by SLEEP_EN and STBY_EN bits as listed in Table 6-5.
- **DIN_OFF**: DIN_OFF sets the maximum input duty cycle (DIN) above which target output duty cycle (DOUT_TARGET) is set to zero to stop driving the motor. DOUT_TARGET is set to 0% when DIN ≥ DIN_OFF. The motor driving resumes when DIN < (DIN_OFF - DIN_HYS).
- **DOUT_MIN**: DOUT_MIN sets the minimum target output duty cycle (DOUT_TARGET) when DIN0 < DIN < DINOFF.
- **DOUT_MAX**: DOUT_MAX sets the maximum target output duty cycle (DOUT_TARGET) when DIN < DINOFF. In closed loop (speed control) operation, the maximum target output duty cycle is set by the speed loop.
- **DOUTx**: DOUTx sets the target output duty (DOUT_TARGET) at fixed intervals of input duty (DIN). DOUT1 sets the target output duty at DIN = 12.5%, DOUT2 sets the target output duty at DIN = 25% and so forth such that DOUT8 sets the target output duty at DIN = 100% . DOUTx can be used to configure a positive slope duty curve as shown in Figure 6-3 or to configure a negative slope as shown in Figure 6-4. DOUTx can also be used to configure mixed slope (positive, negative, and zero) as shown in Figure 6-5.

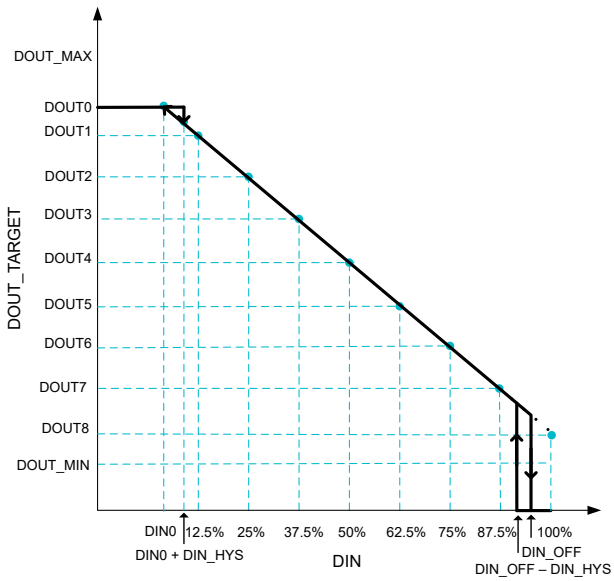

Figure 6-4. Duty Curve - Negative Slope

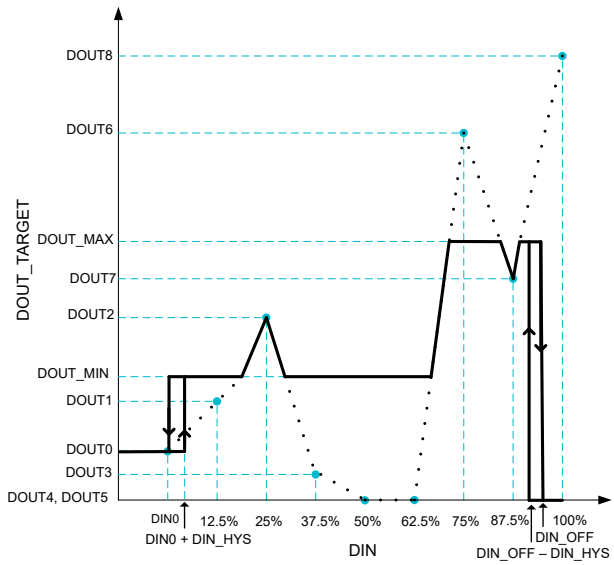

Figure 6-5. Duty Curve - Mixed Slope

When using analog speed input mode (PWMDC_MODE = 0x1), the PWM/DC pin accepts an analog voltage between 0V and 3V to control the output duty cycle (open loop) or speed (closed-loop). In DC input mode, the PWM/DC pin voltage maps linearly from 0V-3V to 0%-100% (DIN).

6.3.1.3 Motor Start, Speed Change, and Stop

Motor Start

The MC121 features a user configured ramp to reach the target output duty cycle (DOUT_TARGET in Figure 6-2) during motor start-up as shown in Figure 6-6. The two stage ramp (pre-start followed by soft start) enables a reliable start-up and reduces motor noise.

The MC121 enters the pre-start phase when the device exits standby mode, sleep mode, or fault mode. When PRESTART_RAMP_EN is set to 0x1, the output duty cycle (DOUT in Figure 6-2) increases linearly from starting duty cycle (DOUT_START x DOUT_MAX when speed loop is disabled and DOUT_START when speed loop is enabled) at the rate set by PWM_RAMP_SEL. When PRESTART_RAMP_EN is set to 0x0, then DOUT is updated directly by the DOUT_TARGET. The pre-start phase continues till 16 to 32 hall edges are observed.

After pre-start phase when PWM_RAMP_EN is set to 0x1, the output duty cycle (DOUT) increases linearly to ramp up DOUT to DOUT_TARGET at the rate set by the PWM_RAMP_SEL. If DOUT has already reached DOUT_TARGET by the end of pre-start phase, the device enters steady state directly. The soft start phase ends when DOUT reaches output duty or speed target. When PWM_RAMP_EN is set to 0x0, then DOUT is updated directly by the DOUT_TARGET after pre-start phase.

During the pre-start phase, the MC121 always uses square commutation to drive the motor. The MC121 do not apply hall offset (angle and time offset) during the pre-start phase. A demagnetization time (set by DEMAG_TIME configuration) is applied during the pre-start phase to minimize the DC bus voltage spikes at startup. In the soft-start phase, both hall offset and demagnetization time (set by AUTO_DEMAG_EN configuration) are applied and MC121 uses the commutation scheme set by the COMMUTATION_MODE.

If the MC121 does not detect a Hall signal transition within the locked rotor detection time t_{LRD}, the device enters the locked rotor protection fault state. During start-up sequence, locked rotor detection time (t_{LRD_START}) is user configured by LRD_TIME_STARTUP. During motor run, locked rotor detection time (t_{LRD_RUN}) is fixed at 320ms. Hall offset (angle and time) is disabled during the pre-start phase.

Copyright © 2026 Texas Instruments Incorporated

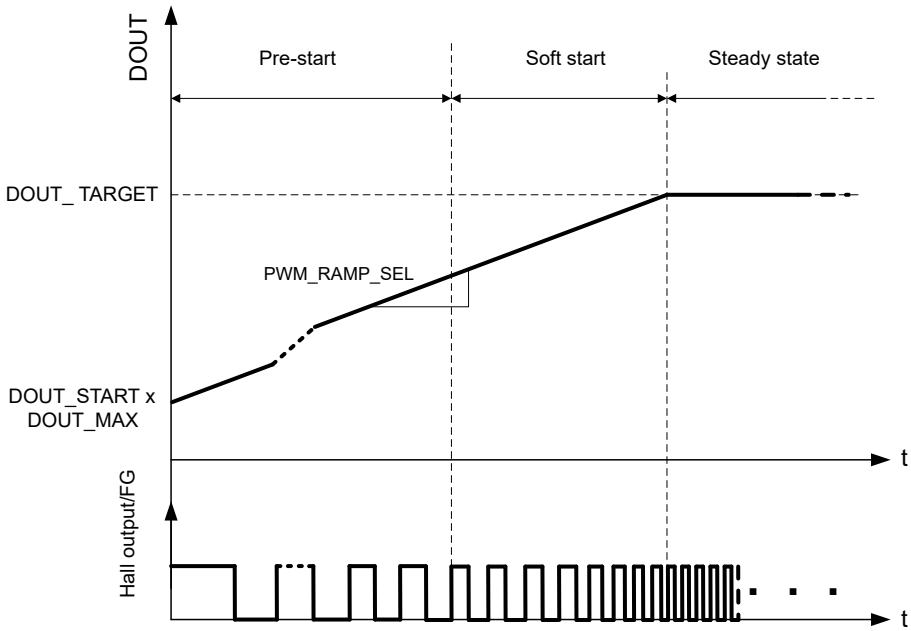

Figure 6-6. Output duty cycle during motor start

Speed Change

During motor operation, when DIN changes, the MC121 ramps the output duty cycle (DOUT in Figure 6-2) from previous target duty cycle (DOUT_TARGET_PREV) to the new target duty cycle (DOUT_TARGET) using user configured ramp rate. During acceleration (DOUT_TARGET > DOUT_TARGET_PREV), the ramp rate is set by PWM_RAMP_SEL and during deceleration (DOUT_TARGET < DOUT_TARGET_PREV), the ramp rate is either PWM_RAMP_SEL (when PWM_DECEL_SEL = 0x0) or 0.5x PWM_RAMP_SEL (when PWM_DECEL_SEL = 0x1). PWM_DECEL_SEL = 0x1 provides a slower ramp during deceleration to avoid DC bus spikes due to regenerative energy push-back from motor. Figure 6-7 shows examples of DOUT increasing and decreasing according to PWM_RAMP_SEL.

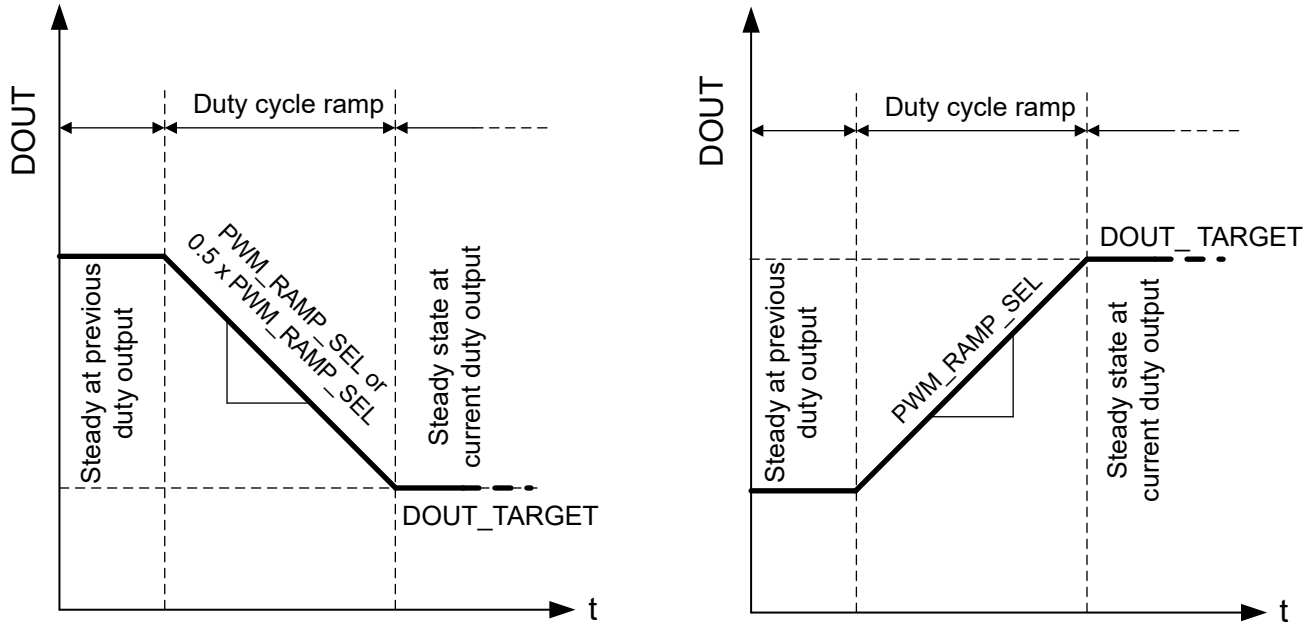

Figure 6-7. Duty Cycle Ramp

Motor Stop

When a motor stop (DOUT_TARGET = 0%) is received, MC121 stops the motor based on RAMP_ON_STOP_DIS setting. When RAMP_ON_STOP_DIS is set to 0x1, all FETs are placed in Hi-Z on detecting motor stop (within t_{STOP_DET}). When RAMP_ON_STOP_DIS is set to 0x0, the device ramps down DOUT (at the rate set by PWM_DECEL_SEL) to zero followed by Hi-Z of all FETs. Once the FETs are in Hi-Z, depending on the STBY_EN and SLEEP_EN configuration, MC121 continues in active, standby, or enters low-power sleep state. The motor stop sequence when DOUT_TARGET is set to 0% is shown in Figure 6-8.

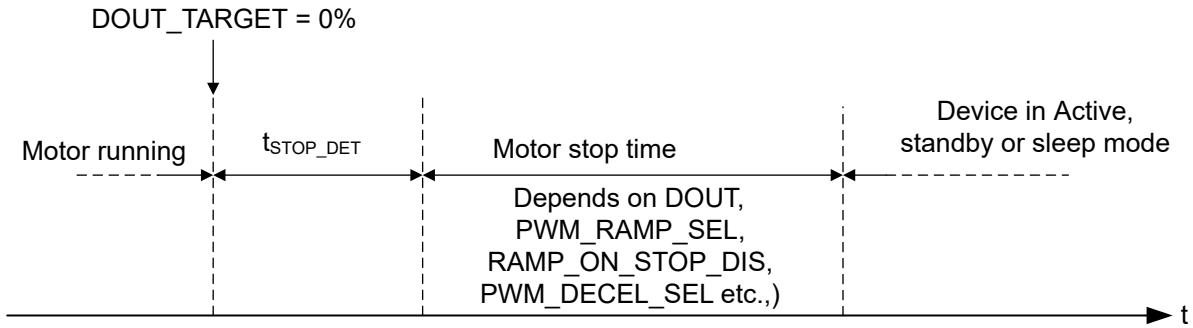

Figure 6-8. Motor stop Sequence when DOUT_TARGET = 0%

Note

Setting the PWM_RAMP_EN bit to 0x0 disables the duty cycle ramp. Disabling the duty cycle ramp results in a step change in the DOUT (when DIN changes), that can result in high motor phase currents or DC bus voltage spikes. TI recommends setting PWM_RAMP_EN to 0x1 to avoid any current or voltage spikes.

6.3.1.4 Open-Loop (Duty Cycle) Control

In open-loop control mode (SPEED_LOOP_EN set to 0x0), the internal input duty signal (DIN), duty curve, and duty ramp output (DOUT) determine the peak output duty cycle of the commutation waveform (motor phase voltage applied across OUTx pins). The block diagram for the open loop mode of operation of the MC121 is shown in Figure 6-9. The applied duty cycle over an electrical half cycle to the H-bridge FETs depends on the commutation mode (COMMUTATION_MODE) and modulation mode (PWM_MODE) configurations.

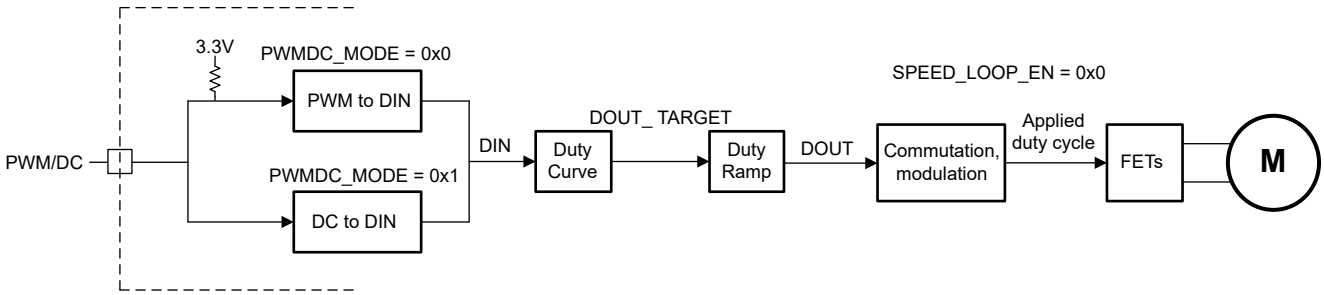

Figure 6-9. Open (Duty) Loop Control

6.3.1.5 Closed-Loop (Speed) Control

The MC121 has a closed loop (speed) control mode which can be used to maintain constant speed under varying operating conditions (VM, load) as shown in Figure 6-10. Speed loop is enabled by setting SPEED_LOOP_EN to 0x1 and the speed reference/target (SPEED_REF) is set by (DOUT x MAX_SPEED). The motor speed feedback from integrated Hall sensor is compared with the SPEED_REF and the error is fed into a PI loop. The PI loop Kp and Ki coefficients are configured through KP_RATIO and KI_RATIO. The output of speed loop (DOUT_SPEED_LOOP) sets the peak applied duty cycle. When output of the speed loop (DOUT_SPEED_LOOP) saturates, the integrator is disabled to prevent integral wind-up.

Copyright © 2026 Texas Instruments Incorporated

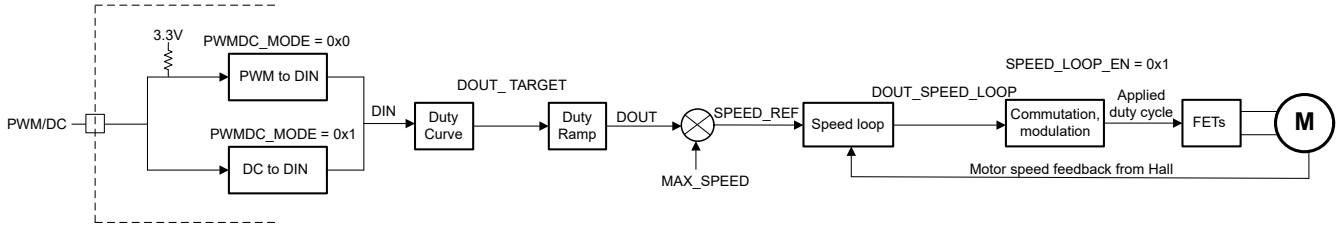

Figure 6-10. Closed (Speed) Loop Control

6.3.1.6 Commutation

In motors, commutation is the process of orienting stator and rotor magnetic fields to maintain continuous rotor motion. The rotor of a single phase BLDC motor contains a permanent magnet with alternating poles. The stator has one phase winding which attracts and repels the rotor magnet poles when energized. A Hall sensor integrated in the MC121 determines which direction to drive the current through the stator winding to commutate the motor. Figure 6-11 shows an example of single-phase motor commutation using the MC121. For proper motor commutation, the MC121 must be placed between two of the stator poles with the Hall element directly beneath the rotor magnet.

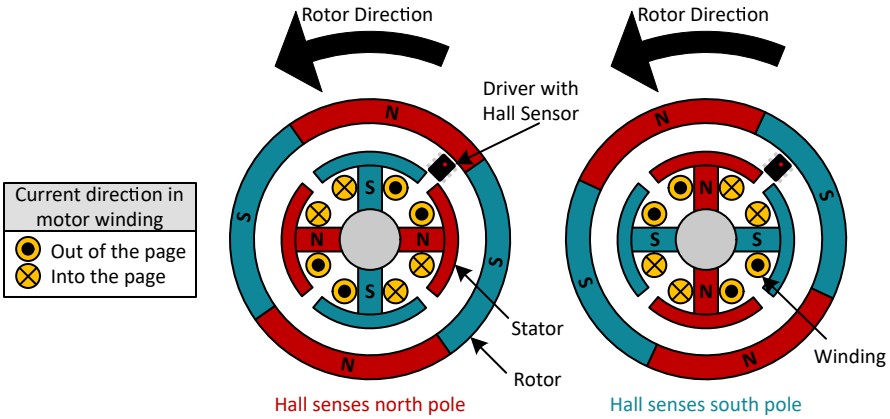

Figure 6-11. Example of Single Phase Motor Commutation

The MC121 driver integrates the following functions for commutation of a single-phase BLDC motor.

- Digital-latch Hall sensor for rotor position sensing
- Hall sensor offset angle setting for lead or lag angle adjustment using the HALL_OS_ANGLE and HALL_ANGLE_MODE bits
- Hall sensor delay setting for lead or lag time adjustment using the HALL_OS_TIME and HALL_TIME_MODE bits
- Hall latch sensor output inversion with the HALL_INVERT bit to change motor rotation direction or accommodate various Hall sensor orientation
- Square and soft PWM duty cycle waveshaping selected by COMMUTATION_MODE bit

6.3.1.6.1 Hall Sensor

The MC121 integrates a digital-latch Hall sensor to provide rotor position information to the commutation algorithm. The following sections highlight the details for device orientation and internal Hall signals to the commutation algorithm.

6.3.1.6.1.1 Field Direction Definition

The Hall sensor detects a positive magnetic field (B > 0mT) when the magnetic field lines exit through the surface of the hall sensor indicated in yellow in Figure 6-12. The SOT-23 flat lead package uses a flipped-chip construction so the hall sensor surface points toward the rotor magnet. In this orientation, the Hall sensor detects a positive magnetic field when a north pole passes below the package.

Copyright © 2026 Texas Instruments Incorporated

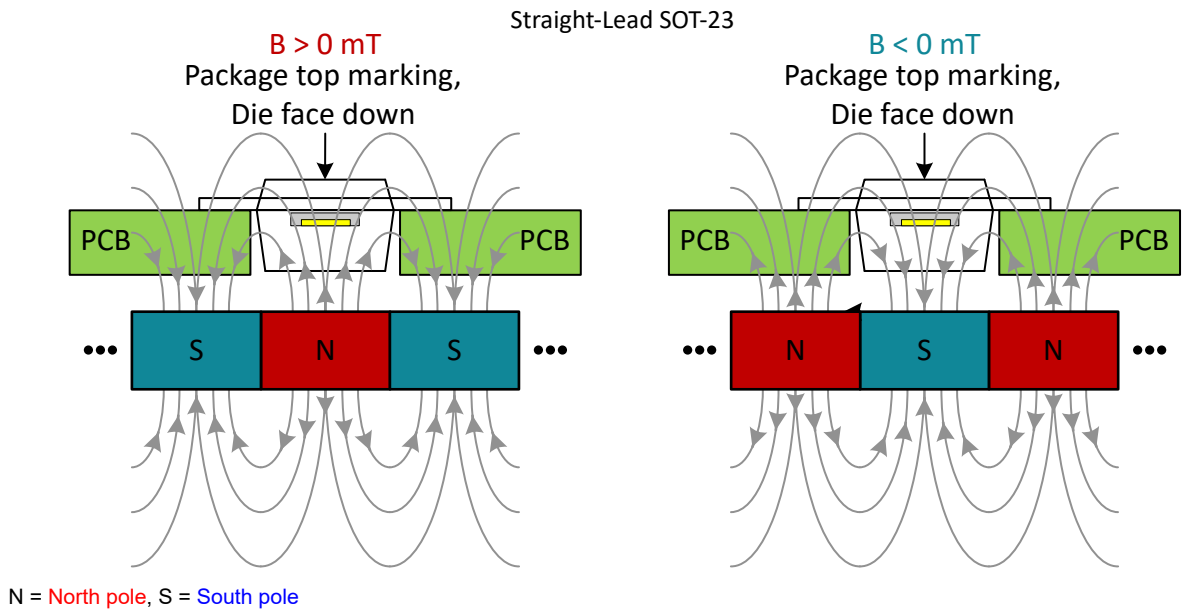

Figure 6-12. Field Direction Definition With Respect To Rotor Magnet And Driver

6.3.1.6.1.2 Internal Hall Latch Sensor Output

If the device is powered on with a magnetic field strength between B_{RP} and B_{OP}, then the internal Hall latch output signal is indeterminate. If the field strength is greater than B_{OP}, then the internal Hall latch output signal is low. If the field strength is less than B_{RP}, then the internal Hall latch output signal is high.

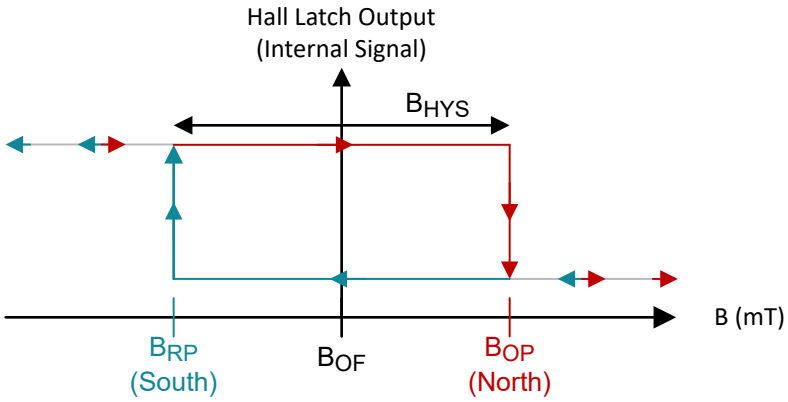

Figure 6-13. Internal Hall Output Signal

6.3.1.6.2 Hall Offset

MC121 provides the option of compensating the offset between hall latch sensor output and commutation due to the relative location of the hall sensor (in MC121) with respect to the back-emf zero cross. HALL_OS_ANGLE can be used to set the magnitude of the hall offset angle ranging from 0º to 43.6º in steps of 1.4º. The polarity of the offset of commutation with respect to hall latch output (commutation leading hall latch transition or commutation lagging hall latch transition) can be set using HALL_ANGLE_MODE.

A lead or lag time for commutation with respect to the Hall sensor output is needed to maximize the motor efficiency across speeds by aligning the motor phase current with back-emf. The lead/lag time ($t_{HALL_OS_TIME}$) can be set by HALL_OS_TIME from 0 to 2.6ms in steps of 10µs; the polarity of this time (commutation leading hall latch transition or commutation lagging hall latch transition) can be set using HALL_TIME_MODE.

Copyright © 2026 Texas Instruments Incorporated

MC121 aggregates the total lead or lag time (t_{HALL_OS}) that must be applied as per HALL_OS_ANGLE, HALL_ANGLE_MODE, HALL_OS_TIME and HALL_TIME_MODE and applies the computed lead or lag time around commutation region. For example, when HALL_OS_ANGLE is set to -15.4°, HALL_OS_TIME is set to 150µs, and the motor is operating at 500Hz, the applied lead-time is approximately 64.5µs. 15.4° at 500Hz corresponds to 85.5µs, so effective lead/lag time (t_{HALL_OS}) is (150-85.5)µs = 64.5µs.

6.3.1.6.3 Square Commutation

Square commutation is a simple commutation scheme provided by MC121 for maximum torque/speed operation. Figure 6-14 shows the driver output voltage relative to the Hall sensor signal in square commutation.

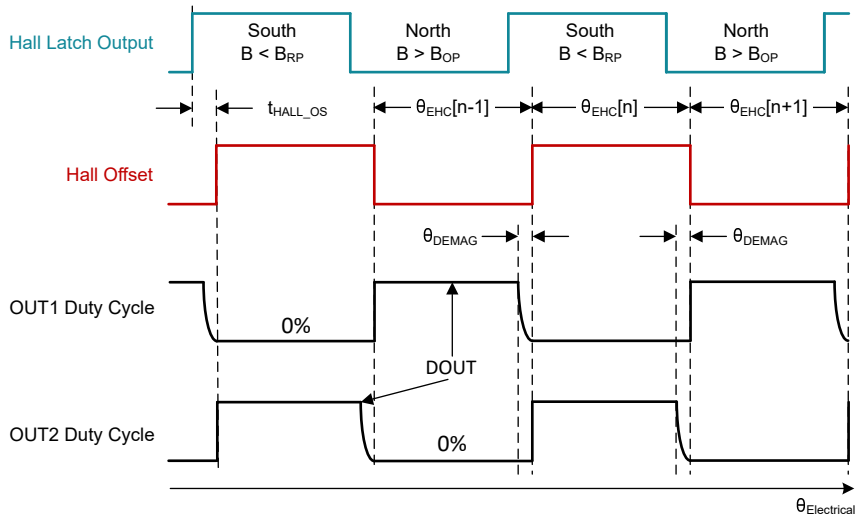

Figure 6-14. Square Commutation Timing Waveform

In square commutation, the output duty cycle remains constant at DOUT with respect to the electrical angle ($\theta_{Electrical}$). The signal from the Hall sensor and HALL_INVERT bit determines the OUTx terminal that switches at the commanded duty cycle and the OUTx terminal that is pulled to GND during the 180° electrical half cycle, θ_{EHC}.

The demagnetization state, θ_{DEMAG}, occurs at the end of the electrical half cycle and is determined by the DEMAG_TIME bits. The purpose of demagnetization is to reduce the motor current to zero and demagnetize the stator windings before reversing the OUTx voltage polarity due to a commutation event. Demagnetization minimizes voltage spikes on the VM supply and OUTx during commutation. Demagnetization also improves efficiency by reducing motor current spikes around the commutation region when back-EMF is minimal.

The demag time (DEMAG_TIME) can be set to a fixed time or can be automatically determined. When the AUTO_DEMAG_EN is set to 0x0, the demagnetization time is constant across operating conditions, and the DEMAG_TIME bits determine the θ_{DEMAG} based on speed of the motor during motor start, and steady state. When the AUTO_DEMAG_EN is set to 0x1, the driver automatically adjusts the θ_{DEMAG} angle to optimize the demagnetization duration based on the speed of the motor from the set DEMAG_TIME after pe-start phase.

6.3.1.6.4 Soft Commutation

In soft commutation scheme, after a commutation event, the PWM duty cycle ramps up to DOUT during the rise angle, θ_{SRISE} and ramps back down to 0% during fall angle, θ_{SFALL} as shown in Figure 6-15. The purpose of soft commutation is to reduce acoustic noise compared to square commutation. The timing of the hall sensor signal transitions determines the time duration of the θ_{SRISE} and θ_{SFALL} angles during the electrical half cycles. The θ_{SRISE} and θ_{SFALL} angles can be programmed using the SRISE and SFALL bits.

Copyright © 2026 Texas Instruments Incorporated

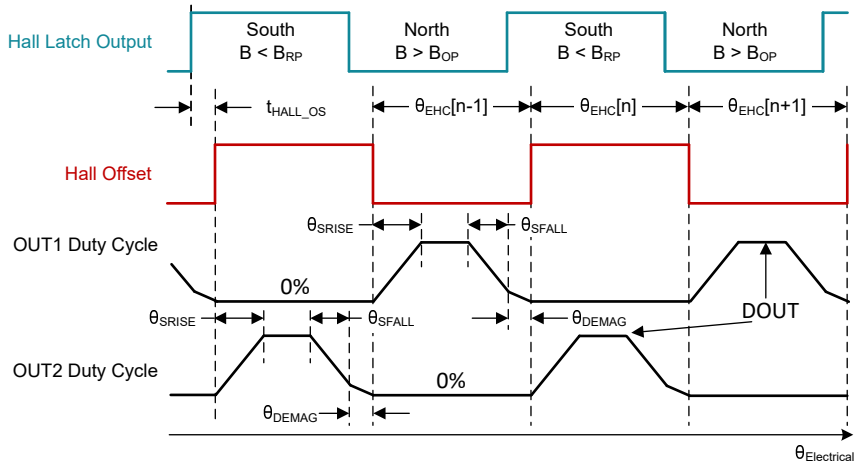

Figure 6-15. Soft Commutation Timing Waveform

When programming the SRISE, SFALL, and DEMAG_TIME bits, if the sum of θ_{SRISE}, θ_{SFALL}, and θ_{DEMAG} is greater than 180°, then θ_{SRISE} angle is reduced.

6.3.1.7 PWM Modulation Modes

The MC121 provides three PWM modulation modes: synchronous, asynchronous and hybrid. The PWM_MODE bits sets hybrid, synchronous, or asynchronous modulation for motor current during PWM OFF time and θ_{DEMAG} time, as described in Section 6.3.1.7. Figure 6-16, Figure 6-17, and Figure 6-18 show timing diagrams for asynchronous, synchronous, and hybrid recirculation states during θ_{DEMAG} respectively.

During synchronous mode, both low-side FETs turn on during the PWM OFF time. Synchronous mode reduces power loss by conducting the free-wheeling current through the FET instead of the body diode. However, depending on turn-off current and motor winding inductance, there can be reverse current conduction during synchronous modulation resulting in negative torque and lower motor speed.

During asynchronous mode, only one low-side FET remains on during the PWM OFF time while all other FETs are disabled and the freewheeling current is conducted through the body diode of the other low-side FET. In asynchronous mode, there is no reverse-current flow during PWM off time but the power loss can be higher due to body diode conduction.

The MC121 features a hybrid modulation scheme which combines both modes to reduce power loss during free-wheeling while preventing reverse-current flow.

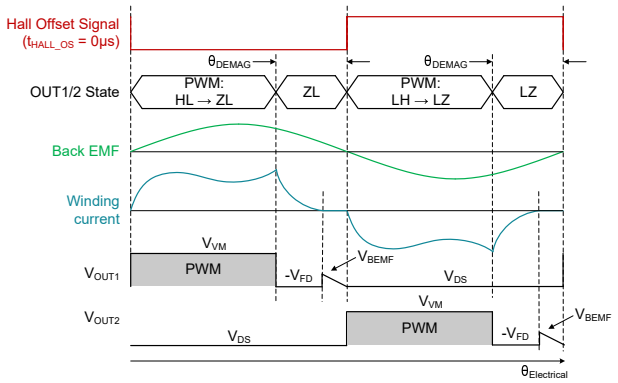

Figure 6-16. Detailed Timing Diagram for Square Commutation Using Asynchronous Mode for θ_{DEMAG}

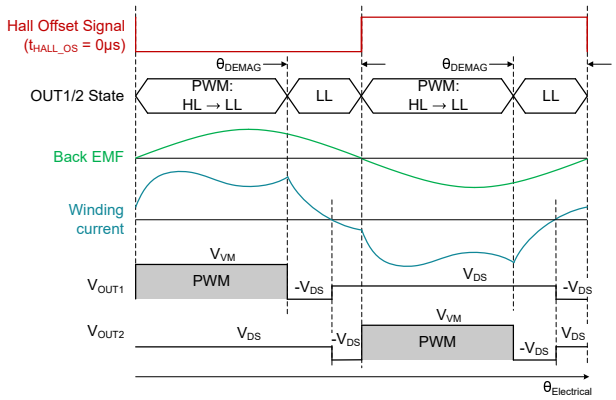

Figure 6-17. Detailed Timing Diagram for Square Commutation Using Synchronous Mode for θ_{DEMAG}

Copyright © 2026 Texas Instruments Incorporated

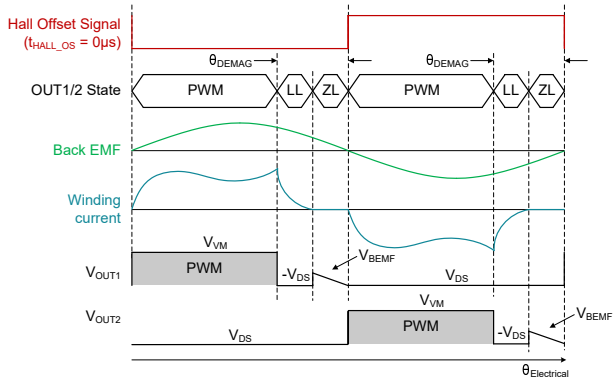

Figure 6-18. Detailed Timing Diagram for Square Commutation Using Hybrid Mode for θ_{DEMAG}

Table 6-1 shows the H-bridge states for the output PWM. H indicates HS FET in given OUTx leg is ON, L indicates LS FET in given OUTx leg is ON, Z indicates both FETs in given OUTx legs are in Hi-Z. The hall offset signal is the internal signal determined from the Hall sensor state and device settings. The hall offset signal determines the output switching states in the commutation algorithm state machine. The input PWM duty cycle and commutation mode (square/soft) determine the instantaneous output PWM duty cycle, DOUT.

Table 6-1. Output State Table

Driver State	Description	Modulation mode set by PWM_MODE	Hall Offset Signal	OUT1	OUT2
DOUT	PWM ON time/duty cycle	X	L	L	H
		X	H	H	L
(1-DOUT), Current Limiting, θ_{DEMAG}	Motor current recirculation during PWM OFF time/ duty or during current limiting off time, or phase demagnetization time before a commutation event	Asynchronous mode	L	L	Z
			H	Z	L
		Synchronous mode	X	L	L

Figure 6-19 shows the motor current flow through the H-bridge during PWM ON time, PWM OFF time, and demagnetization states. Refer to Section 6.3.1.6.3 for more details on demagnetization state.

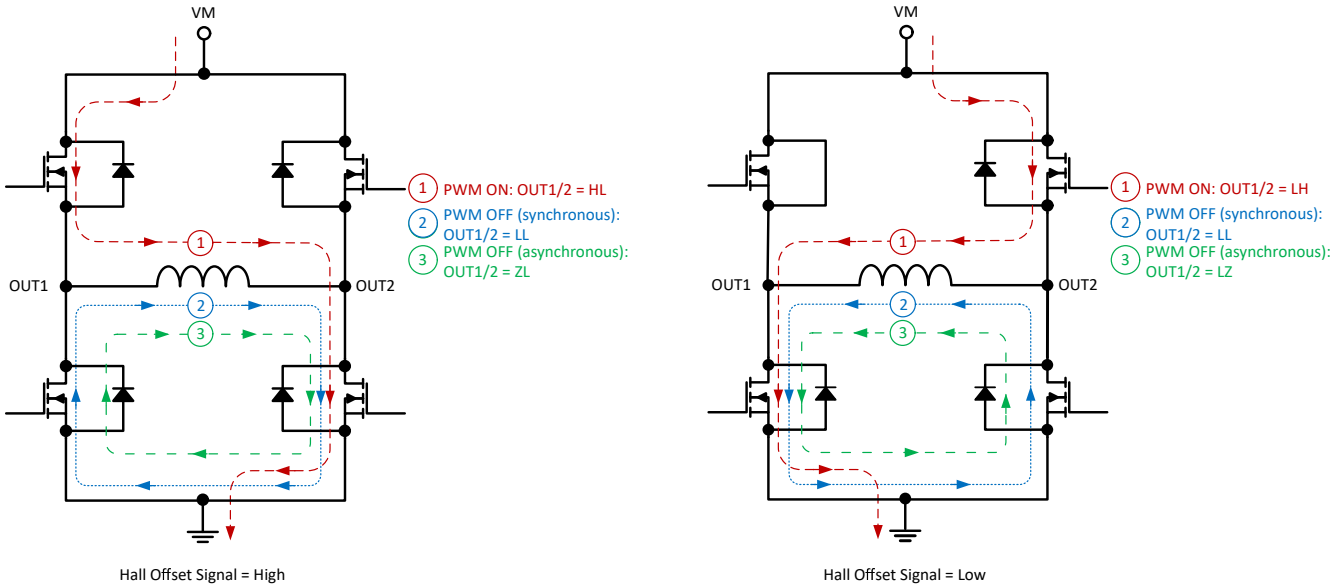

Figure 6-19. Motor Current and Output States

The hybrid PWM mode enables both low-side FETs during the PWM OFF time (same as synchronous mode) to avoid recirculating the motor current through the body diode. A, zero-current detector disables the applicable low-side FET to place the H-bridge in the asynchronous mode to prevent reverse-current flow. By automatically switching between synchronous and asynchronous modes during each PWM cycle, the MC121 reduces device power loss while avoiding back EMF generating unintended negative current in the motor winding.

Table 6-2 shows the settings for the PWM_MODE bits to configure the PWM modulation mode.

Table 6-2. Modulation Mode with PWM_MODE

PWM_MODE Bits	PWM and Current Limiting OFF Time	Demagnetization State
000b	Hybrid	Hybrid
001b	Hybrid	Asynchronous
010b	Asynchronous	Hybrid
011b	Synchronous	Hybrid
100b	Synchronous	Synchronous
101b	Synchronous	Asynchronous
110b	Asynchronous	Synchronous
111b	Asynchronous	Asynchronous

Copyright © 2026 Texas Instruments Incorporated

6.3.2 Protections

MC121 integrates protections for rotor lock, current limiting, overcurrent, VM undervoltage, VM overvoltage, and overtemperature events. Table 6-3 indicates the condition for fault mode entry and recovery to active mode.

Table 6-3. Device Fault Action and Response

FAULT	CONDITION	H-BRIDGE	DEVICE LOGIC	FG/RD pin fault Indication?	RECOVERY
Locked rotor protection	Hall transition not detected for t_{LRD} and LRD_RETRY_DIS = 0x0	All FETs disabled (Hi-Z)	Enabled	Yes	Auto retry after $t_{lock_long_retry}$ or $t_{lock_quick_retry}$
	Hall transition not detected for t_{LRD} for 5 consecutive start attempts and LRD_RETRY_DIS = 0x1	All FETs disabled (Hi-Z)			Latched; latched faults are cleared only by power reset or sleep wake-up
Current limit	I_{OUTx}(Low side) > I_{LIMIT}	HS FETs disabled and current recirculation through low side FETs based on PWM_MODE		No	I_{OUTx}(Low side) < I_{LIMIT} at the start of next output PWM duty cycle
Overvoltage protection	V_{VM} > V_{OVP} rising and OVP_EN=0x1	All FETs disabled (Hi-Z)		Yes, if FGRD_FAULT_SEL = 0x1 No, if FGRD_FAULT_SEL = 0x0	V_{VM} < V_{OVP} falling threshold
Overcurrent protection	I_{OUTx} > I_{OCP} and OCP_MODE = 0x0	All FETs disabled (Hi-Z)			Auto retry after $t_{lock_long_retry}$
	I_{OUTx} > I_{OCP} and OCP_RETRY_MODE = 0x1				Latched after 4 consecutive OCP events; latched faults are cleared only by power reset or sleep wake-up
Thermal Shutdown	T_J > T_{TSD}	All FETs disabled (Hi-Z)			T_J < T_{TSD} - T_{HYS}
Undervoltage protection	V_{VM} < V_{UVLO} falling	All FETs disabled (Hi-Z)	Disabled		V_{VM} > V_{UVLO} rising threshold
Integrated supply clamp	V_{VM} > V_{CLAMP} and VM_CLAMP_DIS = 0x0	HS FETs disabled (Hi-Z)	Enabled	No	V_{VM} < V_{CLAMP}

The FG/RD pin supports feedback to the fan controller for motor speed, rotor lock, or fault detection. Setting the FGRD_MODE bit to 0x0 configures the FG/RD pin for the frequency generator (FG) output. The transitions of the internal hall sensor signal determine the frequency of the FG signal. By setting the FG_MULTIPLIER bits, the FG pin toggles with a factor of 1/2, 1, 2/3, or 2 times the internal hall sensor frequency. The FG_MULTIPLIER bits help minimize system design and firmware changes when swapping motors with different number of magnetic pole pairs or phases. When FG_HALL_RAW_EN is set to 0x0, the FG pin signal corresponds to the hall offset signal used for frequency generator (FG) output. When FG_HALL_RAW_EN = 0x1, the FG pin signal corresponds to the hall latch sensor signal output. The MC121 does not apply FG_MULTIPLIER setting when FG_HALL_RAW_EN = 0x1.

The FG/RD pin indicates locked rotor condition, device faults, and active mode status according to Table 6-4. The state of the FG pin when motor is in stationary/idle (stopped by DIN = 0% or DOUT_TARGET = 0%) is always complementary to the state used to indicate a locked rotor or device fault condition. For example, if a combination of FGRD_MODE, FGRD_INVERT and FGRD_FAULT_SEL bits indicate locked rotor as an active low signal on FG pin, the state of the FG pin is high (through external pull-up) when the motor is in stationary/idle state.

Fault conditions are reported in the TEST_FAULT and TEST_FAULT_STATUS registers. The TEST_FAULT register provides the real-time status of active faults, while the TEST_FAULT_STATUS register contains fault indicators that persist until cleared by the host.

Copyright © 2026 Texas Instruments Incorporated

Table 6-4. FG/RD Pin Behavior

FGRD_MODE bit	FGRD_INVERT bit	FGRD_FAULT_SEL bit	Active Mode Indication	Locked rotor fault indication	OVP, OCP, TSD, UVLO fault indication
0x0	0x0	0x0	Toggling after 4 hall transitions	Asserted low	N/A
	0x0	0x1			Asserted low
	0x1	0x0	Inverted toggling after 4 hall transitions	Pulled high	N/A
	0x1	0x1			Pulled high
0x1	0x0	0x0	Pulled high	Asserted low	N/A
		0x1			Asserted low
	0x1	0x0	Asserted low	Pulled high	N/A
		0x1			Pulled high

6.3.2.1 Locked Rotor Protection

The MC121 provides locked rotor protection feature to disable all FETs (Hi-Z) when a hall transition is not detected for longer than the locked rotor detection time (t_{LRD}). A locked rotor fault is recognized and the FG/RD pin indicates the locked rotor fault according to Table 6-4. t_{LRD} is set by t_{LRD_START} during start-up sequence, while t_{LRD} is set by t_{LRD_RUN} during motor run (steady state). The locked rotor retry sequence (when LRD_RETRY_DIS = 0x0) during start-up is as shown in Figure 6-20.

During the first start-up after power-up or sleep wake-up, the number of quick retries is set by LRD_NRETRY_STARTUP. The quick retry time is same as the locked rotor detection time (t_{LRD_START}). If the locked rotor condition persists after LRD_NRETRY_STARTUP retries are completed, the MC121 enters a long retry time ($t_{lock_long_retry}$) which is set by LRD_LONG_RETRY_SEL x t_{LRD_START}. Once the long retry time lapses, the MC121 retries to spin the motor again. For the subsequent motor start-up retries, the number of quick retries is set by LRD_NRETRY_RUN while the locked rotor detection time (t_{LRD_START}) and quick retry time remain the same. If the locked rotor condition persists after LRD_NRETRY_RUN retries are completed, MC121 enters a long retry time ($t_{lock_long_retry}$) again. The subsequent motor start-up sequences uses the same retry pattern as the second start-up retry cycle as shown in Figure 6-20. Every motor start-up after retry time lapse (quick or long retry) is initiated from the pre-start phase as shown in Figure 6-6.

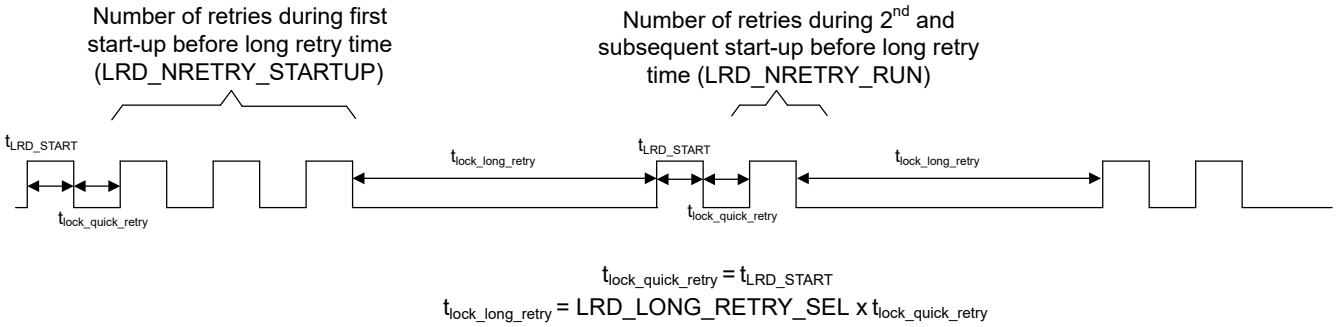

Figure 6-20. Locked rotor retry sequence and timing during start-up when LRD_RETRY_DIS = 0x0

During steady state operation, when a locked rotor condition is detected during motor run (no Hall transition for t_{LRD_RUN}), all FETs are in disabled (Hi-Z) and the FG/RD pin indicates the locked rotor fault according to Table 6-4. The number of retries when a locked rotor condition is detected during motor run is set by LRD_NRETRY_RUN. MC121 waits for one interval of long retry time before starting the locked rotor retry sequence again as shown in Figure 6-21.

Copyright © 2026 Texas Instruments Incorporated

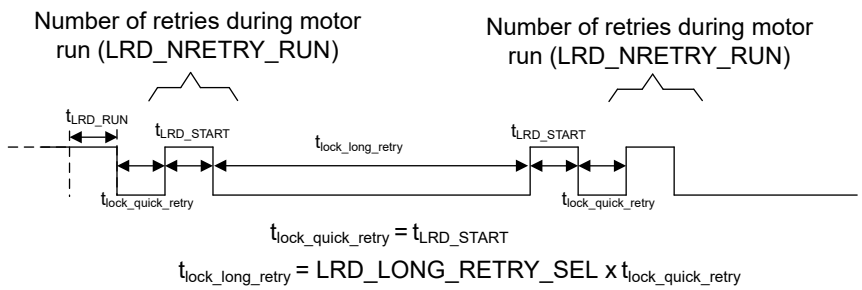

Figure 6-21. Locked rotor retry sequence and timing during run when LRD_RETRY_DIS = 0x0

MC121 provides the option of latching a locked rotor fault after 5 consecutive start tries result in a locked rotor by setting LRD_RETRY_DIS = 0x1 as shown in Figure 6-22. Motor operation can resumed either by a power reset or wake-up (sleep exit).

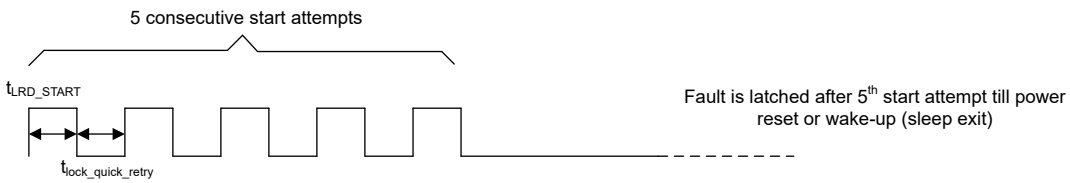

Figure 6-22. Locked rotor retry sequence and timing when LRD_RETRY_DIS = 0x1

6.3.2.2 Current Limit

The MC121 provides a configurable output current limit feature to protects the motor from overcurrent operation during start-up, overload and stall conditions. When the motor phase current exceeds the I_{LIMIT} threshold, the MC121 uses a cycle-by-cycle current limit scheme by turning off the high-side FET. ILIMIT_SEL sets the current limit threshold. The PWM_MODE bits set synchronous, asynchronous, or hybrid recirculation states for motor current during the current limiting OFF time, similar to the PWM OFF time described in Section 6.3.1.7.

If the motor current remains above the I_{LIMIT} threshold at the start of the next PWM period, then the low-side FETs remain enabled for another PWM period. If the motor current drops below I_{LIMIT} by the start of the next PWM period, the outputs return to the driving state determined by the commutation algorithm state machine as shown in Table 6-1.

Current limiting provides an upper limit to the motor torque by reducing the output PWM duty cycle when motor current is above the I_{LIMIT} threshold. The current limit function takes priority over the PWM duty cycle determined by the commutation state machine. When the motor current drops below the I_{LIMIT} threshold, the commutation state machine has full control of the output duty cycle. Figure 6-23and Figure 6-24 show example waveforms of the cycle-by-cycle current limiting scheme.

The MC121 applies a configurable blanking time on the I_{LIMIT} at the start of every PWM. The blanking time can be configured by setting the ILIM_BLANK_SEL bits. The I_{LIMIT} also has a configurable deglitch time. The deglitch time can be configured with ILIM_DEGLITCH_SEL bits.

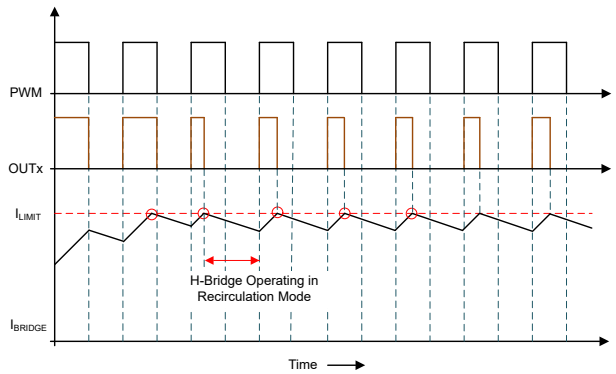

Figure 6-23. Cycle-by-Cycle Current-Limit Operation

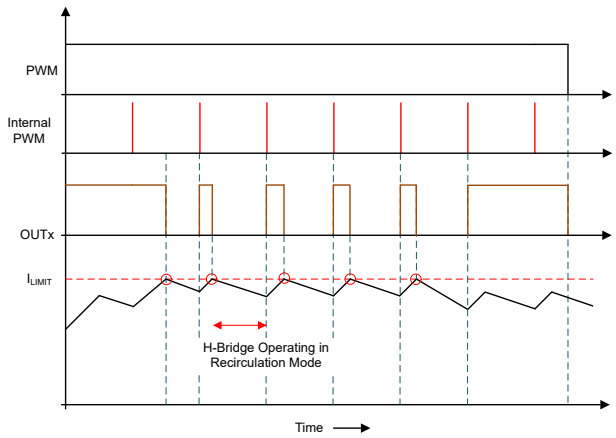

Figure 6-24. Cycle-by-Cycle Current-Limit Operation with 100% PWM Duty Cycle

6.3.2.3 Overcurrent Protection (OCP)

The MC121 provides an overcurrent protection (OCP) feature to protect the integrated power FETs on the OUTx pins from shorts to the supply (VM), ground, and between the OUTx pins. When the current through a FET stays higher than the OCP threshold (I_{OCP}) for longer than the OCP deglitch time (t_{OCP}) as shown in Figure 6-25, all FETs in the H-bridge are disabled (Hi-Z) and the FG/RD pin indicates the fault according to Table 6-4. The OCP fault recovery is set by OCP_RETRY_MODE.

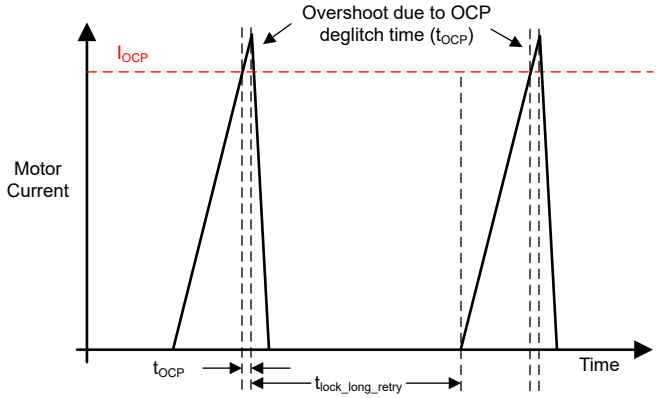

Figure 6-25. OCP Operation

When OCP_RETRY_MODE is set to 0x0, the MC121 starts driving the motor (from pre-start phase) after $t_{lock_long_retry}$ lapses as shown in Figure 6-26. $t_{lock_long_retry}$ is set by (LRD_LONG_RETRY_SEL x t_{LRD_START}). When OCP_RETRY_MODE is set to 0x1, the MC121 latches the fault after 3 retry attempts (retry time is set by $t_{lock_long_retry}$) or 4 OCP events. Subsequent motor operation is possible only after a power reset or wake-up (sleep exit) to clear the fault condition.

Copyright © 2026 Texas Instruments Incorporated

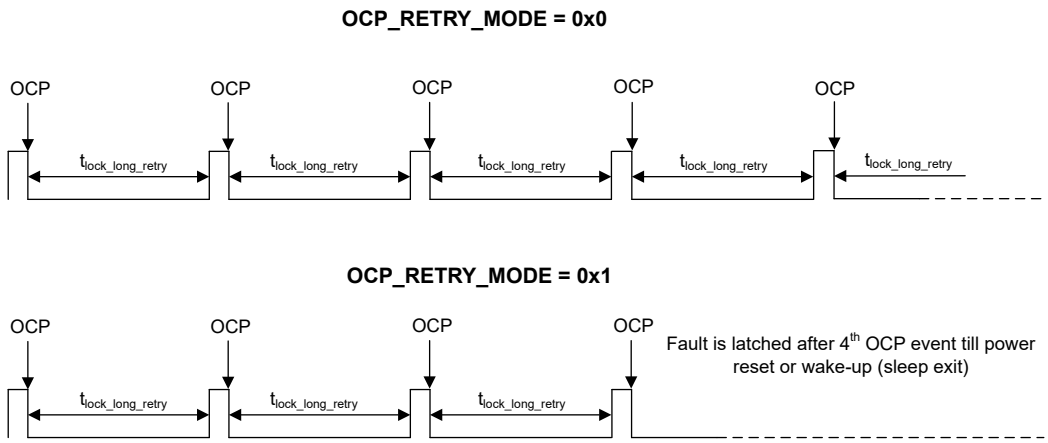

Figure 6-26. OCP retry Modes

6.3.2.4 VM Undervoltage Lockout (UVLO)

The MC121 provides an undervoltage lockout feature to disable all circuitry in the device when the voltage on the VM pin falls below the UVLO falling threshold voltage, V_{UVLO}. The internal logic is reset if the VM falls below the power on reset (VM_{POR}) falling threshold.. When UVLO_SEL = 0x0, device powers up and motor operation resumes when the V_{VM} voltage rises above the UVLO rising threshold as shown in Figure 6-27. When UVLO_SEL ≠ 0x0, device always powers-up at UVLO rising threshold corresponding to UVLO_SEL = 0x0 but the motor operation begins only when VM rises above the UVLO rising threshold set by the UVLO_SEL bits. When UVLO_SEL ≠ 0x0 and 3.15 < VM < V_{UVLO} (rising) (corresponding to set UVLO_SEL), VM UVLO fault is active, all FETs are disabled and the FG/RD pin indicates the fault according to Table 6-4.

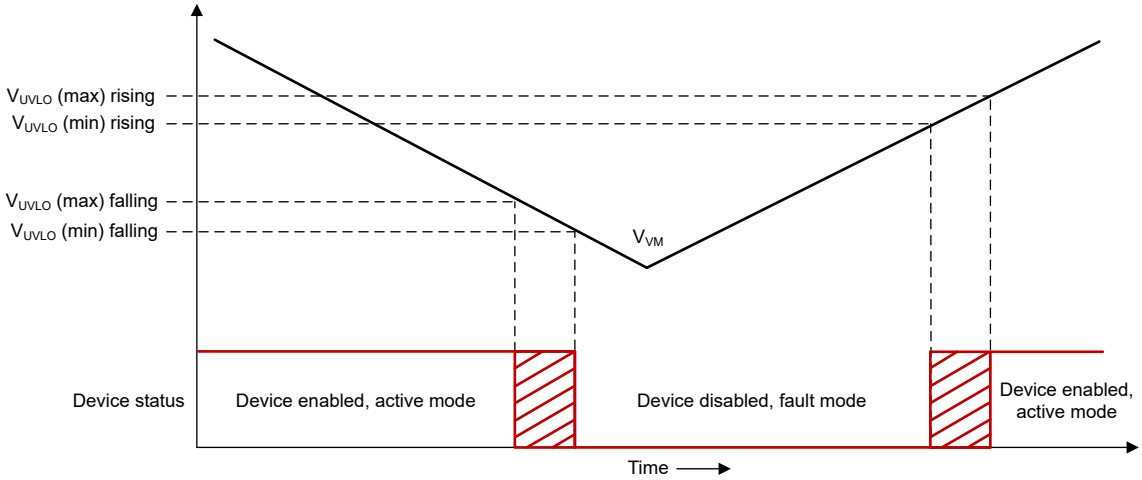

Figure 6-27. VM UVLO Operation

6.3.2.5 VM Over Voltage Protection (OVP)

The MC121 provides an over-voltage protection feature to disable all FETs (Hi-Z) when the VM voltage exceeds the V_{OVP} rising threshold. The FG/RD pin indicates the fault according to Table 6-4. When the VM voltage drops below the V_{OVP} falling threshold, normal device operation resumes. The OVP threshold is set by OVP_SEL and can be enabled by setting OVP_EN to 0x1. When OVP_EN = 0x1, the OVP is blanked when there is a change in the speed command (DOUT_TARGET) detected during acceleration or deceleration.

The OVP has a fixed deglitch time of 70µs to eliminate spurious OVP triggers. To avoid false OVP triggers due to transient VM spikes during normal motor operation, the overvoltage protection is disabled during the rise and fall intervals of soft commutation. In addition, OVP is always disabled during the demagnetization interval. The MC121 provides a configurable blanking time set by OVP_BLANK_EN = 0x1. When OVP_BLANK_EN = 0x1,

the blanking is provided during the peak duty cycle interval to improve OVP detection robustness and can be set to 1ms or 4ms with OVP_BLANK_SEL bits. Figure 6-28 shows the OVP detection operation in different intervals of soft commutation. In square commutation, there are no rise/fall intervals and the blanking time, when enabled, is applied from the commutation instant.

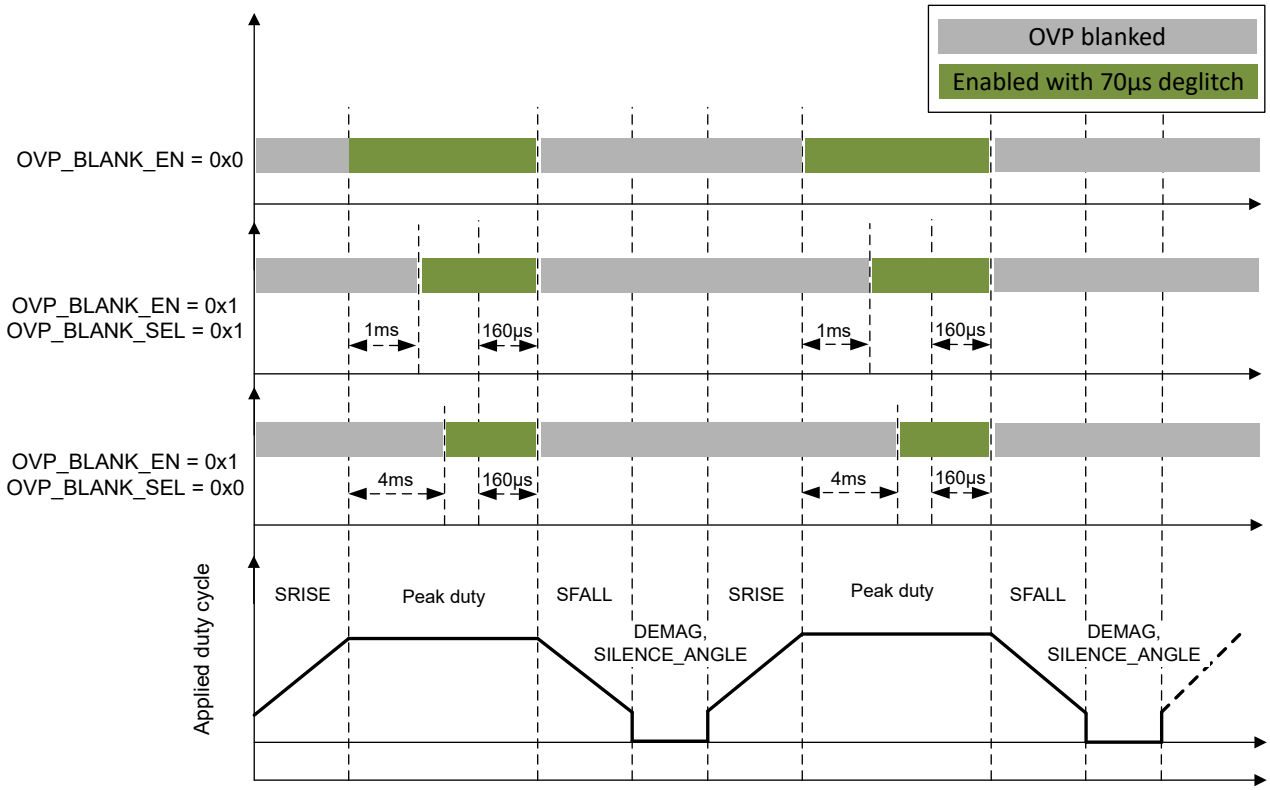

Figure 6-28. OVP Detection

6.3.2.6 Thermal Shutdown (TSD)

The MC121 provides a thermal shutdown feature if the die temperature exceeds T_{TSD}. All FETs in the H-bridge are disabled during thermal shutdown and the FG/RD pin indicates the fault according to Table 6-4. After the die temperature has fallen to a safe level (T_{TSD} - T_{HYS}), device operation automatically resumes.

6.3.2.7 Integrated Supply (VM) Clamp

The MC121 provides an integrated clamp feature to limit the voltage spikes on VM pin due to regenerative energy push-back from the motor. The clamp is disabled when VM_CLAMP_DIS is set to 0x1. When the VM voltage reaches V_{CLAMP} specification, the device activates the clamp to limit the VM pin voltage. When the clamp is active, HS FETs are in Hi-Z and motor driving is stopped. The clamp circuit is able to absorb the energy till the clamp circuit reaches the limits specified by the Safe Operating Area (SOA). When the SOA limits are exceeded, the clamp is deactivated. In cases where higher energy (than specified by SOA) is needed to be clamped an appropriate external TVS diode must be added.

Note

During the clamp operation, if an overtemperature (TSD) fault is encountered, the clamp is deactivated till the TSD fault is cleared.

6.4 Device Functional Modes

Copyright © 2026 Texas Instruments Incorporated

6.4.1 Active Mode

When the V_{VM} voltage is greater than the V_{UVLO} voltage and D_{IN} > 0%, the device goes to active mode. The t_{WAKE} time must elapse before the device responds to inputs.

6.4.2 Sleep and Standby Mode

The MC121 features a low power sleep mode and can be enabled by configuring SLEEP_EN = 0x1. In sleep mode (SLEEP_EN = 0x1 and DIN = 0%), the device draws very low quiescent current from the VM pin (I_{VMQ}) by disabling internal circuitry including FETs, hall sensor, current sense, digital core, internal regulators, and charge pump. The device wakes up and enters active (STBY_EN = 0x0) or standby (STBY_EN = 0x1) mode, when DIN > 0% for t_{WAKE} when in PWM input mode (PWMDC_MODE = 0x0). In analog input mode (PWMDC_MODE = 0x1), to wake up the device from sleep, the voltage at PWM/DC pin must be greater than V_{IH} for t_{WAKE}.

When sleep mode is disabled (SLEEP = 0x0), STBY_EN decides the device operation across DIN < DIN0. When DIN < DIN0 and STBY_EN = 0x0, MC121 drives the motor at duty or speed corresponding to DOUT0. When DIN < DIN0 and STBY_EN = 0x1, MC121 stops the motor operation (DOUT = 0%) and is in standby state.

Irrespective of SLEEP_EN and STBY_EN values, when DIN_OFF > DIN ≥ (DIN0 + DIN_HYS), MC121 drives the motor at duty or speed set by the duty curve. Table 6-5 summarizes the MC121 operation during the sleep and standby mode.

Note

DIN = 0% corresponds to duty cycle of 0% in PWM input mode (PWMDC_MODE = 0x0) and a DC voltage < $V_{DC_0\%}$ in DC (analog) input mode (PWMDC_MODE = 0x1).

Table 6-5. Summary of sleep/standby mode operation

SLEEP_EN	STBY_EN	Condition for Device Status Change	Device Status	DOUT	H-Bridge State
0x0	0x0	DIN < DIN0	Active Mode	DOUT0	PWM
	0x1		Standby Mode	0%	Hi-Z
X	X	DIN_OFF > DIN ≥ (DIN0 + DIN_HYS)	Active Mode	Set by DIN as per duty curve	PWM
0x1	X	DIN = 0%; refer Figure 6-8	Sleep Mode	0%	Hi-Z
0x1	0x0	0% < DIN < DIN0	Active Mode	DOUT0	PWM
	0x1		Standby Mode	0%	Hi-Z

6.4.3 Fault Mode

The MC121 is protected against system faults described in Section 6.3.2. In some cases, the commutation algorithm can be interrupted, and the device needs to restart the motor.

6.4.4 Test Mode and One-Time Programmable Memory

The MC121 provides a test programming mode where the PWM/DC and FG/RD pins support an I^2C interface for device configuration and testing. The I^2C interface also gives access to the one-time programmable (OTP) memory in OTP programming mode. Figure 6-29 shows the basic hardware configuration for configuring and programming the MC121.

Copyright © 2026 Texas Instruments Incorporated

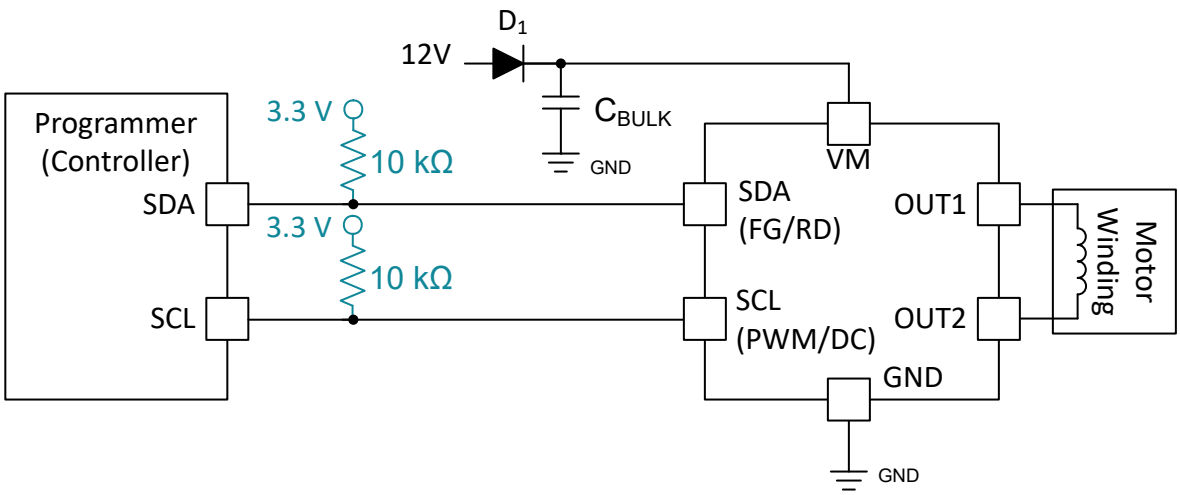

Figure 6-29. I²C Programmer and Fan Module

The MC121 enters test programming mode and OTP programming mode with the following procedure.

1. Pull the FG/RD pin low and apply a high frequency signal in the range of (416-833) kHz at any duty between (20-80)% for 16 to 20 cycles to the PWM/DC pin to enter the test programming mode. The I²C interface is active in test programming mode.
2. Communicate with MC121 over I²C to read and write to the registers in Section 7 to configure the registers to the desired configuration.
3. To maintain reliable OTP memory programming through I²C communication, maintain the MC121 power supply pin voltage (VM) above 8V throughout the entire duration of the communication.
4. Write the OTP programming mode entry key 02h, 01h, 04h to the USR_OTP_PRG_UNLOCK register in successive write-frames to unlock OTP programming mode.
5. To permanently program the OTP memory, write 1b to the USR_OTP_PROG_ALL bit in USR_OTP_CFG Register.

6.5 Programming

The MC121 supports I²C programming for in test programming mode and OTP programming. Section 6.4.4 describes the method to enter test mode to read and write to the registers and to program the enter the OTP programming mode to program the OTP memory during system prototyping and production. External programming hardware or an on-board microcontroller can interface with the MC121 over the I²C interface. The following sections describe the details of the I²C communication protocol.

6.5.1 I²C Communication

The I²C bus consists of a data line (SDA) and a clock line (SCL) with off-chip pull-up resistors. When the bus is idle, both SDA and SCL lines are pulled high.

A controller device, usually a microcontroller or a digital signal processor, controls the bus. The controller is responsible for generating the SCL signal and device addresses. The controller also generates specific conditions that indicate the START and STOP of data transfer. A peripheral device receives and/or transmits data on the bus under control of the controller device. The MC121 is the peripheral device on the I²C bus in this context.

The device address of the MC121 is 0x65.

6.5.1.1 I²C Read

The I²C read operation begins similarly to a write operation. The controller device sends a START condition on the bus with the 7-bit address of the peripheral device and the R/W bit set to 0b. After the peripheral

Copyright © 2026 Texas Instruments Incorporated

device responds with an acknowledge signal (ACK), the controller device sends the 8-bit address of the register intended to receive the data. After the peripheral device responds with an ACK signal again, the controller device re-sends the START command, RSTRT, followed by the peripheral address with the R/W bit set to 1b to signify a read operation. The controller device releases the SDA line to receive the register data from the peripheral device. The peripheral responds with an ACK signal to indicate that the peripheral is ready to transmit the register data.

The controller device continues providing a clock signal to the peripheral device. The peripheral device sends the 8-bit register data on the SDA line each clock cycle. At the end of the byte, the controller device sends a negative-acknowledge (NACK) signal, signaling to the peripheral device to stop communications and release the bus. The controller device then sends a STOP condition.

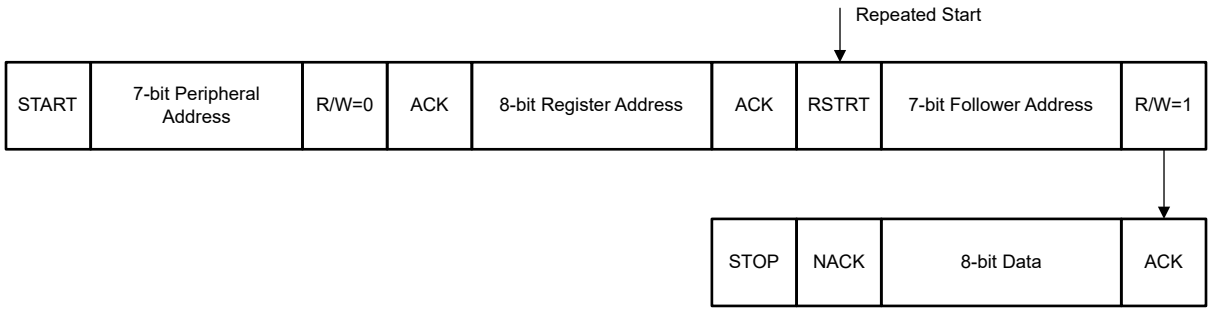

Figure 6-30. I²C Read Sequence

6.5.1.2 I²C Write

To write on the I²C bus, the controller device sends a START condition on the bus with the 7-bit address of the peripheral device and the R/W bit set to 0b to signify a write operation. After the peripheral device responds with an acknowledge bit (ACK), the controller device sends the 8-bit address of the register intended to receive the data. After the peripheral device responds with an ACK bit again, the controller device sends the 8-bit data. The peripheral device responds with a final ACK bit, and the controller terminates the transmission with a STOP condition.

Figure 6-31. I²C Write Sequence

7 Register Map

Table 7-1 list the register maps for programming the MC121 in test programming mode and OTP programming mode. The USER_OTP map (addresses 0x00 to 0x1B) includes OTP registers available for programming during prototyping and end-system production. The USR_TM register map (addresses 0x20 to 0x26) offer configurations to allow system designers to read faults and speed or configure device settings like speed input during system prototyping and development. Burned OTP registers keep written data after power cycle. After burning OTP, the registers can receive new data in test mode, but the burned OTP values are the device defaults when the device power cycles. The test mode registers, USR_TM are not OTP memory registers and are reset during a power cycle.

Copyright © 2026 Texas Instruments Incorporated

7.1 USR_OTP Registers

Table 7-1 lists the memory-mapped registers for the USR_OTP registers. All register offset addresses not listed in Table 7-1 should be considered as reserved locations and the register contents should not be modified.

Table 7-1. USR_OTP Registers

Offset	Acronym	Register Name	Section
0h	INTERFACE_CONFIG0	Interface Configuration Register 0	Section 7.1.1
1h	INTERFACE_CONFIG1	Interface Configuration Register 1	Section 7.1.2
2h	START_STOP_CONFIG	Start and Stop Configuration Register	Section 7.1.3
3h	DIN0	DIN0 Setting	Section 7.1.4
4h	DOUT0	DOUT0 Setting	Section 7.1.5
5h	DOUT1	DOUT1 Setting	Section 7.1.6
6h	DOUT2	DOUT2 Setting	Section 7.1.7
7h	DOUT3	DOUT3 Setting	Section 7.1.8
8h	DOUT4	DOUT4 Setting	Section 7.1.9
9h	DOUT5	DOUT5 Setting	Section 7.1.10
Ah	DOUT6	DOUT6 Setting	Section 7.1.11
Bh	DOUT7	DOUT7 Setting	Section 7.1.12
Ch	DOUT8	DOUT8 Setting	Section 7.1.13
Dh	HALL_TIME_CONFIG	Configuration Register for Hall Offset Time	Section 7.1.14
Eh	COMMUTATION_CONFIG0	Commutation Configuration Register 0	Section 7.1.15
Fh	COMMUTATION_CONFIG1	Commutation Configuration Register 1	Section 7.1.16
10h	COMMUTATION_CONFIG2	Commutation Configuration Register 2	Section 7.1.17
11h	COMMUTATION_CONFIG3	Commutation Configuration Register 3	Section 7.1.18
12h	PROTECTION_CONFIG	Configuration Register for Protection Settings	Section 7.1.19
13h	CLOSED_LOOP_CONFIG0	Least Significant byte of MAX_SPEED	Section 7.1.20
14h	CLOSED_LOOP_CONFIG1	KI_RATIO and MSN of MAX_SPEED in closed loop and DOUT_MAX in Open loop	Section 7.1.21
15h	CLOSED_LOOP_CONFIG2	KP_RATIO in closed loop and LRD settings	Section 7.1.22
16h	GENERAL_CONFIG0	Register for Protections and PWM Dithering	Section 7.1.23
17h	GENERAL_CONFIG1	Register for ILIM_SEL, Hall and LRD settings	Section 7.1.24
18h	GENERAL_CONFIG2	Register for VM clamp, Prestart ramp and Hall Settings	Section 7.1.25
19h	GENERAL_CONFIG3	Register for Silence, Pole pair, LRD settings	Section 7.1.26
1Ah	GENERAL_CONFIG4	Configuration Register for DEMAG and Silence settings	Section 7.1.27
1Bh	USR_OTP_CRC	Register for CRC calculated over USR_OTP	Section 7.1.28

Complex bit access types are encoded to fit into small table cells. Table 7-2 shows the codes that are used for access types in this section.

Table 7-2. USR_OTP Access Type Codes

Access Type	Code	Description
Read Type		
R	R	Read
Write Type		
W	W	Write
Reset or Default Value		
-n		Value after reset or the default value

7.1.1 INTERFACE_CONFIG0 Register (Offset = 0h) [Reset = 00h]

INTERFACE_CONFIG0 is shown in Table 7-3.

Return to the Summary Table.

Table 7-3. INTERFACE_CONFIG0 Register Field Descriptions

Bit	Field	Type	Reset	Description
7	HALL_DEGLITCH_SEL	R/W	0h	Enables deglitch of HALL signal from HALL sensor 0h = 1µs hall deglitch time 1h = 2µs hall deglitch time
6	PWM_IN_RANGE	R/W	0h	Selects the input PWM signal frequency detection range 0h = 80Hz to 90kHz 1h = 20Hz to 22kHz
5	PWM_OUT_FREQ	R/W	0h	Selects the PWM switching Frequency on the OUTx 0h = Output PWM frequency is 25kHz 1h = Output PWM frequency is 50kHz
4-3	ILIM_BLANK_SEL	R/W	0h	Selects additional blanking time for current limit (ILIMIT) on top of deadtime and default blanking 0h = No additional blanking 1h = 160ns additional blanking 2h = 320ns additional blanking 3h = 640ns additional blanking
2	ILIM_DEGLITCH_SEL	R/W	0h	Selects the deglitch time for cycle by cycle current limit (ILIMIT). 0h = 600ns deglitch time 1h = 1.2µs deglitch time
1-0	UVLO_SEL	R/W	0h	Selects the threshold at which under-voltage lockout gets triggered 0h = Rising threshold 3V and falling threshold 2.7V 1h = Rising threshold 4.2V and falling threshold 2.7V 2h = Rising threshold 5.7V and falling threshold 2.7V 3h = Rising threshold 7.6V and falling threshold 2.7V

Copyright © 2026 Texas Instruments Incorporated

7.1.2 INTERFACE_CONFIG1 Register (Offset = 1h) [Reset = 60h]

INTERFACE_CONFIG1 is shown in Table 7-4.

Return to the Summary Table.

Table 7-4. INTERFACE_CONFIG1 Register Field Descriptions

Bit	Field	Type	Reset	Description
7-6	DIN_HYS	R/W	1h	Selects duty cycle hysteresis DIN_HYS for speed curve. 0h = 0%, no hysteresis 1h = 1.2% 2h = 2.4% 3h = 4.8%
5	STBY_EN	R/W	1h	Enables or disables standby mode. Standby mode determines the OUTx behavior at DIN = 0%. 0h = The driver commutates the motor at the DOUT0 duty cycle. 1h = The driver disables the outputs after t_{SLEEP}, but all internal circuitry remains active for faster re-enable.
4	SLEEP_EN	R/W	0h	Enables sleep mode when DIN = 0%. 0h = Sleep mode is disabled. The driver state is determined by the STBY_EN bit. 1h = Sleep mode is enabled. DOUT ramps down to 0% output duty cycle, and the driver goes into a low-power sleep mode after receiving no Hall edge for t_{SLEEP}.
3	PWMDC_MODE	R/W	0h	Selects speed input mode between PWM or analog. 0h = The PWM pin accepts a logic PWM duty cycle to control speed. 1h = The PWM pin accepts an analog voltage to control motor speed.
2	FGRD_INVERT	R/W	0h	Selects FG/RD pin logic level during rotor lock or device fault. 0h = FG/RD pin asserted low during rotor lock or device fault. 1h = FG/RD pin asserted high during rotor lock or device fault.
1	FGRD_MODE	R/W	0h	Selects functionality of FG/RD pin. 0h = FG speed feedback output 1h = RD rotor lock detection or fault output
0	FGRD_FAULT_SEL	R/W	0h	Selects whether FG/RD pin reports device faults. 0h = FG/RD pin reports rotor lock faults only 1h = FG/RD reports rotor lock, overvoltage, overcurrent, thermal shutdown, and undervoltage fault conditions

Copyright © 2026 Texas Instruments Incorporated

7.1.3 START_STOP_CONFIG Register (Offset = 2h) [Reset = 89h]

START_STOP_CONFIG is shown in Table 7-5.

Return to the Summary Table.

Table 7-5. START_STOP_CONFIG Register Field Descriptions

Bit	Field	Type	Reset	Description
7	RAMP_ON_STOP_DIS	R/W	1h	Selects whether to ramp duty cycle down to zero while stopping or immediately apply zero duty at stop command 0h = Ramp duty cycle down to zero based on PWM_RAMP_EN, PWM_RAMP_SEL and PWM_DECEL_SEL bits 1h = Immediately Set FETs to HiZ when motor stop command is received
6-5	DIN_OFF	R/W	0h	Selects threshold of input duty cycle above which output duty cycle is zero 0h = Disabled; no value of input duty cycle above which DOUT is 0 1h = When input duty cycle ≥ 90%, DOUT is mapped to 0% 2h = When input duty cycle ≥ 95%, DOUT is mapped to 0% 3h = When input duty cycle equals 100% DOUT is mapped to 0%
4-2	DOUT_MIN	R/W	2h	Selects minimum value that the DOUT is clamped to, if input duty cycle is between DIN0 and DINOFF 0h = 0% 1h = 5% 2h = 10% 3h = 12.5% 4h = 15% 5h = 20% 6h = 25% 7h = 30%
1-0	DOUT_START	R/W	1h	Selects the DOUT to be applied when motor starts up. DOUT is ramped to target duty cycle from this initial value. 0h = 12.5% of DOUT_MAX in Open Loop and 12.5% in Closed Loop 1h = 25% of DOUT_MAX in Open Loop and 25% in Closed Loop 2h = 50% of DOUT_MAX in Open Loop and 50% in Closed Loop 3h = 100% of DOUT_MAX in Open Loop and 100% in Closed Loop

Copyright © 2026 Texas Instruments Incorporated

7.1.4 DIN0 Register (Offset = 3h) [Reset = 16h]

DIN0 is shown in Table 7-6.

Return to the Summary Table.

Table 7-6. DIN0 Register Field Descriptions

Bit	Field	Type	Reset	Description
7-0	DIN0	R/W	16h	Sets the minimum input duty cycle DIN, that the speed curve accepts. DIN = 100%*DIN0/255 0h = 0% 1h = 0.39126% 16h = 8.8% (default) FFh = 100%

7.1.5 DOUT0 Register (Offset = 4h) [Reset = 1Ah]

DOUT0 is shown in Table 7-7.

Return to the Summary Table.

Table 7-7. DOUT0 Register Field Descriptions

Bit	Field	Type	Reset	Description
7-0	DOUT0	R/W	1Ah	Sets the output duty DOUT when DIN ≤ DIN0 DOUT = 100%*DOUT0/255 0h = 0%, all FETs off, putting the driver in a HiZ state 1h = 0.39126% 1Ah = 10.2% (default) FFh = 100%

Copyright © 2026 Texas Instruments Incorporated

7.1.6 DOUT1 Register (Offset = 5h) [Reset = 20h]

DOUT1 is shown in Table 7-8.

Return to the Summary Table.

Table 7-8. DOUT1 Register Field Descriptions

Bit	Field	Type	Reset	Description
7-0	DOUT1	R/W	20h	Sets the output duty DOUT when DIN = 12.5% DOUT = 100%*DOUT1/255 0h = 0%, both outputs remain low, putting the driver in a brake state 20h = 12.5% (default) FFh = 100%

7.1.7 DOUT2 Register (Offset = 6h) [Reset = 40h]

DOUT2 is shown in Table 7-9.

Return to the Summary Table.

Table 7-9. DOUT2 Register Field Descriptions

Bit	Field	Type	Reset	Description
7-0	DOUT2	R/W	40h	Sets the output duty DOUT when DIN = 25% DOUT = 100%*DOUT1/255 0h = 0%, both outputs remain low, putting the driver in a brake state 40h = 25% (default) FFh = 100%

Copyright © 2026 Texas Instruments Incorporated

7.1.8 DOUT3 Register (Offset = 7h) [Reset = 60h]

DOUT3 is shown in Table 7-10.

Return to the Summary Table.

Table 7-10. DOUT3 Register Field Descriptions

Bit	Field	Type	Reset	Description
7-0	DOUT3	R/W	60h	Sets the output duty DOUT when DIN = 37.5% DOUT = 100%*DOUT1/255 0h = 0%, both outputs remain low, putting the driver in a brake state 60h = 37.5% (default) FFh = 100%

7.1.9 DOUT4 Register (Offset = 8h) [Reset = 80h]

DOUT4 is shown in Table 7-11.

Return to the Summary Table.

Table 7-11. DOUT4 Register Field Descriptions

Bit	Field	Type	Reset	Description
7-0	DOUT4	R/W	80h	Sets the output duty DOUT when DIN = 50% DOUT = 100%*DOUT1/255 0h = 0%, both outputs remain low, putting the driver in a brake state 80h = 50% (default) FFh = 100%

Copyright © 2026 Texas Instruments Incorporated

7.1.10 DOUT5 Register (Offset = 9h) [Reset = A0h]

DOUT5 is shown in Table 7-12.

Return to the Summary Table.

Table 7-12. DOUT5 Register Field Descriptions

Bit	Field	Type	Reset	Description
7-0	DOUT5	R/W	A0h	Sets the output duty DOUT when DIN = 62.5% DOUT = 100%*DOUT1/255 0h = 0%, both outputs remain low, putting the driver in a brake state A0h = 62.5% (default) FFh = 100%

7.1.11 DOUT6 Register (Offset = Ah) [Reset = C0h]

DOUT6 is shown in Table 7-13.

Return to the Summary Table.

Table 7-13. DOUT6 Register Field Descriptions

Bit	Field	Type	Reset	Description
7-0	DOUT6	R/W	C0h	Sets the output duty DOUT when DIN = 75% DOUT = 100%*DOUT1/255 0h = 0%, both outputs remain low, putting the driver in a brake state C0h = 75% (default) FFh = 100%

Copyright © 2026 Texas Instruments Incorporated

7.1.12 DOUT7 Register (Offset = Bh) [Reset = E0h]

DOUT7 is shown in Table 7-14.

Return to the Summary Table.

Table 7-14. DOUT7 Register Field Descriptions

Bit	Field	Type	Reset	Description
7-0	DOUT7	R/W	E0h	Sets the output duty DOUT when DIN = 87.5% DOUT = 100%*DOUT1/255 0h = 0%, both outputs remain low, putting the driver in a brake state E0h = 87.5% (default) FFh = 100%

7.1.13 DOUT8 Register (Offset = Ch) [Reset = FFh]

DOUT8 is shown in Table 7-15.

Return to the Summary Table.

Table 7-15. DOUT8 Register Field Descriptions

Bit	Field	Type	Reset	Description
7-0	DOUT8	R/W	FFh	Sets the output duty DOUT when DIN = 100% DOUT = 100%*DOUT1/255 0h = 0%, both outputs remain low, putting the driver in a brake state FFh = 100% (default)

Copyright © 2026 Texas Instruments Incorporated

7.1.14 HALL_TIME_CONFIG Register (Offset = Dh) [Reset = 00h]

HALL_TIME_CONFIG is shown in Table 7-16.

Return to the Summary Table.

Table 7-16. HALL_TIME_CONFIG Register Field Descriptions

Bit	Field	Type	Reset	Description
7-0	HALL_OS_TIME	R/W	0h	Hall lead/lag time offset. t_{HALL_OS} = HALL_OS_TIME*10.24µs 00h = 0 01h = 10.24µs 02h = 20.48µs FFh = 2.6ms

7.1.15 COMMUTATION_CONFIG0 Register (Offset = Eh) [Reset = 00h]

COMMUTATION_CONFIG0 is shown in Table 7-17.

Return to the Summary Table.

Table 7-17. COMMUTATION_CONFIG0 Register Field Descriptions

Bit	Field	Type	Reset	Description
7-6	FG_MULTIPLIER	R/W	0h	This factor multiplies FG output frequency to keep speed feedback frequency the same when motor pole count changes. 0h = 1/2x 1h = 2/3x 2h = 1x 3h = 2x
5	FG_HALL_RAW_EN	R/W	0h	Enables raw hall signal from the hall sensor to drive the FG/RD pin. 0h = Hall offset signal drives FG/RD pin, based on FG_MULTIPLIER factor 1h = Hall latch sensor output drives FG/RD pin. FG_MULTIPLIER factor is not applied to the hall signal.
4-3	COMMUTATION_MODE	R/W	0h	Selects commutation mode for output PWM waveshape. 0h = Square commutation 1h = Soft commutation
2-0	PWM_MODE	R/W	0h	Selects output behavior during OFF times for PWM, current limiting, and demagnetization 0h = Hybrid mode for PWM, current limiting, and demagnetization 1h = Hybrid mode for PWM and current limiting; Asynchronous mode for demagnetization 2h = Asynchronous mode for PWM and current limiting; Hybrid mode for demagnetization 3h = Synchronous mode for PWM and current limiting; Hybrid mode for demagnetization 4h = Synchronous mode for PWM, current limiting, and demagnetization 5h = Synchronous mode for PWM and current limiting; Asynchronous mode for demagnetization 6h = Asynchronous mode for PWM and current limiting; Synchronous mode for demagnetization 7h = Asynchronous mode for PWM, current limiting, and demagnetization

Copyright © 2026 Texas Instruments Incorporated

7.1.16 COMMUTATION_CONFIG1 Register (Offset = Fh) [Reset = A0h]

COMMUTATION_CONFIG1 is shown in Table 7-18.

Return to the Summary Table.

Table 7-18. COMMUTATION_CONFIG1 Register Field Descriptions

Bit	Field	Type	Reset	Description
7	PWM_RAMP_EN	R/W	1h	Enables or disables PWM ramp function 0h = PWM ramp function disabled, input duty cycle applied instantly to DOUT 1h = PWM ramp function enabled, ramp rate set according to PWM_RAMP_SEL bits
6-5	PWM_RAMP_SEL	R/W	1h	The overall time from motor startup for DOUT to ramp from 0 to 100%. This also controls the ramp rate when there is a change is speed input. 0h = 10.7s (9.35%/s duty cycle ramp rate) 1h = 5.35s (18.70%/s duty cycle ramp rate) 2h = 2.67s (37.40%/s duty cycle ramp rate) 3h = 1.34s (74.8%/s duty cycle ramp rate)
4-0	SRISE	R/W	0h	Sets the rising ramp for soft commutation. Default is 0 degrees for square commutation. θ_{SRISE} = (SRISE*2.8 degrees)+2.8 degrees 00h = 2.8° 01h = 5.6° 1Fh = 90°

7.1.17 COMMUTATION_CONFIG2 Register (Offset = 10h) [Reset = 20h]

COMMUTATION_CONFIG2 is shown in Table 7-19.

Return to the Summary Table.

Table 7-19. COMMUTATION_CONFIG2 Register Field Descriptions

Bit	Field	Type	Reset	Description
7-6	RESERVED	R/W	0h	Reserved
5	PWM_DECEL_SEL	R/W	1h	Selects whether the ramp rate during deceleration is same as PWM_RAMP_SEL setting or half of that 0h = Deceleration duty cycle ramp rate set by PWM_RAMP_SEL 1h = Deceleration duty cycle ramp rate is half of PWM_RAMP_SEL
4-0	SFALL	R/W	0h	Sets the falling ramp for soft commutation. Default is 0 degrees for square commutation. θ_{SFALL} = (SFALL*2.8 degrees)+2.8 degrees 00h = 2.8° 01h = 5.6° 1Fh = 90°

Copyright © 2026 Texas Instruments Incorporated

7.1.18 COMMUTATION_CONFIG3 Register (Offset = 11h) [Reset = 46h]

COMMUTATION_CONFIG3 is shown in Table 7-20.

Return to the Summary Table.

Table 7-20. COMMUTATION_CONFIG3 Register Field Descriptions

Bit	Field	Type	Reset	Description
7-6	AUTO_DEMAG_EN	R/W	1h	Enables or disables automatic demagnetization time after PRESTART 0h = Sets t_{DEMAG} according to DEMAG bits 1h = Automatically determines duration of t_{DEMAG} time by detecting the current zero crossing 2h = Reserved 3h = Reserved
5-4	AUTO_DEMAG_STEP	R/W	0h	Step resolution for demagnetization time when auto-demag is enabled 0h = 2.56µs 1h = 5.12µs 2h = 10.24µs 3h = 20.48µs
3	RESERVED	R/W	0h	Reserved
2-1	HALL_REGEN_EN	R/W	3h	Enables or disables hall regeneration for commutation 0h = Disabled 1h = Reserved 2h = Reserved 3h = Enabled
0	RESERVED	R/W	0h	Reserved

Copyright © 2026 Texas Instruments Incorporated

7.1.19 PROTECTION_CONFIG Register (Offset = 12h) [Reset = 04h]

PROTECTION_CONFIG is shown in Table 7-21.

Return to the Summary Table.

Table 7-21. PROTECTION_CONFIG Register Field Descriptions

Bit	Field	Type	Reset	Description
7	SPEED_LOOP_EN	R/W	0h	Enables or disables Closed Loop speed control operation 0h = Open Loop operation with input command being target Duty Cycle 1h = Closed Loop operation with input command being target Speed
6	OVP_EN	R/W	0h	Enables or disables overvoltage protection 0h = Overvoltage protection disabled 1h = Overvoltage protection enabled
5-4	OVP_SEL	R/W	0h	Selects the overvoltage protection threshold 0h = 34.5V rising and 33.1V falling 1h = 22.6V rising and 21.1V falling 2h = 18.1V rising and 16.6V falling 3h = No OVP
3	OCP_RETRY_MODE	R/W	0h	Controls whether to retry indefinitely after OCP or stop after 3 consecutive retries 0h = retry indefinitely 1h = retry only 3 times consecutively
2-0	LRD_LONG_RETRY_SEL	R/W	4h	Selects multiplier to calculate $t_{lock_long_retry}$ from t_{LRD_START} 0h = x 2 1h = x 4 2h = x 8 3h = x 10 4h = x 12 5h = x 16 6h = x 24 7h = x 28

Copyright © 2026 Texas Instruments Incorporated

7.1.20 CLOSED_LOOP_CONFIG0 Register (Offset = 13h) [Reset = 00h]

CLOSED_LOOP_CONFIG0 is shown in Table 7-22.

Return to the Summary Table.

Table 7-22. CLOSED_LOOP_CONFIG0 Register Field Descriptions

Bit	Field	Type	Reset	Description
7-0	MAX_SPEED_LSB	R/W	0h	Sets the 8LSBs of the 12 bit value representing the maximum electrical speed in Hz (fMax) device must target, when operating at 100% duty in closed loop. Target electrical speed (Hz) = DOUT * MAX_SPEED

Copyright © 2026 Texas Instruments Incorporated

7.1.21 CLOSED_LOOP_CONFIG1 Register (Offset = 14h) [Reset = FFh]

CLOSED_LOOP_CONFIG1 is shown in Table 7-23.

Return to the Summary Table.

Table 7-23. CLOSED_LOOP_CONFIG1 Register Field Descriptions

Bit	Field	Type	Reset	Description
7-4	DOUT_MAX_MSN OR KI_RATIO	R/W	Fh	Open Loop: Sets the Most Significant Nibble (MSN) of DOUT_MAX, the maximum value DOUT is clamped to if DIN is between DIN0 and DINOFF. DOUT_MAX has a minimum clamp of 25%. Closed Loop: Sets the integral component (Ki) in the speed controller. 0h = Kp * 8 1h = Kp * 4 2h = Kp * 2 3h = Kp * 1 4h = Kp/2 5h = Kp/4 6h = Kp/8 7h = Kp/16
3-0	DOUT_MAX_LSN OR MAX_SPEED_MSN	R/W	Fh	Open Loop: Sets the Least Significant Nibble (LSN) of DOUT_MAX, the maximum value DOUT is clamped to if DIN is between DIN0 and DINOFF. DOUT_MAX has a minimum clamp of 25%. Closed Loop: Sets the 4 MSNs (Most significant Nibble) of the 12 bit value representing the maximum electrical speed in Hz (fMax) device must target, when operating at 100% duty in closed loop. Target electrical speed (Hz) = DOUT * MAX_SPEED

Copyright © 2026 Texas Instruments Incorporated

7.1.22 CLOSED_LOOP_CONFIG2 Register (Offset = 15h) [Reset = 02h]

CLOSED_LOOP_CONFIG2 is shown in Table 7-24.

Return to the Summary Table.

Table 7-24. CLOSED_LOOP_CONFIG2 Register Field Descriptions

Bit	Field	Type	Reset	Description
7-6	LRD_NRETRY_STARTUP	R/W	0h	Number of retries at start-up after wakeup from reset or sleep or standby, before enforcing a long retry period when rotor lock is detected. 0h = No retry attempt 1h = One retry attempt 2h = Two retry attempts 3h = Three retry attempts
5-4	LRD_NRETRY_RUN	R/W	0h	Number of retries during motor run before enforcing a long retry period when rotor lock is detected. 0h = No retry attempt 1h = One retry attempt 2h = Two retry attempts 3h = Three retry attempts
3	DEADTIME_SEL	R/W	0h	Selects deadtime duration of the full bridge 0h = Deadtime is 600ns 1h = Deadtime is 520ns
2-0	KP_RATIO	R/W	2h	Proportional component (Kp) in the speed controller as a factor of maximum electrical frequency (fMax) in closed loop speed control. 0h = 8/fMax 1h = 4/fMax 2h = 2/fMax 3h = 1/fMax 4h = 1/(2*fMax) 5h = 1/(4*fMax) 6h = 1/(8*fMax) 7h = 1/(16*fMax)

Copyright © 2026 Texas Instruments Incorporated

7.1.23 GENERAL_CONFIG0 Register (Offset = 16h) [Reset = 44h]

GENERAL_CONFIG0 is shown in Table 7-25.

Return to the Summary Table.

Table 7-25. GENERAL_CONFIG0 Register Field Descriptions

Bit	Field	Type	Reset	Description
7	OVP_BLANK_SEL	R/W	0h	Selects the duration of blanking to be applied in during peak duty cycle phase. 0h = Blanking active for 4ms in peak duty cycle 1h = Blanking active after 1ms in peak duty cycle
6	OVP_BLANK_EN	R/W	1h	Enables or disables the OVP Blanking time during the peak duty cycle phase 0h = OVP blanking in peak duty cycle phase according to OVP_BLANK_SEL in addition to SRISE and SFALL phases. 1h = No OVP blanking in peak duty cycle phase and blanking is only be active for SRISE and SFALL phases
5	OCP_DEGLITCH_SEL	R/W	0h	Selects deglitch time for OCP 0h = OCP deglitch time is 200ns 1h = OCP deglitch time is 500ns
4	ADJUST_DITHER_FOR_OSC_EN	R/W	0h	Adjusts the dither step duration to account for the oscillator frequency variation that occurs with each dither step. Dithering is in terms of PWM periods and hence this adjustment tries to equalize the actual time spent per step. Applicable only when DITHER_DWELL_SEL is set to 2h or 3h and ADAPTIVE_DWELL_EN is 0. 0h = Dither adjustment for oscillator frequency variation disabled 1h = Dither adjustment for oscillator frequency variation enabled
3-2	DITHER_DWELL_SEL	R/W	1h	Controls dwell time per step of dither frequency 0h = 1 PWM period 1h = 4 PWM periods 2h = 16 PWM periods 3h = 64 PWM periods
1	ADAPTIVE_DWELL_EN	R/W	0h	Enables speed based dwell time for dithering, relevant when DITHER_EN is 1h 0h = Adaptive dwell time disabled 1h = Adaptive dwell time enabled
0	DITHER_EN	R/W	0h	Enables dithering of internal oscillator and therefore output PWM 0h = Dithering is disabled 1h = Dithering is enabled

Copyright © 2026 Texas Instruments Incorporated

7.1.24 GENERAL_CONFIG1 Register (Offset = 17h) [Reset = 46h]

GENERAL_CONFIG1 is shown in Table 7-26.

Return to the Summary Table.

Table 7-26. GENERAL_CONFIG1 Register Field Descriptions

Bit	Field	Type	Reset	Description
7	HALL_INVERT	R/W	0h	This bit inverts the Hall offset signal to the commutation block. 0h = Non-inverted Hall latch signal 1h = Inverted Hall latch signal
6	HALL_TIME_MODE	R/W	1h	Selects whether the time component of Hall Offset is to be applied in leading or lagging direction 0h = The Hall offset signal lags the Hall latch output signal by t_{HALL_OS} 1h = The Hall offset signal leads the Hall latch output signal by t_{HALL_OS}
5-4	LRD_TIME_STARTUP	R/W	0h	Selects the locked rotor detection time t_{LRD_START} at start-up. Also used to calculate long retry time $t_{lock_long_retry}$ 0h = 325ms 1h = 440ms Ah = 524ms Bh = 1.05s
3-0	ILIMIT_SEL	R/W	6h	Selects the current limit threshold. Only values from 0h to 9h are valid. 0h = 0.32A 1h = 0.43A 2h = 0.53A 3h = 0.63A 4h = 0.73A 5h = 0.83A 6h = 0.94A 7h = 1.03A 8h = 1.12A 9h = 1.21A

Copyright © 2026 Texas Instruments Incorporated

7.1.25 GENERAL_CONFIG2 Register (Offset = 18h) [Reset = 81h]

GENERAL_CONFIG2 is shown in Table 7-27.

Return to the Summary Table.

Table 7-27. GENERAL_CONFIG2 Register Field Descriptions

Bit	Field	Type	Reset	Description
7	VM_CLAMP_DIS	R/W	1h	Disables or enables the VM Clamp feature 0h = VM clamp enabled 1h = VM clamp disabled
6	HALL_ANGLE_MODE	R/W	0h	Selects whether the angle component of Hall Offset is to be applied in leading or lagging direction 0h = The Hall offset signal lags the Hall latch output signal by $\theta_{HALL_OS_ANGLE}$ 1h = The Hall offset signal leads the Hall latch output signal by $\theta_{HALL_OS_ANGLE}$
5-1	HALL_OS_ANGLE	R/W	0h	The angle component of Hall Offset in degrees 0h = 0° 1h = 1.4° 1Fh = 43.6°
0	PRESTART_RAMP_EN	R/W	1h	Enables or disables prestart PWM ramp function 0h = Prestart ramp function disabled, input duty cycle applied instantly to DOUT 1h = Prestart ramp function enabled, ramp rate set according to PWM_RAMP_SEL bits

Copyright © 2026 Texas Instruments Incorporated

7.1.26 GENERAL_CONFIG3 Register (Offset = 19h) [Reset = 24h]

GENERAL_CONFIG3 is shown in Table 7-28.

Return to the Summary Table.

Table 7-28. GENERAL_CONFIG3 Register Field Descriptions

Bit	Field	Type	Reset	Description
7-4	SILENCE_ANGLE	R/W	2h	Sets the angle for PWM silence at beginning of commutation in electrical degrees 0h = 0.0° 1h = 1.4° 2h = 2.8° 3h = 4.2° 4h = 5.6° 5h = 7.0° 6h = 8.4° 7h = 9.8° 8h = 11.3° 9h = 12.7° 10h = 14.1° 11h = 15.5° 12h = 16.9° 13h = 18.3° 14h = 19.7° 15h = 21.1°
3-2	POLE_PAIR	R/W	1h	Indicates the number of pole pairs in the rotor 0h = One pole pair 1h = Two pole pairs 2h = Three pole pairs 3h = Four pole pairs
1	LRD_RETRY_DIS	R/W	0h	Disables retries after 5 consecutive attempts when locked rotor is detected 0h = Infinite number of retries 1h = Retries limited to 4
0	PWRUP_PWMDC_MASK	R/W	0h	Enables or disables masking of input speed command at the PWM/DC pin for 1s during initial power up from reset condition 0h = No masking at PWM/DC pin input 1h = Masks PWM/DC pin input for 1s during initial power up

Copyright © 2026 Texas Instruments Incorporated

7.1.27 GENERAL_CONFIG4 Register (Offset = 1Ah) [Reset = 08h]

GENERAL_CONFIG4 is shown in Table 7-29.

Return to the Summary Table.

Table 7-29. GENERAL_CONFIG4 Register Field Descriptions

Bit	Field	Type	Reset	Description
7-1	DEMAG_TIME	R/W	4h	Sets the demagnetization time towards end of commutation in µs 0h = 0µs 1h = 40.96µs 2h = 81.92µs 7Fh = 5.2ms
0	SILENCE_MODE	R/W	0h	Selects the state of output FETs during silence phase 0h = All FETs in HiZ during silence phase 1h = Asynchronous mode in SILENCE phase

Copyright © 2026 Texas Instruments Incorporated

7.1.28 USR_OTP_CRC Register (Offset = 1Bh) [Reset = 00h]

USR_OTP_CRC is shown in Table 7-30.

Return to the Summary Table.

Table 7-30. USR_OTP_CRC Register Field Descriptions

Bit	Field	Type	Reset	Description
7-0	USR_OTP_CRC	R/W	0h	CRC value calculated over USR_OTP registers

7.2 USR_TM Registers

Table 7-31 lists the memory-mapped registers for the USR_TM registers. All register offset addresses not listed in Table 7-31 should be considered as reserved locations and the register contents should not be modified.

Table 7-31. USR_TM Registers

Offset	Acronym	Register Name	Section
20h	TEST_FAULT	Register to test for Fault	Section 7.2.1
21h	TEST_DIN	Input Duty Cycle Control	Section 7.2.2
22h	TEST_FAULT_STATUS	Register to indicate Fault type	Section 7.2.3
23h	TEST_SPEED_MSB	Speed Feedback	Section 7.2.4
24h	TEST_SPEED	Speed Feedback	Section 7.2.5
25h	USR_OTP_CFG	Register to configure USR_OTP Programming	Section 7.2.6
26h	USR_OTP_PRG_UNLOCK	Unlock access to program or verify USR_OTP	Section 7.2.7

Complex bit access types are encoded to fit into small table cells. Table 7-32 shows the codes that are used for access types in this section.

Table 7-32. USR_TM Access Type Codes

Access Type	Code	Description
Read Type		
R	R	Read
Write Type		
W	W	Write
W0C	W 0C	Write 0 to clear
Reset or Default Value		
-n		Value after reset or the default value

Copyright © 2026 Texas Instruments Incorporated

7.2.1 TEST_FAULT Register (Offset = 20h) [Reset = 00h]

TEST_FAULT is shown in Table 7-33.

Return to the Summary Table.

Table 7-33. TEST_FAULT Register Field Descriptions

Bit	Field	Type	Reset	Description
7	FAULT	R	0h	Reading this bit indicates that the device is in a fault mode (OCP, OVP, UVLO, Rotor Lock, TSD). Current limiting operation does not report on this bit. 0h = Active mode 1h = Fault mode
6-0	RESERVED	R	0h	Reserved

7.2.2 TEST_DIN Register (Offset = 21h) [Reset = 01h]

TEST_DIN is shown in Table 7-34.

Return to the Summary Table.

Table 7-34. TEST_DIN Register Field Descriptions

Bit	Field	Type	Reset	Description
7-0	DIN_CNTRL	R/W	1h	Writing to this register sets the input duty cycle DIN to control speed while the PWM pin is not available in I2C. DIN = DIN_CTRL/255 0h = 0% A0h = 62.5% FFh = 100%

Copyright © 2026 Texas Instruments Incorporated

7.2.3 TEST_FAULT_STATUS Register (Offset = 22h) [Reset = 00h]

TEST_FAULT_STATUS is shown in Table 7-35.

Return to the Summary Table.

Table 7-35. TEST_FAULT_STATUS Register Field Descriptions

Bit	Field	Type	Reset	Description
7-6	RESERVED	R	0h	Reserved
5	RESERVED	R/W0C	0h	Reserved
4	TSD	R/W0C	0h	Reading this bit indicates that the device is in temperature shutdown (TSD) protection. 0h = Normal operation 1h = TSD fault
3	UVLO	R	0h	Reading this bit indicates that the device is in undervoltage (UVLO). 0h = Normal operation 1h = UVLO fault
2	OVP	R/W0C	0h	Reading this bit indicates that the device is in overvoltage protection (OVP). 0h = Normal operation 1h = OVP fault
1	LRP	R	0h	Reading this bit indicates that the device is in locked rotor protection (LRP). 0h = Normal operation 1h = LRP fault
0	OCP	R/W0C	0h	Reading this bit indicates that the device in overcurrent protection. 0h = Normal operation 1h = OCP fault

Copyright © 2026 Texas Instruments Incorporated

7.2.4 TEST_SPEED_MSB Register (Offset = 23h) [Reset = 00h]

TEST_SPEED_MSB is shown in Table 7-36.

Return to the Summary Table.

Table 7-36. TEST_SPEED_MSB Register Field Descriptions

Bit	Field	Type	Reset	Description
7-0	ELECTRICAL_PERIOD_MSB	R	0h	Reading this register provides the period of the motor's electrical cycle. This helps provide speed feedback during test mode since the FG pin is not available. Formula for Electrical Half Cycle Duration is 10.24us * ((ELECTRICAL_PERIOD_MSB << 8) + (ELECTRICAL_PERIOD)) Total Electrical Period is twice the value calculated above

Copyright © 2026 Texas Instruments Incorporated

7.2.5 TEST_SPEED Register (Offset = 24h) [Reset = 00h]

TEST_SPEED is shown in Table 7-37.

Return to the Summary Table.

Table 7-37. TEST_SPEED Register Field Descriptions

Bit	Field	Type	Reset	Description
7-0	ELECTRICAL_PERIOD_LSB	R	0h	Reading this register provides the period of the motor's electrical cycle. This helps provide speed feedback during test mode since the FG pin is not available. Formula in ELECTRICAL_PERIOD_MSB bit field description.

Copyright © 2026 Texas Instruments Incorporated

7.2.6 USR_OTP_CFG Register (Offset = 25h) [Reset = 00h]

USR_OTP_CFG is shown in Table 7-38.

Return to the Summary Table.

Table 7-38. USR_OTP_CFG Register Field Descriptions

Bit	Field	Type	Reset	Description
7	USR_OTP_CRC_ERR	R	0h	Status of USR_OTP_CRC check 0h = No CRC error 1h = CRC error
6	DEVICE_OTP_CRC_ERR	R	0h	Status of DEVICE OTP CRC computed for DEVICE OTP contents 0h = No CRC error 1h = CRC error
5	RESERVED	R/W	0h	Reserved
4-3	USR_OTP_PAGE_USED	R	0h	Indicates the OTP on which the latest load operation was performed on. These bits need to be used in combination with information from CRC and CRC error flags to arrive at which OTP is programmed. 0h = Invalid combination since device attempts to read at least one OTP at power up. 1h = Latest load attempt is from USR_OTP1. Use CRC value in combination to determine whether USR_OTP1 is programmed. 2h = Latest load is from USR_OTP2. 3h = Invalid combination which is not expected.
2	USR_OTP_PAGE_SEL	R/W	0h	This bit indicates whether first OTP page is targeted for commanded operation, or second OTP page is targeted. 0h = OTP page 1 1h = OTP page 2
1	USR_OTP_PROG_VERIFY	R/W	0h	Reserved
0	USR_OTP_PROG_ALL	R/W	0h	Write 1h to this bit to program the USR_OTP page according to USR_OTP_PAGE_SEL

Copyright © 2026 Texas Instruments Incorporated

7.2.7 USR_OTP_PRG_UNLOCK Register (Offset = 26h) [Reset = 00h]

USR_OTP_PRG_UNLOCK is shown in Table 7-39.

Return to the Summary Table.

Table 7-39. USR_OTP_PRG_UNLOCK Register Field Descriptions

Bit	Field	Type	Reset	Description
7-3	RESERVED	R	0h	Reserved
2-0	USR_OTP_PROG_UNLOCK	R	0h	User needs to write a sequence of 2h,1h,4h to this bits in successive write-frames, to unlock access to USR_OTP programming or program-verify operations

Copyright © 2026 Texas Instruments Incorporated

8 Application and Implementation

Note

Information in the following applications sections is not part of the TI component specification, and TI does not warrant its accuracy or completeness. TI's customers are responsible for determining suitability of components for their purposes, as well as validating and testing their design implementation to confirm system functionality.

8.1 Application Information

The MC121 can be used to drive Single Phase Brushless-DC motors. The following design procedure can be used to interface the MC121.

8.1.1 External Components

This section presents recommended external components for the MC121 in a fan application.

Supply Components

Figure 8-1 shows typical components used on the supply connection in a fan module. The D_1 diode in series with the power supply protects the MC121 in case of accidental reverse supply connection. A power supply decoupling capacitor is required for proper functioning of MC121 and a minimum value of 0.1 uF is recommended. The optional bulk capacitor, C_{BULK}, placed near the VM pin helps to stabilize the V_{VM} supply voltage during motor operation. A ceramic capacitor with low electrical series resistance (ESR) and a voltage rating twice the supply voltage is recommended to provide margin during transients. A capacitance value between 1µF and 10µF based on application is recommended.

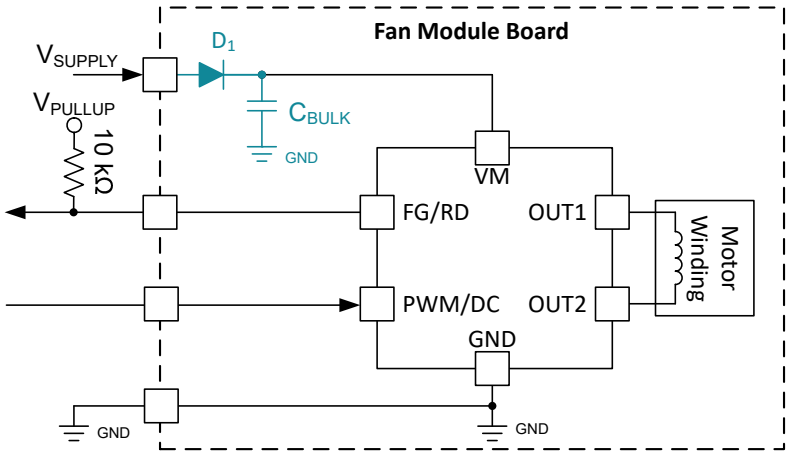

Figure 8-1. Typical Fan Module External Components

Motor systems requiring large motor currents and high rotor inertia can experience high currents flowing into the VM node from the H-bridge due to stored inductor energy during commutation. The additional charge in the C_{BULK} capacitor increases the V_{VM} supply voltage. Although the MC121 has overvoltage protection, adding protective clamp components on the supply rail can reduce the magnitude of voltage spikes. These components can also help protect against ESD strikes on the supply.

Figure 8-2 shows an example using a Zener diode or TVS diode (D_2) on the VM node. The diode clamping voltage needs to be higher than the fan system maximum operating voltage and lower than the MC121 maximum operating voltage from the Recommended Operating Conditions table. An RC snubber on the supply also can protect the driver against voltage spikes and ESD (Figure 8-3). TI recommends using 1µF for $C_{SNUBBER}$ and 2Ω for $R_{SNUBBER}$. Alternatively, an electrolytic capacitor can be used in parallel with C_{BULK}.

Copyright © 2026 Texas Instruments Incorporated

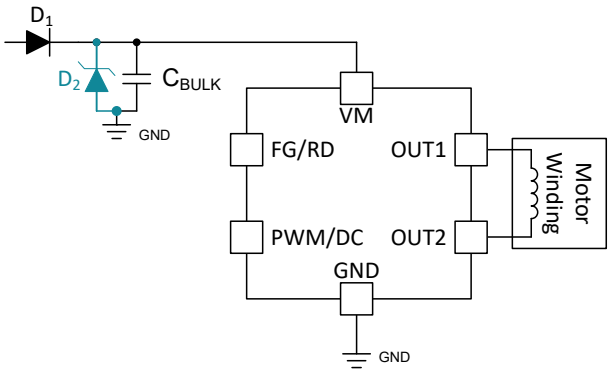

Figure 8-2. Clamping Diode on VM

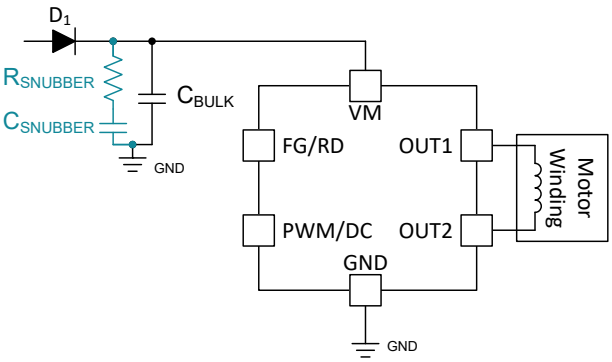

Figure 8-3. Snubber on VM

PWM and FG/RD Pin Components

Figure 8-1 shows the minimal external components needed for fan module PWM control and speed/fault feedback. The FG/RD pin is an open drain output and requires an external pull-up resistor to provide an output signal at the proper voltage. The pull-up resistor value must be chosen to limit the current into the FG/RD pin to less than 5 mA when the open drain output asserts low. Adding resistors inline with the PWM input and FG/RD output can help protect the driver from ESD strikes on the connector wires, as shown in Figure 8-4. Clamping or TVS diodes on the FG/RD and PWM signals provides additional protection against ESD strikes as shown in Figure 8-5.

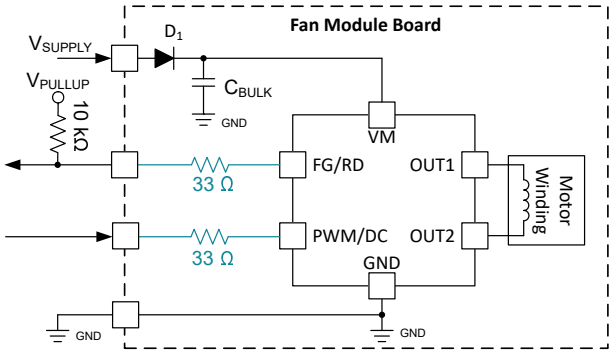

Figure 8-4. Resistors on PWM and FG/RD

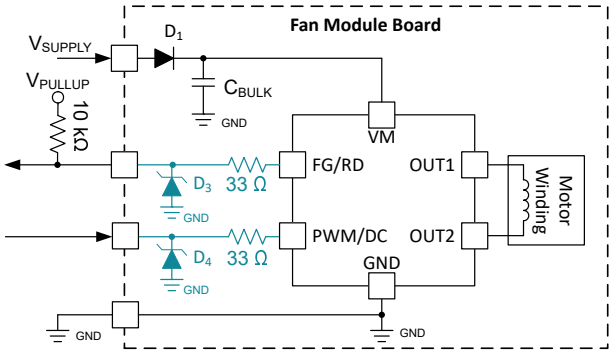

Figure 8-5. Resistors and zener diodes on PWM and FG/RD

Some single phase fan modules require an open-collector interface for the FG/RD and PWM pins. Figure 8-6 and Figure 8-7 show examples for connecting components inside and outside of the fan module for the open-collector interface.

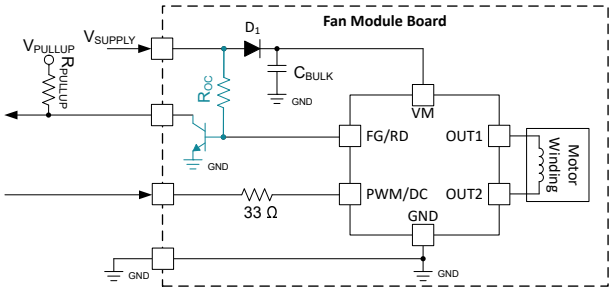

Figure 8-6. Open Collector on FG/RD

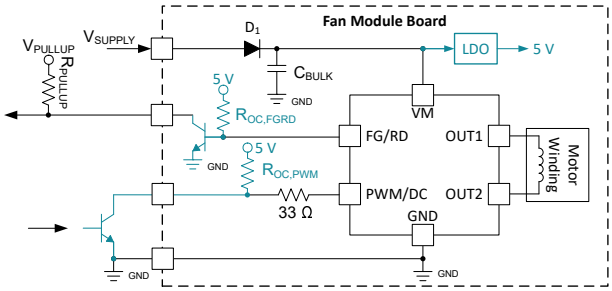

Figure 8-7. Open Collector on PWM and FG/RD

OTP and Test Mode Programming

The MC121 supports an I²C interface on the FG/RD and PWM pins in OTP (one-time programmable) mode. The OTP mode allows the designer to test various device settings and program the device OTP in production. Figure 8-8 shows an example of the external component connections for the MC121 for device programming. Additional details on OTP and test mode programming are in Section 6.4.4.

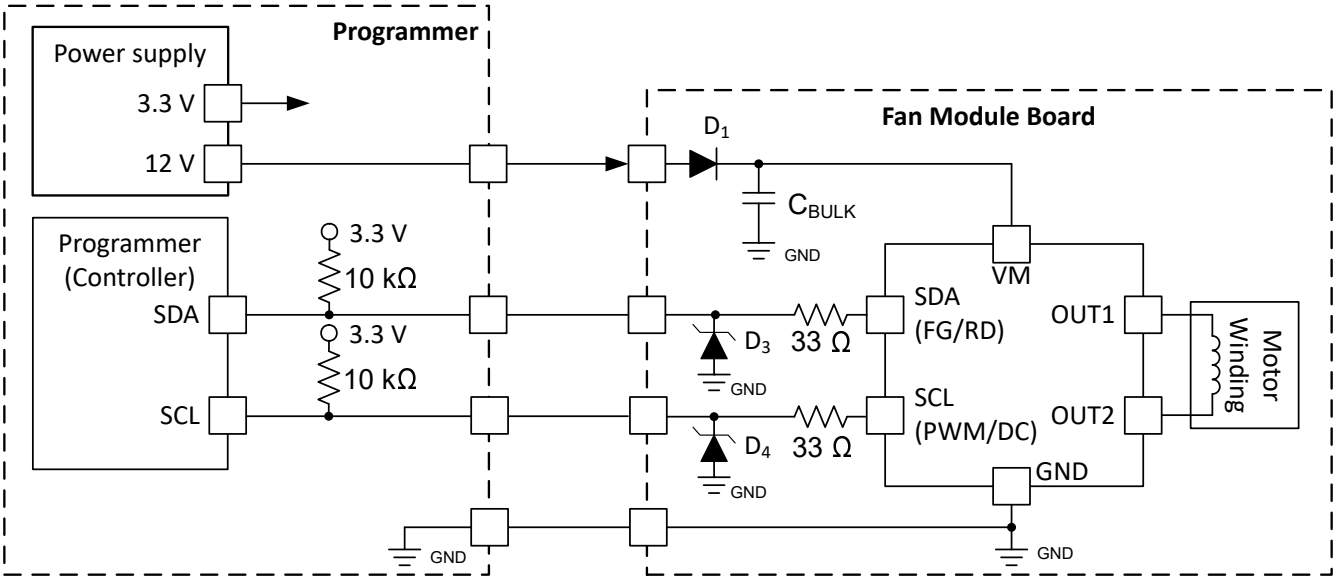

Figure 8-8. OTP Memory Programmer and Fan Module

8.2 Typical Application

8.2.1 Design Requirements

Single Phase Brushless-DC Motor Control With Current Limit

In this application, the MC121 is used to drive a single phase brushless-DC motor with current limit up to 100% duty cycle. The following design procedure can be used to configure the MC121 in current limit mode.

Table 8-1 lists the example input parameters for the system design.

Table 8-1. Design Parameters

PARAMETER	VALUE
Supply voltage	12V
Motor peak current	1.2A
Speed Input type	PWM (0% to 100% duty), 50Hz
FG/RD pin function	Assert high when rotor lock fault
Commutation shape	Square

8.2.2 Detailed Design Procedure

Motor Voltage

Single phase Brushless-DC motors are typically rated for a certain voltage (for example 12V or 24V). Operating a motor at a higher voltage corresponds to a lower drive current to obtain the same motor power. A higher operating voltage also corresponds to a higher obtainable rpm. The MC121 allows for a range of possible operating voltages from 3.2V to 35V.

Copyright © 2026 Texas Instruments Incorporated

Device configuration settings

Default OTP configuration for MC121 is listed in Table 7-1 . Default values are chosen for reliable motor startup and closed loop operation. Refer toMC121 tuning and programming guide which provides step by step procedure to tune a single-phase BLDC motor in both open loop and closed loop configurations, and explore features in the device.

Table 8-2. Recommended OTP configuration Values (changes from default)

Register Values Name	Recommended Value
PWM_IN_RANGE	1h
FGRD_INVERT	1h
FGRD_MODE	1h
PWM_MODE	7h
SILENCE_ANGLE	4h
ILIMIT_SEL	9h

Once the device OTP is programmed with the desired configuration, device can be operated stand-alone and I^2C serial interface is not required anymore. Speed can be commanded using PWM/DC pin and locked rotor faults can be monitored using the FG/RD pin.

Power Dissipation and Junction Temperature Losses

To calculate the junction temperature of the MC121 from power losses, use Equation 1. Note that the thermal resistance θ_{JA} depends on PCB configurations such as the ambient temperature, numbers of PCB layers, copper thickness on top and bottom layers, and the PCB area.

$$T_J[°C] = P_{loss}[W] \times \theta_{JA}\left[\frac{°C}{W}\right] + T_A[°C] \quad (1)$$

8.2.3 Application Curves

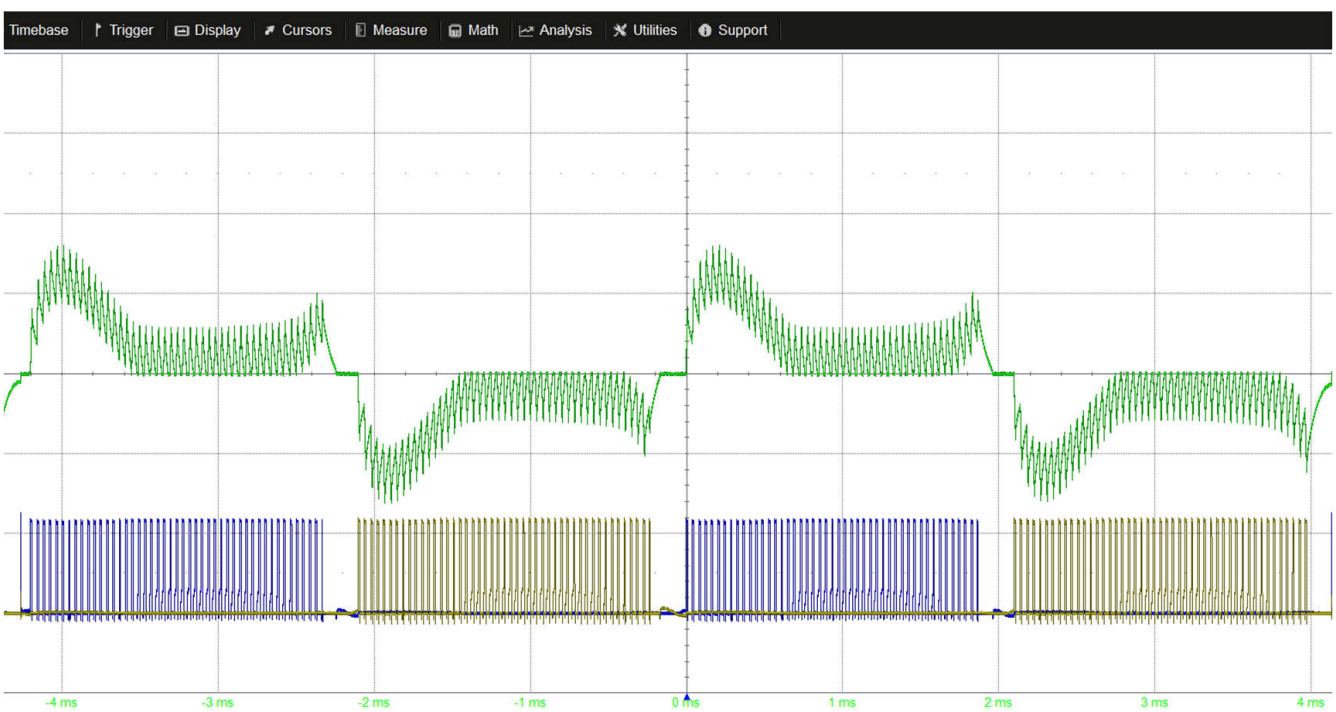

Figure 8-9. OUTx voltage and phase current at PWM input = 25%

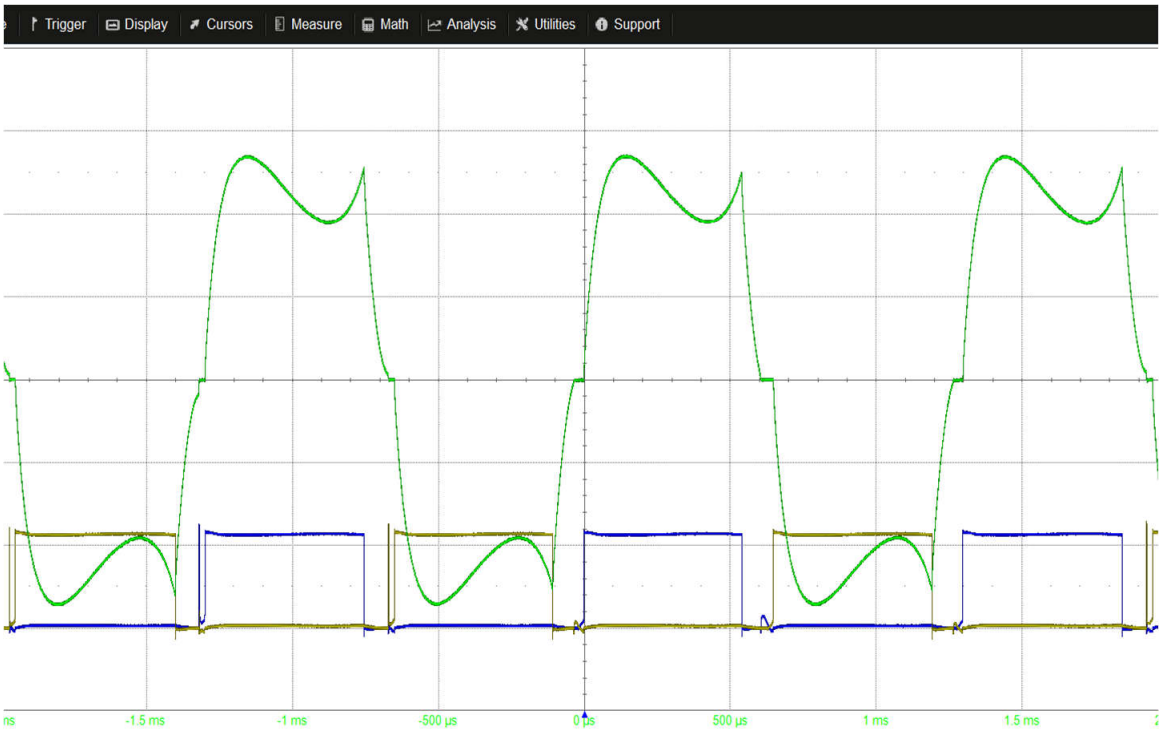

Figure 8-10. OUTx voltage and phase current at PWM input = 100%

8.3 Power Supply Recommendations

8.3.1 Bulk Capacitance

Having an appropriate local bulk capacitance is an important factor in motor drive system design. Having more bulk capacitance is generally beneficial, while the disadvantages are increased cost and physical size.

The amount of local capacitance needed depends on a variety of factors, including:

- The highest current required by the motor system
- The capacitance and current capability of the power supply
- The amount of parasitic inductance between the power supply and motor system
- The acceptable voltage ripple
- The motor stop or braking method

The inductance between the power supply and the motor drive system limits the rate current can change from the power supply. If the local bulk capacitance is too small, the system responds to excessive current demands or dumps from the motor with a change in voltage. When adequate bulk capacitance is used, the motor voltage remains stable and high current can be quickly supplied.

The datasheet generally provides a recommended value, but system-level testing is required to determine the appropriate sized bulk capacitor.

Copyright © 2026 Texas Instruments Incorporated

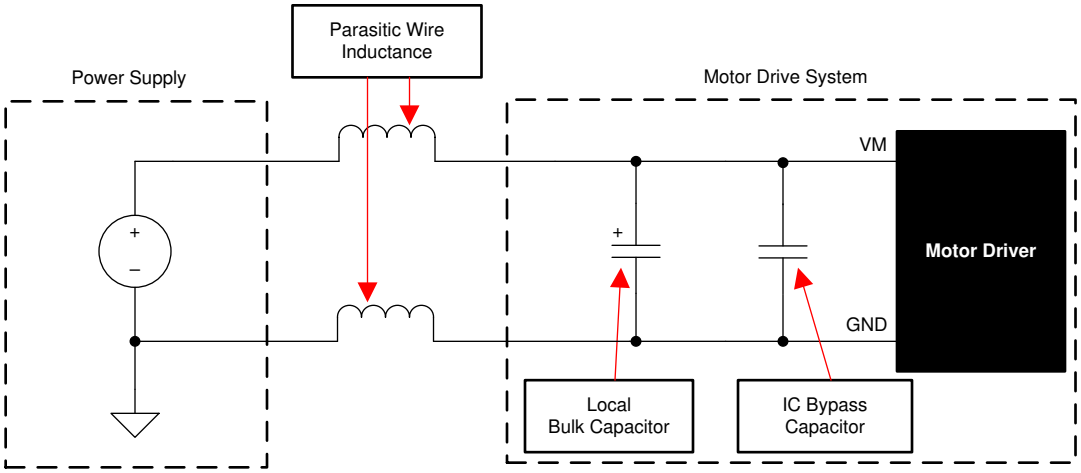

Figure 8-11. Example Setup of Motor Drive System With External Power Supply

The voltage rating for bulk capacitors can be higher than the operating voltage, to provide margin for cases when the motor transfers energy to the supply.

8.4 Layout

8.4.1 Layout Guidelines

The bulk capacitor can be placed to minimize the distance of the high-current path through the motor driver device. The connecting metal trace widths are as wide as possible, and numerous vias are used when connecting PCB layers. These practices minimize parasitic inductance and allow the bulk capacitor to deliver high current.

The device bypass capacitors are ceramic, and placed closely to device pins.

The high-current device outputs are wide metal traces.

To reduce noise coupling and EMI from large transient currents into small-current signal paths, grounding are partitioned between PGND and AGND. TI recommends connecting all non-power stage circuitry (including the thermal pad) to AGND to reduce parasitic effects and improve power dissipation from the device.

The device thermal pad are soldered to the PCB top-layer ground plane. Multiple vias are used to connect to a large bottom-layer ground plane. The use of large metal planes and multiple vias helps dissipate the $I^2 \times R_{DS(on)}$ heat that is generated in the device.

To improve thermal performance, maximize the ground area that is connected to the thermal pad ground across all possible layers of the PCB. Using thick copper pours can lower the junction-to-air thermal resistance and improve thermal dissipation from the die surface.

Figure 8-12 shows a layout example for the MC121 in DEZ package. For proper motor commutation, the MC121 must be placed between two of the stator poles with the Hall element directly beneath the rotor magnet. Figure 8-13 shows the placement example for DYM package

8.4.2 Layout Example

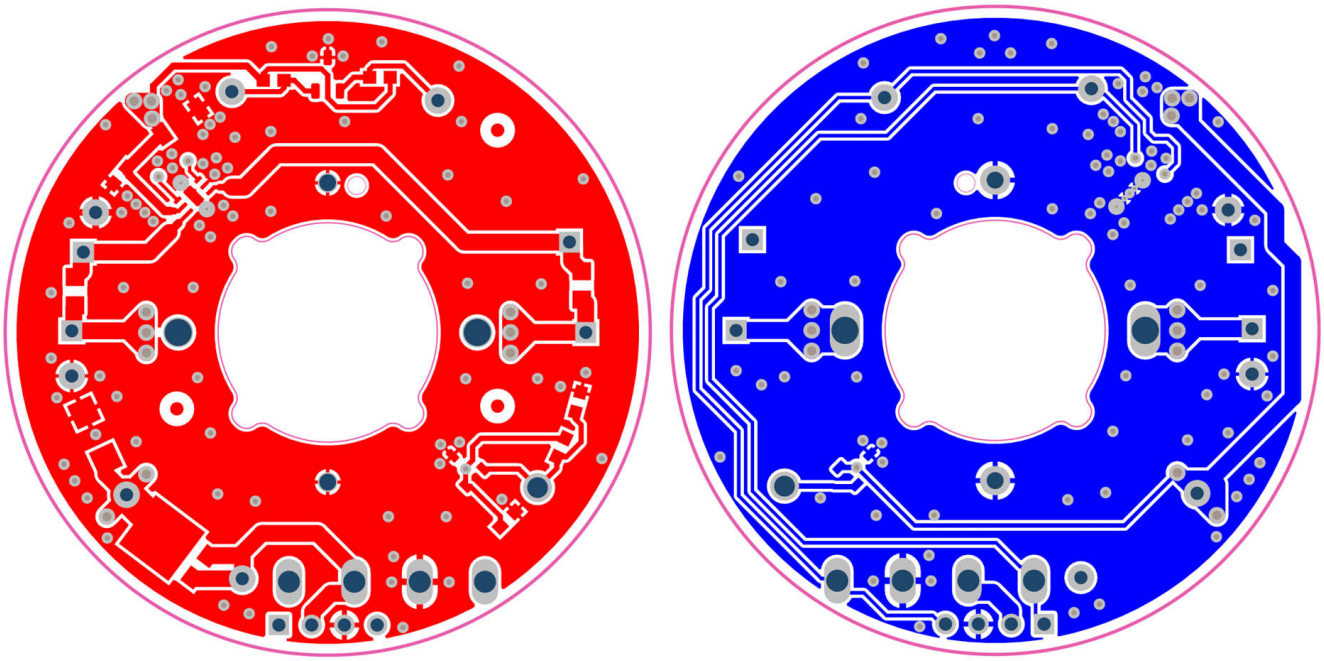

Figure 8-12. Recommended Example Layout for DEZ package

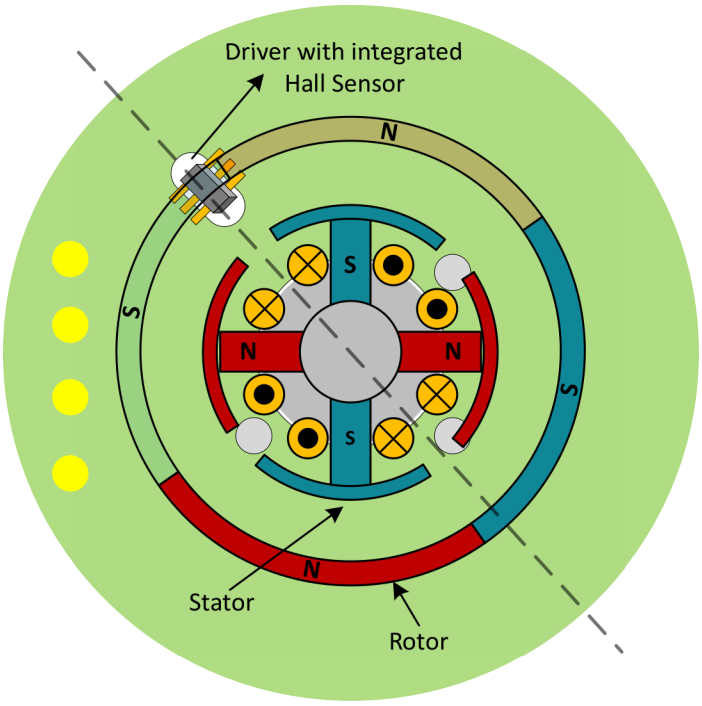

Figure 8-13. Recommended Example Placement for DYM package

Copyright © 2026 Texas Instruments Incorporated

8.5 Hall Element Position

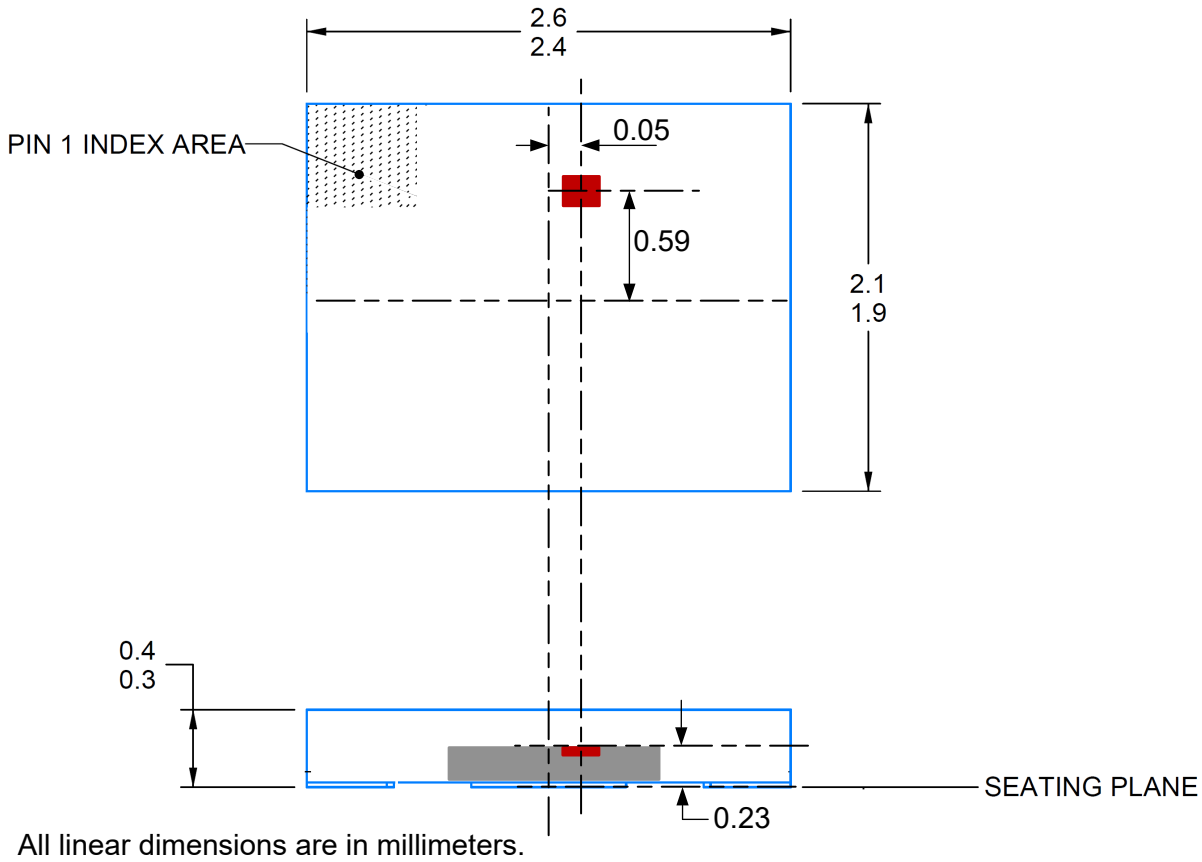

Figure 8-14. Hall Element position for DEZ package

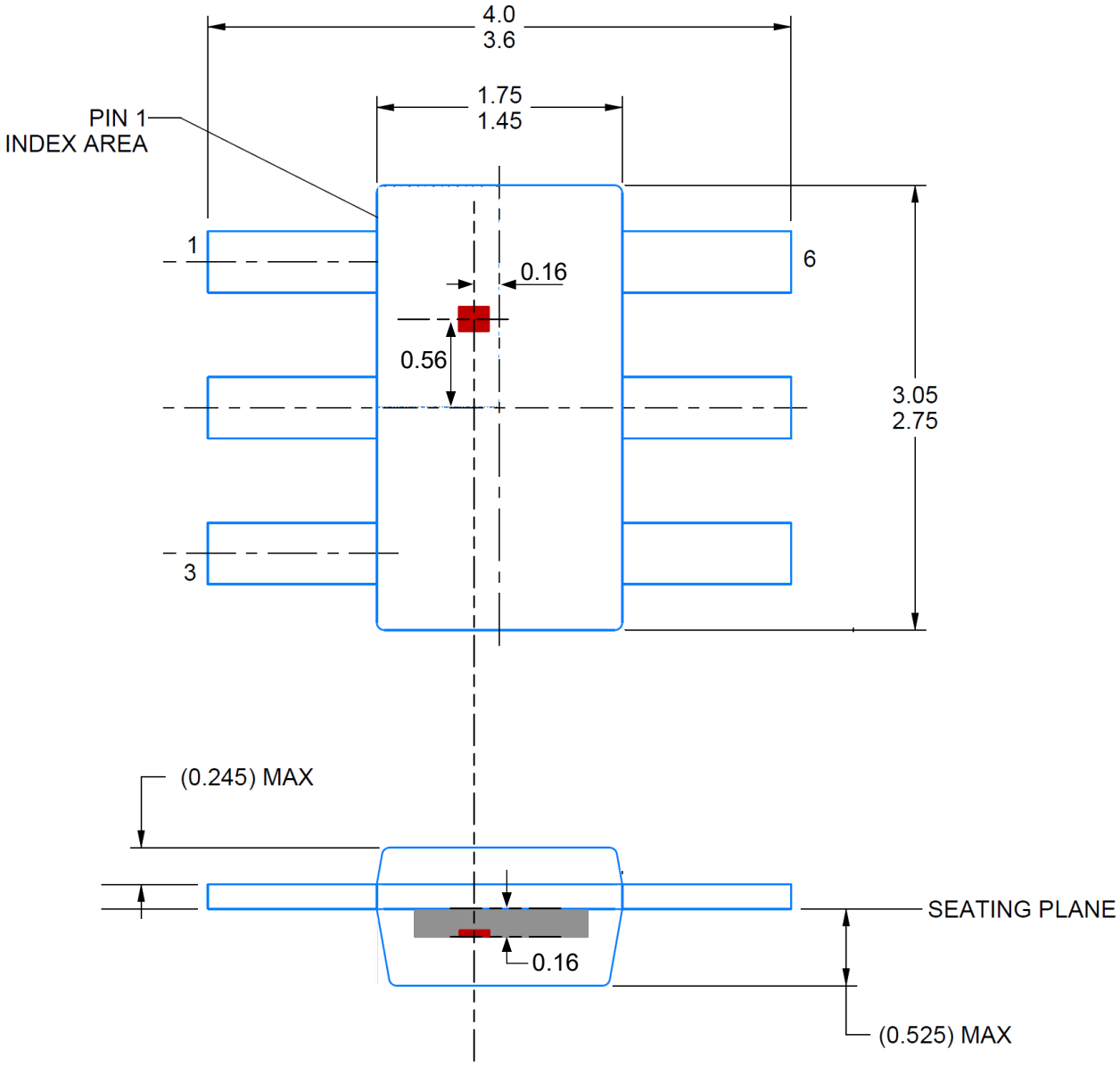

All linear dimensions are in millimeters.

Figure 8-15. Hall Element position for DYM package

Copyright © 2026 Texas Instruments Incorporated

9 Device and Documentation Support

TI offers an extensive line of development tools. Tools and software to evaluate the performance of the device, generate code, and develop designs are listed below.

9.1 Device Support

9.2 Documentation Support

9.2.1 Related Documentation

9.3 Receiving Notification of Documentation Updates

To receive notification of documentation updates, navigate to the device product folder on ti.com. Click on *Notifications* to register and receive a weekly digest of any product information that has changed. For change details, review the revision history included in any revised document.

9.4 Support Resources

TI E2E™ support forums are an engineer's go-to source for fast, verified answers and design help — straight from the experts. Search existing answers or ask your own question to get the quick design help you need.

Linked content is provided "AS IS" by the respective contributors. They do not constitute TI specifications and do not necessarily reflect TI's views; see TI's Terms of Use.

9.5 Trademarks

TI E2E™ is a trademark of Texas Instruments.
All trademarks are the property of their respective owners.

9.6 Electrostatic Discharge Caution

This integrated circuit can be damaged by ESD. Texas Instruments recommends that all integrated circuits be handled with appropriate precautions. Failure to observe proper handling and installation procedures can cause damage.

ESD damage can range from subtle performance degradation to complete device failure. Precision integrated circuits may be more susceptible to damage because very small parametric changes could cause the device not to meet its published specifications.

9.7 Glossary

TI Glossary	This glossary lists and explains terms, acronyms, and definitions.

10 Revision History

NOTE: Page numbers for previous revisions may differ from page numbers in the current version.

Changes from Revision * (December 2025) to Revision A (March 2025)	Page
• Updated device status from Advanced Information to Production Data	1

11 Mechanical, Packaging, and Orderable Information

The following pages include mechanical, packaging, and orderable information. This information is the most current data available for the designated devices. This data is subject to change without notice and revision of this document. For browser-based versions of this data sheet, refer to the left-hand navigation.

PACKAGING INFORMATION

Orderable part number	Status (1)	Material type (2)	Package | Pins	Package qty | Carrier	RoHS (3)	Lead finish/ Ball material (4)	MSL rating/ Peak reflow (5)	Op temp (°C)	Part marking (6)
MC121DEZR	Active	Production	X2SON (DEZ) | 6	5000 | LARGE T&R	Yes	Call TI	Level-1-260C-UNLIM	-40 to 125	121

(1) **Status:** For more details on status, see our product life cycle.

(2) **Material type:** When designated, preproduction parts are prototypes/experimental devices, and are not yet approved or released for full production. Testing and final process, including without limitation quality assurance, reliability performance testing, and/or process qualification, may not yet be complete, and this item is subject to further changes or possible discontinuation. If available for ordering, purchases will be subject to an additional waiver at checkout, and are intended for early internal evaluation purposes only. These items are sold without warranties of any kind.

(3) **RoHS values:** Yes, No, RoHS Exempt. See the TI RoHS Statement for additional information and value definition.

(4) **Lead finish/Ball material:** Parts may have multiple material finish options. Finish options are separated by a vertical ruled line. Lead finish/Ball material values may wrap to two lines if the finish value exceeds the maximum column width.

(5) **MSL rating/Peak reflow:** The moisture sensitivity level ratings and peak solder (reflow) temperatures. In the event that a part has multiple moisture sensitivity ratings, only the lowest level per JEDEC standards is shown. Refer to the shipping label for the actual reflow temperature that will be used to mount the part to the printed circuit board.

(6) **Part marking:** There may be an additional marking, which relates to the logo, the lot trace code information, or the environmental category of the part.

Multiple part markings will be inside parentheses. Only one part marking contained in parentheses and separated by a "~" will appear on a part. If a line is indented then it is a continuation of the previous line and the two combined represent the entire part marking for that device.

Important Information and Disclaimer: The information provided on this page represents TI's knowledge and belief as of the date that it is provided. TI bases its knowledge and belief on information provided by third parties, and makes no representation or warranty as to the accuracy of such information. Efforts are underway to better integrate information from third parties. TI has taken and continues to take reasonable steps to provide representative and accurate information but may not have conducted destructive testing or chemical analysis on incoming materials and chemicals. TI and TI suppliers consider certain information to be proprietary, and thus CAS numbers and other limited information may not be available for release.

In no event shall TI's liability arising out of such information exceed the total purchase price of the TI part(s) at issue in this document sold by TI to Customer on an annual basis.

OTHER QUALIFIED VERSIONS OF MC121 :

- Automotive : MC121-Q1

NOTE: Qualified Version Definitions:

- Automotive - Q100 devices qualified for high-reliability automotive applications targeting zero defects

PACKAGE OUTLINE

DEZ0006A

X2SON - 0.4 mm max height

PLASTIC SMALL OUTLINE - NO LEAD

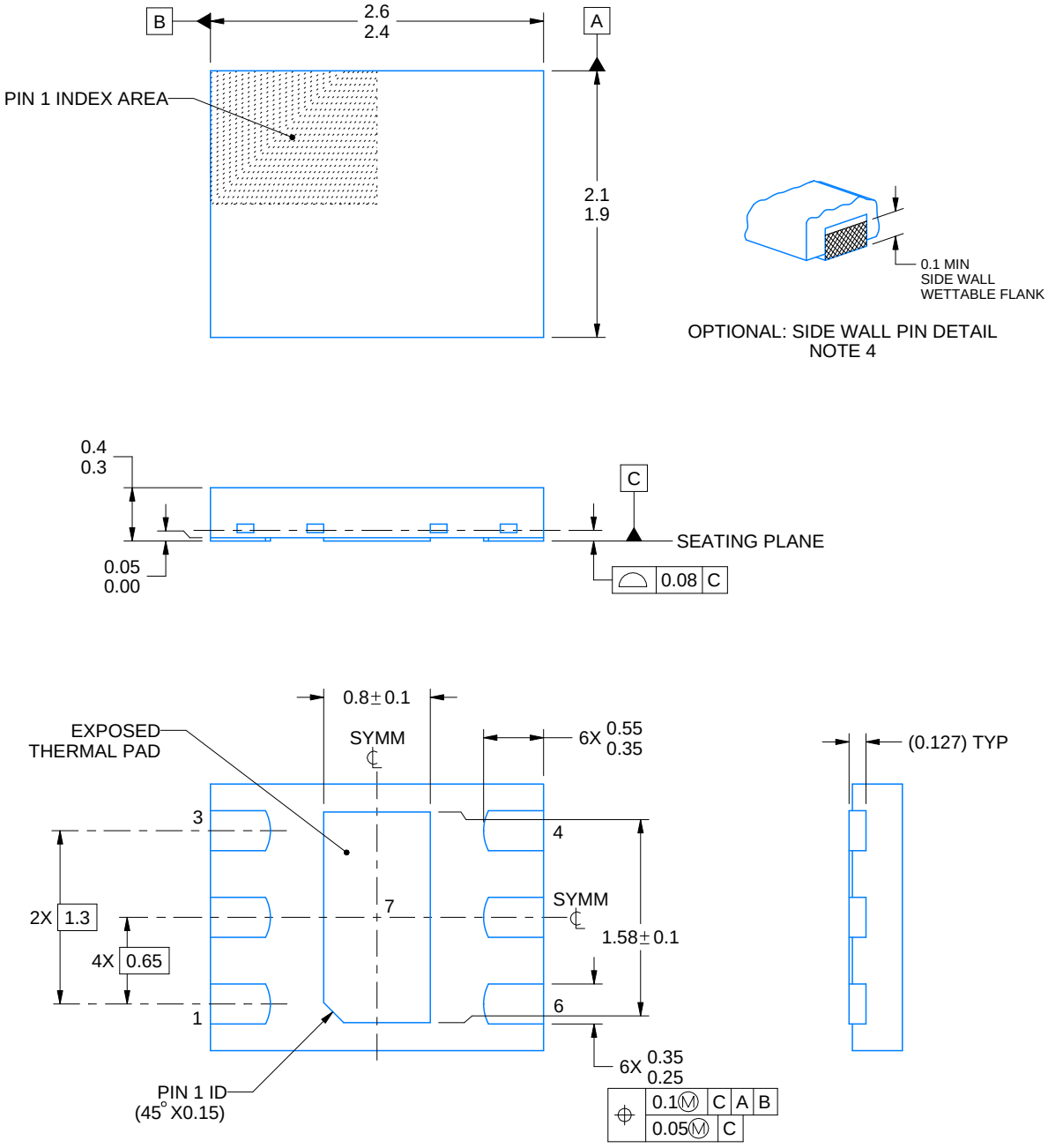

4231611/A 02/2025

NOTES:

1. All linear dimensions are in millimeters. Any dimensions in parenthesis are for reference only. Dimensioning and tolerancing per ASME Y14.5M.
2. This drawing is subject to change without notice.
3. The package thermal pad must be soldered to the printed circuit board for thermal and mechanical performance.
4. Minimum 0.1 mm solder wetting on pin side wall. Available for wettable flank version only.

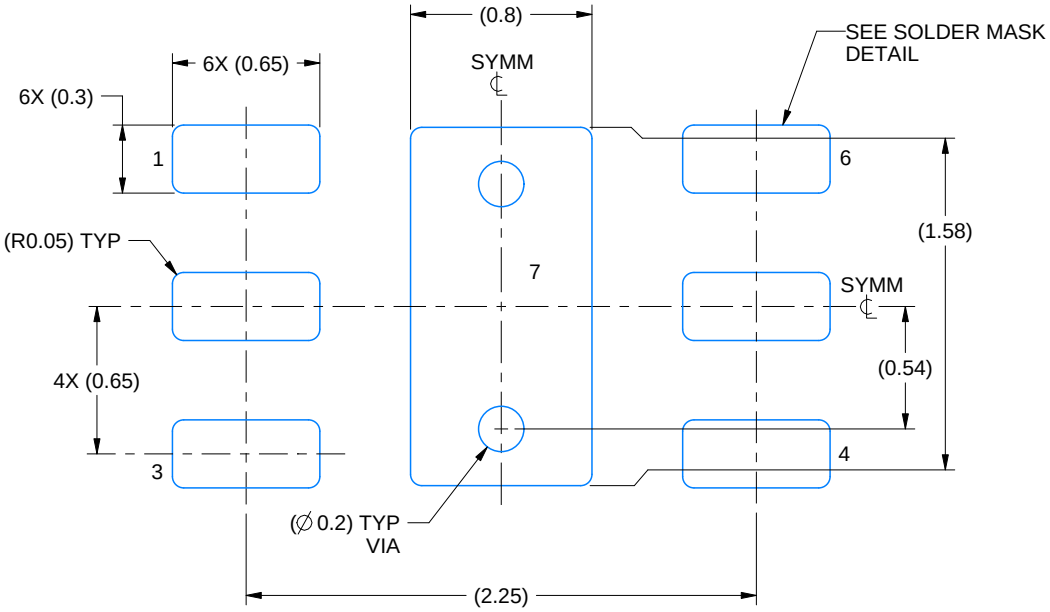

LAND PATTERN EXAMPLE
EXPOSED METAL SHOWN
SCALE: 30X

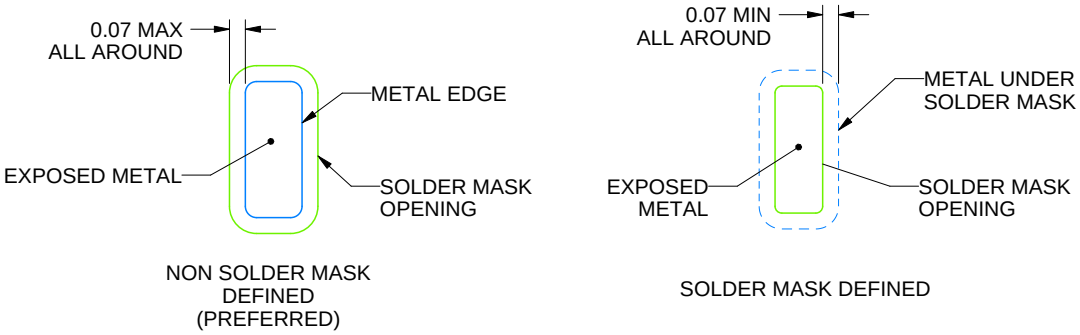

SOLDER MASK DETAILS

4231611/A 02/2025

NOTES: (continued)

5. This package is designed to be soldered to a thermal pad on the board. For more information, see Texas Instruments literature number SLUA271 (www.ti.com/lit/slua271).
6. Vias are optional depending on application, refer to device data sheet. If any vias are implemented, refer to their locations shown on this view. It is recommended that vias under paste be filled, plugged or tented.

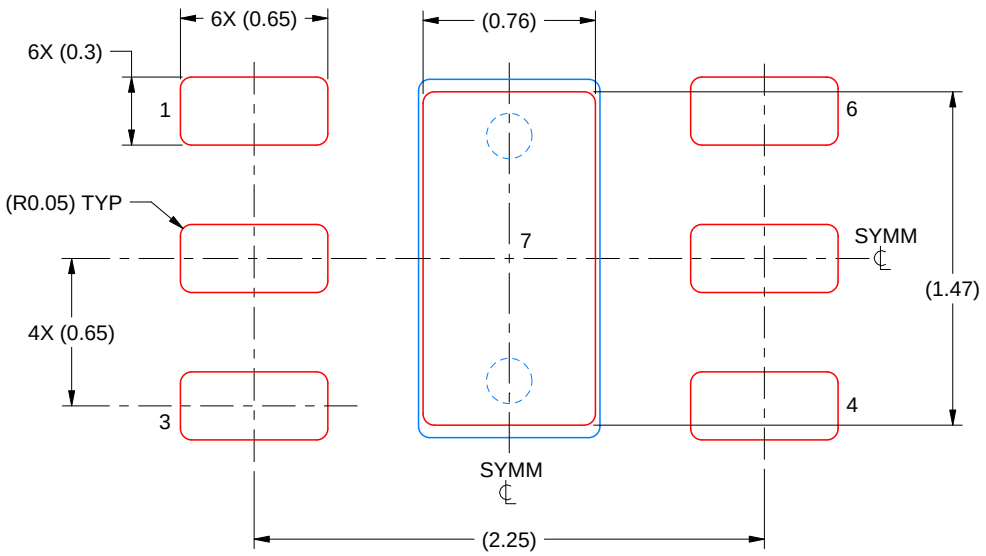

SOLDER PASTE EXAMPLE
BASED ON 0.125 MM THICK STENCIL
SCALE: 30X

EXPOSED PAD 7
88% PRINTED SOLDER COVERAGE BY AREA UNDER PACKAGE

4231611/A 02/2025

NOTES: (continued)

7. Laser cutting apertures with trapezoidal walls and rounded corners may offer better paste release. IPC-7525 may have alternate design recommendations.

IMPORTANT NOTICE AND DISCLAIMER

TI PROVIDES TECHNICAL AND RELIABILITY DATA (INCLUDING DATASHEETS), DESIGN RESOURCES (INCLUDING REFERENCE DESIGNS), APPLICATION OR OTHER DESIGN ADVICE, WEB TOOLS, SAFETY INFORMATION, AND OTHER RESOURCES “AS IS” AND WITH ALL FAULTS, AND DISCLAIMS ALL WARRANTIES, EXPRESS AND IMPLIED, INCLUDING WITHOUT LIMITATION ANY IMPLIED WARRANTIES OF MERCHANTABILITY, FITNESS FOR A PARTICULAR PURPOSE OR NON-INFRINGEMENT OF THIRD PARTY INTELLECTUAL PROPERTY RIGHTS.

These resources are intended for skilled developers designing with TI products. You are solely responsible for (1) selecting the appropriate TI products for your application, (2) designing, validating and testing your application, and (3) ensuring your application meets applicable standards, and any other safety, security, regulatory or other requirements.

These resources are subject to change without notice. TI grants you permission to use these resources only for development of an application that uses the TI products described in the resource. Other reproduction and display of these resources is prohibited. No license is granted to any other TI intellectual property right or to any third party intellectual property right. TI disclaims responsibility for, and you fully indemnify TI and its representatives against any claims, damages, costs, losses, and liabilities arising out of your use of these resources.

TI’s products are provided subject to TI’s Terms of Sale, TI’s General Quality Guidelines, or other applicable terms available either on ti.com or provided in conjunction with such TI products. TI’s provision of these resources does not expand or otherwise alter TI’s applicable warranties or warranty disclaimers for TI products. Unless TI explicitly designates a product as custom or customer-specified, TI products are standard, catalog, general purpose devices.

TI objects to and rejects any additional or different terms you may propose.

Copyright © 2026, Texas Instruments Incorporated

Last updated 10/2025