# MIXED SIGNAL MICROCONTROLLER

## FEATURES

- **Low Supply Voltage Range: 1.8 V to 3.6 V**
- **Ultra-Low Power Consumption**
  - **Active Mode: 220 µA at 1 MHz, 2.2 V**
  - **Standby Mode: 0.5 µA**
  - **Off Mode (RAM Retention): 0.1 µA**
- **Five Power-Saving Modes**
- **Ultra-Fast Wake-Up From Standby Mode in Less Than 1 µs**
- **16-Bit RISC Architecture, 62.5-ns Instruction Cycle Time**
- **Basic Clock Module Configurations**
  - **Internal Frequencies up to 16 MHz With Four Calibrated Frequencies**
  - **Internal Very-Low-Power Low-Frequency (LF) Oscillator**
  - **32-kHz Crystal**
  - **External Digital Clock Source**
- **One 16-Bit Timer_A With Three Capture/Compare Registers**
- **Up to 16 Capacitive-Touch Enabled I/O Pins**
- **Universal Serial Interface (USI) Supporting SPI and I2C**
- **10-Bit 200-ksps Analog-to-Digital (A/D) Converter With Internal Reference, Sample-and-Hold, and Autoscan (MSP430G2x32 Only)**
- **Brownout Detector**
- **Serial Onboard Programming, No External Programming Voltage Needed, Programmable Code Protection by Security Fuse**
- **On-Chip Emulation Logic With Spy-Bi-Wire Interface**
- **Family Members are Summarized in Table 1**
- **Package Options**
  - **TSSOP: 14 Pin, 20 Pin**
  - **PDIP: 20 Pin**
  - **QFN: 16 Pin**
- **For Complete Module Descriptions, See the *MSP430x2xx Family User's Guide* (SLAU144)**

## DESCRIPTION

The Texas Instruments MSP430™ family of ultra-low-power microcontrollers consist of several devices featuring different sets of peripherals targeted for various applications. The architecture, combined with five low-power modes is optimized to achieve extended battery life in portable measurement applications. The device features a powerful 16-bit RISC CPU, 16-bit registers, and constant generators that contribute to maximum code efficiency. The digitally controlled oscillator (DCO) allows wake-up from low-power modes to active mode in less than 1 µs.

The MSP430G2x32 and MSP430G2x02 series of microcontrollers are ultra-low-power mixed signal microcontrollers with built-in 16-bit timers, and up to 16 I/O capacitive-touch enabled pins and built-in communication capability using the universal serial communication interface. The MSP430G2x32 series have a 10-bit A/D converter. For configuration details, see Table 1. Typical applications include low-cost sensor systems that capture analog signals, convert them to digital values, and then process the data for display or for transmission to a host system.

Please be aware that an important notice concerning availability, standard warranty, and use in critical applications of Texas Instruments semiconductor products and disclaimers thereto appears at the end of this data sheet.

MSP430 is a trademark of Texas Instruments.
All other trademarks are the property of their respective owners.

PRODUCTION DATA information is current as of publication date. Products conform to specifications per the terms of the Texas Instruments standard warranty. Production processing does not necessarily include testing of all parameters.

Copyright © 2010–2013, Texas Instruments Incorporated

## Table 1. Available Options[1]

| Device | EEM | Flash (KB) | RAM (B) | Timer_A | ADC10 Channel | USI | CLOCK | I/O | Package Type[2] |
|---|---|---|---|---|---|---|---|---|---|
| MSP430G2432IN20 | 1 | 8 | 256 | 1x TA3 | 8 | 1 | LF, DCO, VLO | 16 | 20-PDIP |
| MSP430G2432IPW20 | | | | | | | | 16 | 20-TSSOP |
| MSP430G2432IRSA16 | | | | | | | | 10 | 16-QFN |
| MSP430G2432IPW14 | | | | | | | | 10 | 14-TSSOP |
| MSP430G2332IN20 | 1 | 4 | 256 | 1x TA3 | 8 | 1 | LF, DCO, VLO | 16 | 20-PDIP |
| MSP430G2332IPW20 | | | | | | | | 16 | 20-TSSOP |
| MSP430G2332IRSA16 | | | | | | | | 10 | 16-QFN |
| MSP430G2332IPW14 | | | | | | | | 10 | 14-TSSOP |
| MSP430G2232IN20 | 1 | 2 | 256 | 1x TA3 | 8 | 1 | LF, DCO, VLO | 16 | 20-PDIP |
| MSP430G2232IPW20 | | | | | | | | 16 | 20-TSSOP |
| MSP430G2232IRSA16 | | | | | | | | 10 | 16-QFN |
| MSP430G2232IPW14 | | | | | | | | 10 | 14-TSSOP |
| MSP430G2132IN20 | 1 | 1 | 128 | 1x TA3 | 8 | 1 | LF, DCO, VLO | 16 | 20-PDIP |
| MSP430G2132IPW20 | | | | | | | | 16 | 20-TSSOP |
| MSP430G2132IRSA16 | | | | | | | | 10 | 16-QFN |
| MSP430G2132IPW14 | | | | | | | | 10 | 14-TSSOP |
| MSP430G2402IN20 | 1 | 8 | 256 | 1x TA3 | - | 1 | LF, DCO, VLO | 16 | 20-PDIP |
| MSP430G2402IPW20 | | | | | | | | 16 | 20-TSSOP |
| MSP430G2402IRSA16 | | | | | | | | 10 | 16-QFN |
| MSP430G2402IPW14 | | | | | | | | 10 | 14-TSSOP |
| MSP430G2302IN20 | 1 | 4 | 256 | 1x TA3 | - | 1 | LF, DCO, VLO | 16 | 20-PDIP |
| MSP430G2302IPW20 | | | | | | | | 16 | 20-TSSOP |
| MSP430G2302IRSA16 | | | | | | | | 10 | 16-QFN |
| MSP430G2302IPW14 | | | | | | | | 10 | 14-TSSOP |
| MSP430G2202IN20 | 1 | 2 | 256 | 1x TA3 | - | 1 | LF, DCO, VLO | 16 | 20-PDIP |
| MSP430G2202IPW20 | | | | | | | | 16 | 20-TSSOP |
| MSP430G2202IRSA16 | | | | | | | | 10 | 16-QFN |
| MSP430G2202IPW14 | | | | | | | | 10 | 14-TSSOP |
| MSP430G2102IN20 | 1 | 1 | 128 | 1x TA3 | - | 1 | LF, DCO, VLO | 16 | 20-PDIP |
| MSP430G2102IPW20 | | | | | | | | 16 | 20-TSSOP |
| MSP430G2102IRSA16 | | | | | | | | 10 | 16-QFN |
| MSP430G2102IPW14 | | | | | | | | 10 | 14-TSSOP |

(1) For the most current package and ordering information, see the Package Option Addendum at the end of this document, or see the TI web site at www.ti.com.
(2) Package drawings, thermal data, and symbolization are available at www.ti.com/packaging.


Copyright © 2010–2013, Texas Instruments Incorporated

# DEVICE PINOUTS

**PW PACKAGE**
**(TOP VIEW)**

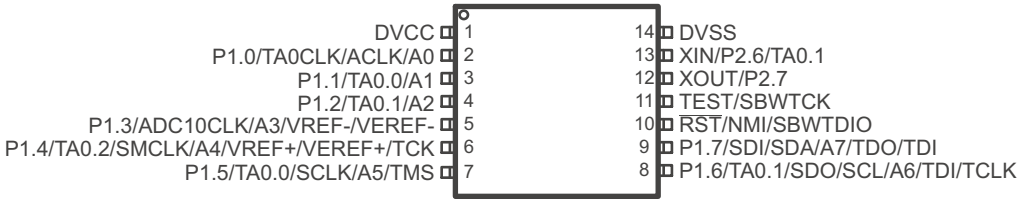


NOTE: ADC10 pin functions are available only on MSP430G2x32.

NOTE: The pulldown resistors of port pins P2.0, P2.1, P2.2, P2.3, P2.4, and P2.5 should be enabled by setting P2REN.x = 1.

**RSA PACKAGE**
**(TOP VIEW)**

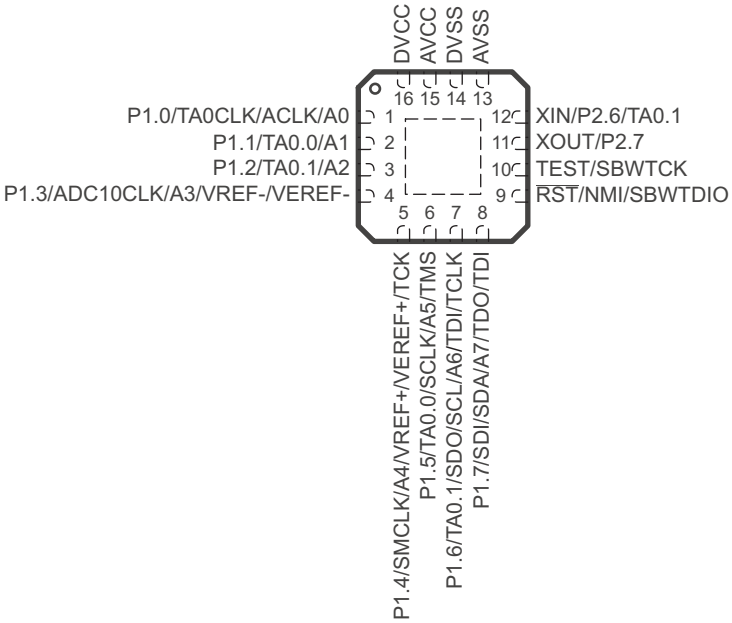


NOTE: ADC10 pin functions are available only on MSP430G2x32.

NOTE: The pulldown resistors of port pins P2.0, P2.1, P2.2, P2.3, P2.4, and P2.5 should be enabled by setting P2REN.x = 1.

**N OR PW PACKAGE**
**(TOP VIEW)**

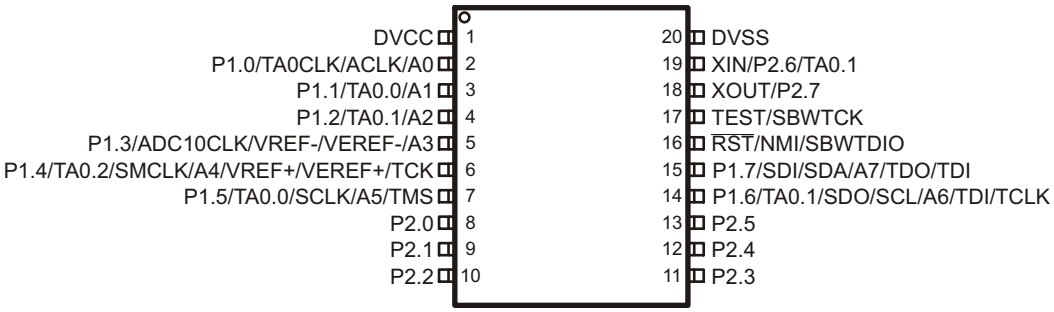


NOTE: ADC10 pin functions are available only on MSP430G2x32.

# FUNCTIONAL BLOCK DIAGRAMS

## Functional Block Diagram, MSP430G2x32

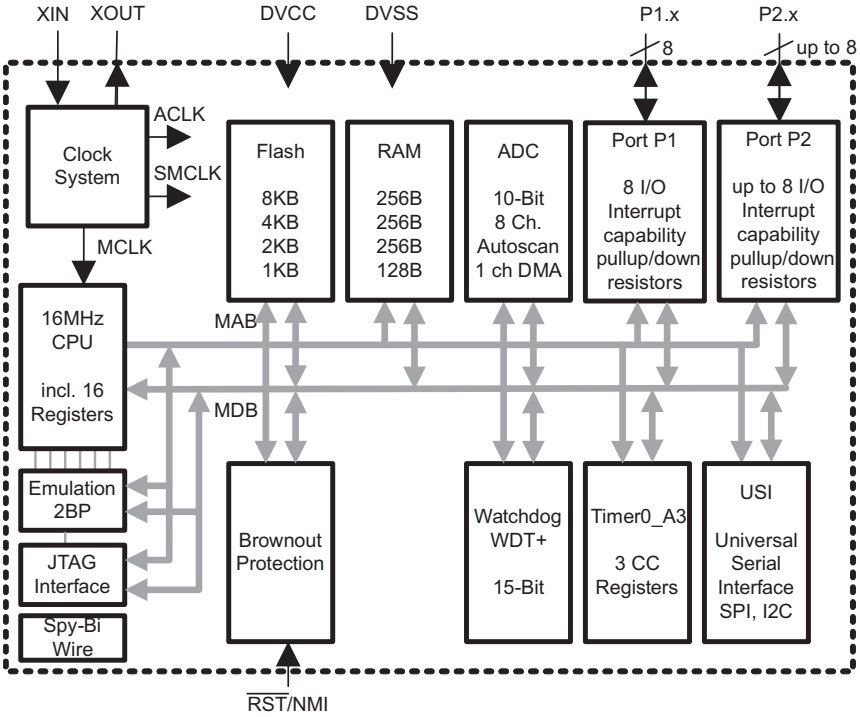


NOTE: Port P2: Two pins are available on the 14-pin and 16-pin package options. Eight pins are available on the 20-pin package options.

## Functional Block Diagram, MSP430G2x02

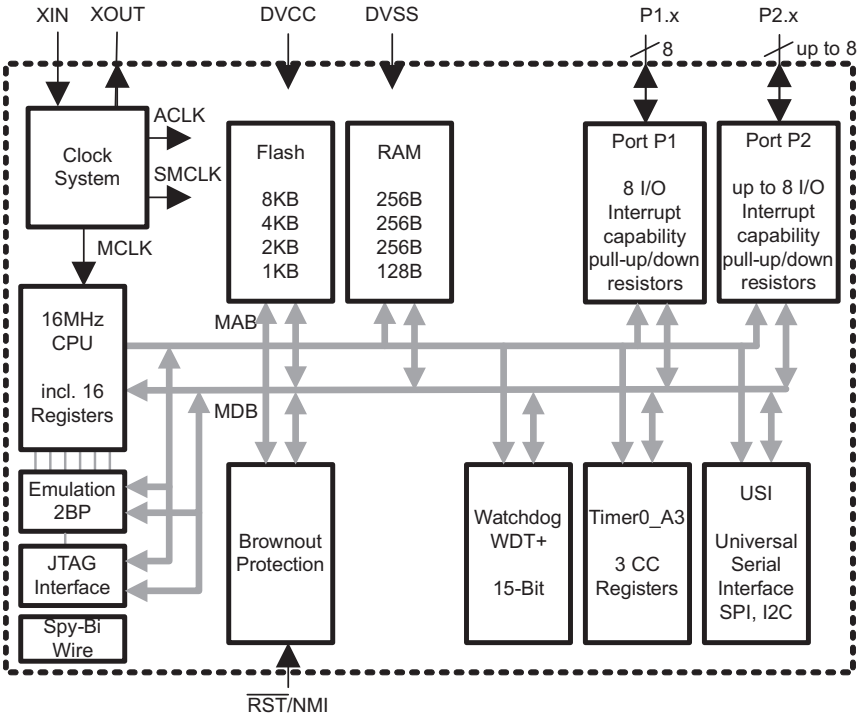


NOTE: Port P2: Two pins are available on the 14-pin and 16-pin package options. Eight pins are available on the 20-pin package options.


Copyright © 2010–2013, Texas Instruments Incorporated

# TERMINAL FUNCTIONS

## Table 2. Terminal Functions

| TERMINAL | | | | I/O | DESCRIPTION |
|---|---|---|---|---|---|
| NAME | NO. | | | | |
| | N14, PW14 | RSA16 | N20, PW20 | | |
| P1.0/<br>TA0CLK/<br>ACLK/<br>A0 | 2 | 1 | 2 | I/O | General-purpose digital I/O pin<br>Timer0_A, clock signal TACLK input<br>ACLK signal output<br>ADC10 analog input A0 (1) |
| P1.1/<br>TA0.0/<br>A1 | 3 | 2 | 3 | I/O | General-purpose digital I/O pin<br>Timer0_A, capture: CCI0A input, compare: Out0 output<br>ADC10 analog input A1 (1) |
| P1.2/<br>TA0.1/<br>A2 | 4 | 3 | 4 | I/O | General-purpose digital I/O pin<br>Timer0_A, capture: CCI1A input, compare: Out1 output<br>ADC10 analog input A2 (1) |
| P1.3/<br>ADC10CLK/<br>A3/<br>VREF-/VEREF | 5 | 4 | 5 | I/O | General-purpose digital I/O pin<br>ADC10, conversion clock output (1)<br>ADC10 analog input A3 (1)<br>ADC10 negative reference voltage (1) |
| P1.4/<br>TA0.2/<br>SMCLK/<br>A4/<br>VREF+/VEREF+/<br>TCK | 6 | 5 | 6 | I/O | General-purpose digital I/O pin<br>Timer0_A, capture: CCI2A input, compare: Out2 output<br>SMCLK signal output<br>ADC10 analog input A4 (1)<br>ADC10 positive reference voltage (1)<br>JTAG test clock, input terminal for device programming and test |
| P1.5/<br>TA0.0/<br>A5/<br>SCLK/<br>TMS | 7 | 6 | 7 | I/O | General-purpose digital I/O pin<br>Timer0_A, compare: Out0 output<br>ADC10 analog input A5 (1)<br>USI: clk input in I2C mode; clk in/output in SPI mode<br>JTAG test mode select, input terminal for device programming and test |
| P1.6/<br>TA0.1/<br>A6/<br>SDO/<br>SCL/<br>TDI/<br>TCLK | 8 | 7 | 14 | I/O | General-purpose digital I/O pin<br>Timer0_A, compare: Out1 output<br>ADC10 analog input A6 (1)<br>USI: Data output in SPI mode<br>USI: I2C clock in I2C mode<br>JTAG test data input or test clock input during programming and test |
| P1.7/<br>A7/<br>SDI/<br>SDA/<br>TDO/TDI (2) | 9 | 8 | 15 | I/O | General-purpose digital I/O pin<br>ADC10 analog input A7 (1)<br>USI: Data input in SPI mode<br>USI: I2C data in I2C mode<br>JTAG test data output terminal or test data input during programming and test |
| P2.0 | - | - | 8 | I/O | General-purpose digital I/O pin |
| P2.1 | - | - | 9 | I/O | General-purpose digital I/O pin |
| P2.2 | - | - | 10 | I/O | General-purpose digital I/O pin |
| P2.3 | - | - | 11 | I/O | General-purpose digital I/O pin |

(1) Available only on MSP430G2x32 devices.
(2) TDO or TDI is selected via JTAG instruction.

Copyright © 2010–2013, Texas Instruments Incorporated

## Table 2. Terminal Functions (continued)

| TERMINAL | | | | I/O | DESCRIPTION |
|---|---|---|---|---|---|
| NAME | NO. | | | | |
| | N14, PW14 | RSA16 | N20, PW20 | | |
| P2.4 | - | - | 12 | I/O | General-purpose digital I/O pin |
| P2.5 | - | - | 13 | I/O | General-purpose digital I/O pin |
| XIN/<br>P2.6/<br>TA0.1 | 13 | 12 | 19 | I/O | Input terminal of crystal oscillator<br>General-purpose digital I/O pin<br>Timer0_A, compare: Out1 output |
| XOUT/<br>P2.7 | 12 | 11 | 18 | I/O | Output terminal of crystal oscillator(3)<br>General-purpose digital I/O pin |
| $\overline{\text{RST}}$/<br>NMI/<br>SBWTDIO/ | 10 | 9 | 16 | I | Reset<br>Nonmaskable interrupt input<br>Spy-Bi-Wire test data input/output during programming and test |
| TEST/<br><br>SBWTCK | 11 | 10 | 17 | I | Selects test mode for JTAG pins on Port 1. The device protection fuse is connected to TEST.<br>Spy-Bi-Wire test clock input during programming and test |
| DVCC | 1 | 16 | 1 | NA | Supply voltage |
| AVCC | NA | 15 | NA | NA | Supply voltage |
| DVSS | 14 | 14 | 20 | NA | Ground reference |
| AVSS | NA | 13 | NA | NA | Ground reference |
| NC | - | - | - | NA | Not connected |
| QFN Pad | - | Pad | - | NA | QFN package pad connection to VSS recommended. |

(3) If XOUT/P2.7 is used as an input, excess current flows until P2SEL.7 is cleared. This is due to the oscillator output driver connection to this pad after reset.


Copyright © 2010–2013, Texas Instruments Incorporated

# SHORT-FORM DESCRIPTION

## CPU

The MSP430™ CPU has a 16-bit RISC architecture that is highly transparent to the application. All operations, other than program-flow instructions, are performed as register operations in conjunction with seven addressing modes for source operand and four addressing modes for destination operand.

The CPU is integrated with 16 registers that provide reduced instruction execution time. The register-to-register operation execution time is one cycle of the CPU clock.

Four of the registers, R0 to R3, are dedicated as program counter, stack pointer, status register, and constant generator, respectively. The remaining registers are general-purpose registers.

Peripherals are connected to the CPU using data, address, and control buses, and can be handled with all instructions.

The instruction set consists of the original 51 instructions with three formats and seven address modes and additional instructions for the expanded address range. Each instruction can operate on word and byte data.

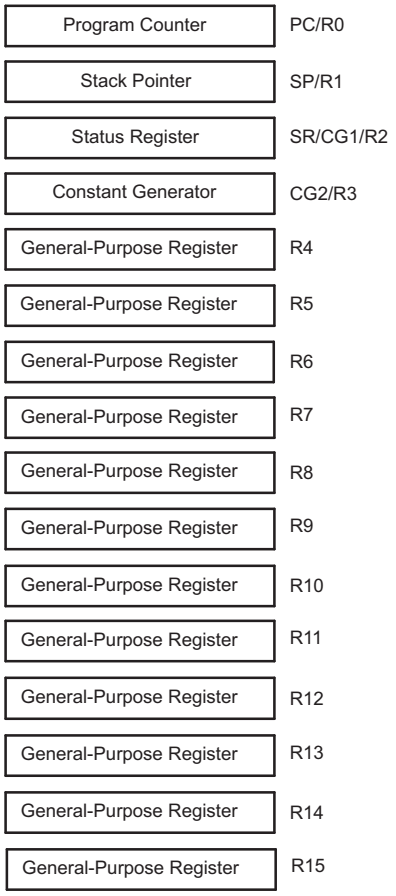


## Instruction Set

The instruction set consists of 51 instructions with three formats and seven address modes. Each instruction can operate on word and byte data. Table 3 shows examples of the three types of instruction formats; Table 4 shows the address modes.

**Table 3. Instruction Word Formats**

| FORMAT | EXAMPLE | OPERATION |
|---|---|---|
| Dual operands, source-destination | ADD R4,R5 | R4 + R5 —> R5 |
| Single operands, destination only | CALL R8 | PC —>(TOS), R8—> PC |
| Relative jump, un/conditional | JNE | Jump-on-equal bit = 0 |

**Table 4. Address Mode Descriptions(1)**

| ADDRESS MODE | S | D | SYNTAX | EXAMPLE | OPERATION |
|---|---|---|---|---|---|
| Register | ✓ | ✓ | MOV Rs,Rd | MOV R10,R11 | R10 —> R11 |
| Indexed | ✓ | ✓ | MOV X(Rn),Y(Rm) | MOV 2(R5),6(R6) | M(2+R5) —> M(6+R6) |
| Symbolic (PC relative) | ✓ | ✓ | MOV EDE,TONI | | M(EDE) —> M(TONI) |
| Absolute | ✓ | ✓ | MOV &MEM,&TCDAT | | M(MEM) —> M(TCDAT) |
| Indirect | ✓ | | MOV @Rn,Y(Rm) | MOV @R10,Tab(R6) | M(R10) —> M(Tab+R6) |
| Indirect autoincrement | ✓ | | MOV @Rn+,Rm | MOV @R10+,R11 | M(R10) —> R11<br>R10 + 2 —> R10 |
| Immediate | ✓ | | MOV #X,TONI | MOV #45,TONI | #45 —> M(TONI) |

(1) S = source, D = destination

Copyright © 2010–2013, Texas Instruments Incorporated

## Operating Modes

The MSP430 devices have one active mode and five software selectable low-power modes of operation. An interrupt event can wake up the device from any of the low-power modes, service the request, and restore back to the low-power mode on return from the interrupt program.

The following six operating modes can be configured by software:

- Active mode (AM)
  - All clocks are active
- Low-power mode 0 (LPM0)
  - CPU is disabled
  - ACLK and SMCLK remain active, MCLK is disabled
- Low-power mode 1 (LPM1)
  - CPU is disabled
  - ACLK and SMCLK remain active, MCLK is disabled
  - DCO's dc generator is disabled if DCO not used in active mode
- Low-power mode 2 (LPM2)
  - CPU is disabled
  - MCLK and SMCLK are disabled
  - DCO's dc generator remains enabled
  - ACLK remains active
- Low-power mode 3 (LPM3)
  - CPU is disabled
  - MCLK and SMCLK are disabled
  - DCO's dc generator is disabled
  - ACLK remains active
- Low-power mode 4 (LPM4)
  - CPU is disabled
  - ACLK is disabled
  - MCLK and SMCLK are disabled
  - DCO's dc generator is disabled
  - Crystal oscillator is stopped


Copyright © 2010–2013, Texas Instruments Incorporated

## Interrupt Vector Addresses

The interrupt vectors and the power-up starting address are located in the address range 0FFFFh to 0FFC0h. The vector contains the 16-bit address of the appropriate interrupt handler instruction sequence.

If the reset vector (located at address 0FFFEh) contains 0FFFFh (for example, if flash is not programmed) the CPU goes into LPM4 immediately after power-up.

**Table 5. Interrupt Sources, Flags, and Vectors**

| INTERRUPT SOURCE | INTERRUPT FLAG | SYSTEM INTERRUPT | WORD ADDRESS | PRIORITY |
|---|---|---|---|---|
| Power-Up<br>External Reset<br>Watchdog Timer+<br>Flash key violation<br>PC out-of-range (1) | PORIFG<br>RSTIFG<br>WDTIFG<br>KEYV (2) | Reset | 0FFFEh | 31, highest |
| NMI<br>Oscillator fault<br>Flash memory access violation | NMIIFG<br>OFIFG<br>ACCVIFG (2) (3) | (non)-maskable<br>(non)-maskable<br>(non)-maskable | 0FFFCh | 30 |
| | | | 0FFFAh | 29 |
| | | | 0FFF8h | 28 |
| | | | 0FFF6h | 27 |
| Watchdog Timer+ | WDTIFG | maskable | 0FFF4h | 26 |
| Timer0_A3 | TACCR0 CCIFG (4) | maskable | 0FFF2h | 25 |
| Timer0_A3 | TACCR2 TACCR1 CCIFG.<br>TAIFGTable 3 (4) | maskable | 0FFF0h | 24 |
| | | | 0FFEEh | 23 |
| | | | 0FFECh | 22 |
| ADC10 (5) | ADC10IFG (4) (5) | maskable | 0FFEAh | 21 |
| USI | USIIFG, USISTTIFG (2) (4) | maskable | 0FFE8h | 20 |
| I/O Port P2 (up to eight flags) | P2IFG.0 to P2IFG.7 (2) (4) | maskable | 0FFE6h | 19 |
| I/O Port P1 (up to eight flags) | P1IFG.0 to P1IFG.7 (2) (4) | maskable | 0FFE4h | 18 |
| | | | 0FFE2h | 17 |
| | | | 0FFE0h | 16 |
| See (6) | | | 0FFDEh to<br>0FFC0h | 15 to 0, lowest |

(1) A reset is generated if the CPU tries to fetch instructions from within the module register memory address range (0h to 01FFh) or from within unused address ranges.
(2) Multiple source flags
(3) (non)-maskable: the individual interrupt-enable bit can disable an interrupt event, but the general interrupt enable cannot.
(4) Interrupt flags are located in the module.
(5) MSP430G2x32 only
(6) The interrupt vectors at addresses 0FFDEh to 0FFC0h are not used in this device and can be used for regular program code if necessary.

Copyright © 2010–2013, Texas Instruments Incorporated

## Special Function Registers (SFRs)

Most interrupt and module enable bits are collected into the lowest address space. Special function register bits not allocated to a functional purpose are not physically present in the device. Simple software access is provided with this arrangement.

| | | |
|---|---|---|
| **Legend** | **rw:** | Bit can be read and written. |
| | **rw-0,1:** | Bit can be read and written. It is reset or set by PUC. |
| | **rw-(0,1):** | Bit can be read and written. It is reset or set by POR. |
| | | SFR bit is not present in device. |

### Table 6. Interrupt Enable Register 1 and 2

| Address | 7 | 6 | 5 | 4 | 3 | 2 | 1 | 0 |
|---|---|---|---|---|---|---|---|---|
| **00h** | | | **ACCVIE** | **NMIIE** | | | **OFIE** | **WDTIE** |
| | | | rw-0 | rw-0 | | | rw-0 | rw-0 |

| | |
|---|---|
| **WDTIE** | Watchdog Timer interrupt enable. Inactive if watchdog mode is selected. Active if Watchdog Timer is configured in interval timer mode. |
| **OFIE** | Oscillator fault interrupt enable |
| **NMIIE** | (Non)maskable interrupt enable |
| **ACCVIE** | Flash access violation interrupt enable |

| Address | 7 | 6 | 5 | 4 | 3 | 2 | 1 | 0 |
|---|---|---|---|---|---|---|---|---|
| **01h** | | | | | | | | |

### Table 7. Interrupt Flag Register 1 and 2

| Address | 7 | 6 | 5 | 4 | 3 | 2 | 1 | 0 |
|---|---|---|---|---|---|---|---|---|
| **02h** | | | | **NMIIFG** | **RSTIFG** | **PORIFG** | **OFIFG** | **WDTIFG** |
| | | | | rw-0 | rw-(0) | rw-(1) | rw-1 | rw-(0) |

| | |
|---|---|
| **WDTIFG** | Set on watchdog timer overflow (in watchdog mode) or security key violation.<br>Reset on $V_{CC}$ power-on or a reset condition at the $\overline{RST}$/NMI pin in reset mode. |
| **OFIFG** | Flag set on oscillator fault. |
| **PORIFG** | Power-On Reset interrupt flag. Set on $V_{CC}$ power-up. |
| **RSTIFG** | External reset interrupt flag. Set on a reset condition at $\overline{RST}$/NMI pin in reset mode. Reset on $V_{CC}$ power-up. |
| **NMIIFG** | Set via $\overline{RST}$/NMI pin |

| Address | 7 | 6 | 5 | 4 | 3 | 2 | 1 | 0 |
|---|---|---|---|---|---|---|---|---|
| **03h** | | | | | | | | |


Copyright © 2010–2013, Texas Instruments Incorporated

## Memory Organization

**Table 8. Memory Organization**

| | | MSP430G2102<br>MSP430G2132 | MSP430G2202<br>MSP430G2232 | MSP430G2302<br>MSP430G2332 | MSP430G2402<br>MSP430G2432 |
|---|---|---|---|---|---|
| Memory | Size | 1kB | 2kB | 4kB | 8kB |
| Main: interrupt vector | Flash | 0xFFFF to 0xFFC0 | 0xFFFF to 0xFFC0 | 0xFFFF to 0xFFC0 | 0xFFFF to 0xFFC0 |
| Main: code memory | Flash | 0xFFFF to 0xFC00 | 0xFFFF to 0xF800 | 0xFFFF to 0xF000 | 0xFFFF to 0xE000 |
| Information memory | Size | 256 Byte | 256 Byte | 256 Byte | 256 Byte |
| | Flash | 010FFh to 01000h | 010FFh to 01000h | 010FFh to 01000h | 010FFh to 01000h |
| RAM | Size | 128 B | 256 B | 256 B | 256 B |
| | | 0x027F to 0x0200 | 0x02FF to 0x0200 | 0x02FF to 0x0200 | 0x02FF to 0x0200 |
| Peripherals | 16-bit | 01FFh to 0100h | 01FFh to 0100h | 01FFh to 0100h | 01FFh to 0100h |
| | 8-bit | 0FFh to 010h | 0FFh to 010h | 0FFh to 010h | 0FFh to 010h |
| | 8-bit SFR | 0Fh to 00h | 0Fh to 00h | 0Fh to 00h | 0Fh to 00h |

## Flash Memory

The flash memory can be programmed via the Spy-Bi-Wire/JTAG port or in-system by the CPU. The CPU can perform single-byte and single-word writes to the flash memory. Features of the flash memory include:

- Flash memory has n segments of main memory and four segments of information memory (A to D) of 64 bytes each. Each segment in main memory is 512 bytes in size.
- Segments 0 to n may be erased in one step, or each segment may be individually erased.
- Segments A to D can be erased individually or as a group with segments 0 to n. Segments A to D are also called *information memory*.
- Segment A contains calibration data. After reset, segment A is protected against programming and erasing. It can be unlocked, but care should be taken not to erase this segment if the device-specific calibration data is required.

## Peripherals

Peripherals are connected to the CPU through data, address, and control buses and can be handled using all instructions. For complete module descriptions, see the *MSP430x2xx Family User's Guide* (SLAU144).

### Oscillator and System Clock

The clock system is supported by the basic clock module that includes support for a 32768-Hz watch crystal oscillator, an internal very-low-power low-frequency oscillator, and an internal digitally controlled oscillator (DCO). The basic clock module is designed to meet the requirements of both low system cost and low power consumption. The internal DCO provides a fast turn-on clock source and stabilizes in less than 1 µs. The basic clock module provides the following clock signals:

- Auxiliary clock (ACLK), sourced either from a 32768-Hz watch crystal or the internal LF oscillator.
- Main clock (MCLK), the system clock used by the CPU.
- Sub-Main clock (SMCLK), the sub-system clock used by the peripheral modules.

The DCO settings to calibrate the DCO output frequency are stored in the information memory segment A.

### Calibration Data Stored in Information Memory Segment A

Calibration data is stored for both the DCO and for ADC10 organized in a tag-length-value structure.

**Table 9. Tags Used by the ADC Calibration Tags**

| NAME | ADDRESS | VALUE | DESCRIPTION |
|---|---|---|---|
| TAG_DCO_30 | 0x10F6 | 0x01 | DCO frequency calibration at $V_{CC}$ = 3 V and $T_A$ = 30°C at calibration |
| TAG_ADC10_1 | 0x10DA | 0x10 | ADC10_1 calibration tag |
| TAG_EMPTY | - | 0xFE | Identifier for empty memory areas |

**Table 10. Labels Used by the ADC Calibration Tags**

| LABEL | CONDITION AT CALIBRATION / DESCRIPTION | SIZE | ADDRESS OFFSET |
|---|---|---|---|
| CAL_ADC_25T85 | INCHx = 0x1010, REF2_5 = 1, $T_A$ = 85°C | word | 0x0010 |
| CAL_ADC_25T30 | INCHx = 0x1010, REF2_5 = 1, $T_A$ = 30°C | word | 0x000E |
| CAL_ADC_25VREF_FACTOR | REF2_5 = 1, $T_A$ = 30°C, $I_{(VREF+)}$ = 1 mA | word | 0x000C |
| CAL_ADC_15T85 | INCHx = 0x1010, REF2_5 = 0, $T_A$ = 85°C | word | 0x000A |
| CAL_ADC_15T30 | INCHx = 0x1010, REF2_5 = 0, $T_A$ = 30°C | word | 0x0008 |
| CAL_ADC_15VREF_FACTOR | REF2_5 = 0, $T_A$ = 30°C, $I_{(VREF+)}$ = 0.5 mA | word | 0x0006 |
| CAL_ADC_OFFSET | External VREF = 1.5 V, $f_{(ADC10CLK)}$ = 5 MHz | word | 0x0004 |
| CAL_ADC_GAIN_FACTOR | External VREF = 1.5 V, $f_{(ADC10CLK)}$ = 5 MHz | word | 0x0002 |
| CAL_BC1_1MHz | - | byte | 0x0009 |
| CAL_DCO_1MHz | - | byte | 0x00008 |
| CAL_BC1_8MHz | - | byte | 0x0007 |
| CAL_DCO_8MHz | - | byte | 0x0006 |
| CAL_BC1_12MHz | - | byte | 0x0005 |
| CAL_DCO_12MHz | - | byte | 0x0004 |
| CAL_BC1_16MHz | - | byte | 0x0003 |
| CAL_DCO_16MHz | - | byte | 0x0002 |


Copyright © 2010–2013, Texas Instruments Incorporated

### Main DCO Characteristics

- All ranges selected by RSELx overlap with RSELx + 1: RSELx = 0 overlaps RSELx = 1, ... RSELx = 14 overlaps RSELx = 15.
- DCO control bits DCOx have a step size as defined by parameter $S_{DCO}$.
- Modulation control bits MODx select how often $f_{DCO(RSEL,DCO+1)}$ is used within the period of 32 DCOCLK cycles. The frequency $f_{DCO(RSEL,DCO)}$ is used for the remaining cycles. The frequency is an average equal to:

$$f_{average} = \frac{32 \times f_{DCO(RSEL,DCO)} \times f_{DCO(RSEL,DCO+1)}}{MOD \times f_{DCO(RSEL,DCO)} + (32 - MOD) \times f_{DCO(RSEL,DCO+1)}}$$

### Brownout

The brownout circuit is implemented to provide the proper internal reset signal to the device during power on and power off.

### Digital I/O

There are two 8-bit I/O ports implemented:

- All individual I/O bits are independently programmable.
- Any combination of input, output, and interrupt condition(port P1 and port P2 only) is possible.
- Edge-selectable interrupt input capability for all the eight bits of port P1 and port P2, if available.
- Read/write access to port-control registers is supported by all instructions.
- Each I/O has an individually programmable pullup/pulldown resistor.
- Each I/O has an individually programmable pin-oscillator enable bit to enable low-cost capacitive-touch detection.

### WDT+ Watchdog Timer

The primary function of the watchdog timer (WDT+) module is to perform a controlled system restart after a software problem occurs. If the selected time interval expires, a system reset is generated. If the watchdog function is not needed in an application, the module can be disabled or configured as an interval timer and can generate interrupts at selected time intervals.

Copyright © 2010–2013, Texas Instruments Incorporated

### Timer0_A3

Timer0_A3 is a 16-bit timer/counter with three capture/compare registers. Timer0_A3 can support multiple capture/compares, PWM outputs, and interval timing. Timer0_A3 also has extensive interrupt capabilities. Interrupts may be generated from the counter on overflow conditions and from each of the capture/compare registers.

**Table 11. Timer0_A3 Signal Connections (1)**

| INPUT PIN NUMBER | | | DEVICE INPUT SIGNAL | MODULE INPUT NAME | MODULE BLOCK | MODULE OUTPUT SIGNAL | OUTPUT PIN NUMBER | | |
|---|---|---|---|---|---|---|---|---|---|
| N20, PW20 | PW14 | RSA16 | | | | | N20, PW20 | PW14 | RSA16 |
| P1.0-2 | P1.0-2 | P1.0-1 | TACLK | TACLK | Timer | NA | | | |
| | | | ACLK | ACLK | | | | | |
| | | | SMCLK | SMCLK | | | | | |
| PinOsc | PinOsc | PinOsc | | INCLK | | | | | |
| P1.1-3 | P1.1-3 | P1.1-2 | TA0.0 | CCI0A | CCR0 | TA0 | P1.1-3 | P1.1-3 | P1.1-2 |
| | | | ACLK | CCI0B | | | P1.5-7 | P1.5-7 | P1.5-6 |
| | | | $V_{SS}$ | GND | | | | | |
| | | | $V_{CC}$ | $V_{CC}$ | | | | | |
| P1.2-4 | P1.2-4 | P1.2-3 | TA0.1 | CCI1A | CCR1 | TA1 | P1.2-4 | P1.2-4 | P1.2-3 |
| | | | CAOUT | CCI1B | | | P1.6-14 | P1.6-8 | P1.6-7 |
| | | | $V_{SS}$ | GND | | | P2.6-19 | P2.6-13 | P2.6-12 |
| | | | $V_{CC}$ | $V_{CC}$ | | | | | |
| P1.4-6 | P1.4-6 | P1.4-5 | TA0.2 | CCI2A | CCR2 | TA2 | P1.4-6 | P1.4-6 | P1.4-5 |
| PinOsc | PinOsc | PinOsc | TA0.2 | CCI2B | | | | | |
| | | | $V_{SS}$ | GND | | | | | |
| | | | $V_{CC}$ | $V_{CC}$ | | | | | |

(1) Only one pin-oscillator must be enabled at a time.

### USI

The universal serial interface (USI) module is used for serial data communication and provides the basic hardware for synchronous communication protocols like SPI and I2C.

### ADC10 (MSP430G2x32 Only)

The ADC10 module supports fast, 10-bit analog-to-digital conversions. The module implements a 10-bit SAR core, sample select control, reference generator and data transfer controller, or DTC, for automatic conversion result handling, allowing ADC samples to be converted and stored without any CPU intervention.


Copyright © 2010–2013, Texas Instruments Incorporated

## Peripheral File Map

### Table 12. Peripherals With Word Access

| MODULE | REGISTER DESCRIPTION | REGISTER NAME | OFFSET |
|---|---|---|---|
| **ADC10 (MSP430G2x32 devices only)** | ADC data transfer start address | ADC10SA | 01BCh |
| | ADC memory | ADC10MEM | 01B4h |
| | ADC control register 1 | ADC10CTL1 | 01B2h |
| | ADC control register 0 | ADC10CTL0 | 01B0h |
| **Timer0_A3** | Capture/compare register | TACCR2 | 0176h |
| | Capture/compare register | TACCR1 | 0174h |
| | Capture/compare register | TACCR0 | 0172h |
| | Timer_A register | TAR | 0170h |
| | Capture/compare control | TACCTL2 | 0166h |
| | Capture/compare control | TACCTL1 | 0164h |
| | Capture/compare control | TACCTL0 | 0162h |
| | Timer_A control | TACTL | 0160h |
| | Timer_A interrupt vector | TAIV | 012Eh |
| **Flash Memory** | Flash control 3 | FCTL3 | 012Ch |
| | Flash control 2 | FCTL2 | 012Ah |
| | Flash control 1 | FCTL1 | 0128h |
| **Watchdog Timer+** | Watchdog/timer control | WDTCTL | 0120h |

Copyright © 2010–2013, Texas Instruments Incorporated

**Table 13. Peripherals With Byte Access**

| MODULE | REGISTER DESCRIPTION | REGISTER NAME | OFFSET |
|---|---|---|---|
| **ADC10 (MSP430G2x32 devices only)** | Analog enable 0 | ADC10AE0 | 04Ah |
| | ADC data transfer control register 1 | ADC10DTC1 | 049h |
| | ADC data transfer control register 0 | ADC10DTC0 | 048h |
| **USI** | USI control 0 | USICTL0 | 078h |
| | USI control 1 | USICTL1 | 079h |
| | USI clock control | USICKCTL | 07Ah |
| | USI bit counter | USICNT | 07Bh |
| | USI shift register | USISR | 07Ch |
| **Basic Clock System+** | Basic clock system control 3 | BCSCTL3 | 053h |
| | Basic clock system control 2 | BCSCTL2 | 058h |
| | Basic clock system control 1 | BCSCTL1 | 057h |
| | DCO clock frequency control | DCOCTL | 056h |
| **Port P2** | Port P2 selection 2 | P2SEL2 | 042h |
| | Port P2 resistor enable | P2REN | 02Fh |
| | Port P2 selection | P2SEL | 02Eh |
| | Port P2 interrupt enable | P2IE | 02Dh |
| | Port P2 interrupt edge select | P2IES | 02Ch |
| | Port P2 interrupt flag | P2IFG | 02Bh |
| | Port P2 direction | P2DIR | 02Ah |
| | Port P2 output | P2OUT | 029h |
| | Port P2 input | P2IN | 028h |
| **Port P1** | Port P1 selection 2 | P1SEL2 | 041h |
| | Port P1 resistor enable | P1REN | 027h |
| | Port P1 selection | P1SEL | 026h |
| | Port P1 interrupt enable | P1IE | 025h |
| | Port P1 interrupt edge select | P1IES | 024h |
| | Port P1 interrupt flag | P1IFG | 023h |
| | Port P1 direction | P1DIR | 022h |
| | Port P1 output | P1OUT | 021h |
| | Port P1 input | P1IN | 020h |
| **Special Function** | SFR interrupt flag 2 | IFG2 | 003h |
| | SFR interrupt flag 1 | IFG1 | 002h |
| | SFR interrupt enable 2 | IE2 | 001h |
| | SFR interrupt enable 1 | IE1 | 000h |


Copyright © 2010–2013, Texas Instruments Incorporated

## Absolute Maximum Ratings[(1)]

| | | |
|---|---|---|
| Voltage applied at $V_{CC}$ to $V_{SS}$ | | –0.3 V to 4.1 V |
| Voltage applied to any pin[(2)] | | –0.3 V to $V_{CC}$ + 0.3 V |
| Diode current at any device pin | | ±2 mA |
| Storage temperature range, $T_{stg}$ [(3)] | Unprogrammed device | –55°C to 150°C |
| | Programmed device | –55°C to 150°C |

(1) Stresses beyond those listed under "absolute maximum ratings" may cause permanent damage to the device. These are stress ratings only, and functional operation of the device at these or any other conditions beyond those indicated under "recommended operating conditions" is not implied. Exposure to absolute-maximum-rated conditions for extended periods may affect device reliability.
(2) All voltages referenced to $V_{SS}$. The JTAG fuse-blow voltage, $V_{FB}$, is allowed to exceed the absolute maximum rating. The voltage is applied to the TEST pin when blowing the JTAG fuse.
(3) Higher temperature may be applied during board soldering according to the current JEDEC J-STD-020 specification with peak reflow temperatures not higher than classified on the device label on the shipping boxes or reels.

## Recommended Operating Conditions

Typical values are specified at $V_{CC}$ = 3.3 V and $T_A$ = 25°C (unless otherwise noted)

| | | | MIN | NOM | MAX | UNIT |
|---|---|---|---|---|---|---|
| $V_{CC}$ | Supply voltage | During program execution | 1.8 | | 3.6 | V |
| | | During flash programming/erase | 2.2 | | 3.6 | |
| $V_{SS}$ | Supply voltage | | | 0 | | V |
| $T_A$ | Operating free-air temperature | | -40 | | 85 | °C |
| $f_{SYSTEM}$ | Processor frequency (maximum MCLK frequency using the USART module)[(1)(2)] | $V_{CC}$ = 1.8 V, Duty cycle = 50% ± 10% | dc | | 6 | MHz |
| | | $V_{CC}$ = 2.7 V, Duty cycle = 50% ± 10% | dc | | 12 | |
| | | $V_{CC}$ = 3.3 V, Duty cycle = 50% ± 10% | dc | | 16 | |

(1) The MSP430 CPU is clocked directly with MCLK. Both the high and low phase of MCLK must not exceed the pulse width of the specified maximum frequency.
(2) Modules might have a different maximum input clock specification. See the specification of the respective module in this data sheet.

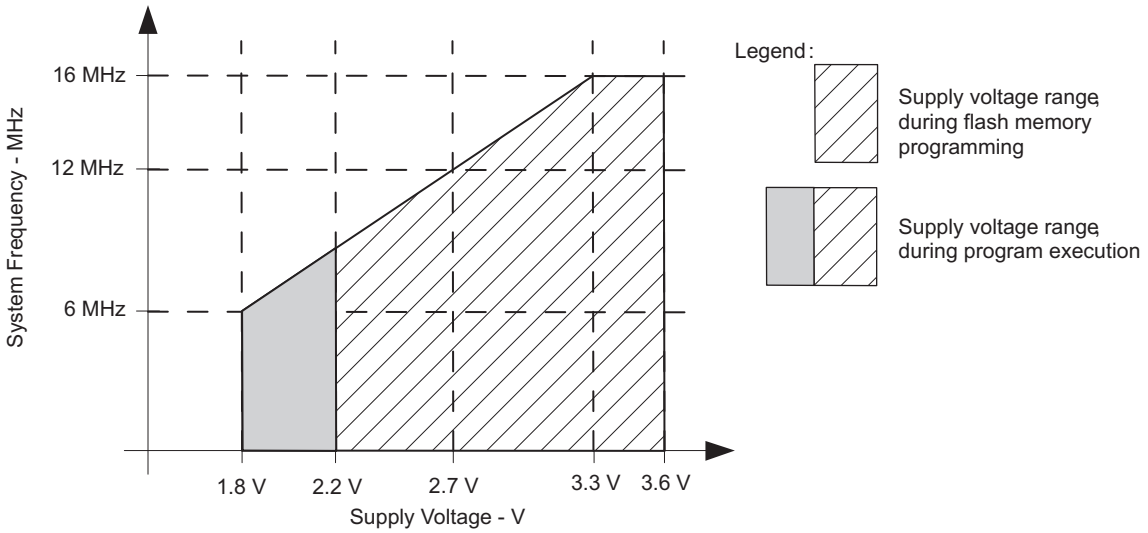


Note: Minimum processor frequency is defined by system clock. Flash program or erase operations require a minimum $V_{CC}$ of 2.2 V.

**Figure 1. Safe Operating Area**

## Electrical Characteristics

### Active Mode Supply Current Into $V_{CC}$ Excluding External Current

over recommended ranges of supply voltage and operating free-air temperature (unless otherwise noted)[1][2]

| PARAMETER | | TEST CONDITIONS | $V_{CC}$ | MIN | TYP | MAX | UNIT |
|---|---|---|---|---|---|---|---|
| $I_{AM,1MHz}$ | Active mode (AM) current (1 MHz) | $f_{DCO} = f_{MCLK} = f_{SMCLK} = 1$ MHz, $f_{ACLK} = 32768$ Hz, Program executes in flash, BCSCTL1 = CALBC1_1MHZ, DCOCTL = CALDCO_1MHZ, CPUOFF = 0, SCG0 = 0, SCG1 = 0, OSCOFF = 0 | 2.2 V | | 220 | | µA |
| | | | 3 V | | 320 | 400 | |

(1) All inputs are tied to 0 V or to $V_{CC}$. Outputs do not source or sink any current.
(2) The currents are characterized with a Micro Crystal CC4V-T1A SMD crystal with a load capacitance of 9 pF. The internal and external load capacitance is chosen to closely match the required 9 pF.

### Typical Characteristics – Active Mode Supply Current (Into $V_{CC}$)

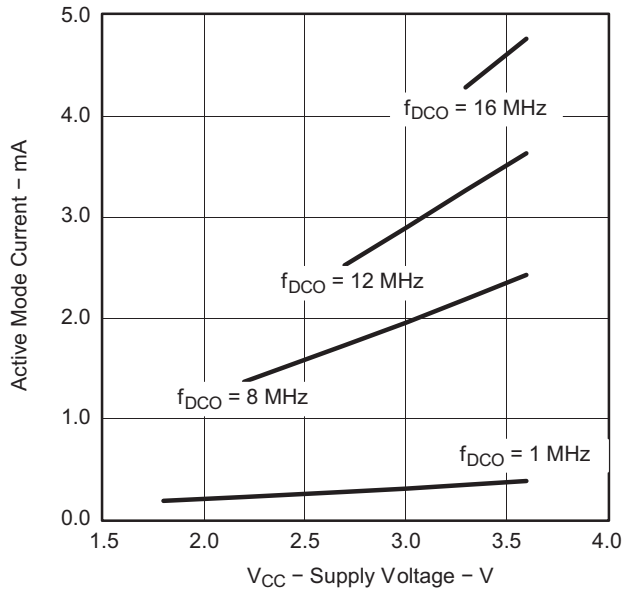


**Figure 2. Active Mode Current vs $V_{CC}$, $T_A$ = 25°C**

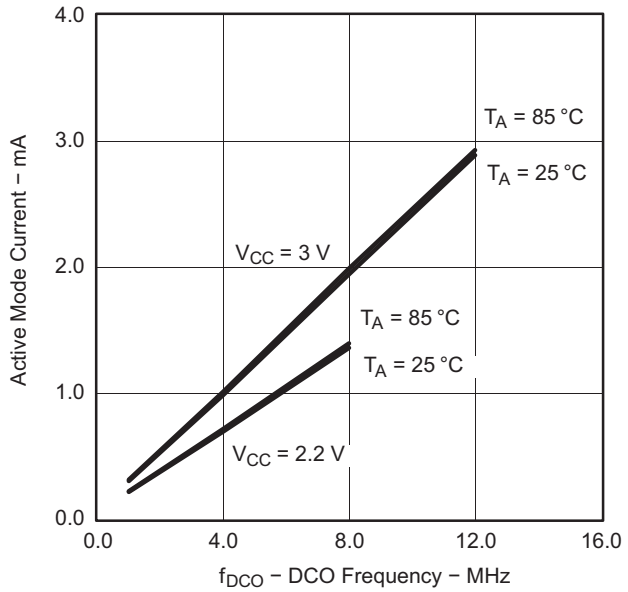


**Figure 3. Active Mode Current vs DCO Frequency**


Copyright © 2010–2013, Texas Instruments Incorporated

## Low-Power Mode Supply Currents (Into $V_{CC}$) Excluding External Current

over recommended ranges of supply voltage and operating free-air temperature (unless otherwise noted)(1) (2)

| PARAMETER | | TEST CONDITIONS | $T_A$ | $V_{CC}$ | MIN | TYP | MAX | UNIT |
|---|---|---|---|---|---|---|---|---|
| $I_{LPM0,1MHz}$ | Low-power mode 0 (LPM0) current(3) | $f_{MCLK}$ = 0 MHz,<br>$f_{SMCLK}$ = $f_{DCO}$ = 1 MHz,<br>$f_{ACLK}$ = 32768 Hz,<br>BCSCTL1 = CALBC1_1MHZ,<br>DCOCTL = CALDCO_1MHZ,<br>CPUOFF = 1, SCG0 = 0, SCG1 = 0,<br>OSCOFF = 0 | 25°C | 2.2 V | | 55 | | µA |
| $I_{LPM2}$ | Low-power mode 2 (LPM2) current(4) | $f_{MCLK}$ = $f_{SMCLK}$ = 0 MHz,<br>$f_{DCO}$ = 1 MHz,<br>$f_{ACLK}$ = 32768 Hz,<br>BCSCTL1 = CALBC1_1MHZ,<br>DCOCTL = CALDCO_1MHZ,<br>CPUOFF = 1, SCG0 = 0, SCG1 = 1,<br>OSCOFF = 0 | 25°C | 2.2 V | | 22 | | µA |
| $I_{LPM3,LFXT1}$ | Low-power mode 3 (LPM3) current(4) | $f_{DCO}$ = $f_{MCLK}$ = $f_{SMCLK}$ = 0 MHz,<br>$f_{ACLK}$ = 32768 Hz,<br>CPUOFF = 1, SCG0 = 1, SCG1 = 1,<br>OSCOFF = 0 | 25°C | 2.2 V | | 0.7 | 1.0 | µA |
| $I_{LPM3,VLO}$ | Low-power mode 3 current, (LPM3)(4) | $f_{DCO}$ = $f_{MCLK}$ = $f_{SMCLK}$ = 0 MHz,<br>$f_{ACLK}$ from internal LF oscillator (VLO),<br>CPUOFF = 1, SCG0 = 1, SCG1 = 1,<br>OSCOFF = 0 | 25°C | 2.2 V | | 0.5 | 0.7 | µA |
| $I_{LPM4}$ | Low-power mode 4 (LPM4) current(5) | $f_{DCO}$ = $f_{MCLK}$ = $f_{SMCLK}$ = 0 MHz,<br>$f_{ACLK}$ = 0 Hz,<br>CPUOFF = 1, SCG0 = 1, SCG1 = 1,<br>OSCOFF = 1 | 25°C | 2.2 V | | 0.1 | 0.5 | µA |
| | | | 85°C | 2.2 V | | 0.8 | 1.5 | µA |

(1) All inputs are tied to 0 V or to $V_{CC}$. Outputs do not source or sink any current.
(2) The currents are characterized with a Micro Crystal CC4V-T1A SMD crystal with a load capacitance of 9 pF.
(3) Current for brownout and WDT clocked by SMCLK included.
(4) Current for brownout and WDT clocked by ACLK included.
(5) Current for brownout included.

## Typical Characteristics Low-Power Mode Supply Currents

over recommended ranges of supply voltage and operating free-air temperature (unless otherwise noted)

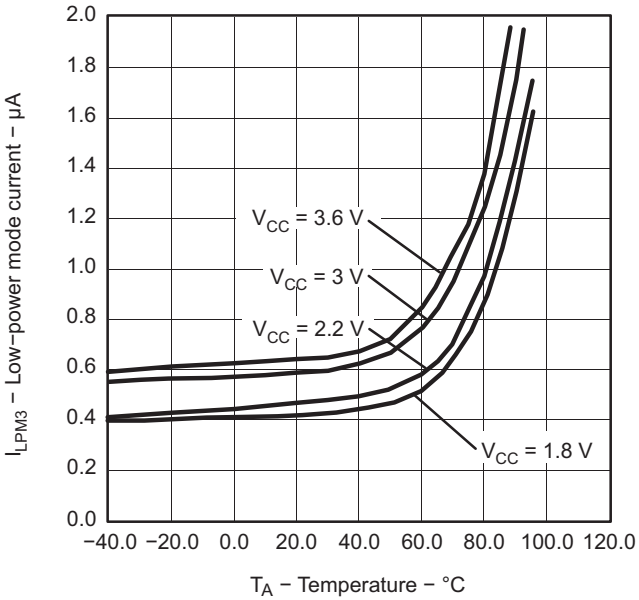


**Figure 4. LPM3 Current vs Temperature**

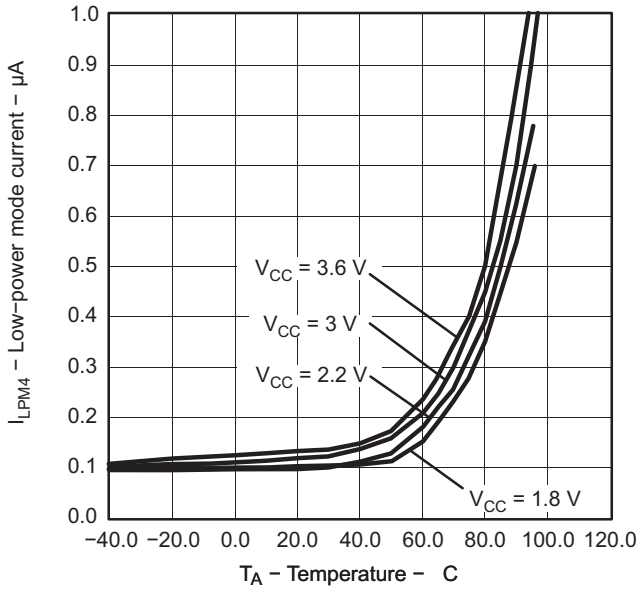


**Figure 5. LPM4 Current vs Temperature**

Copyright © 2010–2013, Texas Instruments Incorporated

## Schmitt-Trigger Inputs – Ports Px(1)

over recommended ranges of supply voltage and operating free-air temperature (unless otherwise noted)

| PARAMETER | | TEST CONDITIONS | $V_{CC}$ | MIN | TYP | MAX | UNIT |
|---|---|---|---|---|---|---|---|
| $V_{IT+}$ | Positive-going input threshold voltage | | | 0.45 $V_{CC}$ | | 0.75 $V_{CC}$ | V |
| | | | 3 V | 1.35 | | 2.25 | |
| $V_{IT-}$ | Negative-going input threshold voltage | | | 0.25 $V_{CC}$ | | 0.55 $V_{CC}$ | V |
| | | | 3 V | 0.75 | | 1.65 | |
| $V_{hys}$ | Input voltage hysteresis ($V_{IT+} – V_{IT-}$) | | 3 V | 0.3 | | 1 | V |
| $R_{Pull}$ | Pullup/pulldown resistor | For pullup: $V_{IN} = V_{SS}$<br>For pulldown: $V_{IN} = V_{CC}$ | 3 V | 20 | 35 | 50 | kΩ |
| $C_I$ | Input capacitance | $V_{IN} = V_{SS}$ or $V_{CC}$ | | | 5 | | pF |

(1) An external signal sets the interrupt flag every time the minimum interrupt pulse width $t_{(int)}$ is met. It may be set even with trigger signals shorter than $t_{(int)}$.

## Leakage Current – Ports Px

over recommended ranges of supply voltage and operating free-air temperature (unless otherwise noted)

| PARAMETER | | TEST CONDITIONS | $V_{CC}$ | MIN | MAX | UNIT |
|---|---|---|---|---|---|---|
| $I_{lkg(Px.x)}$ | High-impedance leakage current | (1) (2) | 3 V | | ±50 | nA |

(1) The leakage current is measured with $V_{SS}$ or $V_{CC}$ applied to the corresponding pin(s), unless otherwise noted.
(2) The leakage of the digital port pins is measured individually. The port pin is selected for input, and the pullup/pulldown resistor is disabled.

## Outputs – Ports Px

over recommended ranges of supply voltage and operating free-air temperature (unless otherwise noted)

| PARAMETER | | TEST CONDITIONS | $V_{CC}$ | MIN | TYP | MAX | UNIT |
|---|---|---|---|---|---|---|---|
| $V_{OH}$ | High-level output voltage | $I_{(OHmax)} = –6$ mA(1) | 3 V | | $V_{CC} – 0.3$ | | V |
| $V_{OL}$ | Low-level output voltage | $I_{(OLmax)} = 6$ mA(1) | 3 V | | $V_{SS} + 0.3$ | | V |

(1) The maximum total current, $I_{(OHmax)}$ and $I_{(OLmax)}$, for all outputs combined should not exceed ±48 mA to hold the maximum voltage drop specified.

## Output Frequency – Ports Px

over recommended ranges of supply voltage and operating free-air temperature (unless otherwise noted)

| PARAMETER | | TEST CONDITIONS | $V_{CC}$ | MIN | TYP | MAX | UNIT |
|---|---|---|---|---|---|---|---|
| $f_{Px.y}$ | Port output frequency (with load) | Px.y, $C_L = 20$ pF, $R_L = 1$ kΩ(1) (2) | 3 V | | 12 | | MHz |
| $f_{Port_CLK}$ | Clock output frequency | Px.y, $C_L = 20$ pF(2) | 3 V | | 16 | | MHz |

(1) A resistive divider with two 0.5-kΩ resistors between $V_{CC}$ and $V_{SS}$ is used as load. The output is connected to the center tap of the divider.
(2) The output voltage reaches at least 10% and 90% $V_{CC}$ at the specified toggle frequency.


Copyright © 2010–2013, Texas Instruments Incorporated

## Typical Characteristics – Outputs

over recommended ranges of supply voltage and operating free-air temperature (unless otherwise noted)

TYPICAL LOW-LEVEL OUTPUT CURRENT
vs
LOW-LEVEL OUTPUT VOLTAGE

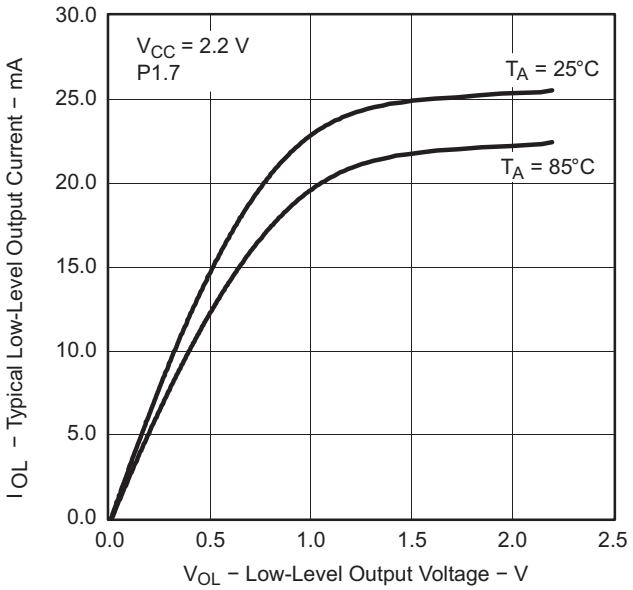


**Figure 6.**

TYPICAL LOW-LEVEL OUTPUT CURRENT
vs
LOW-LEVEL OUTPUT VOLTAGE

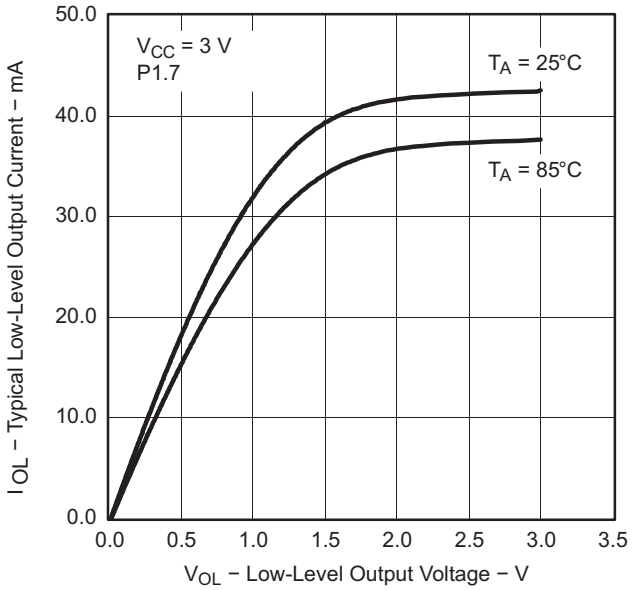


**Figure 7.**

TYPICAL HIGH-LEVEL OUTPUT CURRENT
vs
HIGH-LEVEL OUTPUT VOLTAGE

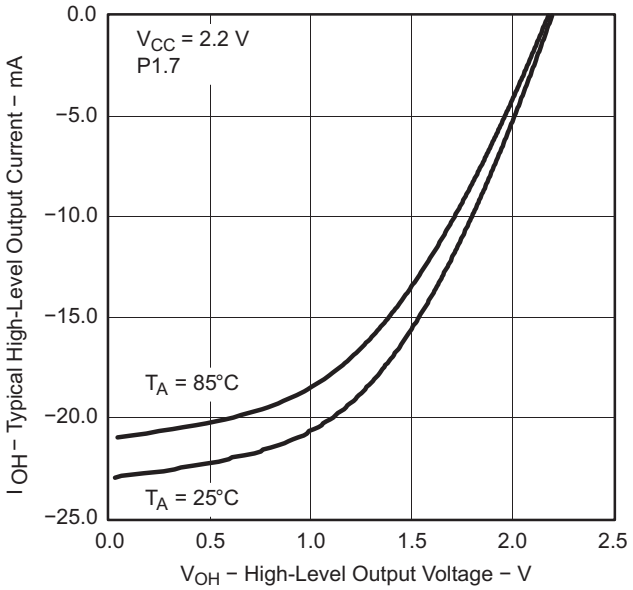


**Figure 8.**

TYPICAL HIGH-LEVEL OUTPUT CURRENT
vs
HIGH-LEVEL OUTPUT VOLTAGE

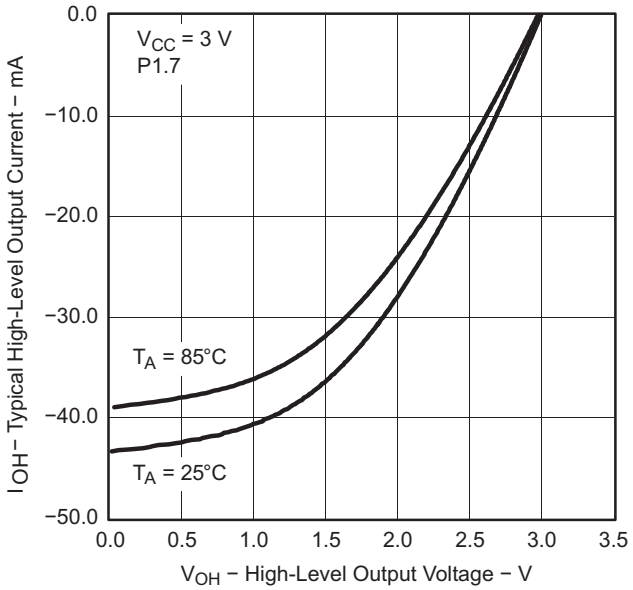


**Figure 9.**

## Pin-Oscillator Frequency – Ports Px

over recommended ranges of supply voltage and operating free-air temperature (unless otherwise noted)

| PARAMETER | | TEST CONDITIONS | $V_{CC}$ | MIN | TYP | MAX | UNIT |
|---|---|---|---|---|---|---|---|
| $fo_{P1.x}$ | Port output oscillation frequency | P1.y, $C_L$ = 10 pF, $R_L$ = 100 kΩ(1)(2) | 3 V | | 1400 | | kHz |
| | | P1.y, $C_L$ = 20 pF, $R_L$ = 100 kΩ(1)(2) | | | 900 | | |
| $fo_{P2.x}$ | Port output oscillation frequency | P2.0 to P2.5, $C_L$ = 10 pF, $R_L$ = 100 kΩ(1)(2) | 3 V | | 1800 | | kHz |
| | | P2.0 to P2.5, $C_L$ = 20 pF, $R_L$ = 100 kΩ(1)(2) | | | 1000 | | |
| $fo_{P2.6/7}$ | Port output oscillation frequency | P2.6 and P2.7, $C_L$ = 20 pF, $R_L$ = 100 kΩ(1)(2) | 3 V | | 700 | | kHz |

(1) A resistive divider with two 50-kΩ resistors between $V_{CC}$ and $V_{SS}$ is used as load. The output is connected to the center tap of the divider.
(2) The output voltage oscillates with a typical amplitude of 700 mV at the specified toggle frequency.

## Typical Characteristics – Pin-Oscillator Frequency

TYPICAL OSCILLATING FREQUENCY
vs
LOAD CAPACITANCE

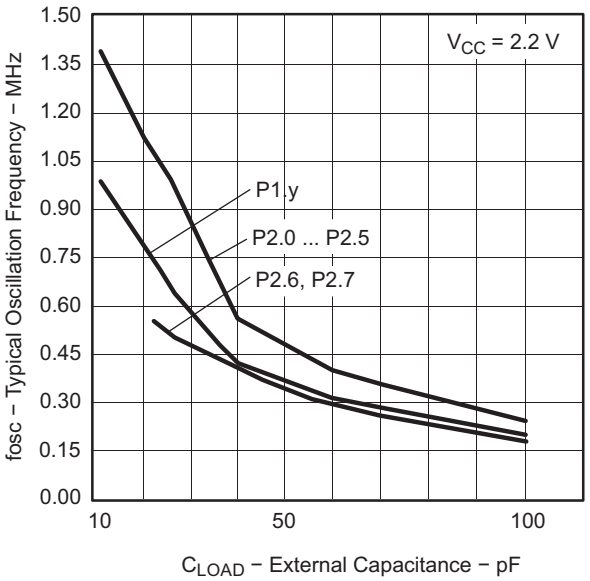


**Figure 10.**

TYPICAL OSCILLATING FREQUENCY
vs
LOAD CAPACITANCE

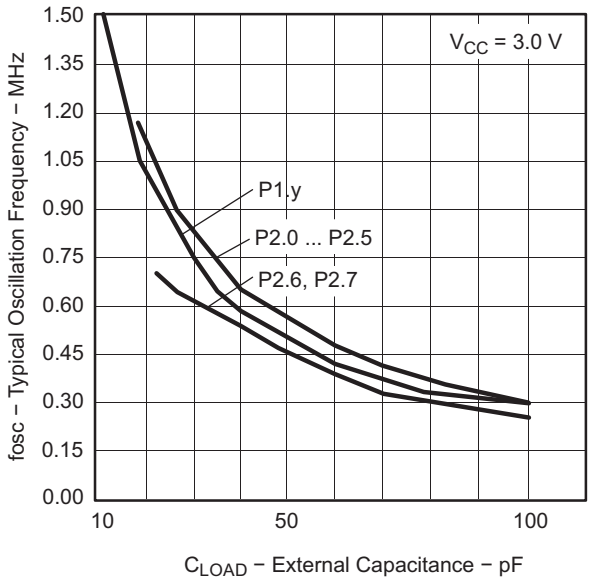


**Figure 11.**


Copyright © 2010–2013, Texas Instruments Incorporated

## POR, BOR(1)(2)

over recommended ranges of supply voltage and operating free-air temperature (unless otherwise noted)

| PARAMETER | | TEST CONDITIONS | $V_{CC}$ | MIN | TYP | MAX | UNIT |
|---|---|---|---|---|---|---|---|
| $V_{CC(start)}$ | See Figure 12 | $dV_{CC}/dt \le 3$ V/s | | | $0.7 \times V_{(B_IT-)}$ | | V |
| $V_{(B_IT-)}$ | See Figure 12 through Figure 14 | $dV_{CC}/dt \le 3$ V/s | | | 1.40 | | V |
| $V_{hys(B_IT-)}$ | See Figure 12 | $dV_{CC}/dt \le 3$ V/s | | | 140 | | mV |
| $t_{d(BOR)}$ | See Figure 12 | | | | | 2000 | µs |
| $t_{(reset)}$ | Pulse length needed at $\overline{RST}$/NMI pin to accepted reset internally | | 2.2 V | 2 | | | µs |

(1) The current consumption of the brownout module is already included in the $I_{CC}$ current consumption data. The voltage level $V_{(B_IT-)}$ + $V_{hys(B_IT-)}$is ≤ 1.8 V.
(2) During power up, the CPU begins code execution following a period of $t_{d(BOR)}$ after $V_{CC} = V_{(B_IT-)} + V_{hys(B_IT-)}$. The default DCO settings must not be changed until $V_{CC} \ge V_{CC(min)}$, where $V_{CC(min)}$ is the minimum supply voltage for the desired operating frequency.

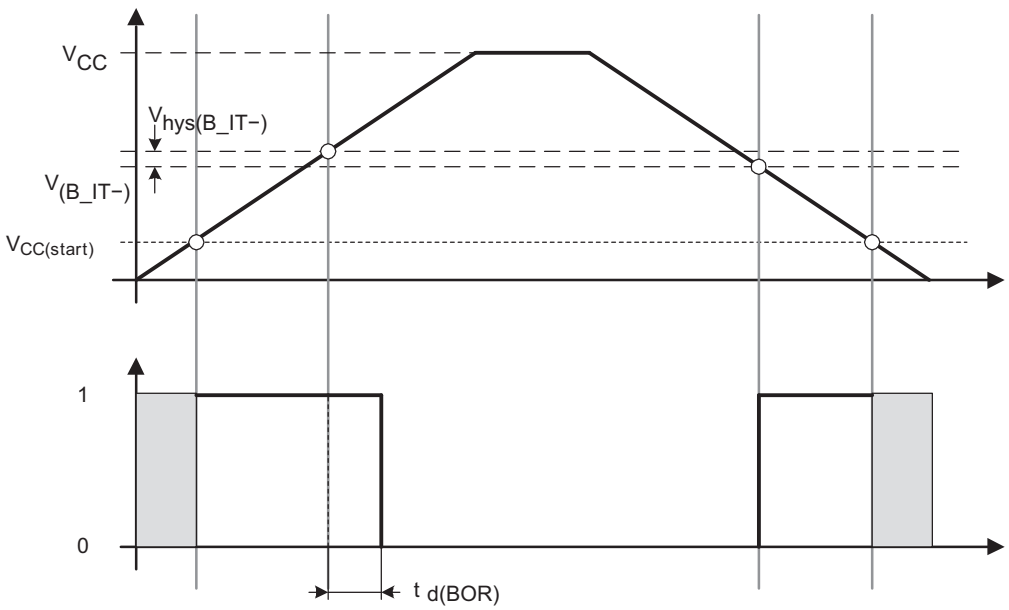


**Figure 12. POR and BOR vs Supply Voltage**

## Typical Characteristics – POR/Brownout Reset (BOR)

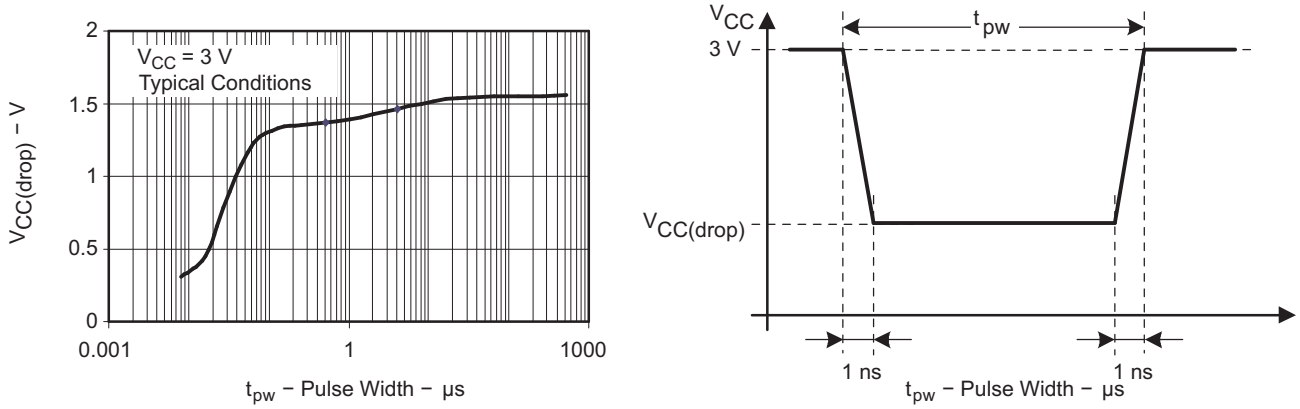


**Figure 13. $V_{CC(drop)}$ Level With a Square Voltage Drop to Generate a POR or BOR Signal**

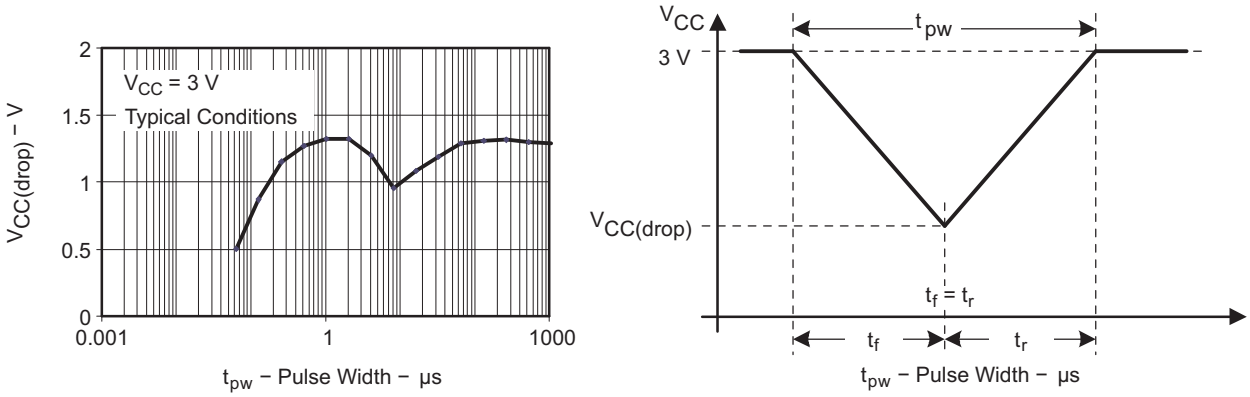


**Figure 14. $V_{CC(drop)}$ Level With a Triangle Voltage Drop to Generate a POR or BOR Signal**


Copyright © 2010–2013, Texas Instruments Incorporated

## DCO Frequency

over recommended ranges of supply voltage and operating free-air temperature (unless otherwise noted)

| PARAMETER | | TEST CONDITIONS | $V_{CC}$ | MIN | TYP | MAX | UNIT |
|---|---|---|---|---|---|---|---|
| $V_{CC}$ | Supply voltage | RSELx < 14 | | 1.8 | | 3.6 | V |
| | | RSELx = 14 | | 2.2 | | 3.6 | V |
| | | RSELx = 15 | | 3 | | 3.6 | V |
| $f_{DCO(0,0)}$ | DCO frequency (0, 0) | RSELx = 0, DCOx = 0, MODx = 0 | 3 V | 0.06 | | 0.14 | MHz |
| $f_{DCO(0,3)}$ | DCO frequency (0, 3) | RSELx = 0, DCOx = 3, MODx = 0 | 3 V | 0.07 | | 0.17 | MHz |
| $f_{DCO(1,3)}$ | DCO frequency (1, 3) | RSELx = 1, DCOx = 3, MODx = 0 | 3 V | | 0.15 | | MHz |
| $f_{DCO(2,3)}$ | DCO frequency (2, 3) | RSELx = 2, DCOx = 3, MODx = 0 | 3 V | | 0.21 | | MHz |
| $f_{DCO(3,3)}$ | DCO frequency (3, 3) | RSELx = 3, DCOx = 3, MODx = 0 | 3 V | | 0.30 | | MHz |
| $f_{DCO(4,3)}$ | DCO frequency (4, 3) | RSELx = 4, DCOx = 3, MODx = 0 | 3 V | | 0.41 | | MHz |
| $f_{DCO(5,3)}$ | DCO frequency (5, 3) | RSELx = 5, DCOx = 3, MODx = 0 | 3 V | | 0.58 | | MHz |
| $f_{DCO(6,3)}$ | DCO frequency (6, 3) | RSELx = 6, DCOx = 3, MODx = 0 | 3 V | 0.54 | | 1.06 | MHz |
| $f_{DCO(7,3)}$ | DCO frequency (7, 3) | RSELx = 7, DCOx = 3, MODx = 0 | 3 V | 0.80 | | 1.50 | MHz |
| $f_{DCO(8,3)}$ | DCO frequency (8, 3) | RSELx = 8, DCOx = 3, MODx = 0 | 3 V | | 1.6 | | MHz |
| $f_{DCO(9,3)}$ | DCO frequency (9, 3) | RSELx = 9, DCOx = 3, MODx = 0 | 3 V | | 2.3 | | MHz |
| $f_{DCO(10,3)}$ | DCO frequency (10, 3) | RSELx = 10, DCOx = 3, MODx = 0 | 3 V | | 3.4 | | MHz |
| $f_{DCO(11,3)}$ | DCO frequency (11, 3) | RSELx = 11, DCOx = 3, MODx = 0 | 3 V | | 4.25 | | MHz |
| $f_{DCO(12,3)}$ | DCO frequency (12, 3) | RSELx = 12, DCOx = 3, MODx = 0 | 3 V | 4.30 | | 7.30 | MHz |
| $f_{DCO(13,3)}$ | DCO frequency (13, 3) | RSELx = 13, DCOx = 3, MODx = 0 | 3 V | 6.00 | | 9.60 | MHz |
| $f_{DCO(14,3)}$ | DCO frequency (14, 3) | RSELx = 14, DCOx = 3, MODx = 0 | 3 V | 8.60 | | 13.9 | MHz |
| $f_{DCO(15,3)}$ | DCO frequency (15, 3) | RSELx = 15, DCOx = 3, MODx = 0 | 3 V | 12.0 | | 18.5 | MHz |
| $f_{DCO(15,7)}$ | DCO frequency (15, 7) | RSELx = 15, DCOx = 7, MODx = 0 | 3 V | 16.0 | | 26.0 | MHz |
| $S_{RSEL}$ | Frequency step between range RSEL and RSEL+1 | $S_{RSEL} = f_{DCO(RSEL+1,DCO)}/f_{DCO(RSEL,DCO)}$ | 3 V | | 1.35 | | ratio |
| $S_{DCO}$ | Frequency step between tap DCO and DCO+1 | $S_{DCO} = f_{DCO(RSEL,DCO+1)}/f_{DCO(RSEL,DCO)}$ | 3 V | | 1.08 | | ratio |
| Duty cycle | | Measured at SMCLK output | 3 V | | 50 | | % |

Copyright © 2010–2013, Texas Instruments Incorporated

## Calibrated DCO Frequencies – Tolerance

over recommended ranges of supply voltage and operating free-air temperature (unless otherwise noted)

| PARAMETER | TEST CONDITIONS | $T_A$ | $V_{CC}$ | MIN | TYP | MAX | UNIT |
|---|---|---|---|---|---|---|---|
| 1-MHz tolerance over temperature(1) | BCSCTL1= CALBC1_1MHZ, DCOCTL = CALDCO_1MHZ, calibrated at 30°C and 3 V | 0°C to 85°C | 3 V | -3 | ±0.5 | +3 | % |
| 1-MHz tolerance over $V_{CC}$ | BCSCTL1= CALBC1_1MHZ, DCOCTL = CALDCO_1MHZ, calibrated at 30°C and 3 V | 30°C | 1.8 V to 3.6 V | -3 | ±2 | +3 | % |
| 1-MHz tolerance overall | BCSCTL1= CALBC1_1MHZ, DCOCTL = CALDCO_1MHZ, calibrated at 30°C and 3 V | -40°C to 85°C | 1.8 V to 3.6 V | -6 | ±3 | +6 | % |
| 8-MHz tolerance over temperature(1) | BCSCTL1= CALBC1_8MHZ, DCOCTL = CALDCO_8MHZ, calibrated at 30°C and 3 V | 0°C to 85°C | 3 V | -3 | ±0.5 | +3 | % |
| 8-MHz tolerance over $V_{CC}$ | BCSCTL1= CALBC1_8MHZ, DCOCTL = CALDCO_8MHZ, calibrated at 30°C and 3 V | 30°C | 2.2 V to 3.6 V | -3 | ±2 | +3 | % |
| 8-MHz tolerance overall | BCSCTL1= CALBC1_8MHZ, DCOCTL = CALDCO_8MHZ, calibrated at 30°C and 3 V | -40°C to 85°C | 2.2 V to 3.6 V | -6 | ±3 | +6 | % |
| 12-MHz tolerance over temperature(1) | BCSCTL1= CALBC1_12MHZ, DCOCTL = CALDCO_12MHZ, calibrated at 30°C and 3 V | 0°C to 85°C | 3 V | -3 | ±0.5 | +3 | % |
| 12-MHz tolerance over $V_{CC}$ | BCSCTL1= CALBC1_12MHZ, DCOCTL = CALDCO_12MHZ, calibrated at 30°C and 3 V | 30°C | 2.7 V to 3.6 V | -3 | ±2 | +3 | % |
| 12-MHz tolerance overall | BCSCTL1= CALBC1_12MHZ, DCOCTL = CALDCO_12MHZ, calibrated at 30°C and 3 V | -40°C to 85°C | 2.7 V to 3.6 V | -6 | ±3 | +6 | % |
| 16-MHz tolerance over temperature(1) | BCSCTL1= CALBC1_16MHZ, DCOCTL = CALDCO_16MHZ, calibrated at 30°C and 3 V | 0°C to 85°C | 3.3 V | -3 | ±0.5 | +3 | % |
| 16-MHz tolerance over $V_{CC}$ | BCSCTL1= CALBC1_16MHZ, DCOCTL = CALDCO_16MHZ, calibrated at 30°C and 3 V | 30°C | 3.3 V to 3.6 V | -3 | ±2 | +3 | % |
| 16-MHz tolerance overall | BCSCTL1= CALBC1_16MHZ, DCOCTL = CALDCO_16MHZ, calibrated at 30°C and 3 V | -40°C to 85°C | 3.3 V to 3.6 V | -6 | ±3 | +6 | % |

(1) This is the frequency change from the measured frequency at 30°C over temperature.


Copyright © 2010–2013, Texas Instruments Incorporated

## Wake-Up From Lower-Power Modes (LPM3. LPM4)

over recommended ranges of supply voltage and operating free-air temperature (unless otherwise noted)

| PARAMETER | | TEST CONDITIONS | $V_{CC}$ | MIN | TYP | MAX | UNIT |
|---|---|---|---|---|---|---|---|
| $t_{DCO,LPM3/4}$ | DCO clock wake-up time from LPM3 or LPM4 (1) | BCSCTL1 = CALBC1_1MHZ, DCOCTL = CALDCO_1MHZ | 3 V | | 1.5 | | µs |
| $t_{CPU,LPM3/4}$ | CPU wake-up time from LPM3 or LPM4 (2) | | | | $1/f_{MCLK}$ + $t_{Clock,LPM3/4}$ | | |

(1) The DCO clock wake-up time is measured from the edge of an external wake-up signal (for example, a port interrupt) to the first clock edge observable externally on a clock pin (MCLK or SMCLK).
(2) Parameter applicable only if DCOCLK is used for MCLK.

### Typical Characteristics – DCO Clock Wake-Up Time From LPM3 or LPM4

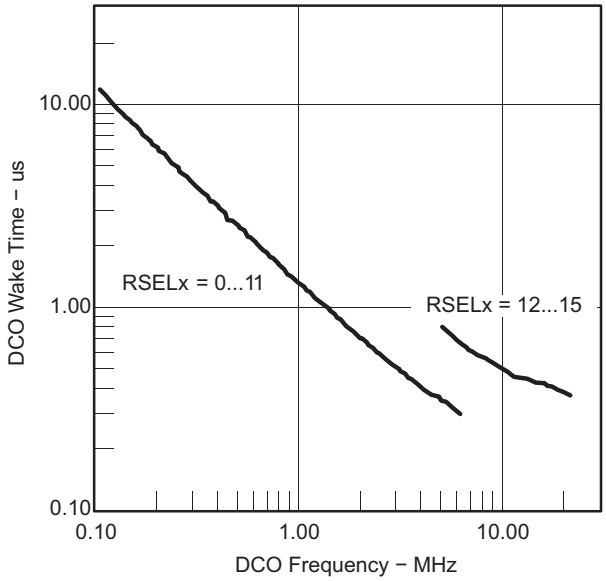


**Figure 15. DCO Wake-Up Time From LPM3 vs DCO Frequency**

## Crystal Oscillator, XT1, Low-Frequency Mode[1]

over recommended ranges of supply voltage and operating free-air temperature (unless otherwise noted)

| PARAMETER | | TEST CONDITIONS | $V_{CC}$ | MIN | TYP | MAX | UNIT |
|---|---|---|---|---|---|---|---|
| $f_{LFXT1,LF}$ | LFXT1 oscillator crystal frequency, LF mode 0, 1 | XTS = 0, LFXT1Sx = 0 or 1 | 1.8 V to 3.6 V | | 32768 | | Hz |
| $f_{LFXT1,LF,logic}$ | LFXT1 oscillator logic level square wave input frequency, LF mode | XTS = 0, XCAPx = 0, LFXT1Sx = 3 | 1.8 V to 3.6 V | 10000 | 32768 | 50000 | Hz |
| $OA_{LF}$ | Oscillation allowance for LF crystals | XTS = 0, LFXT1Sx = 0, $f_{LFXT1,LF}$ = 32768 Hz, $C_{L,eff}$ = 6 pF | | | 500 | | kΩ |
| | | XTS = 0, LFXT1Sx = 0, $f_{LFXT1,LF}$ = 32768 Hz, $C_{L,eff}$ = 12 pF | | | 200 | | |
| $C_{L,eff}$ | Integrated effective load capacitance, LF mode[2] | XTS = 0, XCAPx = 0 | | | 1 | | pF |
| | | XTS = 0, XCAPx = 1 | | | 5.5 | | |
| | | XTS = 0, XCAPx = 2 | | | 8.5 | | |
| | | XTS = 0, XCAPx = 3 | | | 11 | | |
| Duty cycle | LF mode | XTS = 0, Measured at P2.0/ACLK, $f_{LFXT1,LF}$ = 32768 Hz | 2.2 V | 30 | 50 | 70 | % |
| $f_{Fault,LF}$ | Oscillator fault frequency, LF mode[3] | XTS = 0, XCAPx = 0, LFXT1Sx = 3[4] | 2.2 V | 10 | | 10000 | Hz |

(1) To improve EMI on the XT1 oscillator, the following guidelines should be observed.
(a) Keep the trace between the device and the crystal as short as possible.
(b) Design a good ground plane around the oscillator pins.
(c) Prevent crosstalk from other clock or data lines into oscillator pins XIN and XOUT.
(d) Avoid running PCB traces underneath or adjacent to the XIN and XOUT pins.
(e) Use assembly materials and praxis to avoid any parasitic load on the oscillator XIN and XOUT pins.
(f) If conformal coating is used, ensure that it does not induce capacitive or resistive leakage between the oscillator pins.
(g) Do not route the XOUT line to the JTAG header to support the serial programming adapter as shown in other documentation. This signal is no longer required for the serial programming adapter.
(2) Includes parasitic bond and package capacitance (approximately 2 pF per pin).
Because the PCB adds additional capacitance, it is recommended to verify the correct load by measuring the ACLK frequency. For a correct setup, the effective load capacitance should always match the specification of the used crystal.
(3) Frequencies below the MIN specification set the fault flag. Frequencies above the MAX specification do not set the fault flag. Frequencies in between might set the flag.
(4) Measured with logic-level input frequency but also applies to operation with crystals.

## Internal Very-Low-Power Low-Frequency Oscillator (VLO)

over recommended ranges of supply voltage and operating free-air temperature (unless otherwise noted)

| PARAMETER | | $T_A$ | $V_{CC}$ | MIN | TYP | MAX | UNIT |
|---|---|---|---|---|---|---|---|
| $f_{VLO}$ | VLO frequency | -40°C to 85°C | 3 V | 4 | 12 | 20 | kHz |
| $df_{VLO}/d_T$ | VLO frequency temperature drift | -40°C to 85°C | 3 V | | 0.5 | | %/°C |
| $df_{VLO}/dV_{CC}$ | VLO frequency supply voltage drift | 25°C | 1.8 V to 3.6 V | | 4 | | %/V |

## Timer_A

over recommended ranges of supply voltage and operating free-air temperature (unless otherwise noted)

| PARAMETER | | TEST CONDITIONS | $V_{CC}$ | MIN | TYP | MAX | UNIT |
|---|---|---|---|---|---|---|---|
| $f_{TA}$ | Timer_A input clock frequency | SMCLK<br>Duty cycle = 50% ± 10% | | | $f_{SYSTEM}$ | | MHz |
| $t_{TA,cap}$ | Timer_A capture timing | TA0, TA1 | 3 V | 20 | | | ns |


Copyright © 2010–2013, Texas Instruments Incorporated

## USI, Universal Serial Interface

over recommended ranges of supply voltage and operating free-air temperature (unless otherwise noted)

| PARAMETER | | TEST CONDITIONS | $V_{CC}$ | MIN | TYP | MAX | UNIT |
|---|---|---|---|---|---|---|---|
| $f_{USI}$ | USI module clock frequency | External: SCLK, Duty cycle = 50% ± 10% | | | $f_{SYSTEM}$ | | MHz |
| $f_{(SCLK)}$ | Serial clock frequency, slave mode | SPI slave mode | 3 V | | | 6 | MHz |
| $V_{OL,I2C}$ | Low-level output voltage on SDA and SCL | USI module in I2C mode, $I_{(OLmax)}$ = 1.5 mA | 3 V | $V_{SS}$ | | $V_{SS}$ + 0.4 | V |

### Typical Characteristics – USI Low-Level Output Voltage on SDA and SCL

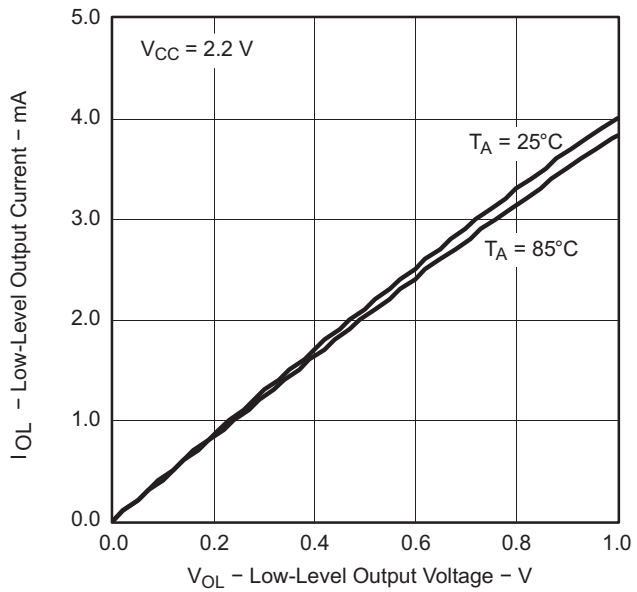


**Figure 16. USI Low-Level Output Voltage vs Output Current**

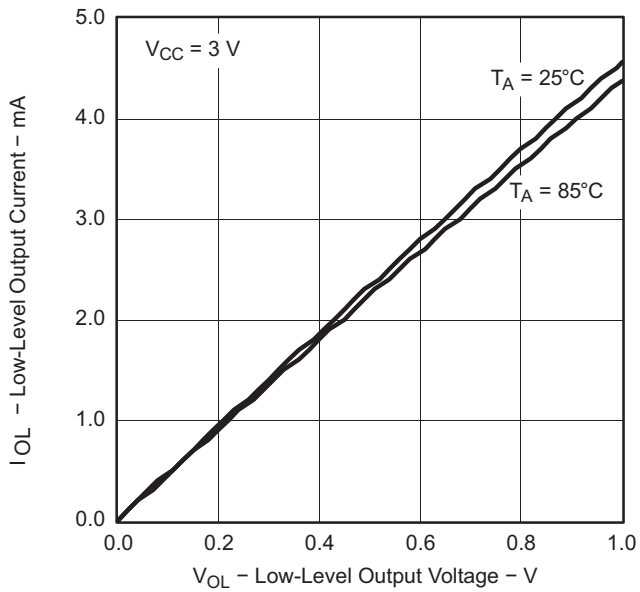


**Figure 17. USI Low-Level Output Voltage vs Output Current**

## 10-Bit ADC, Power Supply and Input Range Conditions (MSP430G2x32 Only)

over recommended ranges of supply voltage and operating free-air temperature (unless otherwise noted)[1]

| PARAMETER | | TEST CONDITIONS | $T_A$ | $V_{CC}$ | MIN | TYP | MAX | UNIT |
|---|---|---|---|---|---|---|---|---|
| $V_{CC}$ | Analog supply voltage | $V_{SS}$ = 0 V | | | 2.2 | | 3.6 | V |
| $V_{Ax}$ | Analog input voltage[2] | All Ax terminals, Analog inputs selected in ADC10AE register | | 3 V | 0 | | $V_{CC}$ | V |
| $I_{ADC10}$ | ADC10 supply current[3] | $f_{ADC10CLK}$ = 5.0 MHz, ADC10ON = 1, REFON = 0, ADC10SHT0 = 1, ADC10SHT1 = 0, ADC10DIV = 0 | 25°C | 3 V | | 0.6 | | mA |
| $I_{REF+}$ | Reference supply current, reference buffer disabled[4] | $f_{ADC10CLK}$ = 5.0 MHz, ADC10ON = 0, REF2_5V = 0, REFON = 1, REFOUT = 0 | 25°C | 3 V | | 0.25 | | mA |
| | | $f_{ADC10CLK}$ = 5.0 MHz, ADC10ON = 0, REF2_5V = 1, REFON = 1, REFOUT = 0 | | | | 0.25 | | |
| $I_{REFB,0}$ | Reference buffer supply current with ADC10SR = 0[4] | $f_{ADC10CLK}$ = 5.0 MHz, ADC10ON = 0, REFON = 1, REF2_5V = 0, REFOUT = 1, ADC10SR = 0 | 25°C | 3 V | | 1.1 | | mA |
| $I_{REFB,1}$ | Reference buffer supply current with ADC10SR = 1[4] | $f_{ADC10CLK}$ = 5.0 MHz, ADC10ON = 0, REFON = 1, REF2_5V = 0, REFOUT = 1, ADC10SR = 1 | 25°C | 3 V | | 0.5 | | mA |
| $C_I$ | Input capacitance | Only one terminal Ax can be selected at one time | 25°C | 3 V | | | 27 | pF |
| $R_I$ | Input MUX ON resistance | 0 V ≤ $V_{Ax}$ ≤ $V_{CC}$ | 25°C | 3 V | | 1000 | | Ω |

(1) The leakage current is defined in the leakage current table with Px.x/Ax parameter.
(2) The analog input voltage range must be within the selected reference voltage range $V_{R+}$ to $V_{R-}$ for valid conversion results.
(3) The internal reference supply current is not included in current consumption parameter $I_{ADC10}$.
(4) The internal reference current is supplied via terminal $V_{CC}$. Consumption is independent of the ADC10ON control bit, unless a conversion is active. The REFON bit enables the built-in reference to settle before starting an A/D conversion.


Copyright © 2010–2013, Texas Instruments Incorporated

## 10-Bit ADC, Built-In Voltage Reference (MSP430G2x32 Only)

over recommended ranges of supply voltage and operating free-air temperature (unless otherwise noted)

| PARAMETER | | TEST CONDITIONS | $V_{CC}$ | MIN | TYP | MAX | UNIT |
|---|---|---|---|---|---|---|---|
| $V_{CC,REF+}$ | Positive built-in reference analog supply voltage range | $I_{VREF+}$ ≤ 1 mA, REF2_5V = 0 | | 2.2 | | | V |
| | | $I_{VREF+}$ ≤ 1 mA, REF2_5V = 1 | | 2.9 | | | |
| $V_{REF+}$ | Positive built-in reference voltage | $I_{VREF+}$ ≤ $I_{VREF+}$max, REF2_5V = 0 | 3 V | 1.41 | 1.5 | 1.59 | V |
| | | $I_{VREF+}$ ≤ $I_{VREF+}$max, REF2_5V = 1 | | 2.35 | 2.5 | 2.65 | |
| $I_{LD,VREF+}$ | Maximum VREF+ load current | | 3 V | | | ±1 | mA |
| | VREF+ load regulation | $I_{VREF+}$ = 500 µA ± 100 µA, Analog input voltage $V_{Ax}$ ≈ 0.75 V, REF2_5V = 0 | 3 V | | | ±2 | LSB |
| | | $I_{VREF+}$ = 500 µA ± 100 µA, Analog input voltage $V_{Ax}$ ≈ 1.25 V, REF2_5V = 1 | | | | ±2 | |
| | $V_{REF+}$ load regulation response time | $I_{VREF+}$ = 100 µA→900 µA, $V_{Ax}$ ≈ 0.5 × VREF+, Error of conversion result ≤ 1 LSB, ADC10SR = 0 | 3 V | | | 400 | ns |
| $C_{VREF+}$ | Maximum capacitance at pin VREF+ | $I_{VREF+}$ ≤ ±1 mA, REFON = 1, REFOUT = 1 | 3 V | | | 100 | pF |
| $TC_{REF+}$ | Temperature coefficient (1) | $I_{VREF+}$ = const with 0 mA ≤ $I_{VREF+}$ ≤ 1 mA | 3 V | | | ±100 | ppm/°C |
| $t_{REFON}$ | Settling time of internal reference voltage to 99.9% VREF | $I_{VREF+}$ = 0.5 mA, REF2_5V = 0, REFON = 0 → 1 | 3.6 V | | | 30 | µs |
| $t_{REFBURST}$ | Settling time of reference buffer to 99.9% VREF | $I_{VREF+}$ = 0.5 mA, REF2_5V = 1, REFON = 1, REFBURST = 1, ADC10SR = 0 | 3 V | | | 2 | µs |

(1) Calculated using the box method: (MAX(-40 to 85°C) – MIN(-40 to 85°C)) / MIN(-40 to 85°C) / (85°C – (–40°C))

Copyright © 2010–2013, Texas Instruments Incorporated

## 10-Bit ADC, External Reference[1] (MSP430G2x32 Only)

over recommended ranges of supply voltage and operating free-air temperature (unless otherwise noted)

| PARAMETER | | TEST CONDITIONS | $V_{CC}$ | MIN | TYP | MAX | UNIT |
|---|---|---|---|---|---|---|---|
| VEREF+ | Positive external reference input voltage range[2] | VEREF+ > VEREF–, SREF1 = 1, SREF0 = 0 | | 1.4 | | $V_{CC}$ | V |
| | | VEREF– ≤ VEREF+ ≤ $V_{CC}$ – 0.15 V, SREF1 = 1, SREF0 = 1 [3] | | 1.4 | | 3 | |
| VEREF– | Negative external reference input voltage range[4] | VEREF+ > VEREF– | | 0 | | 1.2 | V |
| ΔVEREF | Differential external reference input voltage range, ΔVEREF = VEREF+ – VEREF– | VEREF+ > VEREF– [5] | | 1.4 | | $V_{CC}$ | V |
| $I_{VEREF+}$ | Static input current into VEREF+ | 0 V ≤ VEREF+ ≤ $V_{CC}$, SREF1 = 1, SREF0 = 0 | 3 V | | ±1 | | µA |
| | | 0 V ≤ VEREF+ ≤ $V_{CC}$ – 0.15 V ≤ 3 V, SREF1 = 1, SREF0 = 1[3] | | | 0 | | |
| $I_{VEREF–}$ | Static input current into VEREF– | 0 V ≤ VEREF– ≤ $V_{CC}$ | 3 V | | ±1 | | µA |

(1) The external reference is used during conversion to charge and discharge the capacitance array. The input capacitance, $C_I$, is also the dynamic load for an external reference during conversion. The dynamic impedance of the reference supply should follow the recommendations on analog-source impedance to allow the charge to settle for 10-bit accuracy.
(2) The accuracy limits the minimum positive external reference voltage. Lower reference voltage levels may be applied with reduced accuracy requirements.
(3) Under this condition the external reference is internally buffered. The reference buffer is active and requires the reference buffer supply current $I_{REFB}$. The current consumption can be limited to the sample and conversion period with REBURST = 1.
(4) The accuracy limits the maximum negative external reference voltage. Higher reference voltage levels may be applied with reduced accuracy requirements.
(5) The accuracy limits the minimum external differential reference voltage. Lower differential reference voltage levels may be applied with reduced accuracy requirements.

## 10-Bit ADC, Timing Parameters (MSP430G2x32 Only)

over recommended ranges of supply voltage and operating free-air temperature (unless otherwise noted)

| PARAMETER | | TEST CONDITIONS | | $V_{CC}$ | MIN | TYP | MAX | UNIT |
|---|---|---|---|---|---|---|---|---|
| $f_{ADC10CLK}$ | ADC10 input clock frequency | For specified performance of ADC10 linearity parameters | ADC10SR = 0 | 3 V | 0.45 | | 6.3 | MHz |
| | | | ADC10SR = 1 | | 0.45 | | 1.5 | |
| $f_{ADC10OSC}$ | ADC10 built-in oscillator frequency | ADC10DIVx = 0, ADC10SSELx = 0, $f_{ADC10CLK}$ = $f_{ADC10OSC}$ | | 3 V | 3.7 | | 6.3 | MHz |
| $t_{CONVERT}$ | Conversion time | ADC10 built-in oscillator, ADC10SSELx = 0, $f_{ADC10CLK}$ = $f_{ADC10OSC}$ | | 3 V | 2.06 | | 3.51 | µs |
| | | $f_{ADC10CLK}$ from ACLK, MCLK, or SMCLK: ADC10SSELx ≠ 0 | | | 13 × ADC10DIV × 1/$f_{ADC10CLK}$ | | | |
| $t_{ADC10ON}$ | Turn-on settling time of the ADC | [1] | | | | | 100 | ns |

(1) The condition is that the error in a conversion started after $t_{ADC10ON}$ is less than ±0.5 LSB. The reference and input signal are already settled.

## 10-Bit ADC, Linearity Parameters (MSP430G2x32 Only)

over recommended ranges of supply voltage and operating free-air temperature (unless otherwise noted)

| PARAMETER | | TEST CONDITIONS | $V_{CC}$ | MIN | TYP | MAX | UNIT |
|---|---|---|---|---|---|---|---|
| $E_I$ | Integral linearity error | | 3 V | | | ±1 | LSB |
| $E_D$ | Differential linearity error | | 3 V | | | ±1 | LSB |
| $E_O$ | Offset error | Source impedance $R_S$ < 100 Ω | 3 V | | | ±1 | LSB |
| $E_G$ | Gain error | | 3 V | | ±1.1 | ±2 | LSB |
| $E_T$ | Total unadjusted error | | 3 V | | ±2 | ±5 | LSB |


Copyright © 2010–2013, Texas Instruments Incorporated

## 10-Bit ADC, Temperature Sensor and Built-In $V_{MID}$ (MSP430G2x32 Only)

over recommended ranges of supply voltage and operating free-air temperature (unless otherwise noted)

| PARAMETER | | TEST CONDITIONS | $V_{CC}$ | MIN | TYP | MAX | UNIT |
|---|---|---|---|---|---|---|---|
| $I_{SENSOR}$ | Temperature sensor supply current (1) | REFON = 0, INCHx = 0Ah, $T_A$ = 25°C | 3 V | | 60 | | µA |
| $TC_{SENSOR}$ | | ADC10ON = 1, INCHx = 0Ah (2) | 3 V | | 3.55 | | mV/°C |
| $t_{Sensor(sample)}$ | Sample time required if channel 10 is selected (3) | ADC10ON = 1, INCHx = 0Ah, Error of conversion result ≤ 1 LSB | 3 V | 30 | | | µs |
| $I_{VMID}$ | Current into divider at channel 11 | ADC10ON = 1, INCHx = 0Bh | 3 V | | | (4) | µA |
| $V_{MID}$ | $V_{CC}$ divider at channel 11 | ADC10ON = 1, INCHx = 0Bh, $V_{MID} \approx 0.5 \times V_{CC}$ | 3 V | | 1.5 | | V |
| $t_{VMID(sample)}$ | Sample time required if channel 11 is selected (5) | ADC10ON = 1, INCHx = 0Bh, Error of conversion result ≤ 1 LSB | 3 V | 1220 | | | ns |

(1) The sensor current $I_{SENSOR}$ is consumed if (ADC10ON = 1 and REFON = 1) or (ADC10ON = 1 and INCH = 0Ah and sample signal is high). When REFON = 1, $I_{SENSOR}$ is included in $I_{REF+}$. When REFON = 0, $I_{SENSOR}$ applies during conversion of the temperature sensor input (INCH = 0Ah).
(2) The following formula can be used to calculate the temperature sensor output voltage:
$V_{Sensor,typ} = TC_{Sensor}$ (273 + T [°C] ) + $V_{Offset,sensor}$ [mV] or
$V_{Sensor,typ} = TC_{Sensor}$ T [°C] + $V_{Sensor}(T_A = 0°C)$ [mV]
(3) The typical equivalent impedance of the sensor is 51 kΩ. The sample time required includes the sensor-on time $t_{SENSOR(on)}$.
(4) No additional current is needed. The $V_{MID}$ is used during sampling.
(5) The on-time $t_{VMID(on)}$ is included in the sampling time $t_{VMID(sample)}$; no additional on time is needed.

## Flash Memory

over recommended ranges of supply voltage and operating free-air temperature (unless otherwise noted)

| PARAMETER | | TEST CONDITIONS | $V_{CC}$ | MIN | TYP | MAX | UNIT |
|---|---|---|---|---|---|---|---|
| $V_{CC(PGM/ERASE)}$ | Program and erase supply voltage | | | 2.2 | | 3.6 | V |
| $f_{FTG}$ | Flash timing generator frequency | | | 257 | | 476 | kHz |
| $I_{PGM}$ | Supply current from $V_{CC}$ during program | | 2.2 V, 3.6 V | | 1 | 5 | mA |
| $I_{ERASE}$ | Supply current from $V_{CC}$ during erase | | 2.2 V, 3.6 V | | 1 | 7 | mA |
| $t_{CPT}$ | Cumulative program time (1) | | 2.2 V, 3.6 V | | | 10 | ms |
| $t_{CMErase}$ | Cumulative mass erase time | | 2.2 V, 3.6 V | 20 | | | ms |
| | Program and erase endurance | | | $10^4$ | $10^5$ | | cycles |
| $t_{Retention}$ | Data retention duration | $T_J$ = 25°C | | 100 | | | years |
| $t_{Word}$ | Word or byte program time | (2) | | | 30 | | $t_{FTG}$ |
| $t_{Block, 0}$ | Block program time for first byte or word | (2) | | | 25 | | $t_{FTG}$ |
| $t_{Block, 1-63}$ | Block program time for each additional byte or word | (2) | | | 18 | | $t_{FTG}$ |
| $t_{Block, End}$ | Block program end-sequence wait time | (2) | | | 6 | | $t_{FTG}$ |
| $t_{Mass\ Erase}$ | Mass erase time | (2) | | | 10593 | | $t_{FTG}$ |
| $t_{Seg\ Erase}$ | Segment erase time | (2) | | | 4819 | | $t_{FTG}$ |

(1) The cumulative program time must not be exceeded when writing to a 64-byte flash block. This parameter applies to all programming methods: individual word or byte write mode and block write mode.
(2) These values are hardwired into the flash controller's state machine ($t_{FTG} = 1/f_{FTG}$).

Copyright © 2010–2013, Texas Instruments Incorporated

## RAM

over recommended ranges of supply voltage and operating free-air temperature (unless otherwise noted)

| PARAMETER | | TEST CONDITIONS | MIN | MAX | UNIT |
|---|---|---|---|---|---|
| $V_{(RAMh)}$ | RAM retention supply voltage [1] | CPU halted | 1.6 | | V |

(1) This parameter defines the minimum supply voltage $V_{CC}$ when the data in RAM remains unchanged. No program execution should happen during this supply voltage condition.

## JTAG and Spy-Bi-Wire Interface

over recommended ranges of supply voltage and operating free-air temperature (unless otherwise noted)

| PARAMETER | | TEST CONDITIONS | $V_{CC}$ | MIN | TYP | MAX | UNIT |
|---|---|---|---|---|---|---|---|
| $f_{SBW}$ | Spy-Bi-Wire input frequency | | 2.2 V | 0 | | 20 | MHz |
| $t_{SBW,Low}$ | Spy-Bi-Wire low clock pulse length | | 2.2 V | 0.025 | | 15 | µs |
| $t_{SBW,En}$ | Spy-Bi-Wire enable time (TEST high to acceptance of first clock edge[1]) | | 2.2 V | | | 1 | µs |
| $t_{SBW,Ret}$ | Spy-Bi-Wire return to normal operation time | | 2.2 V | 15 | | 100 | µs |
| $f_{TCK}$ | TCK input frequency[2] | | 2.2 V | 0 | | 5 | MHz |
| $R_{Internal}$ | Internal pulldown resistance on TEST | | 2.2 V | 25 | 60 | 90 | kΩ |

(1) Tools accessing the Spy-Bi-Wire interface need to wait for the maximum $t_{SBW,En}$ time after pulling the TEST/SBWCLK pin high before applying the first SBWCLK clock edge.
(2) $f_{TCK}$ may be restricted to meet the timing requirements of the module selected.

## JTAG Fuse[1]

over recommended ranges of supply voltage and operating free-air temperature (unless otherwise noted)

| PARAMETER | | TEST CONDITIONS | MIN | MAX | UNIT |
|---|---|---|---|---|---|
| $V_{CC(FB)}$ | Supply voltage during fuse-blow condition | $T_A$ = 25°C | 2.5 | | V |
| $V_{FB}$ | Voltage level on TEST for fuse blow | | 6 | 7 | V |
| $I_{FB}$ | Supply current into TEST during fuse blow | | | 100 | mA |
| $t_{FB}$ | Time to blow fuse | | | 1 | ms |

(1) Once the fuse is blown, no further access to the JTAG/Test, Spy-Bi-Wire, and emulation feature is possible, and JTAG is switched to bypass mode.


Copyright © 2010–2013, Texas Instruments Incorporated

## PIN SCHEMATICS

### Port P1 Pin Schematic: P1.0 to P1.2, Input/Output With Schmitt Trigger

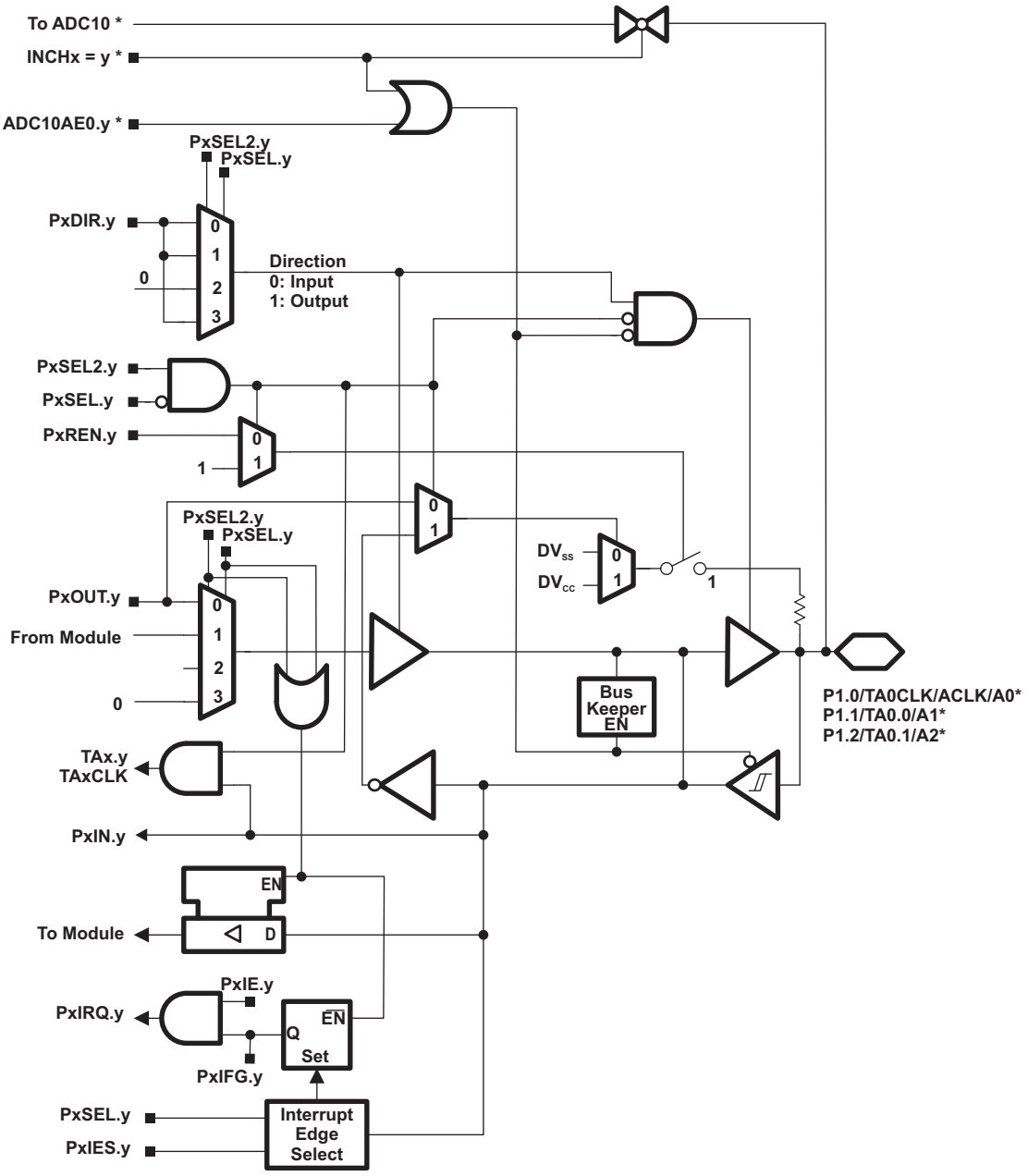


* Note: MSP430G2x32 devices only. MSP430G2x02 devices have no ADC10.

## Table 14. Port P1 (P1.0 to P1.2) Pin Functions

| PIN NAME (P1.x) | x | FUNCTION | CONTROL BITS / SIGNALS[1] | | | |
|---|---|---|---|---|---|---|
| | | | P1DIR.x | P1SEL.x | P1SEL2.x | ADC10AE.x (INCH.y=1)[2] |
| P1.0/ | 0 | P1.x (I/O) | I: 0; O: 1 | 0 | 0 | 0 |
| TA0CLK/ | | TA0.TACLK | 0 | 1 | 0 | 0 |
| ACLK/ | | ACLK | 1 | 1 | 0 | 0 |
| A0[2]/ | | A0 | X | X | X | 1 (y = 0) |
| Pin Osc | | Capacitive sensing | x | 0 | 1 | 0 |
| P1.1/ | 1 | P1.x (I/O) | I: 0; O: 1 | 0 | 0 | 0 |
| TA0.0/ | | TA0.0 | 1 | 1 | 0 | 0 |
| | | TA0.CCI0A | 0 | 1 | 0 | 0 |
| A1[2]/ | | A1 | X | X | X | 1 (y = 1) |
| Pin Osc | | Capacitive sensing | X | 0 | 1 | 0 |
| P1.2/ | 2 | P1.x (I/O) | I: 0; O: 1 | 0 | 0 | 0 |
| TA0.1/ | | TA0.1 | 1 | 1 | 0 | 0 |
| | | TA0.CCI1A | 0 | 1 | 0 | 0 |
| A2[2]/ | | A2 | X | X | X | 1 (y = 2) |
| Pin Osc | | Capacitive sensing | X | 0 | 1 | 0 |

(1) X = don't care
(2) MSP430G2x32 devices only


Copyright © 2010–2013, Texas Instruments Incorporated

## Port P1 Pin Schematic: P1.3, Input/Output With Schmitt Trigger

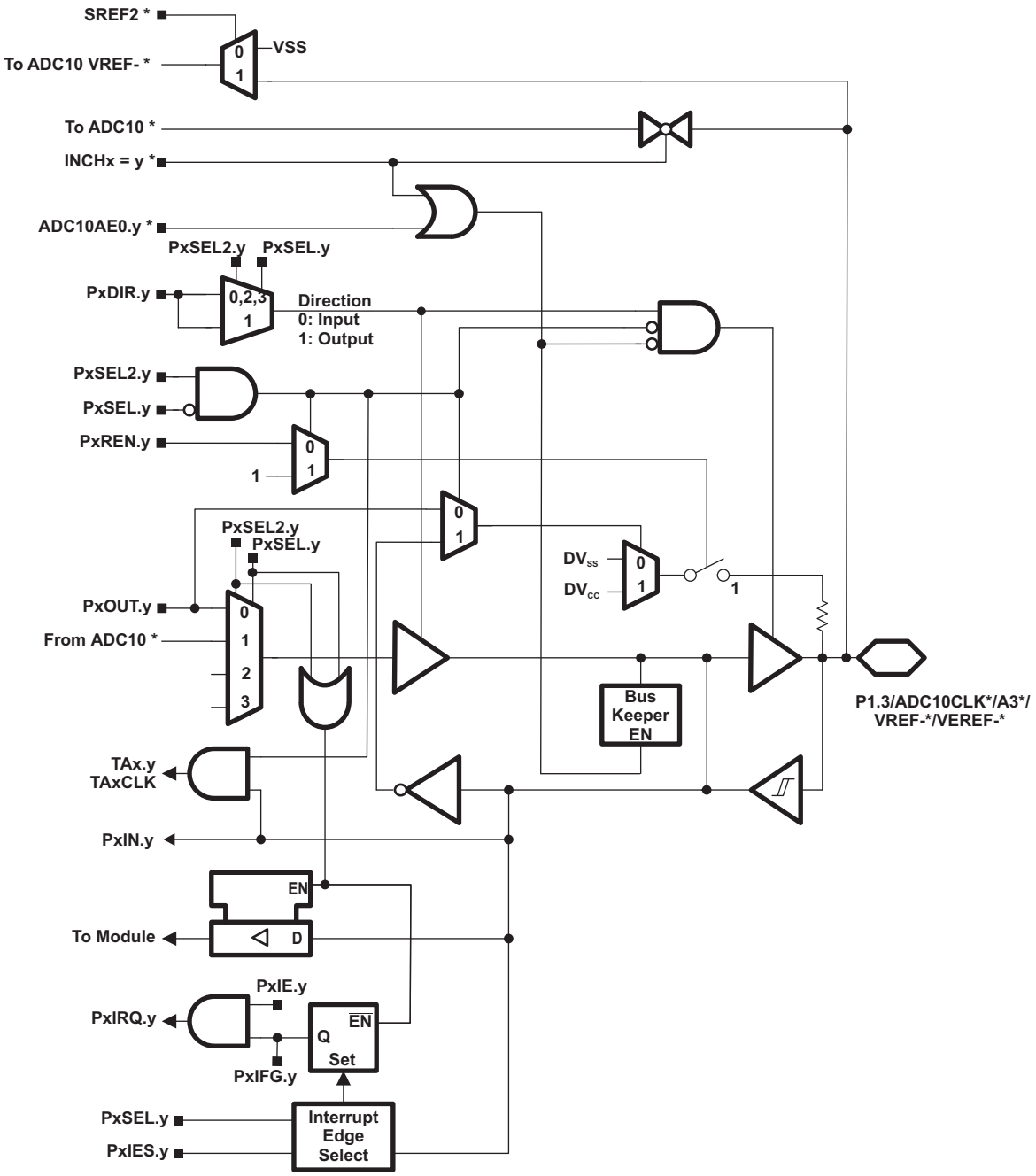


*** Note: MSP430G2x32 devices only. MSP430G2x02 devices have no ADC10.**

## Table 15. Port P1 (P1.3) Pin Functions

| PIN NAME (P1.x) | x | FUNCTION | CONTROL BITS / SIGNALS[1] | | | |
|---|---|---|---|---|---|---|
| | | | P1DIR.x | P1SEL.x | P1SEL2.x | ADC10AE.x (INCH.x=1)[2] |
| P1.3/ | 3 | P1.x (I/O) | I: 0; O: 1 | 0 | 0 | 0 |
| ADC10CLK[2]/ | | ADC10CLK | 1 | 1 | 0 | 0 |
| A3[2]/ | | A3 | X | X | X | 1 (y = 3) |
| VREF-[2]/ | | VREF- | X | X | X | 1 |
| VEREF-[2]/ | | VEREF- | X | X | X | 1 |
| Pin Osc | | Capacitive sensing | X | 0 | 1 | 0 |

(1) X = don't care
(2) MSP430G2x32 devices only


Copyright © 2010–2013, Texas Instruments Incorporated

## Port P1 Pin Schematic: P1.4, Input/Output With Schmitt Trigger

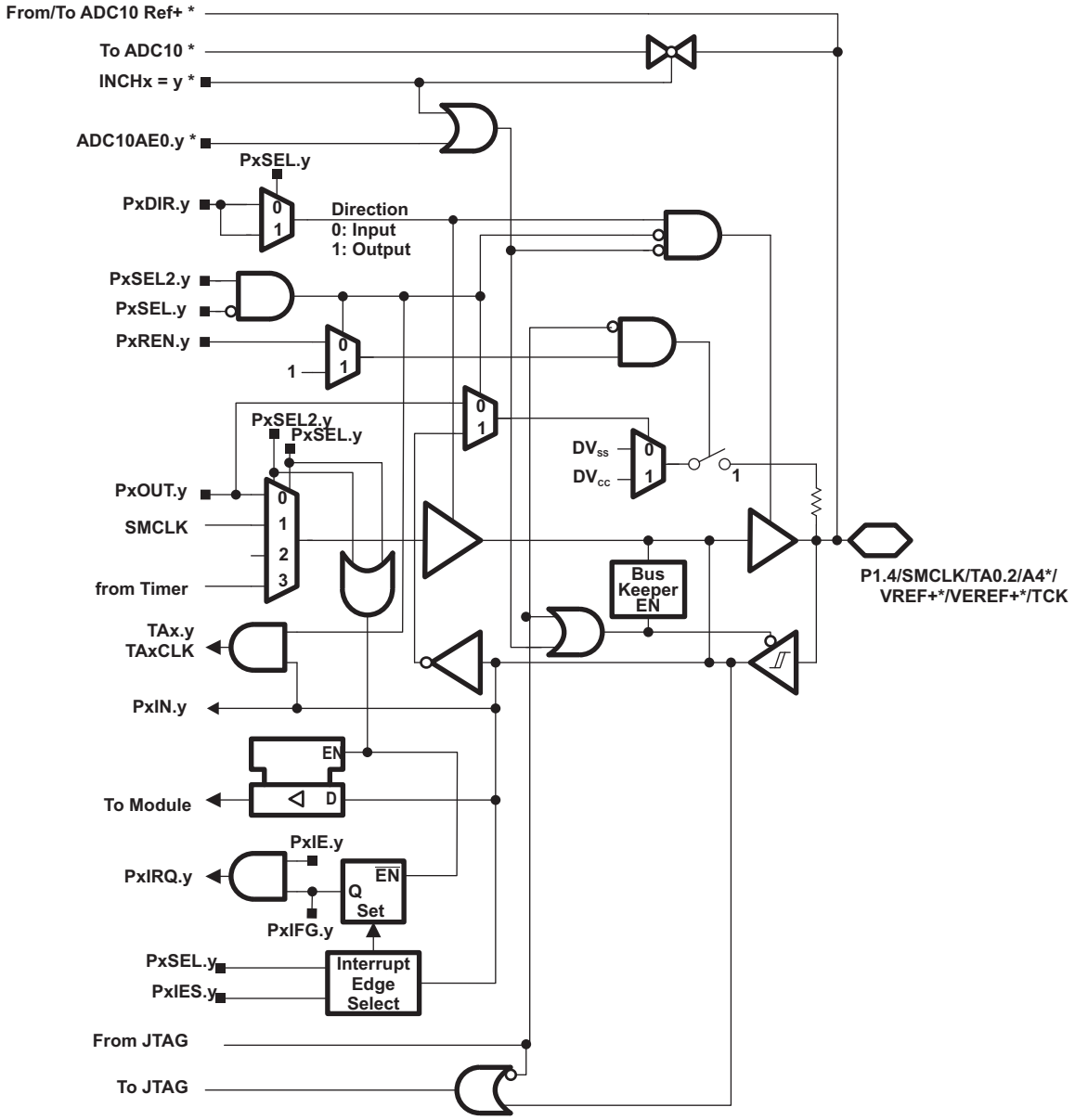


* Note: MSP430G2x32 devices only. MSP430G2x02 devices have no ADC10.

## Table 16. Port P1 (P1.4) Pin Functions

| PIN NAME (P1.x) | x | FUNCTION | CONTROL BITS / SIGNALS[1] | | | | |
|---|---|---|---|---|---|---|---|
| | | | P1DIR.x | P1SEL.x | P1SEL2.x | ADC10AE.x (INCH.x=1)[2] | JTAG Mode |
| P1.4/ | 4 | P1.x (I/O) | I: 0; O: 1 | 0 | 0 | 0 | 0 |
| SMCLK/ | | SMCLK | 1 | 1 | 0 | 0 | 0 |
| TA0.2/ | | TA0.2 | 1 | 1 | 1 | 0 | 0 |
| | | TA0.CCI2A | 0 | 1 | 1 | 0 | 0 |
| VREF+[2]/ | | VREF+ | X | X | X | 1 | 0 |
| VEREF+[2]/ | | VEREF+ | X | X | X | 1 | 0 |
| A4[2]/ | | A4 | X | X | X | 1 (y = 4) | 0 |
| TCK/ | | TCK | X | X | X | 0 | 1 |
| Pin Osc | | Capacitive sensing | X | 0 | 1 | 0 | 0 |

(1) X = don't care
(2) MSP430G2x32 devices only


Copyright © 2010–2013, Texas Instruments Incorporated

## Port P1 Pin Schematic: P1.5 to P1.7, Input/Output With Schmitt Trigger

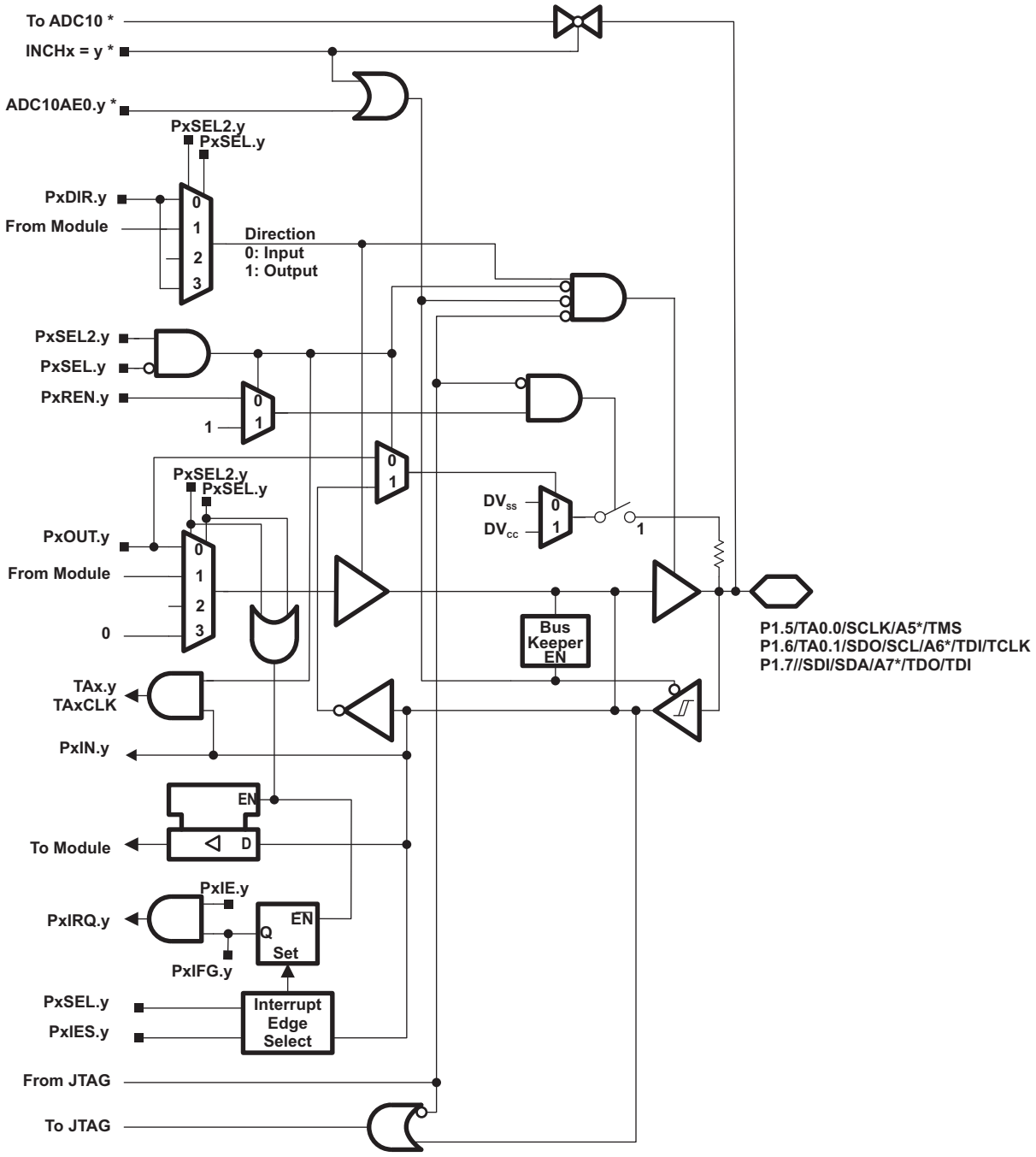


* Note: MSP430G2x32 devices only. MSP430G2x02 devices have no ADC10.

## Table 17. Port P1 (P1.5 to P1.7) Pin Functions

| PIN NAME (P1.x) | x | FUNCTION | CONTROL BITS / SIGNALS[1] | | | | | |
|---|---|---|---|---|---|---|---|---|
| | | | P1DIR.x | P1SEL.x | P1SEL2.x | USIP.x | JTAG Mode | ADC10AE.x (INCH.x=1)[2] |
| P1.5/ | 5 | P1.x (I/O) | I: 0; O: 1 | 0 | 0 | 0 | 0 | 0 |
| TA0.0/ | | TA0.0 | 1 | 1 | 0 | 0 | 0 | 0 |
| SCLK/ | | SPI mode | from USI | 1 | 0 | 1 | 0 | 0 |
| A5[2]/ | | A5 | X | X | X | 0 | 0 | 1 (y = 5) |
| TMS/ | | TMS | X | X | X | 0 | 1 | 0 |
| Pin Osc | | Capacitive sensing | X | 0 | 1 | 0 | 0 | 0 |
| P1.6/ | 6 | P1.x (I/O) | I: 0; O: 1 | 0 | 0 | 0 | 0 | 0 |
| TA0.1/ | | TA0.1 | 1 | 1 | 0 | 0 | 0 | 0 |
| SDO/ | | SPI mode | from USI | 1 | 0 | ! | 0 | 0 |
| SCL/ | | I2C mode | from USI | 1 | 0 | ! | 0 | 0 |
| A6[2]/ | | A6 | X | X | X | 0 | 0 | 1 (y = 6) |
| TDI/TCLK/ | | TDI/TCLK | X | X | X | 0 | 1 | 0 |
| Pin Osc | | Capacitive sensing | X | 0 | 1 | 0 | 0 | 0 |
| P1.7/ | 7 | P1.x (I/O) | I: 0; O: 1 | 0 | 0 | 0 | 0 | 0 |
| SDI/ | | SPI mode | from USI | 1 | 0 | 1 | 0 | 0 |
| SDA/ | | SPI mode | from USI | 1 | 0 | 1 | 0 | 0 |
| A7[2]/ | | A7 | X | X | X | 0 | 0 | 1 (y = 7) |
| TDO/TDI/ | | TDO/TDI | X | X | X | 0 | 1 | 0 |
| Pin Osc | | Capacitive sensing | X | 0 | 1 | 0 | 0 | 0 |

(1) X = don't care
(2) MSP430G2x32 devices only


Copyright © 2010–2013, Texas Instruments Incorporated

## Port P2 Pin Schematic: P2.0 to P2.5, Input/Output With Schmitt Trigger

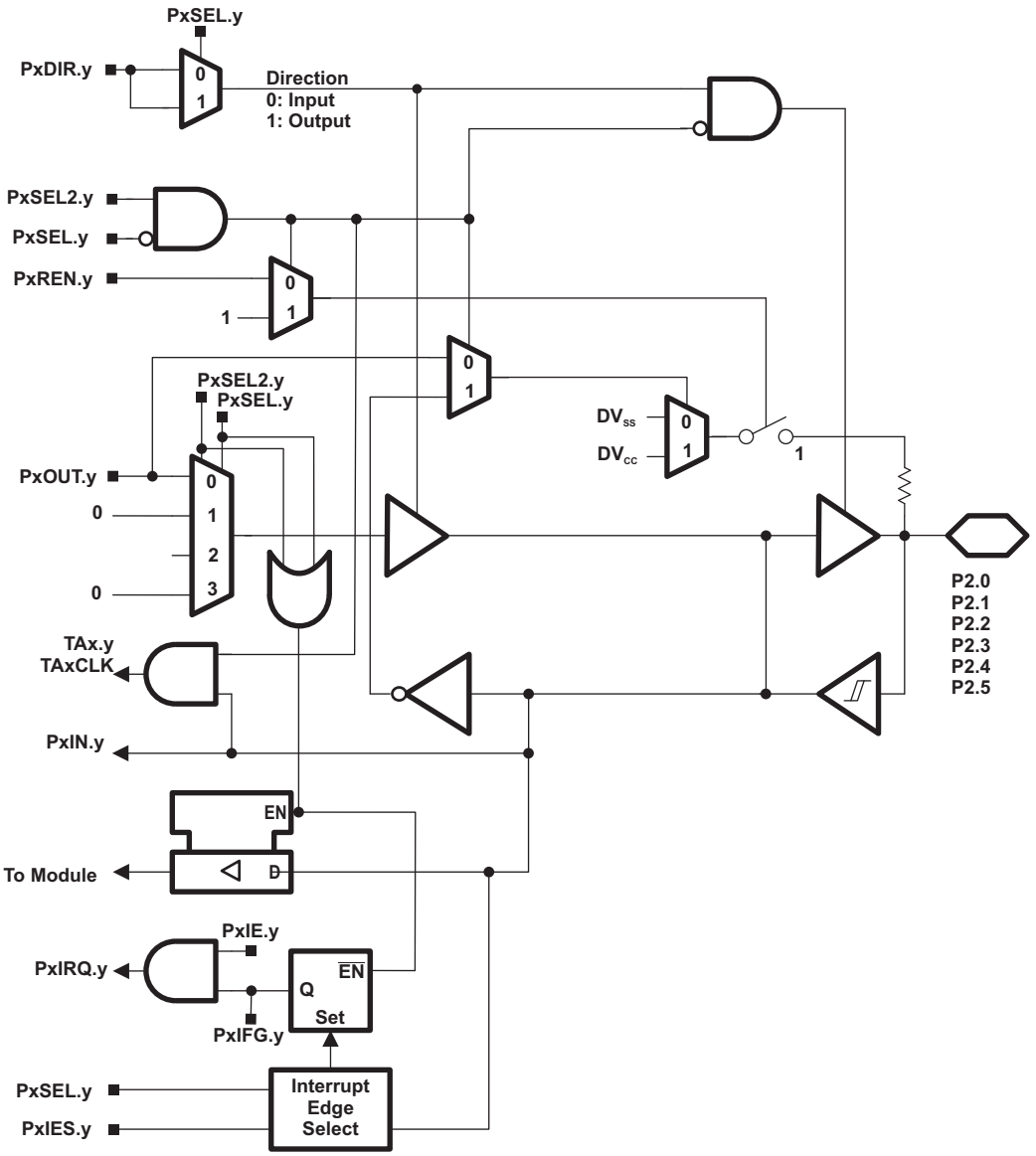

## Table 18. Port P2 (P2.0 to P2.5) Pin Functions

| PIN NAME (P2.x) | x | FUNCTION | CONTROL BITS / SIGNALS[1] | | |
|---|---|---|---|---|---|
| | | | P2DIR.x | P2SEL.x | P2SEL2.x |
| P2.0/ | 0 | P2.x (I/O) | I: 0; O: 1 | 0 | 0 |
| Pin Osc | | Capacitive sensing | X | 0 | 1 |
| P2.1/ | 1 | P2.x (I/O) | I: 0; O: 1 | 0 | 0 |
| Pin Osc | | Capacitive sensing | X | 0 | 1 |
| P2.2/ | 2 | P2.x (I/O) | I: 0; O: 1 | 0 | 0 |
| Pin Osc | | Capacitive sensing | X | 0 | 1 |
| P2.3/ | 3 | P2.x (I/O) | I: 0; O: 1 | 0 | 0 |
| Pin Osc | | Capacitive sensing | X | 0 | 1 |
| P2.4/ | 4 | P2.x (I/O) | I: 0; O: 1 | 0 | 0 |
| Pin Osc | | Capacitive sensing | X | 0 | 1 |
| P2.5/ | 5 | P2.x (I/O) | I: 0; O: 1 | 0 | 0 |
| Pin Osc | | Capacitive sensing | X | 0 | 1 |

(1) X = don't care


Copyright © 2010–2013, Texas Instruments Incorporated

## Port P2 Pin Schematic: P2.6, Input/Output With Schmitt Trigger

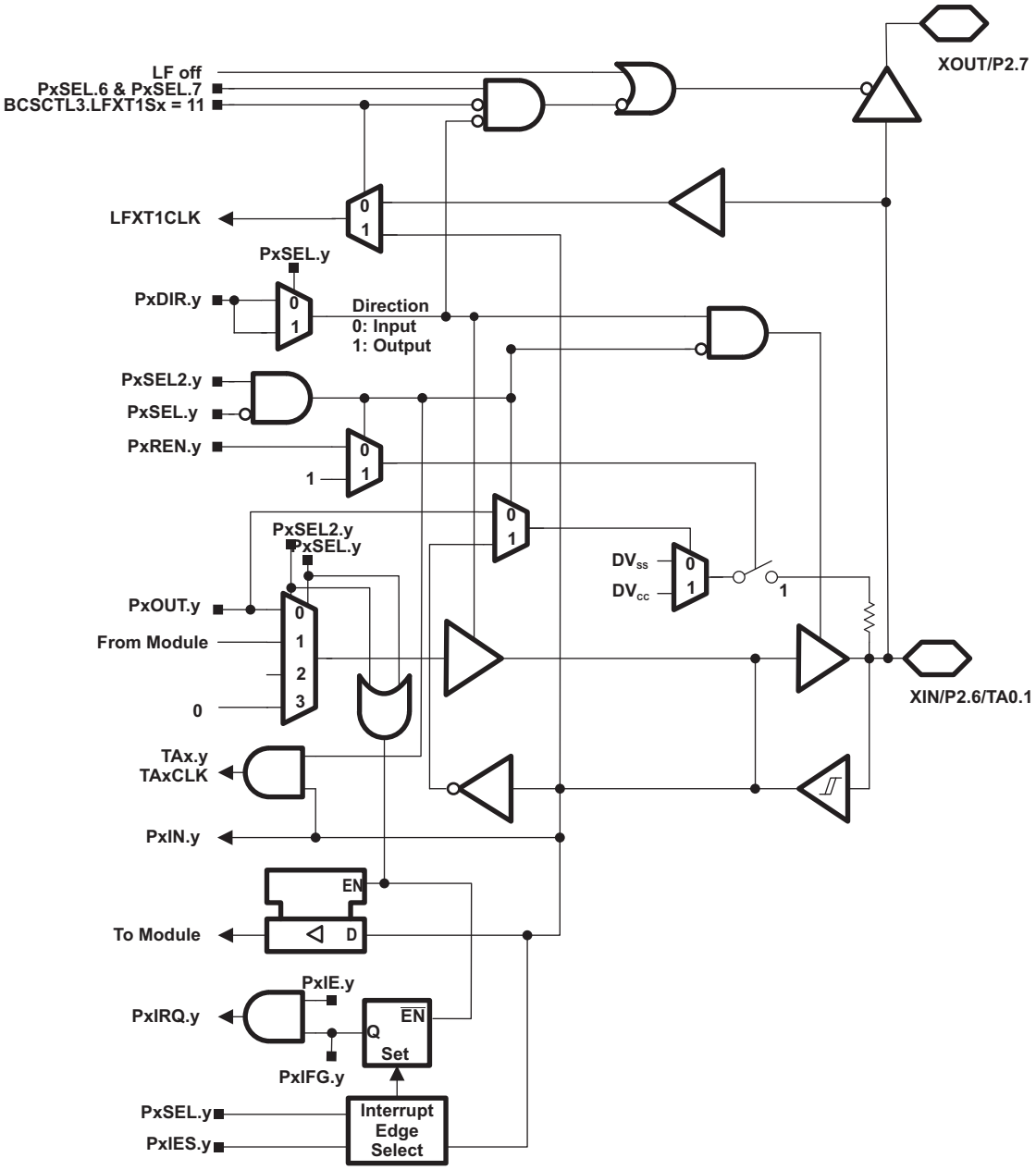


### Table 19. Port P2 (P2.6) Pin Functions

| PIN NAME (P2.x) | x | FUNCTION | CONTROL BITS / SIGNALS(1) | | |
|---|---|---|---|---|---|
| | | | P2DIR.x | P2SEL.6<br>P2SEL.7 | P2SEL2.6<br>P2SEL2.7 |
| XIN/ | 6 | XIN | 0 | 1<br>1 | 0<br>0 |
| P2.6/ | | P2.x (I/O) | I: 0; O: 1 | 0<br>X | 0<br>0 |
| TA0.1/ | | Timer0_A3.TA1 | 1 | 1<br>0 | 0<br>0 |
| Pin Osc | | Capacitive sensing | X | 0<br>X | 1<br>X |

(1) X = don't care

## Port P2 Pin Schematic: P2.7, Input/Output With Schmitt Trigger

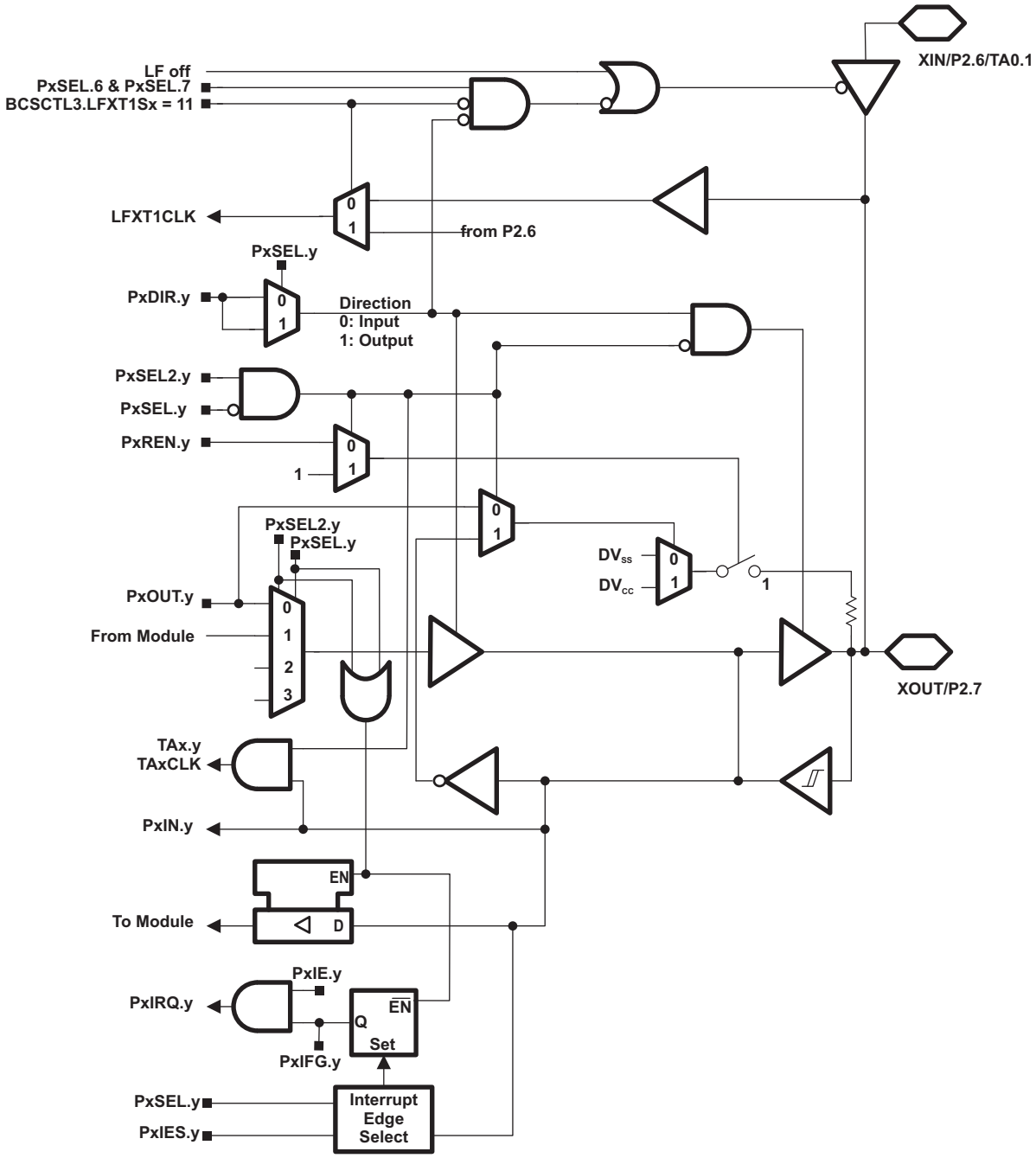


### Table 20. Port P2 (P2.7) Pin Functions

| PIN NAME (P2.x) | x | FUNCTION | CONTROL BITS / SIGNALS[1] | | |
|---|---|---|---|---|---|
| | | | P2DIR.x | P2SEL.6<br>P2SEL.7 | P2SEL2.6<br>P2SEL2.7 |
| XOUT/ | 7 | XOUT | X | 1<br>1 | 0<br>0 |
| P2.7/ | | P2.x (I/O) | I: 0; O: 1 | X<br>0 | 0<br>0 |
| Pin Osc | | Capacitive sensing | X | X<br>0 | X<br>1 |

(1) X = don't care


Copyright © 2010–2013, Texas Instruments Incorporated

## REVISION HISTORY

| REVISION | DESCRIPTION |
|---|---|
| SLAS723 | Initial release |
| SLAS723A | Page 1, Changed *Internal Frequencies up to 16 MHz With* ***One Calibrated Frequency*** to ***Four Calibrated Frequencies*** |
| SLAS723B | Added note concerning pulldown resistor to PW14 and RSA16 pinout drawings.<br>Removed reference to CAOUT from N20, PW20 pinout drawing and Table 11 (there is no comparator module on this device).<br>Added "N20, PW20" to Input Pin Number and Output Pin Number columns in Table 11.<br>Corrected pin numbers for P1.0 to P1.3 for PW14 package in Table 2. |
| SLAS723C | Corrected N20,PW20 Output Pin Number for TA0.0 in Table 11.<br>Changed Storage temperature range limit in Absolute Maximum Ratings.<br>Removed CAPD.y column from Table 16.<br>Corrected Control Bits/Signals in Table 20.<br>Corrected SDA pin name in Table 17. |
| SLAS723D | Changed TAG_ADC10_1 value to 0x10 in Table 9.<br>Added P1.6 output row for TA0.1 module output signal TA1 in Table 11.<br>Changed Tstg, Programmed device, to -55°C to 150°C in Absolute Maximum Ratings. |
| SLAS723E | Changed all port schematics (added buffer after PxOUT.y mux) in Pin Schematics. |
| SLAS723F | Corrected signal names on pin 7 or "N OR PW PACKAGE" (20 pin) in Device Pinouts.<br>Corrected pin number for P2.6 under Ouptput Pin Number, PW14 column in Table 11.<br>Added note for $TC_{REF+}$ in 10-Bit ADC, Built-In Voltage Reference (MSP430G2x32 Only). |
| SLAS723G | Recommended Operating Conditions, Added test conditions for typical values.<br>Pin-Oscillator Frequency – Ports Px, Corrected resistor value in note (1).<br>POR, BOR, Added note (2). |
| SLAS723H | Throughout, Changed all variations of touch sense(1) to capacitive touch. |

(1) TouchSense is a trademark of Immersion Corporation.

Copyright © 2010–2013, Texas Instruments Incorporated

## PACKAGING INFORMATION

| Orderable part number | Status (1) | Material type (2) | Package \| Pins | Package qty \| Carrier | RoHS (3) | Lead finish/ Ball material (4) | MSL rating/ Peak reflow (5) | Op temp (°C) | Part marking (6) |
|---|---|---|---|---|---|---|---|---|---|
| M430G2402IPW14RG4 | Active | Production | TSSOP (PW) \| 14 | 2000 \| LARGE T&R | Yes | NIPDAU | Level-1-260C-UNLIM | -40 to 85 | G2402 |
| M430G2402IPW14RG4.A | Active | Production | TSSOP (PW) \| 14 | 2000 \| LARGE T&R | Yes | NIPDAU | Level-1-260C-UNLIM | -40 to 85 | G2402 |
| M430G2402IPW14RG4.B | Active | Production | TSSOP (PW) \| 14 | 2000 \| LARGE T&R | Yes | NIPDAU | Level-1-260C-UNLIM | -40 to 85 | G2402 |
| M430G2402IRSA16RG4 | Active | Production | QFN (RSA) \| 16 | 3000 \| LARGE T&R | Yes | NIPDAU | Level-2-260C-1 YEAR | -40 to 85 | M430 G2402 |
| M430G2402IRSA16RG4.A | Active | Production | QFN (RSA) \| 16 | 3000 \| LARGE T&R | Yes | NIPDAU | Level-2-260C-1 YEAR | -40 to 85 | M430 G2402 |
| M430G2402IRSA16RG4.B | Active | Production | QFN (RSA) \| 16 | 3000 \| LARGE T&R | Yes | NIPDAU | Level-2-260C-1 YEAR | -40 to 85 | M430 G2402 |
| MSP430G2102IN20 | Active | Production | PDIP (N) \| 20 | 20 \| TUBE | Yes | NIPDAU | Level-1-260C-UNLIM | -40 to 85 | M430G2102 |
| MSP430G2102IN20.A | Active | Production | PDIP (N) \| 20 | 20 \| TUBE | Yes | NIPDAU | Level-1-260C-UNLIM | -40 to 85 | M430G2102 |
| MSP430G2102IN20.B | Active | Production | PDIP (N) \| 20 | 20 \| TUBE | Yes | NIPDAU | Level-1-260C-UNLIM | -40 to 85 | M430G2102 |
| MSP430G2102IPW14 | Active | Production | TSSOP (PW) \| 14 | 90 \| TUBE | Yes | NIPDAU | Level-1-260C-UNLIM | -40 to 85 | G2102 |
| MSP430G2102IPW14.A | Active | Production | TSSOP (PW) \| 14 | 90 \| TUBE | Yes | NIPDAU | Level-1-260C-UNLIM | -40 to 85 | G2102 |
| MSP430G2102IPW14.B | Active | Production | TSSOP (PW) \| 14 | 90 \| TUBE | Yes | NIPDAU | Level-1-260C-UNLIM | -40 to 85 | G2102 |
| MSP430G2102IPW14R | Active | Production | TSSOP (PW) \| 14 | 2000 \| LARGE T&R | Yes | NIPDAU | Level-1-260C-UNLIM | -40 to 85 | G2102 |
| MSP430G2102IPW14R.A | Active | Production | TSSOP (PW) \| 14 | 2000 \| LARGE T&R | Yes | NIPDAU | Level-1-260C-UNLIM | -40 to 85 | G2102 |
| MSP430G2102IPW14R.B | Active | Production | TSSOP (PW) \| 14 | 2000 \| LARGE T&R | Yes | NIPDAU | Level-1-260C-UNLIM | -40 to 85 | G2102 |
| MSP430G2102IPW20 | Active | Production | TSSOP (PW) \| 20 | 70 \| TUBE | Yes | NIPDAU | Level-1-260C-UNLIM | -40 to 85 | 430G2102 |
| MSP430G2102IPW20.A | Active | Production | TSSOP (PW) \| 20 | 70 \| TUBE | Yes | NIPDAU | Level-1-260C-UNLIM | -40 to 85 | 430G2102 |
| MSP430G2102IPW20.B | Active | Production | TSSOP (PW) \| 20 | 70 \| TUBE | Yes | NIPDAU | Level-1-260C-UNLIM | -40 to 85 | 430G2102 |
| MSP430G2102IPW20R | Active | Production | TSSOP (PW) \| 20 | 2000 \| LARGE T&R | Yes | NIPDAU | Level-1-260C-UNLIM | -40 to 85 | 430G2102 |
| MSP430G2102IPW20R.A | Active | Production | TSSOP (PW) \| 20 | 2000 \| LARGE T&R | Yes | NIPDAU | Level-1-260C-UNLIM | -40 to 85 | 430G2102 |
| MSP430G2102IPW20R.B | Active | Production | TSSOP (PW) \| 20 | 2000 \| LARGE T&R | Yes | NIPDAU | Level-1-260C-UNLIM | -40 to 85 | 430G2102 |
| MSP430G2102IRSA16T | Active | Production | QFN (RSA) \| 16 | 250 \| SMALL T&R | Yes | NIPDAU \| SN | Level-2-260C-1 YEAR | -40 to 85 | M430 G2102 |
| MSP430G2102IRSA16T.A | Active | Production | QFN (RSA) \| 16 | 250 \| SMALL T&R | Yes | NIPDAU | Level-2-260C-1 YEAR | -40 to 85 | M430 G2102 |
| MSP430G2102IRSA16T.B | Active | Production | QFN (RSA) \| 16 | 250 \| SMALL T&R | Yes | NIPDAU | Level-2-260C-1 YEAR | -40 to 85 | M430 G2102 |
| MSP430G2132IN20 | Active | Production | PDIP (N) \| 20 | 20 \| TUBE | Yes | NIPDAU | Level-1-260C-UNLIM | -40 to 85 | M430G2132 |

| Orderable part number | Status (1) | Material type (2) | Package \| Pins | Package qty \| Carrier | RoHS (3) | Lead finish/ Ball material (4) | MSL rating/ Peak reflow (5) | Op temp (°C) | Part marking (6) |
|---|---|---|---|---|---|---|---|---|---|
| MSP430G2132IN20.A | Active | Production | PDIP (N) \| 20 | 20 \| TUBE | Yes | NIPDAU | Level-1-260C-UNLIM | -40 to 85 | M430G2132 |
| MSP430G2132IN20.B | Active | Production | PDIP (N) \| 20 | 20 \| TUBE | Yes | NIPDAU | Level-1-260C-UNLIM | -40 to 85 | M430G2132 |
| MSP430G2132IPW14 | Active | Production | TSSOP (PW) \| 14 | 90 \| TUBE | Yes | NIPDAU | Level-1-260C-UNLIM | -40 to 85 | G2132 |
| MSP430G2132IPW14.A | Active | Production | TSSOP (PW) \| 14 | 90 \| TUBE | Yes | NIPDAU | Level-1-260C-UNLIM | -40 to 85 | G2132 |
| MSP430G2132IPW14.B | Active | Production | TSSOP (PW) \| 14 | 90 \| TUBE | Yes | NIPDAU | Level-1-260C-UNLIM | -40 to 85 | G2132 |
| MSP430G2132IPW14R | Active | Production | TSSOP (PW) \| 14 | 2000 \| LARGE T&R | Yes | NIPDAU | Level-1-260C-UNLIM | -40 to 85 | G2132 |
| MSP430G2132IPW14R.A | Active | Production | TSSOP (PW) \| 14 | 2000 \| LARGE T&R | Yes | NIPDAU | Level-1-260C-UNLIM | -40 to 85 | G2132 |
| MSP430G2132IPW14R.B | Active | Production | TSSOP (PW) \| 14 | 2000 \| LARGE T&R | Yes | NIPDAU | Level-1-260C-UNLIM | -40 to 85 | G2132 |
| MSP430G2132IPW20 | Active | Production | TSSOP (PW) \| 20 | 70 \| TUBE | Yes | NIPDAU | Level-1-260C-UNLIM | -40 to 85 | 430G2132 |
| MSP430G2132IPW20.A | Active | Production | TSSOP (PW) \| 20 | 70 \| TUBE | Yes | NIPDAU | Level-1-260C-UNLIM | -40 to 85 | 430G2132 |
| MSP430G2132IPW20.B | Active | Production | TSSOP (PW) \| 20 | 70 \| TUBE | Yes | NIPDAU | Level-1-260C-UNLIM | -40 to 85 | 430G2132 |
| MSP430G2132IPW20R | Active | Production | TSSOP (PW) \| 20 | 2000 \| LARGE T&R | Yes | NIPDAU | Level-1-260C-UNLIM | -40 to 85 | 430G2132 |
| MSP430G2132IPW20R.A | Active | Production | TSSOP (PW) \| 20 | 2000 \| LARGE T&R | Yes | NIPDAU | Level-1-260C-UNLIM | -40 to 85 | 430G2132 |
| MSP430G2132IPW20R.B | Active | Production | TSSOP (PW) \| 20 | 2000 \| LARGE T&R | Yes | NIPDAU | Level-1-260C-UNLIM | -40 to 85 | 430G2132 |
| MSP430G2132IRSA16R | Active | Production | QFN (RSA) \| 16 | 3000 \| LARGE T&R | Yes | NIPDAU \| SN | Level-2-260C-1 YEAR | -40 to 85 | M430 G2132 |
| MSP430G2132IRSA16R.A | Active | Production | QFN (RSA) \| 16 | 3000 \| LARGE T&R | Yes | NIPDAU | Level-2-260C-1 YEAR | -40 to 85 | M430 G2132 |
| MSP430G2132IRSA16R.B | Active | Production | QFN (RSA) \| 16 | 3000 \| LARGE T&R | Yes | NIPDAU | Level-2-260C-1 YEAR | -40 to 85 | M430 G2132 |
| MSP430G2132IRSA16T | Active | Production | QFN (RSA) \| 16 | 250 \| SMALL T&R | Yes | NIPDAU \| SN | Level-2-260C-1 YEAR | -40 to 85 | M430 G2132 |
| MSP430G2132IRSA16T.A | Active | Production | QFN (RSA) \| 16 | 250 \| SMALL T&R | Yes | NIPDAU | Level-2-260C-1 YEAR | -40 to 85 | M430 G2132 |
| MSP430G2132IRSA16T.B | Active | Production | QFN (RSA) \| 16 | 250 \| SMALL T&R | Yes | NIPDAU | Level-2-260C-1 YEAR | -40 to 85 | M430 G2132 |
| MSP430G2202IN20 | Active | Production | PDIP (N) \| 20 | 20 \| TUBE | Yes | NIPDAU | Level-1-260C-UNLIM | -40 to 85 | M430G2202 |
| MSP430G2202IN20.A | Active | Production | PDIP (N) \| 20 | 20 \| TUBE | Yes | NIPDAU | Level-1-260C-UNLIM | -40 to 85 | M430G2202 |
| MSP430G2202IN20.B | Active | Production | PDIP (N) \| 20 | 20 \| TUBE | Yes | NIPDAU | Level-1-260C-UNLIM | -40 to 85 | M430G2202 |
| MSP430G2202IPW14 | Active | Production | TSSOP (PW) \| 14 | 90 \| TUBE | Yes | NIPDAU | Level-1-260C-UNLIM | -40 to 85 | G2202 |
| MSP430G2202IPW14.A | Active | Production | TSSOP (PW) \| 14 | 90 \| TUBE | Yes | NIPDAU | Level-1-260C-UNLIM | -40 to 85 | G2202 |
| MSP430G2202IPW14.B | Active | Production | TSSOP (PW) \| 14 | 90 \| TUBE | Yes | NIPDAU | Level-1-260C-UNLIM | -40 to 85 | G2202 |

| Orderable part number | Status (1) | Material type (2) | Package \| Pins | Package qty \| Carrier | RoHS (3) | Lead finish/ Ball material (4) | MSL rating/ Peak reflow (5) | Op temp (°C) | Part marking (6) |
|---|---|---|---|---|---|---|---|---|---|
| MSP430G2202IPW14R | Active | Production | TSSOP (PW) \| 14 | 2000 \| LARGE T&R | Yes | NIPDAU | Level-1-260C-UNLIM | -40 to 85 | G2202 |
| MSP430G2202IPW14R.A | Active | Production | TSSOP (PW) \| 14 | 2000 \| LARGE T&R | Yes | NIPDAU | Level-1-260C-UNLIM | -40 to 85 | G2202 |
| MSP430G2202IPW14R.B | Active | Production | TSSOP (PW) \| 14 | 2000 \| LARGE T&R | Yes | NIPDAU | Level-1-260C-UNLIM | -40 to 85 | G2202 |
| MSP430G2202IPW20 | Active | Production | TSSOP (PW) \| 20 | 70 \| TUBE | Yes | NIPDAU | Level-1-260C-UNLIM | -40 to 85 | 430G2202 |
| MSP430G2202IPW20.A | Active | Production | TSSOP (PW) \| 20 | 70 \| TUBE | Yes | NIPDAU | Level-1-260C-UNLIM | -40 to 85 | 430G2202 |
| MSP430G2202IPW20.B | Active | Production | TSSOP (PW) \| 20 | 70 \| TUBE | Yes | NIPDAU | Level-1-260C-UNLIM | -40 to 85 | 430G2202 |
| MSP430G2202IPW20R | Active | Production | TSSOP (PW) \| 20 | 2000 \| LARGE T&R | Yes | NIPDAU | Level-1-260C-UNLIM | -40 to 85 | 430G2202 |
| MSP430G2202IPW20R.A | Active | Production | TSSOP (PW) \| 20 | 2000 \| LARGE T&R | Yes | NIPDAU | Level-1-260C-UNLIM | -40 to 85 | 430G2202 |
| MSP430G2202IPW20R.B | Active | Production | TSSOP (PW) \| 20 | 2000 \| LARGE T&R | Yes | NIPDAU | Level-1-260C-UNLIM | -40 to 85 | 430G2202 |
| MSP430G2202IRSA16R | Active | Production | QFN (RSA) \| 16 | 3000 \| LARGE T&R | Yes | NIPDAU \| SN | Level-1-260C-UNLIM | -40 to 85 | M430 G2202 |
| MSP430G2202IRSA16R.A | Active | Production | QFN (RSA) \| 16 | 3000 \| LARGE T&R | Yes | NIPDAU | Level-1-260C-UNLIM | -40 to 85 | M430 G2202 |
| MSP430G2202IRSA16R.B | Active | Production | QFN (RSA) \| 16 | 3000 \| LARGE T&R | Yes | NIPDAU | Level-1-260C-UNLIM | -40 to 85 | M430 G2202 |
| MSP430G2202IRSA16T | Active | Production | QFN (RSA) \| 16 | 250 \| SMALL T&R | Yes | NIPDAU \| SN | Level-2-260C-1 YEAR | -40 to 85 | M430 G2202 |
| MSP430G2202IRSA16T.A | Active | Production | QFN (RSA) \| 16 | 250 \| SMALL T&R | Yes | NIPDAU | Level-2-260C-1 YEAR | -40 to 85 | M430 G2202 |
| MSP430G2202IRSA16T.B | Active | Production | QFN (RSA) \| 16 | 250 \| SMALL T&R | Yes | NIPDAU | Level-2-260C-1 YEAR | -40 to 85 | M430 G2202 |
| MSP430G2232IN20 | Active | Production | PDIP (N) \| 20 | 20 \| TUBE | Yes | NIPDAU | Level-1-260C-UNLIM | -40 to 85 | M430G2232 |
| MSP430G2232IN20.A | Active | Production | PDIP (N) \| 20 | 20 \| TUBE | Yes | NIPDAU | Level-1-260C-UNLIM | -40 to 85 | M430G2232 |
| MSP430G2232IN20.B | Active | Production | PDIP (N) \| 20 | 20 \| TUBE | Yes | NIPDAU | Level-1-260C-UNLIM | -40 to 85 | M430G2232 |
| MSP430G2232IPW14 | Active | Production | TSSOP (PW) \| 14 | 90 \| TUBE | Yes | NIPDAU | Level-1-260C-UNLIM | -40 to 85 | G2232 |
| MSP430G2232IPW14.A | Active | Production | TSSOP (PW) \| 14 | 90 \| TUBE | Yes | NIPDAU | Level-1-260C-UNLIM | -40 to 85 | G2232 |
| MSP430G2232IPW14.B | Active | Production | TSSOP (PW) \| 14 | 90 \| TUBE | Yes | NIPDAU | Level-1-260C-UNLIM | -40 to 85 | G2232 |
| MSP430G2232IPW14R | Active | Production | TSSOP (PW) \| 14 | 2000 \| LARGE T&R | Yes | NIPDAU | Level-1-260C-UNLIM | -40 to 85 | G2232 |
| MSP430G2232IPW14R.A | Active | Production | TSSOP (PW) \| 14 | 2000 \| LARGE T&R | Yes | NIPDAU | Level-1-260C-UNLIM | -40 to 85 | G2232 |
| MSP430G2232IPW14R.B | Active | Production | TSSOP (PW) \| 14 | 2000 \| LARGE T&R | Yes | NIPDAU | Level-1-260C-UNLIM | -40 to 85 | G2232 |
| MSP430G2232IPW20 | Active | Production | TSSOP (PW) \| 20 | 70 \| TUBE | Yes | NIPDAU | Level-1-260C-UNLIM | -40 to 85 | 430G2232 |
| MSP430G2232IPW20.A | Active | Production | TSSOP (PW) \| 20 | 70 \| TUBE | Yes | NIPDAU | Level-1-260C-UNLIM | -40 to 85 | 430G2232 |

| Orderable part number | Status (1) | Material type (2) | Package \| Pins | Package qty \| Carrier | RoHS (3) | Lead finish/ Ball material (4) | MSL rating/ Peak reflow (5) | Op temp (°C) | Part marking (6) |
|---|---|---|---|---|---|---|---|---|---|
| MSP430G2232IPW20.B | Active | Production | TSSOP (PW) \| 20 | 70 \| TUBE | Yes | NIPDAU | Level-1-260C-UNLIM | -40 to 85 | 430G2232 |
| MSP430G2232IPW20R | Active | Production | TSSOP (PW) \| 20 | 2000 \| LARGE T&R | Yes | NIPDAU | Level-1-260C-UNLIM | -40 to 85 | 430G2232 |
| MSP430G2232IPW20R.A | Active | Production | TSSOP (PW) \| 20 | 2000 \| LARGE T&R | Yes | NIPDAU | Level-1-260C-UNLIM | -40 to 85 | 430G2232 |
| MSP430G2232IPW20R.B | Active | Production | TSSOP (PW) \| 20 | 2000 \| LARGE T&R | Yes | NIPDAU | Level-1-260C-UNLIM | -40 to 85 | 430G2232 |
| MSP430G2232IRSA16R | Active | Production | QFN (RSA) \| 16 | 3000 \| LARGE T&R | Yes | NIPDAU \| SN | Level-1-260C-UNLIM | -40 to 85 | M430 G2232 |
| MSP430G2232IRSA16R.A | Active | Production | QFN (RSA) \| 16 | 3000 \| LARGE T&R | Yes | NIPDAU | Level-1-260C-UNLIM | -40 to 85 | M430 G2232 |
| MSP430G2232IRSA16R.B | Active | Production | QFN (RSA) \| 16 | 3000 \| LARGE T&R | Yes | NIPDAU | Level-1-260C-UNLIM | -40 to 85 | M430 G2232 |
| MSP430G2232IRSA16T | Active | Production | QFN (RSA) \| 16 | 250 \| SMALL T&R | Yes | NIPDAU \| SN | Level-2-260C-1 YEAR | -40 to 85 | M430 G2232 |
| MSP430G2232IRSA16T.A | Active | Production | QFN (RSA) \| 16 | 250 \| SMALL T&R | Yes | NIPDAU | Level-2-260C-1 YEAR | -40 to 85 | M430 G2232 |
| MSP430G2232IRSA16T.B | Active | Production | QFN (RSA) \| 16 | 250 \| SMALL T&R | Yes | NIPDAU | Level-2-260C-1 YEAR | -40 to 85 | M430 G2232 |
| MSP430G2302IN20 | Active | Production | PDIP (N) \| 20 | 20 \| TUBE | Yes | NIPDAU | Level-1-260C-UNLIM | -40 to 85 | M430G2302 |
| MSP430G2302IN20.A | Active | Production | PDIP (N) \| 20 | 20 \| TUBE | Yes | NIPDAU | Level-1-260C-UNLIM | -40 to 85 | M430G2302 |
| MSP430G2302IN20.B | Active | Production | PDIP (N) \| 20 | 20 \| TUBE | Yes | NIPDAU | Level-1-260C-UNLIM | -40 to 85 | M430G2302 |
| MSP430G2302IPW14 | Active | Production | TSSOP (PW) \| 14 | 90 \| TUBE | Yes | NIPDAU | Level-1-260C-UNLIM | -40 to 85 | G2302 |
| MSP430G2302IPW14.A | Active | Production | TSSOP (PW) \| 14 | 90 \| TUBE | Yes | NIPDAU | Level-1-260C-UNLIM | -40 to 85 | G2302 |
| MSP430G2302IPW14.B | Active | Production | TSSOP (PW) \| 14 | 90 \| TUBE | Yes | NIPDAU | Level-1-260C-UNLIM | -40 to 85 | G2302 |
| MSP430G2302IPW14R | Active | Production | TSSOP (PW) \| 14 | 2000 \| LARGE T&R | Yes | NIPDAU | Level-1-260C-UNLIM | -40 to 85 | G2302 |
| MSP430G2302IPW14R.A | Active | Production | TSSOP (PW) \| 14 | 2000 \| LARGE T&R | Yes | NIPDAU | Level-1-260C-UNLIM | -40 to 85 | G2302 |
| MSP430G2302IPW14R.B | Active | Production | TSSOP (PW) \| 14 | 2000 \| LARGE T&R | Yes | NIPDAU | Level-1-260C-UNLIM | -40 to 85 | G2302 |
| MSP430G2302IPW20 | Active | Production | TSSOP (PW) \| 20 | 70 \| TUBE | Yes | NIPDAU | Level-1-260C-UNLIM | -40 to 85 | 430G2302 |
| MSP430G2302IPW20.A | Active | Production | TSSOP (PW) \| 20 | 70 \| TUBE | Yes | NIPDAU | Level-1-260C-UNLIM | -40 to 85 | 430G2302 |
| MSP430G2302IPW20.B | Active | Production | TSSOP (PW) \| 20 | 70 \| TUBE | Yes | NIPDAU | Level-1-260C-UNLIM | -40 to 85 | 430G2302 |
| MSP430G2302IPW20R | Active | Production | TSSOP (PW) \| 20 | 2000 \| LARGE T&R | Yes | NIPDAU | Level-1-260C-UNLIM | -40 to 85 | 430G2302 |
| MSP430G2302IPW20R.A | Active | Production | TSSOP (PW) \| 20 | 2000 \| LARGE T&R | Yes | NIPDAU | Level-1-260C-UNLIM | -40 to 85 | 430G2302 |
| MSP430G2302IPW20R.B | Active | Production | TSSOP (PW) \| 20 | 2000 \| LARGE T&R | Yes | NIPDAU | Level-1-260C-UNLIM | -40 to 85 | 430G2302 |

| Orderable part number | Status (1) | Material type (2) | Package \| Pins | Package qty \| Carrier | RoHS (3) | Lead finish/ Ball material (4) | MSL rating/ Peak reflow (5) | Op temp (°C) | Part marking (6) |
|---|---|---|---|---|---|---|---|---|---|
| MSP430G2302IRSA16R | Active | Production | QFN (RSA) \| 16 | 3000 \| LARGE T&R | Yes | NIPDAU \| SN | Level-2-260C-1 YEAR | -40 to 85 | M430 G2302 |
| MSP430G2302IRSA16R.A | Active | Production | QFN (RSA) \| 16 | 3000 \| LARGE T&R | Yes | NIPDAU | Level-2-260C-1 YEAR | -40 to 85 | M430 G2302 |
| MSP430G2302IRSA16R.B | Active | Production | QFN (RSA) \| 16 | 3000 \| LARGE T&R | Yes | NIPDAU | Level-2-260C-1 YEAR | -40 to 85 | M430 G2302 |
| MSP430G2302IRSA16T | Active | Production | QFN (RSA) \| 16 | 250 \| SMALL T&R | Yes | NIPDAU \| SN | Level-2-260C-1 YEAR | -40 to 85 | M430 G2302 |
| MSP430G2302IRSA16T.A | Active | Production | QFN (RSA) \| 16 | 250 \| SMALL T&R | Yes | NIPDAU | Level-2-260C-1 YEAR | -40 to 85 | M430 G2302 |
| MSP430G2302IRSA16T.B | Active | Production | QFN (RSA) \| 16 | 250 \| SMALL T&R | Yes | NIPDAU | Level-2-260C-1 YEAR | -40 to 85 | M430 G2302 |
| MSP430G2332IN20 | Active | Production | PDIP (N) \| 20 | 20 \| TUBE | Yes | NIPDAU | Level-1-260C-UNLIM | -40 to 85 | M430G2332 |
| MSP430G2332IN20.A | Active | Production | PDIP (N) \| 20 | 20 \| TUBE | Yes | NIPDAU | Level-1-260C-UNLIM | -40 to 85 | M430G2332 |
| MSP430G2332IN20.B | Active | Production | PDIP (N) \| 20 | 20 \| TUBE | Yes | NIPDAU | Level-1-260C-UNLIM | -40 to 85 | M430G2332 |
| MSP430G2332IPW14 | Active | Production | TSSOP (PW) \| 14 | 90 \| TUBE | Yes | NIPDAU | Level-1-260C-UNLIM | -40 to 85 | G2332 |
| MSP430G2332IPW14.A | Active | Production | TSSOP (PW) \| 14 | 90 \| TUBE | Yes | NIPDAU | Level-1-260C-UNLIM | -40 to 85 | G2332 |
| MSP430G2332IPW14.B | Active | Production | TSSOP (PW) \| 14 | 90 \| TUBE | Yes | NIPDAU | Level-1-260C-UNLIM | -40 to 85 | G2332 |
| MSP430G2332IPW14R | Active | Production | TSSOP (PW) \| 14 | 2000 \| LARGE T&R | Yes | NIPDAU | Level-1-260C-UNLIM | -40 to 85 | G2332 |
| MSP430G2332IPW14R.A | Active | Production | TSSOP (PW) \| 14 | 2000 \| LARGE T&R | Yes | NIPDAU | Level-1-260C-UNLIM | -40 to 85 | G2332 |
| MSP430G2332IPW14R.B | Active | Production | TSSOP (PW) \| 14 | 2000 \| LARGE T&R | Yes | NIPDAU | Level-1-260C-UNLIM | -40 to 85 | G2332 |
| MSP430G2332IPW20 | Active | Production | TSSOP (PW) \| 20 | 70 \| TUBE | Yes | NIPDAU | Level-1-260C-UNLIM | -40 to 85 | 430G2332 |
| MSP430G2332IPW20.A | Active | Production | TSSOP (PW) \| 20 | 70 \| TUBE | Yes | NIPDAU | Level-1-260C-UNLIM | -40 to 85 | 430G2332 |
| MSP430G2332IPW20.B | Active | Production | TSSOP (PW) \| 20 | 70 \| TUBE | Yes | NIPDAU | Level-1-260C-UNLIM | -40 to 85 | 430G2332 |
| MSP430G2332IPW20R | Active | Production | TSSOP (PW) \| 20 | 2000 \| LARGE T&R | Yes | NIPDAU | Level-1-260C-UNLIM | -40 to 85 | 430G2332 |
| MSP430G2332IPW20R.A | Active | Production | TSSOP (PW) \| 20 | 2000 \| LARGE T&R | Yes | NIPDAU | Level-1-260C-UNLIM | -40 to 85 | 430G2332 |
| MSP430G2332IPW20R.B | Active | Production | TSSOP (PW) \| 20 | 2000 \| LARGE T&R | Yes | NIPDAU | Level-1-260C-UNLIM | -40 to 85 | 430G2332 |
| MSP430G2332IRSA16R | Active | Production | QFN (RSA) \| 16 | 3000 \| LARGE T&R | Yes | NIPDAU \| SN | Level-1-260C-UNLIM | -40 to 85 | M430 G2332 |
| MSP430G2332IRSA16R.A | Active | Production | QFN (RSA) \| 16 | 3000 \| LARGE T&R | Yes | NIPDAU | Level-1-260C-UNLIM | -40 to 85 | M430 G2332 |
| MSP430G2332IRSA16R.B | Active | Production | QFN (RSA) \| 16 | 3000 \| LARGE T&R | Yes | NIPDAU | Level-1-260C-UNLIM | -40 to 85 | M430 G2332 |

| Orderable part number | Status (1) | Material type (2) | Package \| Pins | Package qty \| Carrier | RoHS (3) | Lead finish/ Ball material (4) | MSL rating/ Peak reflow (5) | Op temp (°C) | Part marking (6) |
|---|---|---|---|---|---|---|---|---|---|
| MSP430G2332IRSA16T | Active | Production | QFN (RSA) \| 16 | 250 \| SMALL T&R | Yes | NIPDAU \| SN | Level-1-260C-UNLIM | -40 to 85 | M430 G2332 |
| MSP430G2332IRSA16T.A | Active | Production | QFN (RSA) \| 16 | 250 \| SMALL T&R | Yes | NIPDAU | Level-1-260C-UNLIM | -40 to 85 | M430 G2332 |
| MSP430G2332IRSA16T.B | Active | Production | QFN (RSA) \| 16 | 250 \| SMALL T&R | Yes | NIPDAU | Level-1-260C-UNLIM | -40 to 85 | M430 G2332 |
| MSP430G2402IN20 | Active | Production | PDIP (N) \| 20 | 20 \| TUBE | Yes | NIPDAU | Level-1-260C-UNLIM | -40 to 85 | M430G2402 |
| MSP430G2402IN20.A | Active | Production | PDIP (N) \| 20 | 20 \| TUBE | Yes | NIPDAU | Level-1-260C-UNLIM | -40 to 85 | M430G2402 |
| MSP430G2402IN20.B | Active | Production | PDIP (N) \| 20 | 20 \| TUBE | Yes | NIPDAU | Level-1-260C-UNLIM | -40 to 85 | M430G2402 |
| MSP430G2402IPW14 | Active | Production | TSSOP (PW) \| 14 | 90 \| TUBE | Yes | NIPDAU | Level-1-260C-UNLIM | -40 to 85 | G2402 |
| MSP430G2402IPW14.A | Active | Production | TSSOP (PW) \| 14 | 90 \| TUBE | Yes | NIPDAU | Level-1-260C-UNLIM | -40 to 85 | G2402 |
| MSP430G2402IPW14.B | Active | Production | TSSOP (PW) \| 14 | 90 \| TUBE | Yes | NIPDAU | Level-1-260C-UNLIM | -40 to 85 | G2402 |
| MSP430G2402IPW14R | Active | Production | TSSOP (PW) \| 14 | 2000 \| LARGE T&R | Yes | NIPDAU | Level-1-260C-UNLIM | -40 to 85 | G2402 |
| MSP430G2402IPW14R.A | Active | Production | TSSOP (PW) \| 14 | 2000 \| LARGE T&R | Yes | NIPDAU | Level-1-260C-UNLIM | -40 to 85 | G2402 |
| MSP430G2402IPW14R.B | Active | Production | TSSOP (PW) \| 14 | 2000 \| LARGE T&R | Yes | NIPDAU | Level-1-260C-UNLIM | -40 to 85 | G2402 |
| MSP430G2402IPW20 | Active | Production | TSSOP (PW) \| 20 | 70 \| TUBE | Yes | NIPDAU | Level-1-260C-UNLIM | -40 to 85 | 430G2402 |
| MSP430G2402IPW20.A | Active | Production | TSSOP (PW) \| 20 | 70 \| TUBE | Yes | NIPDAU | Level-1-260C-UNLIM | -40 to 85 | 430G2402 |
| MSP430G2402IPW20.B | Active | Production | TSSOP (PW) \| 20 | 70 \| TUBE | Yes | NIPDAU | Level-1-260C-UNLIM | -40 to 85 | 430G2402 |
| MSP430G2402IPW20R | Active | Production | TSSOP (PW) \| 20 | 2000 \| LARGE T&R | Yes | NIPDAU | Level-1-260C-UNLIM | -40 to 85 | 430G2402 |
| MSP430G2402IPW20R.A | Active | Production | TSSOP (PW) \| 20 | 2000 \| LARGE T&R | Yes | NIPDAU | Level-1-260C-UNLIM | -40 to 85 | 430G2402 |
| MSP430G2402IPW20R.B | Active | Production | TSSOP (PW) \| 20 | 2000 \| LARGE T&R | Yes | NIPDAU | Level-1-260C-UNLIM | -40 to 85 | 430G2402 |
| MSP430G2402IRSA16R | Active | Production | QFN (RSA) \| 16 | 3000 \| LARGE T&R | Yes | NIPDAU \| SN | Level-2-260C-1 YEAR | -40 to 85 | M430 G2402 |
| MSP430G2402IRSA16R.A | Active | Production | QFN (RSA) \| 16 | 3000 \| LARGE T&R | Yes | NIPDAU | Level-2-260C-1 YEAR | -40 to 85 | M430 G2402 |
| MSP430G2402IRSA16R.B | Active | Production | QFN (RSA) \| 16 | 3000 \| LARGE T&R | Yes | NIPDAU | Level-2-260C-1 YEAR | -40 to 85 | M430 G2402 |
| MSP430G2402IRSA16T | Active | Production | QFN (RSA) \| 16 | 250 \| SMALL T&R | Yes | NIPDAU \| SN | Level-2-260C-1 YEAR | -40 to 85 | M430 G2402 |
| MSP430G2402IRSA16T.A | Active | Production | QFN (RSA) \| 16 | 250 \| SMALL T&R | Yes | NIPDAU | Level-2-260C-1 YEAR | -40 to 85 | M430 G2402 |
| MSP430G2402IRSA16T.B | Active | Production | QFN (RSA) \| 16 | 250 \| SMALL T&R | Yes | NIPDAU | Level-2-260C-1 YEAR | -40 to 85 | M430 G2402 |

| Orderable part number | Status (1) | Material type (2) | Package \| Pins | Package qty \| Carrier | RoHS (3) | Lead finish/ Ball material (4) | MSL rating/ Peak reflow (5) | Op temp (°C) | Part marking (6) |
|---|---|---|---|---|---|---|---|---|---|
| MSP430G2432IN20 | Active | Production | PDIP (N) \| 20 | 20 \| TUBE | Yes | NIPDAU | Level-1-260C-UNLIM | -40 to 85 | M430G2432 |
| MSP430G2432IN20.A | Active | Production | PDIP (N) \| 20 | 20 \| TUBE | Yes | NIPDAU | Level-1-260C-UNLIM | -40 to 85 | M430G2432 |
| MSP430G2432IN20.B | Active | Production | PDIP (N) \| 20 | 20 \| TUBE | Yes | NIPDAU | Level-1-260C-UNLIM | -40 to 85 | M430G2432 |
| MSP430G2432IPW14 | Active | Production | TSSOP (PW) \| 14 | 90 \| TUBE | Yes | NIPDAU | Level-1-260C-UNLIM | -40 to 85 | G2432 |
| MSP430G2432IPW14.A | Active | Production | TSSOP (PW) \| 14 | 90 \| TUBE | Yes | NIPDAU | Level-1-260C-UNLIM | -40 to 85 | G2432 |
| MSP430G2432IPW14.B | Active | Production | TSSOP (PW) \| 14 | 90 \| TUBE | Yes | NIPDAU | Level-1-260C-UNLIM | -40 to 85 | G2432 |
| MSP430G2432IPW14R | Active | Production | TSSOP (PW) \| 14 | 2000 \| LARGE T&R | Yes | NIPDAU | Level-1-260C-UNLIM | -40 to 85 | G2432 |
| MSP430G2432IPW14R.A | Active | Production | TSSOP (PW) \| 14 | 2000 \| LARGE T&R | Yes | NIPDAU | Level-1-260C-UNLIM | -40 to 85 | G2432 |
| MSP430G2432IPW14R.B | Active | Production | TSSOP (PW) \| 14 | 2000 \| LARGE T&R | Yes | NIPDAU | Level-1-260C-UNLIM | -40 to 85 | G2432 |
| MSP430G2432IPW20 | Active | Production | TSSOP (PW) \| 20 | 70 \| TUBE | Yes | NIPDAU | Level-1-260C-UNLIM | -40 to 85 | 430G2432 |
| MSP430G2432IPW20.A | Active | Production | TSSOP (PW) \| 20 | 70 \| TUBE | Yes | NIPDAU | Level-1-260C-UNLIM | -40 to 85 | 430G2432 |
| MSP430G2432IPW20.B | Active | Production | TSSOP (PW) \| 20 | 70 \| TUBE | Yes | NIPDAU | Level-1-260C-UNLIM | -40 to 85 | 430G2432 |
| MSP430G2432IPW20R | Active | Production | TSSOP (PW) \| 20 | 2000 \| LARGE T&R | Yes | NIPDAU | Level-1-260C-UNLIM | -40 to 85 | 430G2432 |
| MSP430G2432IPW20R.A | Active | Production | TSSOP (PW) \| 20 | 2000 \| LARGE T&R | Yes | NIPDAU | Level-1-260C-UNLIM | -40 to 85 | 430G2432 |
| MSP430G2432IPW20R.B | Active | Production | TSSOP (PW) \| 20 | 2000 \| LARGE T&R | Yes | NIPDAU | Level-1-260C-UNLIM | -40 to 85 | 430G2432 |
| MSP430G2432IRSA16R | Active | Production | QFN (RSA) \| 16 | 3000 \| LARGE T&R | Yes | NIPDAU \| SN | Level-1-260C-UNLIM | -40 to 85 | M430 G2432 |
| MSP430G2432IRSA16R.A | Active | Production | QFN (RSA) \| 16 | 3000 \| LARGE T&R | Yes | NIPDAU | Level-1-260C-UNLIM | -40 to 85 | M430 G2432 |
| MSP430G2432IRSA16R.B | Active | Production | QFN (RSA) \| 16 | 3000 \| LARGE T&R | Yes | NIPDAU | Level-1-260C-UNLIM | -40 to 85 | M430 G2432 |
| MSP430G2432IRSA16T | Active | Production | QFN (RSA) \| 16 | 250 \| SMALL T&R | Yes | NIPDAU \| SN | Level-2-260C-1 YEAR | -40 to 85 | M430 G2432 |
| MSP430G2432IRSA16T.A | Active | Production | QFN (RSA) \| 16 | 250 \| SMALL T&R | Yes | NIPDAU | Level-2-260C-1 YEAR | -40 to 85 | M430 G2432 |
| MSP430G2432IRSA16T.B | Active | Production | QFN (RSA) \| 16 | 250 \| SMALL T&R | Yes | NIPDAU | Level-2-260C-1 YEAR | -40 to 85 | M430 G2432 |

(1) **Status:** For more details on status, see our product life cycle.

(2) **Material type:** When designated, preproduction parts are prototypes/experimental devices, and are not yet approved or released for full production. Testing and final process, including without limitation quality assurance, reliability performance testing, and/or process qualification, may not yet be complete, and this item is subject to further changes or possible discontinuation. If available for ordering, purchases will be subject to an additional waiver at checkout, and are intended for early internal evaluation purposes only. These items are sold without warranties of any kind.

(3) **RoHS values:** Yes, No, RoHS Exempt. See the TI RoHS Statement for additional information and value definition.

(4) **Lead finish/Ball material:** Parts may have multiple material finish options. Finish options are separated by a vertical ruled line. Lead finish/Ball material values may wrap to two lines if the finish value exceeds the maximum column width.

(5) **MSL rating/Peak reflow:** The moisture sensitivity level ratings and peak solder (reflow) temperatures. In the event that a part has multiple moisture sensitivity ratings, only the lowest level per JEDEC standards is shown. Refer to the shipping label for the actual reflow temperature that will be used to mount the part to the printed circuit board.

(6) **Part marking:** There may be an additional marking, which relates to the logo, the lot trace code information, or the environmental category of the part.

Multiple part markings will be inside parentheses. Only one part marking contained in parentheses and separated by a "~" will appear on a part. If a line is indented then it is a continuation of the previous line and the two combined represent the entire part marking for that device.

**Important Information and Disclaimer:**The information provided on this page represents TI's knowledge and belief as of the date that it is provided. TI bases its knowledge and belief on information provided by third parties, and makes no representation or warranty as to the accuracy of such information. Efforts are underway to better integrate information from third parties. TI has taken and continues to take reasonable steps to provide representative and accurate information but may not have conducted destructive testing or chemical analysis on incoming materials and chemicals. TI and TI suppliers consider certain information to be proprietary, and thus CAS numbers and other limited information may not be available for release.

In no event shall TI's liability arising out of such information exceed the total purchase price of the TI part(s) at issue in this document sold by TI to Customer on an annual basis.

**OTHER QUALIFIED VERSIONS OF MSP430G2302, MSP430G2332 :**

- Enhanced Product : MSP430G2302-EP, MSP430G2332-EP

NOTE: Qualified Version Definitions:

- Enhanced Product - Supports Defense, Aerospace and Medical Applications

## TAPE AND REEL INFORMATION

**REEL DIMENSIONS**

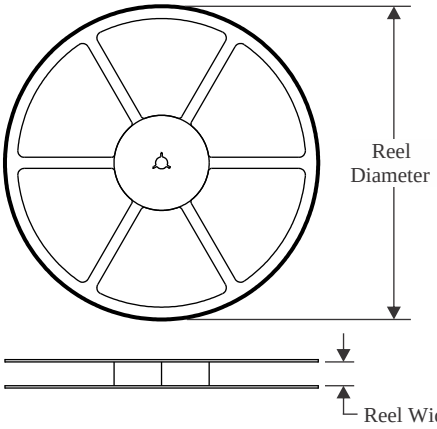


**TAPE DIMENSIONS**

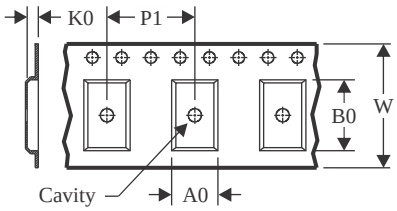


| | |
|---|---|
| A0 | Dimension designed to accommodate the component width |
| B0 | Dimension designed to accommodate the component length |
| K0 | Dimension designed to accommodate the component thickness |
| W | Overall width of the carrier tape |
| P1 | Pitch between successive cavity centers |

**QUADRANT ASSIGNMENTS FOR PIN 1 ORIENTATION IN TAPE**

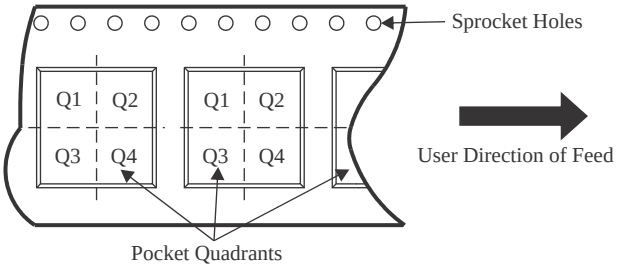


*All dimensions are nominal

| Device | Package Type | Package Drawing | Pins | SPQ | Reel Diameter (mm) | Reel Width W1 (mm) | A0 (mm) | B0 (mm) | K0 (mm) | P1 (mm) | W (mm) | Pin1 Quadrant |
|---|---|---|---|---|---|---|---|---|---|---|---|---|
| M430G2402IPW14RG4 | TSSOP | PW | 14 | 2000 | 330.0 | 12.4 | 6.9 | 5.6 | 1.6 | 8.0 | 12.0 | Q1 |
| M430G2402IRSA16RG4 | QFN | RSA | 16 | 3000 | 330.0 | 12.4 | 4.25 | 4.25 | 1.15 | 8.0 | 12.0 | Q2 |
| MSP430G2102IPW14R | TSSOP | PW | 14 | 2000 | 330.0 | 12.4 | 6.9 | 5.6 | 1.6 | 8.0 | 12.0 | Q1 |
| MSP430G2102IPW14R | TSSOP | PW | 14 | 2000 | 330.0 | 12.4 | 6.9 | 5.6 | 1.6 | 8.0 | 12.0 | Q1 |
| MSP430G2102IPW20R | TSSOP | PW | 20 | 2000 | 330.0 | 16.4 | 6.95 | 7.0 | 1.4 | 8.0 | 16.0 | Q1 |
| MSP430G2102IPW20R | TSSOP | PW | 20 | 2000 | 330.0 | 16.4 | 6.95 | 7.1 | 1.6 | 8.0 | 16.0 | Q1 |
| MSP430G2102IRSA16T | QFN | RSA | 16 | 250 | 180.0 | 12.4 | 4.25 | 4.25 | 1.15 | 8.0 | 12.0 | Q2 |
| MSP430G2102IRSA16T | QFN | RSA | 16 | 250 | 180.0 | 12.4 | 4.25 | 4.25 | 1.15 | 8.0 | 12.0 | Q2 |
| MSP430G2132IPW14R | TSSOP | PW | 14 | 2000 | 330.0 | 12.4 | 6.9 | 5.6 | 1.6 | 8.0 | 12.0 | Q1 |
| MSP430G2132IPW14R | TSSOP | PW | 14 | 2000 | 330.0 | 12.4 | 6.9 | 5.6 | 1.6 | 8.0 | 12.0 | Q1 |
| MSP430G2132IPW20R | TSSOP | PW | 20 | 2000 | 330.0 | 16.4 | 6.95 | 7.0 | 1.4 | 8.0 | 16.0 | Q1 |
| MSP430G2132IPW20R | TSSOP | PW | 20 | 2000 | 330.0 | 16.4 | 6.95 | 7.1 | 1.6 | 8.0 | 16.0 | Q1 |
| MSP430G2132IRSA16R | QFN | RSA | 16 | 3000 | 330.0 | 12.4 | 4.25 | 4.25 | 1.15 | 8.0 | 12.0 | Q2 |
| MSP430G2132IRSA16R | QFN | RSA | 16 | 3000 | 330.0 | 12.4 | 4.25 | 4.25 | 1.15 | 8.0 | 12.0 | Q2 |
| MSP430G2132IRSA16T | QFN | RSA | 16 | 250 | 180.0 | 12.4 | 4.25 | 4.25 | 1.15 | 8.0 | 12.0 | Q2 |
| MSP430G2132IRSA16T | QFN | RSA | 16 | 250 | 180.0 | 12.4 | 4.25 | 4.25 | 1.15 | 8.0 | 12.0 | Q2 |

| Device | Package Type | Package Drawing | Pins | SPQ | Reel Diameter (mm) | Reel Width W1 (mm) | A0 (mm) | B0 (mm) | K0 (mm) | P1 (mm) | W (mm) | Pin1 Quadrant |
|---|---|---|---|---|---|---|---|---|---|---|---|---|
| MSP430G2202IPW14R | TSSOP | PW | 14 | 2000 | 330.0 | 12.4 | 6.9 | 5.6 | 1.6 | 8.0 | 12.0 | Q1 |
| MSP430G2202IPW14R | TSSOP | PW | 14 | 2000 | 330.0 | 12.4 | 6.9 | 5.6 | 1.6 | 8.0 | 12.0 | Q1 |
| MSP430G2202IPW20R | TSSOP | PW | 20 | 2000 | 330.0 | 16.4 | 6.95 | 7.0 | 1.4 | 8.0 | 16.0 | Q1 |
| MSP430G2202IPW20R | TSSOP | PW | 20 | 2000 | 330.0 | 16.4 | 6.95 | 7.1 | 1.6 | 8.0 | 16.0 | Q1 |
| MSP430G2202IRSA16R | QFN | RSA | 16 | 3000 | 330.0 | 12.4 | 4.25 | 4.25 | 1.15 | 8.0 | 12.0 | Q2 |
| MSP430G2202IRSA16R | QFN | RSA | 16 | 3000 | 330.0 | 12.4 | 4.25 | 4.25 | 1.15 | 8.0 | 12.0 | Q2 |
| MSP430G2202IRSA16T | QFN | RSA | 16 | 250 | 180.0 | 12.4 | 4.25 | 4.25 | 1.15 | 8.0 | 12.0 | Q2 |
| MSP430G2202IRSA16T | QFN | RSA | 16 | 250 | 180.0 | 12.4 | 4.25 | 4.25 | 1.15 | 8.0 | 12.0 | Q2 |
| MSP430G2232IPW14R | TSSOP | PW | 14 | 2000 | 330.0 | 12.4 | 6.9 | 5.6 | 1.6 | 8.0 | 12.0 | Q1 |
| MSP430G2232IPW14R | TSSOP | PW | 14 | 2000 | 330.0 | 12.4 | 6.9 | 5.6 | 1.6 | 8.0 | 12.0 | Q1 |
| MSP430G2232IPW20R | TSSOP | PW | 20 | 2000 | 330.0 | 16.4 | 6.95 | 7.0 | 1.4 | 8.0 | 16.0 | Q1 |
| MSP430G2232IPW20R | TSSOP | PW | 20 | 2000 | 330.0 | 16.4 | 6.95 | 7.1 | 1.6 | 8.0 | 16.0 | Q1 |
| MSP430G2232IRSA16R | QFN | RSA | 16 | 3000 | 330.0 | 12.4 | 4.25 | 4.25 | 1.15 | 8.0 | 12.0 | Q2 |
| MSP430G2232IRSA16R | QFN | RSA | 16 | 3000 | 330.0 | 12.4 | 4.25 | 4.25 | 1.15 | 8.0 | 12.0 | Q2 |
| MSP430G2232IRSA16T | QFN | RSA | 16 | 250 | 180.0 | 12.4 | 4.25 | 4.25 | 1.15 | 8.0 | 12.0 | Q2 |
| MSP430G2232IRSA16T | QFN | RSA | 16 | 250 | 180.0 | 12.4 | 4.25 | 4.25 | 1.15 | 8.0 | 12.0 | Q2 |
| MSP430G2302IPW14R | TSSOP | PW | 14 | 2000 | 330.0 | 12.4 | 6.9 | 5.6 | 1.6 | 8.0 | 12.0 | Q1 |
| MSP430G2302IPW14R | TSSOP | PW | 14 | 2000 | 330.0 | 12.4 | 6.9 | 5.6 | 1.6 | 8.0 | 12.0 | Q1 |
| MSP430G2302IPW20R | TSSOP | PW | 20 | 2000 | 330.0 | 16.4 | 6.95 | 7.0 | 1.4 | 8.0 | 16.0 | Q1 |
| MSP430G2302IPW20R | TSSOP | PW | 20 | 2000 | 330.0 | 16.4 | 6.95 | 7.1 | 1.6 | 8.0 | 16.0 | Q1 |
| MSP430G2302IRSA16R | QFN | RSA | 16 | 3000 | 330.0 | 12.4 | 4.25 | 4.25 | 1.15 | 8.0 | 12.0 | Q2 |
| MSP430G2302IRSA16R | QFN | RSA | 16 | 3000 | 330.0 | 12.4 | 4.25 | 4.25 | 1.15 | 8.0 | 12.0 | Q2 |
| MSP430G2302IRSA16T | QFN | RSA | 16 | 250 | 180.0 | 12.4 | 4.25 | 4.25 | 1.15 | 8.0 | 12.0 | Q2 |
| MSP430G2302IRSA16T | QFN | RSA | 16 | 250 | 180.0 | 12.4 | 4.25 | 4.25 | 1.15 | 8.0 | 12.0 | Q2 |
| MSP430G2332IPW14R | TSSOP | PW | 14 | 2000 | 330.0 | 12.4 | 6.9 | 5.6 | 1.6 | 8.0 | 12.0 | Q1 |
| MSP430G2332IPW14R | TSSOP | PW | 14 | 2000 | 330.0 | 12.4 | 6.9 | 5.6 | 1.6 | 8.0 | 12.0 | Q1 |
| MSP430G2332IPW20R | TSSOP | PW | 20 | 2000 | 330.0 | 16.4 | 6.95 | 7.0 | 1.4 | 8.0 | 16.0 | Q1 |
| MSP430G2332IPW20R | TSSOP | PW | 20 | 2000 | 330.0 | 16.4 | 6.95 | 7.1 | 1.6 | 8.0 | 16.0 | Q1 |
| MSP430G2332IRSA16R | QFN | RSA | 16 | 3000 | 330.0 | 12.4 | 4.25 | 4.25 | 1.15 | 8.0 | 12.0 | Q2 |
| MSP430G2332IRSA16R | QFN | RSA | 16 | 3000 | 330.0 | 12.4 | 4.25 | 4.25 | 1.15 | 8.0 | 12.0 | Q2 |
| MSP430G2332IRSA16T | QFN | RSA | 16 | 250 | 180.0 | 12.4 | 4.25 | 4.25 | 1.15 | 8.0 | 12.0 | Q2 |
| MSP430G2332IRSA16T | QFN | RSA | 16 | 250 | 180.0 | 12.4 | 4.25 | 4.25 | 1.15 | 8.0 | 12.0 | Q2 |
| MSP430G2402IPW14R | TSSOP | PW | 14 | 2000 | 330.0 | 12.4 | 6.9 | 5.6 | 1.6 | 8.0 | 12.0 | Q1 |
| MSP430G2402IPW14R | TSSOP | PW | 14 | 2000 | 330.0 | 12.4 | 6.9 | 5.6 | 1.6 | 8.0 | 12.0 | Q1 |
| MSP430G2402IPW20R | TSSOP | PW | 20 | 2000 | 330.0 | 16.4 | 6.95 | 7.1 | 1.6 | 8.0 | 16.0 | Q1 |
| MSP430G2402IPW20R | TSSOP | PW | 20 | 2000 | 330.0 | 16.4 | 6.95 | 7.0 | 1.4 | 8.0 | 16.0 | Q1 |
| MSP430G2402IRSA16R | QFN | RSA | 16 | 3000 | 330.0 | 12.4 | 4.25 | 4.25 | 1.15 | 8.0 | 12.0 | Q2 |
| MSP430G2402IRSA16R | QFN | RSA | 16 | 3000 | 330.0 | 12.4 | 4.25 | 4.25 | 1.15 | 8.0 | 12.0 | Q2 |
| MSP430G2402IRSA16T | QFN | RSA | 16 | 250 | 180.0 | 12.4 | 4.25 | 4.25 | 1.15 | 8.0 | 12.0 | Q2 |
| MSP430G2402IRSA16T | QFN | RSA | 16 | 250 | 180.0 | 12.4 | 4.25 | 4.25 | 1.15 | 8.0 | 12.0 | Q2 |
| MSP430G2432IPW14R | TSSOP | PW | 14 | 2000 | 330.0 | 12.4 | 6.9 | 5.6 | 1.6 | 8.0 | 12.0 | Q1 |

| Device | Package Type | Package Drawing | Pins | SPQ | Reel Diameter (mm) | Reel Width W1 (mm) | A0 (mm) | B0 (mm) | K0 (mm) | P1 (mm) | W (mm) | Pin1 Quadrant |
|---|---|---|---|---|---|---|---|---|---|---|---|---|
| MSP430G2432IPW14R | TSSOP | PW | 14 | 2000 | 330.0 | 12.4 | 6.9 | 5.6 | 1.6 | 8.0 | 12.0 | Q1 |
| MSP430G2432IPW20R | TSSOP | PW | 20 | 2000 | 330.0 | 16.4 | 6.95 | 7.0 | 1.4 | 8.0 | 16.0 | Q1 |
| MSP430G2432IPW20R | TSSOP | PW | 20 | 2000 | 330.0 | 16.4 | 6.95 | 7.1 | 1.6 | 8.0 | 16.0 | Q1 |
| MSP430G2432IRSA16R | QFN | RSA | 16 | 3000 | 330.0 | 12.4 | 4.25 | 4.25 | 1.15 | 8.0 | 12.0 | Q2 |
| MSP430G2432IRSA16R | QFN | RSA | 16 | 3000 | 330.0 | 12.4 | 4.25 | 4.25 | 1.15 | 8.0 | 12.0 | Q2 |
| MSP430G2432IRSA16T | QFN | RSA | 16 | 250 | 180.0 | 12.4 | 4.25 | 4.25 | 1.15 | 8.0 | 12.0 | Q2 |
| MSP430G2432IRSA16T | QFN | RSA | 16 | 250 | 180.0 | 12.4 | 4.25 | 4.25 | 1.15 | 8.0 | 12.0 | Q2 |

TAPE AND REEL BOX DIMENSIONS

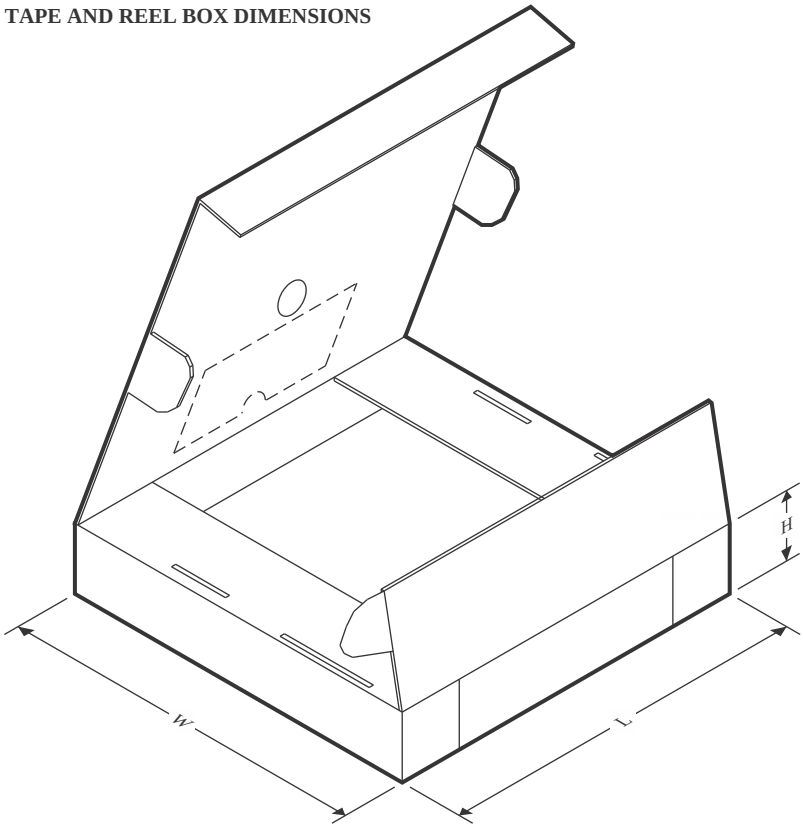


*All dimensions are nominal

| Device | Package Type | Package Drawing | Pins | SPQ | Length (mm) | Width (mm) | Height (mm) |
|---|---|---|---|---|---|---|---|
| M430G2402IPW14RG4 | TSSOP | PW | 14 | 2000 | 353.0 | 353.0 | 32.0 |
| M430G2402IRSA16RG4 | QFN | RSA | 16 | 3000 | 346.0 | 346.0 | 33.0 |
| MSP430G2102IPW14R | TSSOP | PW | 14 | 2000 | 350.0 | 350.0 | 43.0 |
| MSP430G2102IPW14R | TSSOP | PW | 14 | 2000 | 353.0 | 353.0 | 32.0 |
| MSP430G2102IPW20R | TSSOP | PW | 20 | 2000 | 353.0 | 353.0 | 32.0 |
| MSP430G2102IPW20R | TSSOP | PW | 20 | 2000 | 350.0 | 350.0 | 43.0 |
| MSP430G2102IRSA16T | QFN | RSA | 16 | 250 | 210.0 | 185.0 | 35.0 |
| MSP430G2102IRSA16T | QFN | RSA | 16 | 250 | 210.0 | 185.0 | 35.0 |
| MSP430G2132IPW14R | TSSOP | PW | 14 | 2000 | 350.0 | 350.0 | 43.0 |
| MSP430G2132IPW14R | TSSOP | PW | 14 | 2000 | 353.0 | 353.0 | 32.0 |
| MSP430G2132IPW20R | TSSOP | PW | 20 | 2000 | 353.0 | 353.0 | 32.0 |
| MSP430G2132IPW20R | TSSOP | PW | 20 | 2000 | 350.0 | 350.0 | 43.0 |
| MSP430G2132IRSA16R | QFN | RSA | 16 | 3000 | 346.0 | 346.0 | 33.0 |
| MSP430G2132IRSA16R | QFN | RSA | 16 | 3000 | 360.0 | 360.0 | 36.0 |
| MSP430G2132IRSA16T | QFN | RSA | 16 | 250 | 210.0 | 185.0 | 35.0 |
| MSP430G2132IRSA16T | QFN | RSA | 16 | 250 | 210.0 | 185.0 | 35.0 |
| MSP430G2202IPW14R | TSSOP | PW | 14 | 2000 | 353.0 | 353.0 | 32.0 |
| MSP430G2202IPW14R | TSSOP | PW | 14 | 2000 | 350.0 | 350.0 | 43.0 |

| Device | Package Type | Package Drawing | Pins | SPQ | Length (mm) | Width (mm) | Height (mm) |
|---|---|---|---|---|---|---|---|
| MSP430G2202IPW20R | TSSOP | PW | 20 | 2000 | 353.0 | 353.0 | 32.0 |
| MSP430G2202IPW20R | TSSOP | PW | 20 | 2000 | 350.0 | 350.0 | 43.0 |
| MSP430G2202IRSA16R | QFN | RSA | 16 | 3000 | 360.0 | 360.0 | 36.0 |
| MSP430G2202IRSA16R | QFN | RSA | 16 | 3000 | 346.0 | 346.0 | 33.0 |
| MSP430G2202IRSA16T | QFN | RSA | 16 | 250 | 210.0 | 185.0 | 35.0 |
| MSP430G2202IRSA16T | QFN | RSA | 16 | 250 | 210.0 | 185.0 | 35.0 |
| MSP430G2232IPW14R | TSSOP | PW | 14 | 2000 | 353.0 | 353.0 | 32.0 |
| MSP430G2232IPW14R | TSSOP | PW | 14 | 2000 | 350.0 | 350.0 | 43.0 |
| MSP430G2232IPW20R | TSSOP | PW | 20 | 2000 | 353.0 | 353.0 | 32.0 |
| MSP430G2232IPW20R | TSSOP | PW | 20 | 2000 | 350.0 | 350.0 | 43.0 |
| MSP430G2232IRSA16R | QFN | RSA | 16 | 3000 | 360.0 | 360.0 | 36.0 |
| MSP430G2232IRSA16R | QFN | RSA | 16 | 3000 | 346.0 | 346.0 | 33.0 |
| MSP430G2232IRSA16T | QFN | RSA | 16 | 250 | 210.0 | 185.0 | 35.0 |
| MSP430G2232IRSA16T | QFN | RSA | 16 | 250 | 210.0 | 185.0 | 35.0 |
| MSP430G2302IPW14R | TSSOP | PW | 14 | 2000 | 350.0 | 350.0 | 43.0 |
| MSP430G2302IPW14R | TSSOP | PW | 14 | 2000 | 353.0 | 353.0 | 32.0 |
| MSP430G2302IPW20R | TSSOP | PW | 20 | 2000 | 353.0 | 353.0 | 32.0 |
| MSP430G2302IPW20R | TSSOP | PW | 20 | 2000 | 350.0 | 350.0 | 43.0 |
| MSP430G2302IRSA16R | QFN | RSA | 16 | 3000 | 360.0 | 360.0 | 36.0 |
| MSP430G2302IRSA16R | QFN | RSA | 16 | 3000 | 346.0 | 346.0 | 33.0 |
| MSP430G2302IRSA16T | QFN | RSA | 16 | 250 | 210.0 | 185.0 | 35.0 |
| MSP430G2302IRSA16T | QFN | RSA | 16 | 250 | 210.0 | 185.0 | 35.0 |
| MSP430G2332IPW14R | TSSOP | PW | 14 | 2000 | 350.0 | 350.0 | 43.0 |
| MSP430G2332IPW14R | TSSOP | PW | 14 | 2000 | 353.0 | 353.0 | 32.0 |
| MSP430G2332IPW20R | TSSOP | PW | 20 | 2000 | 353.0 | 353.0 | 32.0 |
| MSP430G2332IPW20R | TSSOP | PW | 20 | 2000 | 350.0 | 350.0 | 43.0 |
| MSP430G2332IRSA16R | QFN | RSA | 16 | 3000 | 360.0 | 360.0 | 36.0 |
| MSP430G2332IRSA16R | QFN | RSA | 16 | 3000 | 346.0 | 346.0 | 33.0 |
| MSP430G2332IRSA16T | QFN | RSA | 16 | 250 | 210.0 | 185.0 | 35.0 |
| MSP430G2332IRSA16T | QFN | RSA | 16 | 250 | 182.0 | 182.0 | 20.0 |
| MSP430G2402IPW14R | TSSOP | PW | 14 | 2000 | 353.0 | 353.0 | 32.0 |
| MSP430G2402IPW14R | TSSOP | PW | 14 | 2000 | 350.0 | 350.0 | 43.0 |
| MSP430G2402IPW20R | TSSOP | PW | 20 | 2000 | 350.0 | 350.0 | 43.0 |
| MSP430G2402IPW20R | TSSOP | PW | 20 | 2000 | 353.0 | 353.0 | 32.0 |
| MSP430G2402IRSA16R | QFN | RSA | 16 | 3000 | 360.0 | 360.0 | 36.0 |
| MSP430G2402IRSA16R | QFN | RSA | 16 | 3000 | 346.0 | 346.0 | 33.0 |
| MSP430G2402IRSA16T | QFN | RSA | 16 | 250 | 210.0 | 185.0 | 35.0 |
| MSP430G2402IRSA16T | QFN | RSA | 16 | 250 | 210.0 | 185.0 | 35.0 |
| MSP430G2432IPW14R | TSSOP | PW | 14 | 2000 | 353.0 | 353.0 | 32.0 |
| MSP430G2432IPW14R | TSSOP | PW | 14 | 2000 | 350.0 | 350.0 | 43.0 |
| MSP430G2432IPW20R | TSSOP | PW | 20 | 2000 | 353.0 | 353.0 | 32.0 |
| MSP430G2432IPW20R | TSSOP | PW | 20 | 2000 | 350.0 | 350.0 | 43.0 |
| MSP430G2432IRSA16R | QFN | RSA | 16 | 3000 | 360.0 | 360.0 | 36.0 |

| Device | Package Type | Package Drawing | Pins | SPQ | Length (mm) | Width (mm) | Height (mm) |
|---|---|---|---|---|---|---|---|
| MSP430G2432IRSA16R | QFN | RSA | 16 | 3000 | 346.0 | 346.0 | 33.0 |
| MSP430G2432IRSA16T | QFN | RSA | 16 | 250 | 210.0 | 185.0 | 35.0 |
| MSP430G2432IRSA16T | QFN | RSA | 16 | 250 | 210.0 | 185.0 | 35.0 |

## TUBE

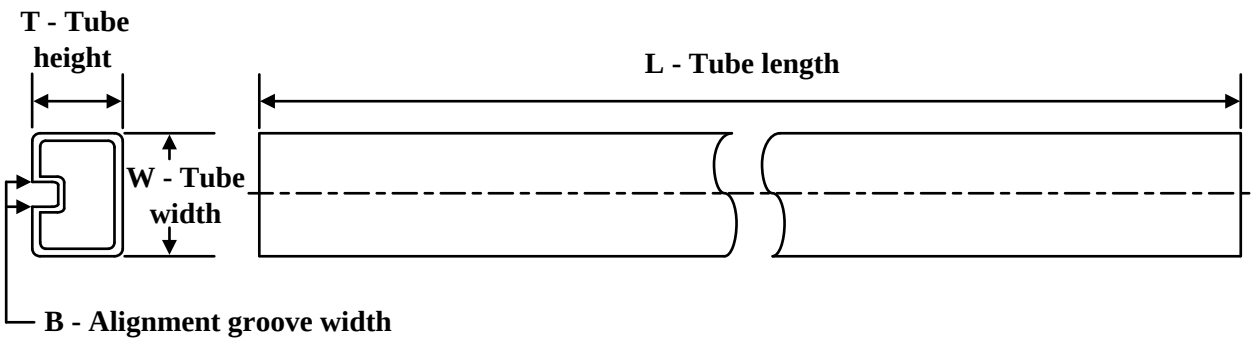


*All dimensions are nominal

| Device | Package Name | Package Type | Pins | SPQ | L (mm) | W (mm) | T (µm) | B (mm) |
|---|---|---|---|---|---|---|---|---|
| MSP430G2102IN20 | N | PDIP | 20 | 20 | 506 | 13.97 | 11230 | 4.32 |
| MSP430G2102IN20.A | N | PDIP | 20 | 20 | 506 | 13.97 | 11230 | 4.32 |
| MSP430G2102IN20.B | N | PDIP | 20 | 20 | 506 | 13.97 | 11230 | 4.32 |
| MSP430G2102IPW14 | PW | TSSOP | 14 | 90 | 530 | 10.2 | 3600 | 3.5 |
| MSP430G2102IPW14 | PW | TSSOP | 14 | 90 | 530 | 10.2 | 3600 | 3.5 |
| MSP430G2102IPW14.A | PW | TSSOP | 14 | 90 | 530 | 10.2 | 3600 | 3.5 |
| MSP430G2102IPW14.A | PW | TSSOP | 14 | 90 | 530 | 10.2 | 3600 | 3.5 |
| MSP430G2102IPW14.B | PW | TSSOP | 14 | 90 | 530 | 10.2 | 3600 | 3.5 |
| MSP430G2102IPW14.B | PW | TSSOP | 14 | 90 | 530 | 10.2 | 3600 | 3.5 |
| MSP430G2102IPW20 | PW | TSSOP | 20 | 70 | 530 | 10.2 | 3600 | 3.5 |
| MSP430G2102IPW20 | PW | TSSOP | 20 | 70 | 530 | 10.2 | 3600 | 3.5 |
| MSP430G2102IPW20.A | PW | TSSOP | 20 | 70 | 530 | 10.2 | 3600 | 3.5 |
| MSP430G2102IPW20.A | PW | TSSOP | 20 | 70 | 530 | 10.2 | 3600 | 3.5 |
| MSP430G2102IPW20.B | PW | TSSOP | 20 | 70 | 530 | 10.2 | 3600 | 3.5 |
| MSP430G2102IPW20.B | PW | TSSOP | 20 | 70 | 530 | 10.2 | 3600 | 3.5 |
| MSP430G2132IN20 | N | PDIP | 20 | 20 | 506 | 13.97 | 11230 | 4.32 |
| MSP430G2132IN20.A | N | PDIP | 20 | 20 | 506 | 13.97 | 11230 | 4.32 |
| MSP430G2132IN20.B | N | PDIP | 20 | 20 | 506 | 13.97 | 11230 | 4.32 |
| MSP430G2132IPW14 | PW | TSSOP | 14 | 90 | 530 | 10.2 | 3600 | 3.5 |
| MSP430G2132IPW14 | PW | TSSOP | 14 | 90 | 530 | 10.2 | 3600 | 3.5 |
| MSP430G2132IPW14.A | PW | TSSOP | 14 | 90 | 530 | 10.2 | 3600 | 3.5 |
| MSP430G2132IPW14.A | PW | TSSOP | 14 | 90 | 530 | 10.2 | 3600 | 3.5 |
| MSP430G2132IPW14.B | PW | TSSOP | 14 | 90 | 530 | 10.2 | 3600 | 3.5 |
| MSP430G2132IPW14.B | PW | TSSOP | 14 | 90 | 530 | 10.2 | 3600 | 3.5 |
| MSP430G2132IPW20 | PW | TSSOP | 20 | 70 | 530 | 10.2 | 3600 | 3.5 |
| MSP430G2132IPW20 | PW | TSSOP | 20 | 70 | 530 | 10.2 | 3600 | 3.5 |
| MSP430G2132IPW20.A | PW | TSSOP | 20 | 70 | 530 | 10.2 | 3600 | 3.5 |
| MSP430G2132IPW20.A | PW | TSSOP | 20 | 70 | 530 | 10.2 | 3600 | 3.5 |
| MSP430G2132IPW20.B | PW | TSSOP | 20 | 70 | 530 | 10.2 | 3600 | 3.5 |

| Device | Package Name | Package Type | Pins | SPQ | L (mm) | W (mm) | T (µm) | B (mm) |
|---|---|---|---|---|---|---|---|---|
| MSP430G2132IPW20.B | PW | TSSOP | 20 | 70 | 530 | 10.2 | 3600 | 3.5 |
| MSP430G2202IN20 | N | PDIP | 20 | 20 | 506 | 13.97 | 11230 | 4.32 |
| MSP430G2202IN20.A | N | PDIP | 20 | 20 | 506 | 13.97 | 11230 | 4.32 |
| MSP430G2202IN20.B | N | PDIP | 20 | 20 | 506 | 13.97 | 11230 | 4.32 |
| MSP430G2202IPW14 | PW | TSSOP | 14 | 90 | 530 | 10.2 | 3600 | 3.5 |
| MSP430G2202IPW14 | PW | TSSOP | 14 | 90 | 530 | 10.2 | 3600 | 3.5 |
| MSP430G2202IPW14.A | PW | TSSOP | 14 | 90 | 530 | 10.2 | 3600 | 3.5 |
| MSP430G2202IPW14.A | PW | TSSOP | 14 | 90 | 530 | 10.2 | 3600 | 3.5 |
| MSP430G2202IPW14.B | PW | TSSOP | 14 | 90 | 530 | 10.2 | 3600 | 3.5 |
| MSP430G2202IPW14.B | PW | TSSOP | 14 | 90 | 530 | 10.2 | 3600 | 3.5 |
| MSP430G2202IPW20 | PW | TSSOP | 20 | 70 | 530 | 10.2 | 3600 | 3.5 |
| MSP430G2202IPW20 | PW | TSSOP | 20 | 70 | 530 | 10.2 | 3600 | 3.5 |
| MSP430G2202IPW20.A | PW | TSSOP | 20 | 70 | 530 | 10.2 | 3600 | 3.5 |
| MSP430G2202IPW20.A | PW | TSSOP | 20 | 70 | 530 | 10.2 | 3600 | 3.5 |
| MSP430G2202IPW20.B | PW | TSSOP | 20 | 70 | 530 | 10.2 | 3600 | 3.5 |
| MSP430G2202IPW20.B | PW | TSSOP | 20 | 70 | 530 | 10.2 | 3600 | 3.5 |
| MSP430G2232IN20 | N | PDIP | 20 | 20 | 506 | 13.97 | 11230 | 4.32 |
| MSP430G2232IN20.A | N | PDIP | 20 | 20 | 506 | 13.97 | 11230 | 4.32 |
| MSP430G2232IN20.B | N | PDIP | 20 | 20 | 506 | 13.97 | 11230 | 4.32 |
| MSP430G2232IPW14 | PW | TSSOP | 14 | 90 | 530 | 10.2 | 3600 | 3.5 |
| MSP430G2232IPW14 | PW | TSSOP | 14 | 90 | 530 | 10.2 | 3600 | 3.5 |
| MSP430G2232IPW14.A | PW | TSSOP | 14 | 90 | 530 | 10.2 | 3600 | 3.5 |
| MSP430G2232IPW14.A | PW | TSSOP | 14 | 90 | 530 | 10.2 | 3600 | 3.5 |
| MSP430G2232IPW14.B | PW | TSSOP | 14 | 90 | 530 | 10.2 | 3600 | 3.5 |
| MSP430G2232IPW14.B | PW | TSSOP | 14 | 90 | 530 | 10.2 | 3600 | 3.5 |
| MSP430G2232IPW20 | PW | TSSOP | 20 | 70 | 530 | 10.2 | 3600 | 3.5 |
| MSP430G2232IPW20 | PW | TSSOP | 20 | 70 | 530 | 10.2 | 3600 | 3.5 |
| MSP430G2232IPW20.A | PW | TSSOP | 20 | 70 | 530 | 10.2 | 3600 | 3.5 |
| MSP430G2232IPW20.A | PW | TSSOP | 20 | 70 | 530 | 10.2 | 3600 | 3.5 |
| MSP430G2232IPW20.B | PW | TSSOP | 20 | 70 | 530 | 10.2 | 3600 | 3.5 |
| MSP430G2232IPW20.B | PW | TSSOP | 20 | 70 | 530 | 10.2 | 3600 | 3.5 |
| MSP430G2302IN20 | N | PDIP | 20 | 20 | 506 | 13.97 | 11230 | 4.32 |
| MSP430G2302IN20.A | N | PDIP | 20 | 20 | 506 | 13.97 | 11230 | 4.32 |
| MSP430G2302IN20.B | N | PDIP | 20 | 20 | 506 | 13.97 | 11230 | 4.32 |
| MSP430G2302IPW14 | PW | TSSOP | 14 | 90 | 530 | 10.2 | 3600 | 3.5 |
| MSP430G2302IPW14 | PW | TSSOP | 14 | 90 | 530 | 10.2 | 3600 | 3.5 |
| MSP430G2302IPW14.A | PW | TSSOP | 14 | 90 | 530 | 10.2 | 3600 | 3.5 |
| MSP430G2302IPW14.A | PW | TSSOP | 14 | 90 | 530 | 10.2 | 3600 | 3.5 |
| MSP430G2302IPW14.B | PW | TSSOP | 14 | 90 | 530 | 10.2 | 3600 | 3.5 |
| MSP430G2302IPW14.B | PW | TSSOP | 14 | 90 | 530 | 10.2 | 3600 | 3.5 |
| MSP430G2302IPW20 | PW | TSSOP | 20 | 70 | 530 | 10.2 | 3600 | 3.5 |
| MSP430G2302IPW20 | PW | TSSOP | 20 | 70 | 530 | 10.2 | 3600 | 3.5 |
| MSP430G2302IPW20.A | PW | TSSOP | 20 | 70 | 530 | 10.2 | 3600 | 3.5 |

| Device | Package Name | Package Type | Pins | SPQ | L (mm) | W (mm) | T (µm) | B (mm) |
|---|---|---|---|---|---|---|---|---|
| MSP430G2302IPW20.A | PW | TSSOP | 20 | 70 | 530 | 10.2 | 3600 | 3.5 |
| MSP430G2302IPW20.B | PW | TSSOP | 20 | 70 | 530 | 10.2 | 3600 | 3.5 |
| MSP430G2302IPW20.B | PW | TSSOP | 20 | 70 | 530 | 10.2 | 3600 | 3.5 |
| MSP430G2332IN20 | N | PDIP | 20 | 20 | 506 | 13.97 | 11230 | 4.32 |
| MSP430G2332IN20.A | N | PDIP | 20 | 20 | 506 | 13.97 | 11230 | 4.32 |
| MSP430G2332IN20.B | N | PDIP | 20 | 20 | 506 | 13.97 | 11230 | 4.32 |
| MSP430G2332IPW14 | PW | TSSOP | 14 | 90 | 530 | 10.2 | 3600 | 3.5 |
| MSP430G2332IPW14 | PW | TSSOP | 14 | 90 | 530 | 10.2 | 3600 | 3.5 |
| MSP430G2332IPW14.A | PW | TSSOP | 14 | 90 | 530 | 10.2 | 3600 | 3.5 |
| MSP430G2332IPW14.A | PW | TSSOP | 14 | 90 | 530 | 10.2 | 3600 | 3.5 |
| MSP430G2332IPW14.B | PW | TSSOP | 14 | 90 | 530 | 10.2 | 3600 | 3.5 |
| MSP430G2332IPW14.B | PW | TSSOP | 14 | 90 | 530 | 10.2 | 3600 | 3.5 |
| MSP430G2332IPW20 | PW | TSSOP | 20 | 70 | 530 | 10.2 | 3600 | 3.5 |
| MSP430G2332IPW20 | PW | TSSOP | 20 | 70 | 530 | 10.2 | 3600 | 3.5 |
| MSP430G2332IPW20.A | PW | TSSOP | 20 | 70 | 530 | 10.2 | 3600 | 3.5 |
| MSP430G2332IPW20.A | PW | TSSOP | 20 | 70 | 530 | 10.2 | 3600 | 3.5 |
| MSP430G2332IPW20.B | PW | TSSOP | 20 | 70 | 530 | 10.2 | 3600 | 3.5 |
| MSP430G2332IPW20.B | PW | TSSOP | 20 | 70 | 530 | 10.2 | 3600 | 3.5 |
| MSP430G2402IN20 | N | PDIP | 20 | 20 | 506 | 13.97 | 11230 | 4.32 |
| MSP430G2402IN20.A | N | PDIP | 20 | 20 | 506 | 13.97 | 11230 | 4.32 |
| MSP430G2402IN20.B | N | PDIP | 20 | 20 | 506 | 13.97 | 11230 | 4.32 |
| MSP430G2402IPW14 | PW | TSSOP | 14 | 90 | 530 | 10.2 | 3600 | 3.5 |
| MSP430G2402IPW14 | PW | TSSOP | 14 | 90 | 530 | 10.2 | 3600 | 3.5 |
| MSP430G2402IPW14.A | PW | TSSOP | 14 | 90 | 530 | 10.2 | 3600 | 3.5 |
| MSP430G2402IPW14.A | PW | TSSOP | 14 | 90 | 530 | 10.2 | 3600 | 3.5 |
| MSP430G2402IPW14.B | PW | TSSOP | 14 | 90 | 530 | 10.2 | 3600 | 3.5 |
| MSP430G2402IPW14.B | PW | TSSOP | 14 | 90 | 530 | 10.2 | 3600 | 3.5 |
| MSP430G2402IPW20 | PW | TSSOP | 20 | 70 | 530 | 10.2 | 3600 | 3.5 |
| MSP430G2402IPW20 | PW | TSSOP | 20 | 70 | 530 | 10.2 | 3600 | 3.5 |
| MSP430G2402IPW20.A | PW | TSSOP | 20 | 70 | 530 | 10.2 | 3600 | 3.5 |
| MSP430G2402IPW20.A | PW | TSSOP | 20 | 70 | 530 | 10.2 | 3600 | 3.5 |
| MSP430G2402IPW20.B | PW | TSSOP | 20 | 70 | 530 | 10.2 | 3600 | 3.5 |
| MSP430G2402IPW20.B | PW | TSSOP | 20 | 70 | 530 | 10.2 | 3600 | 3.5 |
| MSP430G2432IN20 | N | PDIP | 20 | 20 | 506 | 13.97 | 11230 | 4.32 |
| MSP430G2432IN20.A | N | PDIP | 20 | 20 | 506 | 13.97 | 11230 | 4.32 |
| MSP430G2432IN20.B | N | PDIP | 20 | 20 | 506 | 13.97 | 11230 | 4.32 |
| MSP430G2432IPW14 | PW | TSSOP | 14 | 90 | 530 | 10.2 | 3600 | 3.5 |
| MSP430G2432IPW14 | PW | TSSOP | 14 | 90 | 530 | 10.2 | 3600 | 3.5 |
| MSP430G2432IPW14.A | PW | TSSOP | 14 | 90 | 530 | 10.2 | 3600 | 3.5 |
| MSP430G2432IPW14.A | PW | TSSOP | 14 | 90 | 530 | 10.2 | 3600 | 3.5 |
| MSP430G2432IPW14.B | PW | TSSOP | 14 | 90 | 530 | 10.2 | 3600 | 3.5 |
| MSP430G2432IPW14.B | PW | TSSOP | 14 | 90 | 530 | 10.2 | 3600 | 3.5 |
| MSP430G2432IPW20 | PW | TSSOP | 20 | 70 | 530 | 10.2 | 3600 | 3.5 |

| Device | Package Name | Package Type | Pins | SPQ | L (mm) | W (mm) | T (µm) | B (mm) |
|---|---|---|---|---|---|---|---|---|
| MSP430G2432IPW20 | PW | TSSOP | 20 | 70 | 530 | 10.2 | 3600 | 3.5 |
| MSP430G2432IPW20.A | PW | TSSOP | 20 | 70 | 530 | 10.2 | 3600 | 3.5 |
| MSP430G2432IPW20.A | PW | TSSOP | 20 | 70 | 530 | 10.2 | 3600 | 3.5 |
| MSP430G2432IPW20.B | PW | TSSOP | 20 | 70 | 530 | 10.2 | 3600 | 3.5 |
| MSP430G2432IPW20.B | PW | TSSOP | 20 | 70 | 530 | 10.2 | 3600 | 3.5 |

## N (R–PDIP–T**) PLASTIC DUAL–IN–LINE PACKAGE

16 PINS SHOWN

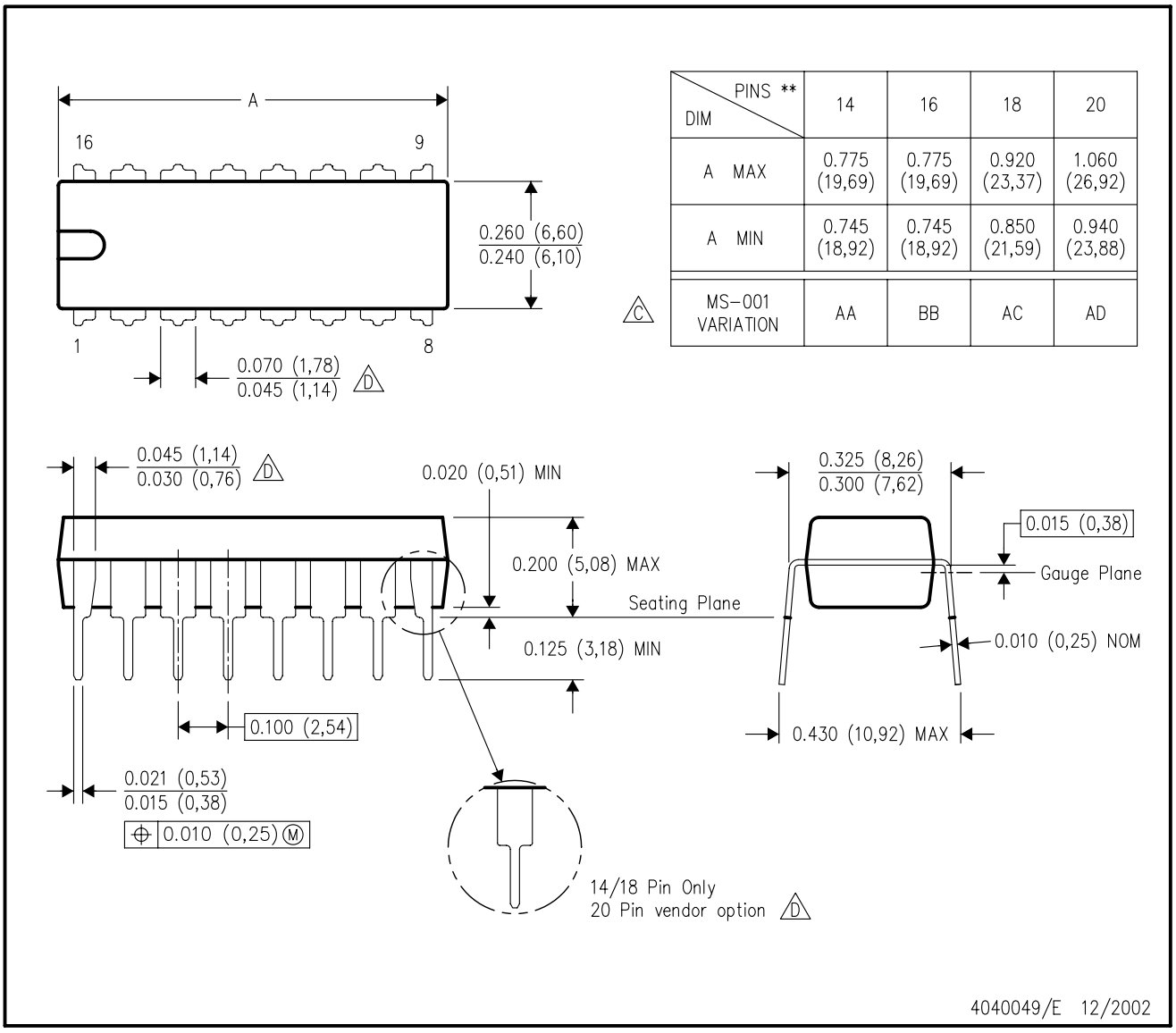


| DIM \ PINS ** | 14 | 16 | 18 | 20 |
|---|---|---|---|---|
| A MAX | 0.775 (19,69) | 0.775 (19,69) | 0.920 (23,37) | 1.060 (26,92) |
| A MIN | 0.745 (18,92) | 0.745 (18,92) | 0.850 (21,59) | 0.940 (23,88) |
| MS–001 VARIATION (C) | AA | BB | AC | AD |

NOTES:
A. All linear dimensions are in inches (millimeters).
B. This drawing is subject to change without notice.
C. Falls within JEDEC MS–001, except 18 and 20 pin minimum body length (Dim A).
D. The 20 pin end lead shoulder width is a vendor option, either half or full width.

# PW0014A

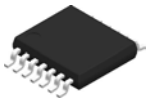

# PACKAGE OUTLINE

## TSSOP - 1.2 mm max height

SMALL OUTLINE PACKAGE

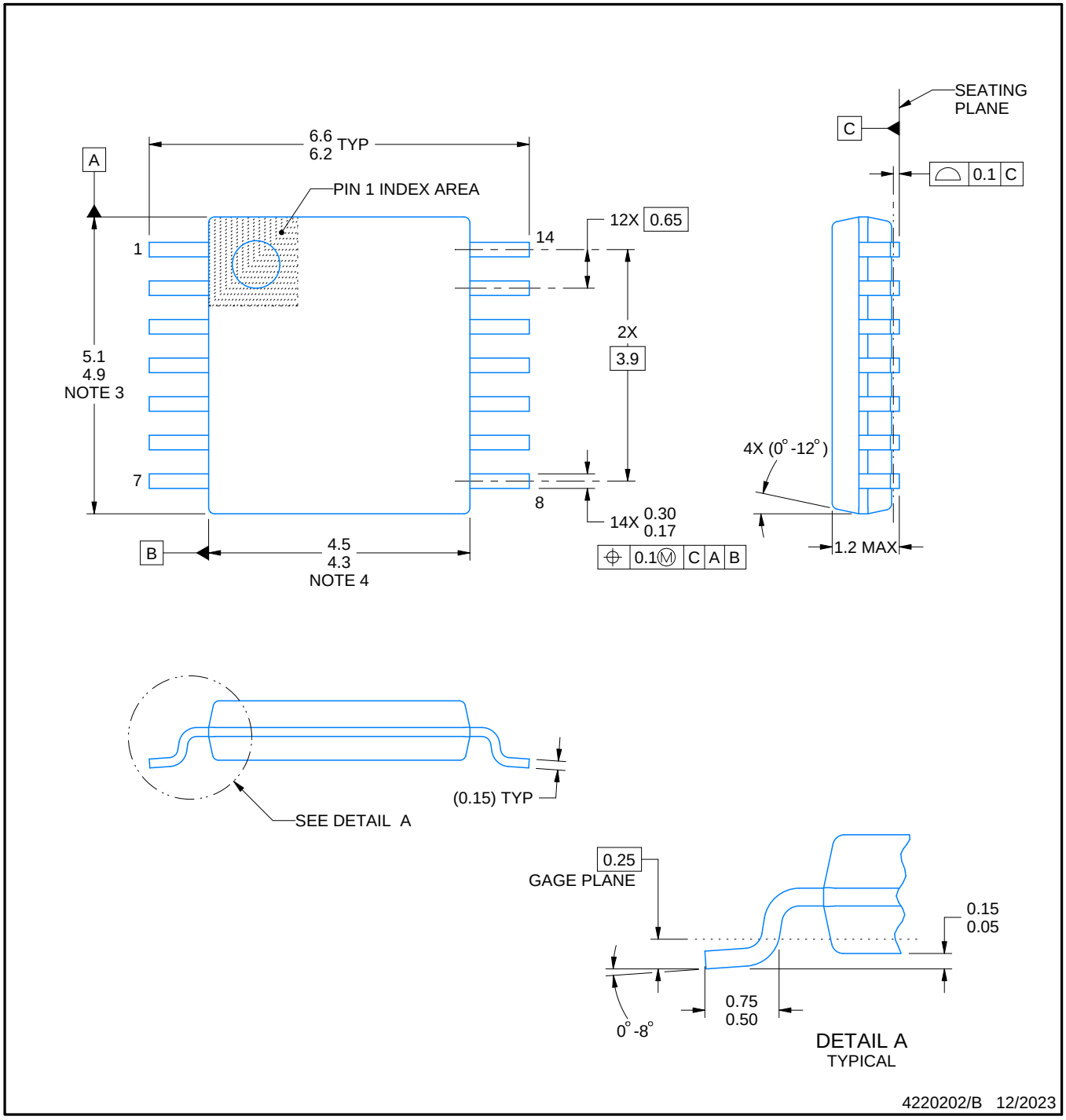


NOTES:

1. All linear dimensions are in millimeters. Any dimensions in parenthesis are for reference only. Dimensioning and tolerancing per ASME Y14.5M.
2. This drawing is subject to change without notice.
3. This dimension does not include mold flash, protrusions, or gate burrs. Mold flash, protrusions, or gate burrs shall not exceed 0.15 mm per side.
4. This dimension does not include interlead flash. Interlead flash shall not exceed 0.25 mm per side.
5. Reference JEDEC registration MO-153.

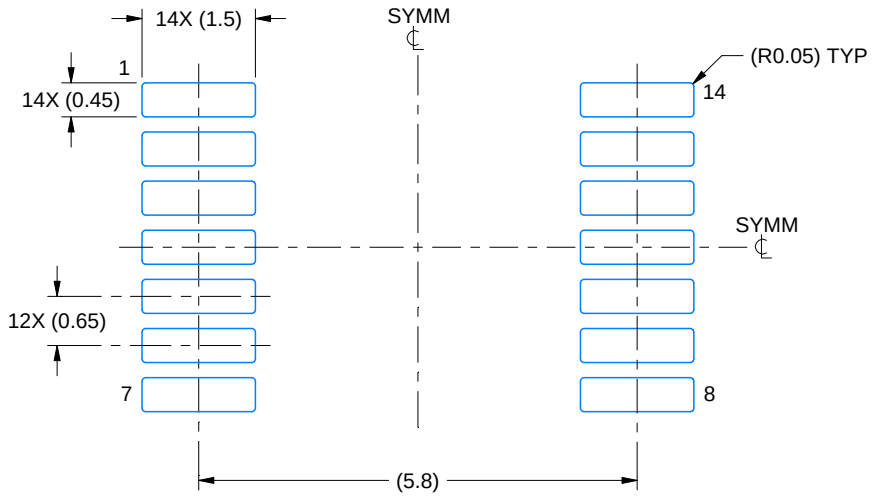


LAND PATTERN EXAMPLE
EXPOSED METAL SHOWN
SCALE: 10X

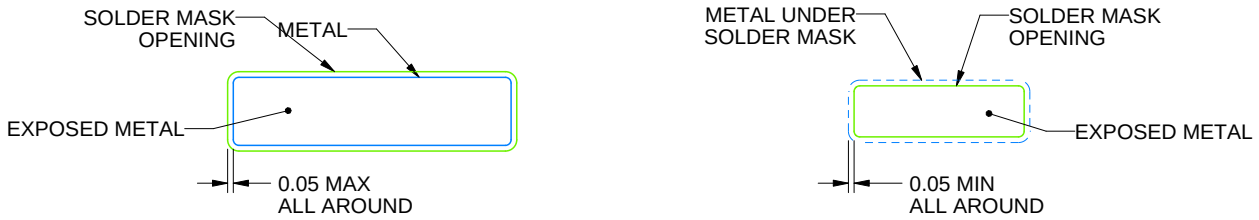


NON-SOLDER MASK DEFINED (PREFERRED)

SOLDER MASK DEFINED

SOLDER MASK DETAILS

4220202/B 12/2023

NOTES: (continued)

6. Publication IPC-7351 may have alternate designs.
7. Solder mask tolerances between and around signal pads can vary based on board fabrication site.

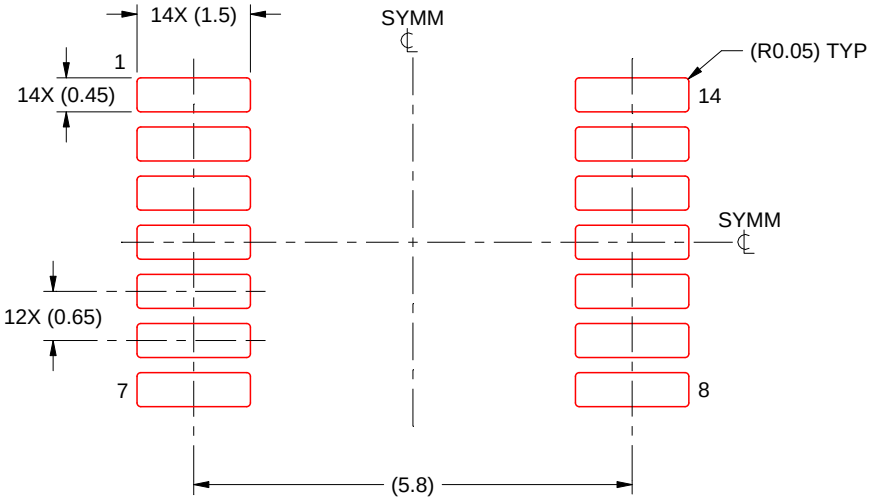


SOLDER PASTE EXAMPLE
BASED ON 0.125 mm THICK STENCIL
SCALE: 10X

4220202/B 12/2023

NOTES: (continued)

8. Laser cutting apertures with trapezoidal walls and rounded corners may offer better paste release. IPC-7525 may have alternate design recommendations.
9. Board assembly site may have different recommendations for stencil design.

# GENERIC PACKAGE VIEW

## RSA 16

## VQFN - 1 mm max height

**4 x 4, 0.65 mm pitch**

PLASTIC QUAD FLATPACK - NO LEAD

This image is a representation of the package family, actual package may vary.
Refer to the product data sheet for package details.

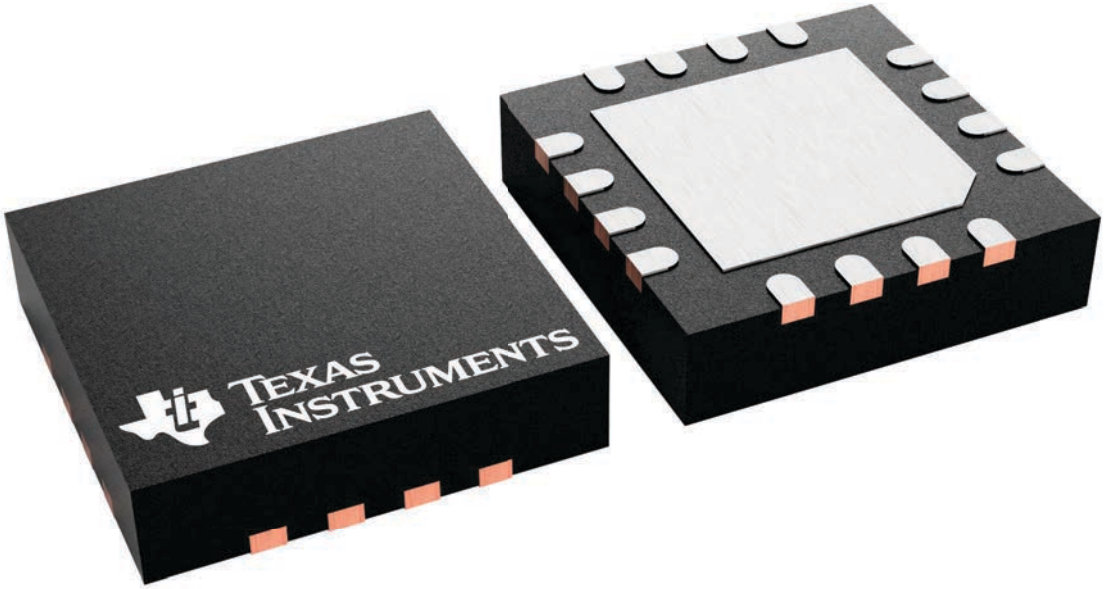


4230969/A

# RSA0016B

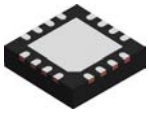

# PACKAGE OUTLINE

## VQFN - 1 mm max height

PLASTIC QUAD FLATPACK - NO LEAD

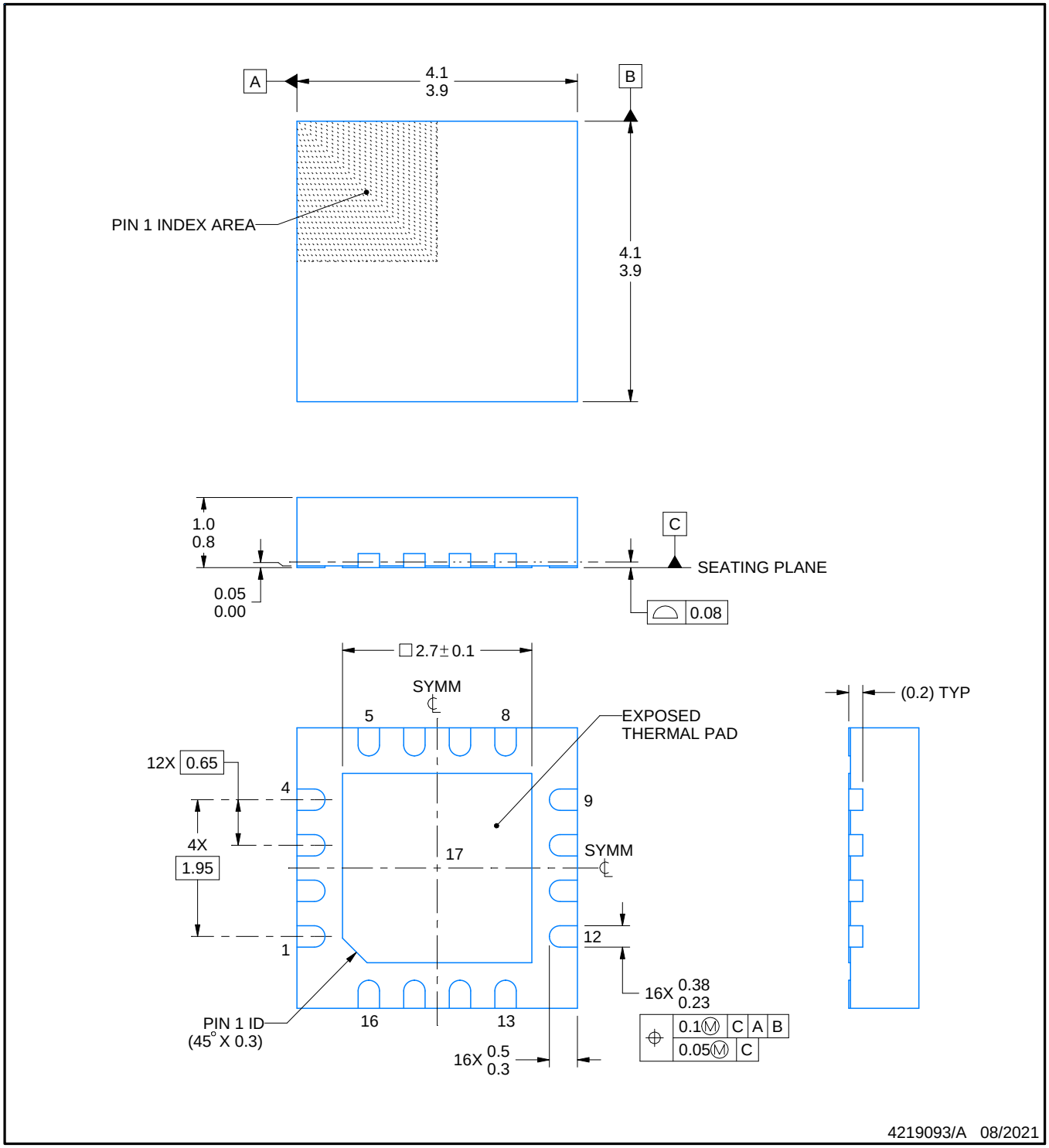


NOTES:

1. All linear dimensions are in millimeters. Any dimensions in parenthesis are for reference only. Dimensioning and tolerancing per ASME Y14.5M.
2. This drawing is subject to change without notice.
3. The package thermal pad must be soldered to the printed circuit board for thermal and mechanical performance.
4. Reference JEDEC registration MO-220.

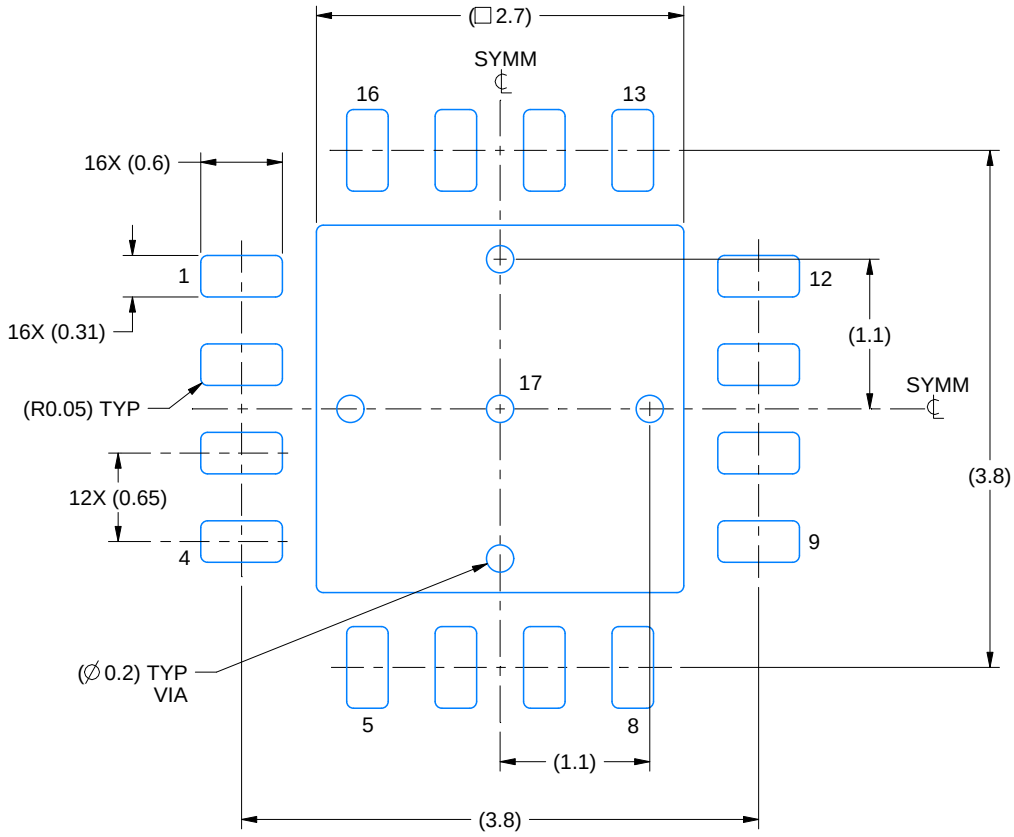


LAND PATTERN EXAMPLE
EXPOSED METAL SHOWN
SCALE:18X

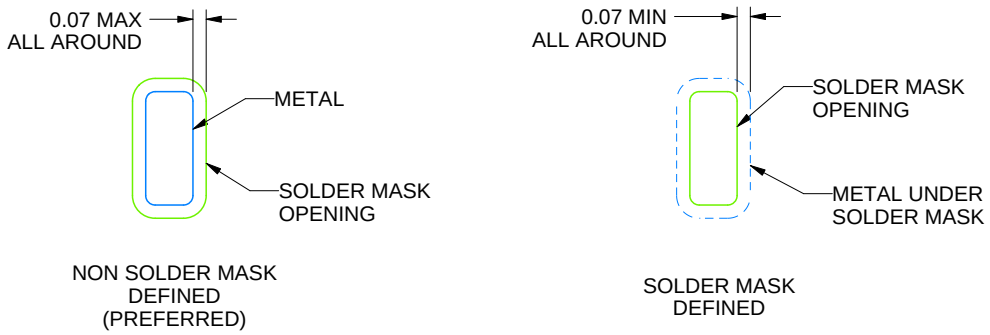


SOLDER MASK DETAILS

4219093/A 08/2021

NOTES: (continued)

5. This package is designed to be soldered to a thermal pad on the board. For more information, see Texas Instruments literature number SLUA271 (www.ti.com/lit/slua271).
6. Vias are optional depending on application, refer to device data sheet. If any vias are implemented, refer to their locations shown on this view. It is recommended that vias under paste be filled, plugged or tented.

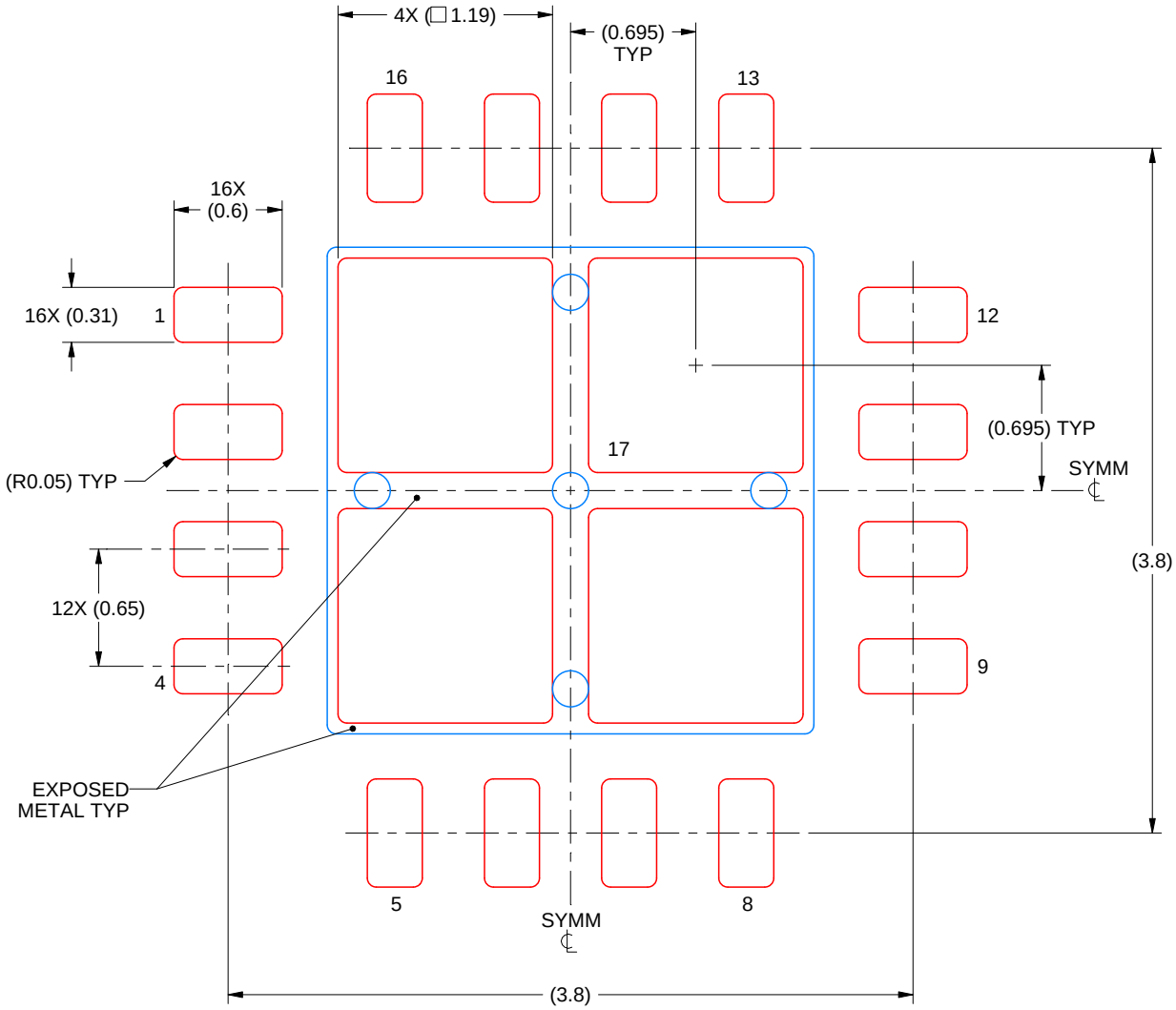


SOLDER PASTE EXAMPLE
BASED ON 0.125 mm THICK STENCIL

EXPOSED PAD
77% PRINTED SOLDER COVERAGE BY AREA
SCALE:25X

4219093/A 08/2021

NOTES: (continued)

7. Laser cutting apertures with trapezoidal walls and rounded corners may offer better paste release. IPC-7525 may have alternate design recommendations.

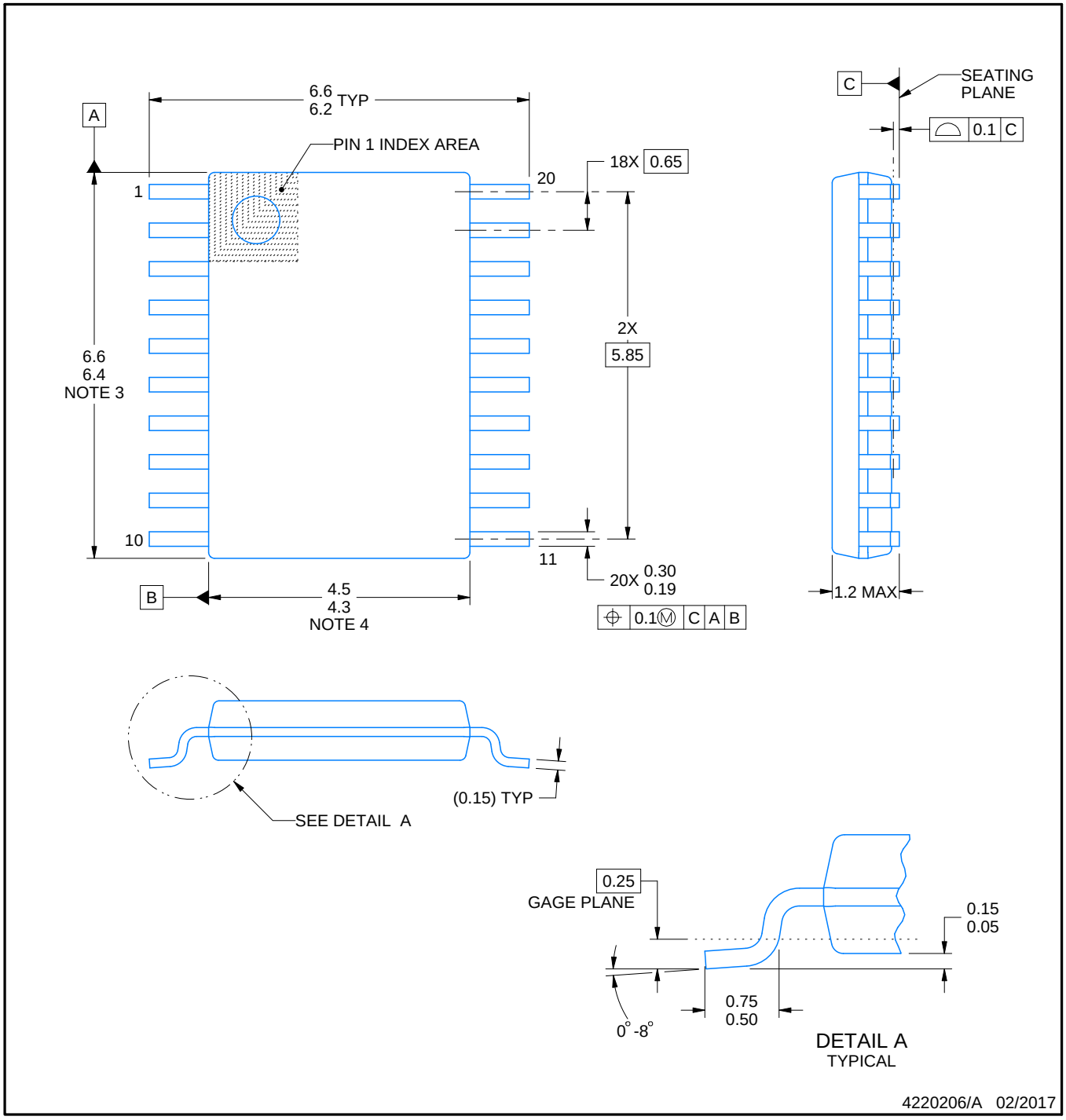


NOTES:

1. All linear dimensions are in millimeters. Any dimensions in parenthesis are for reference only. Dimensioning and tolerancing per ASME Y14.5M.
2. This drawing is subject to change without notice.
3. This dimension does not include mold flash, protrusions, or gate burrs. Mold flash, protrusions, or gate burrs shall not exceed 0.15 mm per side.
4. This dimension does not include interlead flash. Interlead flash shall not exceed 0.25 mm per side.
5. Reference JEDEC registration MO-153.

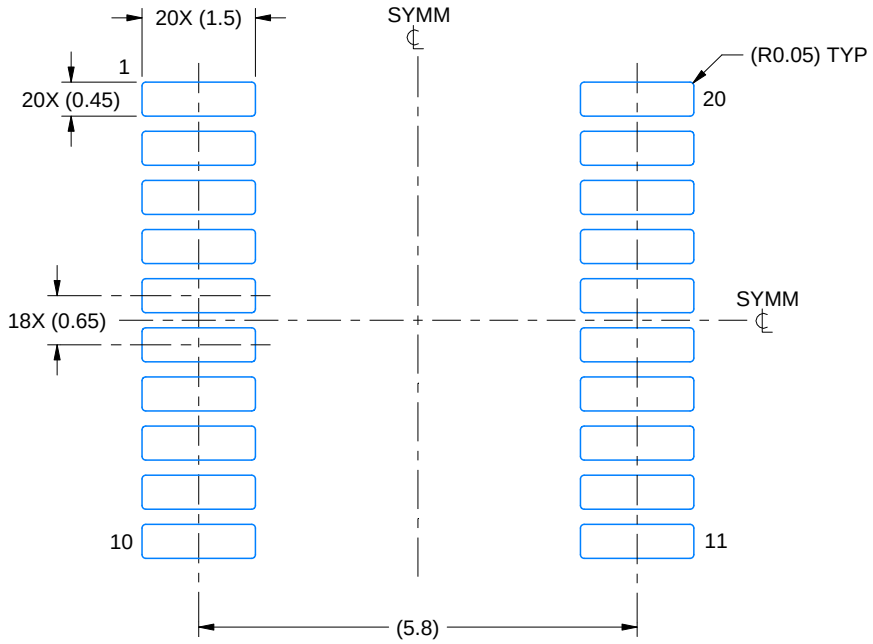


LAND PATTERN EXAMPLE
EXPOSED METAL SHOWN
SCALE: 10X

NON-SOLDER MASK DEFINED (PREFERRED)

SOLDER MASK DEFINED

SOLDER MASK DETAILS

4220206/A 02/2017

NOTES: (continued)

6. Publication IPC-7351 may have alternate designs.
7. Solder mask tolerances between and around signal pads can vary based on board fabrication site.

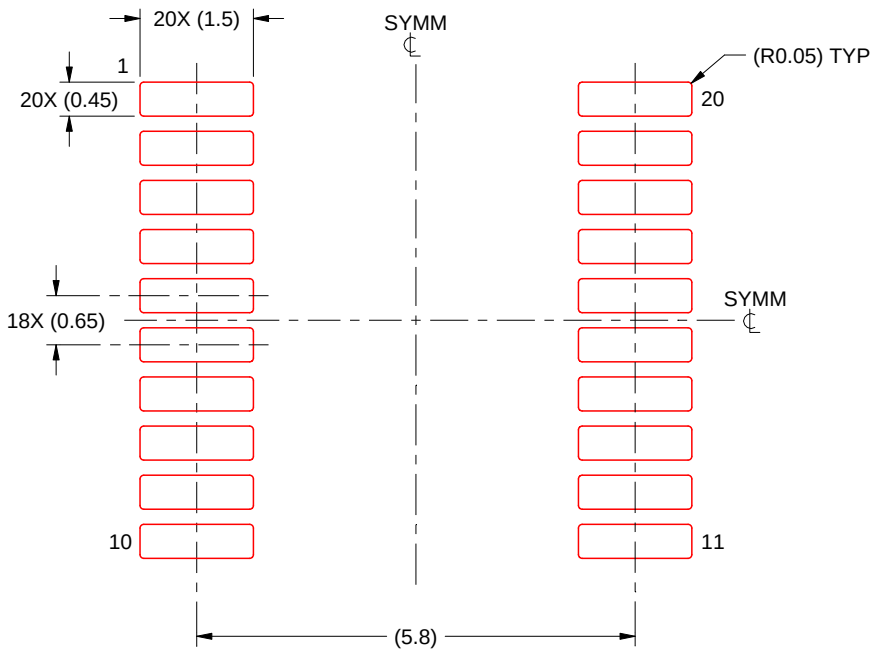


SOLDER PASTE EXAMPLE
BASED ON 0.125 mm THICK STENCIL
SCALE: 10X

4220206/A 02/2017

NOTES: (continued)

8. Laser cutting apertures with trapezoidal walls and rounded corners may offer better paste release. IPC-7525 may have alternate design recommendations.
9. Board assembly site may have different recommendations for stencil design.

# IMPORTANT NOTICE AND DISCLAIMER

TI PROVIDES TECHNICAL AND RELIABILITY DATA (INCLUDING DATASHEETS), DESIGN RESOURCES (INCLUDING REFERENCE DESIGNS), APPLICATION OR OTHER DESIGN ADVICE, WEB TOOLS, SAFETY INFORMATION, AND OTHER RESOURCES “AS IS” AND WITH ALL FAULTS, AND DISCLAIMS ALL WARRANTIES, EXPRESS AND IMPLIED, INCLUDING WITHOUT LIMITATION ANY IMPLIED WARRANTIES OF MERCHANTABILITY, FITNESS FOR A PARTICULAR PURPOSE OR NON-INFRINGEMENT OF THIRD PARTY INTELLECTUAL PROPERTY RIGHTS.

These resources are intended for skilled developers designing with TI products. You are solely responsible for (1) selecting the appropriate TI products for your application, (2) designing, validating and testing your application, and (3) ensuring your application meets applicable standards, and any other safety, security, regulatory or other requirements.

These resources are subject to change without notice. TI grants you permission to use these resources only for development of an application that uses the TI products described in the resource. Other reproduction and display of these resources is prohibited. No license is granted to any other TI intellectual property right or to any third party intellectual property right. TI disclaims responsibility for, and you fully indemnify TI and its representatives against any claims, damages, costs, losses, and liabilities arising out of your use of these resources.

TI’s products are provided subject to TI’s Terms of Sale, TI’s General Quality Guidelines, or other applicable terms available either on ti.com or provided in conjunction with such TI products. TI’s provision of these resources does not expand or otherwise alter TI’s applicable warranties or warranty disclaimers for TI products. Unless TI explicitly designates a product as custom or customer-specified, TI products are standard, catalog, general purpose devices.

TI objects to and rejects any additional or different terms you may propose.

Copyright © 2026, Texas Instruments Incorporated

Last updated 10/2025