MSPM0G511x Mixed-Signal Microcontrollers With USB 2.0-FS Interface

1 Features

- **Core**
  - Arm® 32-bit Cortex®-M0+ CPU with memory protection unit, frequency up to 80 MHz
- PSA-L1 Certification targeted
- **Operating characteristics**
  - Extended temperature: –40°C up to 125°C
  - Wide supply voltage range: 1.62V to 3.6V
- **Memories**
  - Up to 128KB of flash memory with error correction code (ECC)
    - Dual-bank with address swap for OTA updates
  - 8KB data flash bank with ECC protection
  - Up to 32kB SRAM with ECC protection or hardware parity
- **High-performance analog peripherals**
  - One 12-bit 1.6Msps analog-to-digital converter (ADC) with up to 26 external channels
    - Configurable 1.6Msps with VREF1 or 0.9Msps with VREF2
    - 14-bit effective resolution at 100ksps with hardware averaging
  - One high-speed comparator (COMP) with integrated 8-bit reference DAC
    - 32ns propagation delay in high-speed mode
    - Support low-power mode operation down to <1µA
  - Programmable analog connections between ADC and COMP
  - Two voltage references (VREF)
    - VREF1: Configurable 1.4V or 2.5V internal voltage reference (with external VREF cap)
    - VREF2: Configurable 1.4V or 2.5V internal voltage reference (cap-less)
  - Integrated temperature sensor
- **Optimized low-power modes**
  - RUN: 103µA/MHz (CoreMark)
  - SLEEP: 34µA/MHz
  - STOP: 199µA at 4MHz
  - STANDBY: 1.5µA at 32kHz with RTC and full SRAM and state retention
  - SHUTDOWN: 88nA with IO wake-up capability
- **Intelligent digital peripherals**
  - 12-channel DMA controller
  - Four timers support up to 14 PWM channels
    - Two 16-bit general-purpose timers
    - One 16-bit general-purpose timer supports low-power operation in STANDBY mode
    - One 16-bit advanced timer with deadband support and complimentary outputs up to 8 PWM channels
  - One basic software timer including 4 independent configurable 16-bit counters
    - Ability to daisy-chain 2 of the 16-bit counters to form a 32-bit counter
    - Ability to generate 2x interrupt driven PWMs
  - Two windowed watchdog timers (WWDT), one independent watchdog timer (IWDT)
  - RTC with alarm and calendar mode
- **Enhanced communication interfaces**
  - Four configurable serial interfaces (UNICOMM)
    - Two supporting UART (LIN) or I^2C (SMBus/PMBus)
    - One supporting UART or SPI
    - One supporting SPI interface up to 32Mbits/s
  - One USB2.0 interface supports full-speed (12-Mbps) compliant device and host mode functionality
    - Crystal-less USB device operation
    - Up to 8 bi-directional endpoints
  - One digital audio interface supporting several standardized serial interfaces to audio device
    - Transfer modes support
      - Controller transmitter / receiver
      - Target transmitter / receiver
    - Formats support
      - Standard (UM11732) I2S
      - Codec LSB / MSB Justified
      - DSP serial interface format that supports up to eight audio channels per data pin
      - PCM (short and long frame)
      - TDM Classic/I2S/Left Justified/Right Justified Formats up to 8 slots per frame
- **Clock system**
  - Internal 4 to 32MHz oscillator (SYSOSC) with up to ±1.2% accuracy
  - Phase-locked loop (PLL) up to 80 MHz
  - Internal 60MHz USB FLL oscillator with ±0.25% accuracy
  - Internal 32kHz low-frequency oscillator (LFOSC) with ±3% accuracy
  - External 4 to 48MHz crystal oscillator (HFXT)
  - External 32kHz crystal oscillator (LFXT)
  - External clock input
- **Security**
  - AES accelerator with support for GCM/GMAC, CCM/CBC-MAC, CBC, CTR
  - Secure key storage for up to four AES keys

An IMPORTANT NOTICE at the end of this data sheet addresses availability, warranty, changes, use in safety-critical applications, intellectual property matters and other important disclaimers. UNLESS OTHERWISE NOTED, this document contains PRODUCTION DATA.

  - Flexible firewalls for protecting code and data
  - Cyclic redundancy checker (CRC-16, CRC-32)
- **Flexible I/O features**
  - Up to 59 total GPIOs
    - Two 5V-tolerant open-drain IOs
    - Three high-drive IOs with 20mA drive strength
    - Two high-speed IOs
- **Development support**
  - 2-pin serial wire debug (SWD)
- **Package options**
  - 64-pin LQFP (PM) (0.5mm pitch)
  - 48-pin LQFP (PT) (0.5mm pitch)
  - 48-pin VQFN (RGZ) (0.5mm pitch)
  - 32-pin VQFN (RHB) (0.5mm pitch)
  - 28-pin DSBGA (YCJ) (0.35mm pitch) - Preview
  - 28-pin WQFN (RUY) (0.4mm pitch)
  - 24-pin VQFN (RGE) (0.5mm pitch)
  - 20-pin VSSOP (DGS) (0.5mm pitch)
- **Family members** (also see *Device Comparison*)
  - MSPM0G5117: 128KB flash, 32KB RAM
  - MSPM0G5116: 64KB flash, 32KB RAM
  - MSPM0G5115: 32KB flash, 16KB RAM
- **Development kits and software** (also see *Tools and Software*)
  - LP-MSPM0G5187 LaunchPad™ development kit
  - MSPM0 Software Development Kit (SDK)

2 Applications

- Home Appliances
- Medical and Healthcare
- Building Automation
- Grid Infrastructure
- Mobile Phones
- Wearables
- PC Keyboard and Mouse
- E-cigarettes

3 Description

MSPM0G511x microcontrollers (MCUs) are part of the MSP highly integrated, ultra-low-power 32-bit MCU family based on the enhanced Arm® Cortex®-M0+ 32-bit core platform, operating at up to 80MHz frequency. These MCUs offer a blend of cost optimization and design flexibility for applications requiring up to 128KB of flash memory in small packages or high pin count packages (up to 64 pins). These devices include USB2.0-FS interface, digital audio interface, cybersecurity enablers, high performance integrated analog, and provide excellent low power performance across the operating temperature range.

Up to 128KB of embedded flash program memory with built-in error correction code (ECC) and up to 32KB SRAM with ECC and parity protection is provided. The flash memory is organized into two main banks to support field firmware updates, with address swap support provided between the two main banks.

A USB 2.0 full-speed interface (with integrated PHY, clock source, and termination resistors) is provided to support compliant host-mode and crystal-less device-mode functionality. Four configurable serial interface modules (UNICOMM) are provided, supporting up to three UART, two I2C, or two SPI. A digital audio interface is provided for a variety of audio applications and support multiple protocols such as I2S and TDM.

Flexible cybersecurity enablers can be used to support secure boot, secure in-field firmware updates, IP protection (execute-only memory), key storage, and more. Hardware acceleration is provided for a variety of AES symmetric cipher modes. The cybersecurity architecture is pending Arm® PSA Level 1 certification.

A set of high performance analog modules is provided, such as one sampling 12-bit 1.6Msps ADCs supporting up to 26 external channels, two on-chip voltage references (1.4V or 2.5V), and one high speed comparator with built-in 8-bit reference DAC.

The TI MSPM0 family of low-power MCUs consists of devices with varying degrees of analog and digital integration allowing for customers find the MCU that meets their project's needs. The MSPM0 MCU platform combines the Arm Cortex-M0+ platform with a holistic ultra-low-power system architecture, allowing system designers to increase performance while reducing energy consumption.

MSPM0G511x MCUs are supported by an extensive hardware and software ecosystem with reference designs and code examples to get the design started quickly. Development kits include a LaunchPad available for purchase. TI also provides a free MSPM0 Software Development Kit (SDK), which is available as a component of Code Composer Studio™ IDE desktop and cloud version within the TI Resource Explorer. MSPM0 MCUs are also supported by extensive online collateral, training with MSP Academy, and online support through the TI E2E™ support forums.

Copyright © 2025 Texas Instruments Incorporated

For complete module descriptions, see the *MSPM0 G-Series 80-MHz Microcontrollers Technical Reference Manual*.

CAUTION

System-level ESD protection must be applied in compliance with the device-level ESD specification to prevent electrical overstress or disturbing of data or code memory. See *MSP430™ System-Level ESD Considerations* for more information. The principles in this application note are applicable to MSPM0 MCUs.

Device Information

PART NUMBER	PACKAGE(1)	PACKAGE SIZE(2)
MSPM0G5115SPMR	PM (LQFP, 64)	12mm x 12mm
MSPM0G5116SPMR		
MSPM0G5117SPMR		
MSPM0G5115SPTR	PT (LQFP, 48)	9mm x 9mm
MSPM0G5116SPTR		
MSPM0G5117SPTR		
MSPM0G5115SRGZR	RGZ (VQFN, 48)	7mm x 7mm
MSPM0G5116SRGZR		
MSPM0G5117SRGZR		
MSPM0G5115SRHBR	RHB (VQFN, 32)	5mm x 5mm
MSPM0G5116SRHBR		
MSPM0G5117SRHBR		
MSPM0G5115S28YCJR	YCJ (DSBGA, 28)	2.556mm x 1.637mm
MSPM0G5116S28YCJR		
MSPM0G5117S28YCJR		
MSPM0G5115SRUYR	RUY (WQFN, 28)	4mm x 4mm
MSPM0G5116SRUYR		
MSPM0G5117SRUYR		
MSPM0G5115SRGER	RGE (VQFN, 24)	4mm x 4mm
MSPM0G5116SRGER		
MSPM0G5117SRGER		
MSPM0G5115SDGS20R	DGS (VSSOP, 20)	5.1mm x 4.9mm
MSPM0G5116SDGS20R		
MSPM0G5117SDGS20R		

(1) For more information, see Section 12.
(2) The package size (length x width) is a nominal value and includes pins, where applicable

4 Functional Block Diagram

Figure 4-1 shows the MSPM0G511x functional block diagram.

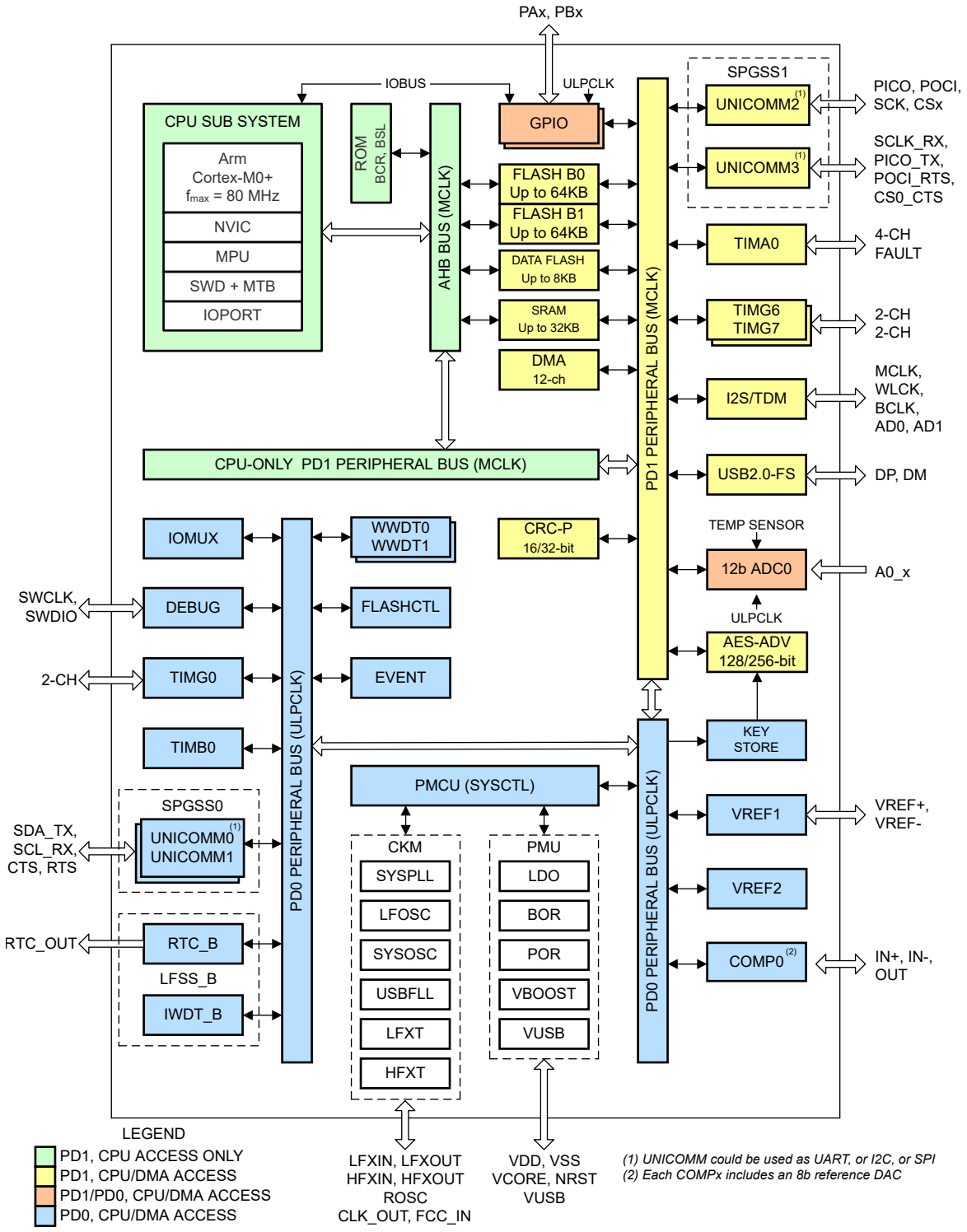

Figure 4-1. MSPM0G511x Functional Block Diagram

Copyright © 2025 Texas Instruments Incorporated

Table of Contents

1 Features....1
2 Applications....2
3 Description....2
4 Functional Block Diagram....4
5 Device Comparison....6
5.1 Device Comparison Chart....7
6 Pin Configuration and Functions....8
6.1 Pin Diagrams....8
6.2 Pin Attributes....13
6.3 Signal Descriptions....25
6.4 Connections for Unused Pins....34
7 Specifications....35
7.1 Absolute Maximum Ratings....35
7.2 ESD Ratings....35
7.3 Recommended Operating Conditions....36
7.4 Thermal Information....36
7.5 Supply Current Characteristics....38
7.6 Power Supply Sequencing....39
7.7 Flash Memory Characteristics....40
7.8 Timing Characteristics....41
7.9 Clock Specifications....42
7.10 Digital IO....45
7.11 Analog Mux VBOOST....48
7.12 ADC....49
7.13 Temperature Sensor....51
7.14 VREF1....51
7.15 VREF2....52
7.16 Comparator (COMP)....52
7.17 I2C....53
7.18 SPI....54
7.19 UART....56
7.20 USB Specifications....56
7.21 Serial Audio....57
7.22 TIMx....58
7.23 Emulation and Debug....58
8 Detailed Description....59
8.1 Functional Block Diagram....59
8.2 CPU....60
8.3 Operating Modes....61
8.4 Power Management Unit (PMU)....63
8.5 Clock Module (CKM)....63
8.6 DMA....64
8.7 Events....65
8.8 Memory....66
8.9 Flash Memory....69
8.10 SRAM....69
8.11 GPIO....70
8.12 IOMUX....70
8.13 ADC....70
8.14 Temperature Sensor....71
8.15 VREF....71
8.16 COMP....73
8.17 Security....73
8.18 AESADV....74
8.19 Keystore....74
8.20 CRC-P....74
8.21 Serial Communication Interfaces....74
8.22 Low-Frequency Sub System (LFSS)....79
8.23 RTC_B....79
8.24 IWDT_B....80
8.25 WWDT....80
8.26 Timers (TIMx)....80
8.27 Device Analog Connections....83
8.28 Input/Output Diagrams....84
8.29 Serial Wire Debug Interface....85
8.30 Boot Strap Loader (BSL)....85
8.31 Device Factory Constants....86
8.32 Identification....86
9 Applications, Implementation, and Layout....88
9.1 Typical Application....88
10 Device and Documentation Support....90
10.1 Getting Started and Next Steps....90
10.2 Device Nomenclature....90
10.3 Tools and Software....91
10.4 Documentation Support....92
10.5 Support Resources....92
10.6 Trademarks....92
10.7 Electrostatic Discharge Caution....92
10.8 Glossary....92
11 Revision History....92
12 Mechanical, Packaging, and Orderable Information....94

5 Device Comparison

The following table summarizes the features of each device that is described in this data sheet.

Table 5-1. Device Comparison Table

DEVICE NAME [1] [4]	FLASH / SRAM (KB)	QUAL [2]	USB2.0-FS / I2S	UART/I2C/SPI	ADC CHAN	GPIO	PACKAGE [3]
MSPM0G5115SPMR	32 / 16	S	1 / 1	3/2/2	26	59	64 LQFP (0.5-mm pitch) [12mm x 12mm]
MSPM0G5116SPMR	64 / 32	S	1 / 1	3/2/2	26	59	
MSPM0G5117SPMR	128 / 32	S	1 / 1	3/2/2	26	59	
MSPM0G5115SPTR	32 / 16	S	1 / 1	3/2/2	20	43	48 LQFP (0.5-mm pitch) [9mm x 9mm]
MSPM0G5116SPTR	64 / 32	S	1 / 1	3/2/2	20	43	
MSPM0G5117SPTR	128 / 32	S	1 / 1	3/2/2	20	43	
MSPM0G5115SRGZR	32 / 16	S	1 / 1	3/2/2	20	43	48 VQFN (0.5-mm pitch) [7mm x 7mm]
MSPM0G5116SRGZR	64 / 32	S	1 / 1	3/2/2	20	43	
MSPM0G5117SRGZR	128 / 32	S	1 / 1	3/2/2	20	43	
MSPM0G5115SRHBR	32 / 16	S	1 / 1	3/2/2	12	27	32 VQFN (0.5-mm pitch) [5mm x 5mm]
MSPM0G5116SRHBR	64 / 32	S	1 / 1	3/2/2	12	27	
MSPM0G5117SRHBR	128 / 32	S	1 / 1	3/2/2	12	27	
MSPM0G5115S28YCJR	32 / 16	S	1 / 1	3/2/2	10	23	28 DSBGA (0.35-mm pitch) [2.556mm x 1.637mm]
MSPM0G5116S28YCJR	64 / 32	S	1 / 1	3/2/2	10	23	
MSPM0G5117S28YCJR	128 / 32	S	1 / 1	3/2/2	10	23	
MSPM0G5115SRUYR	32 / 16	S	1 / 1	3/2/2	10	23	28 WQFN (0.4-mm pitch) [4mm x 4mm]
MSPM0G5116SRUYR	64 / 32	S	1 / 1	3/2/2	10	23	
MSPM0G5117SRUYR	128 / 32	S	1 / 1	3/2/2	10	23	
MSPM0G5115SRGER	32 / 16	S	1 / 1	3/2/2	8	19	24 VQFN (0.5-mm pitch) [4mm x 4mm]
MSPM0G5116SRGER	64 / 32	S	1 / 1	3/2/2	8	19	
MSPM0G5117SRGER	128 / 32	S	1 / 1	3/2/2	8	19	
MSPM0G5115SDGS20R	32 / 16	S	1 / 1	3/2/2	6	15	20 VSSOP (0.5-mm pitch) [5.1mm x 4.9mm]
MSPM0G5116SDGS20R	64 / 32	S	1 / 1	3/2/2	6	15	
MSPM0G5117SDGS20R	128 / 32	S	1 / 1	3/2/2	6	15	

Copyright © 2025 Texas Instruments Incorporated

5.1 Device Comparison Chart

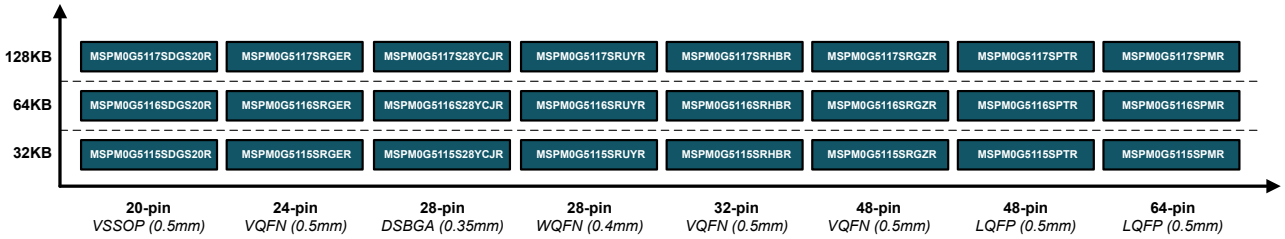

Figure 5-1. Device Comparison Chart

6 Pin Configuration and Functions

The System Configuration tool provides a graphical interface to enable, configurable, and generate initialization code for pin multiplexing and simplifying pin settings. The pin diagrams shown in the data sheet show the primary peripheral functions, some of the integrated device features, and available clock signals to simplify the device pinout.

For full descriptions of the pin functions, see the *Pin Attributes* and *Signal Descriptions* sections.

6.1 Pin Diagrams

For full pin configuration and functions for each package option, refer to Pin Attributes and Signal Descriptions.

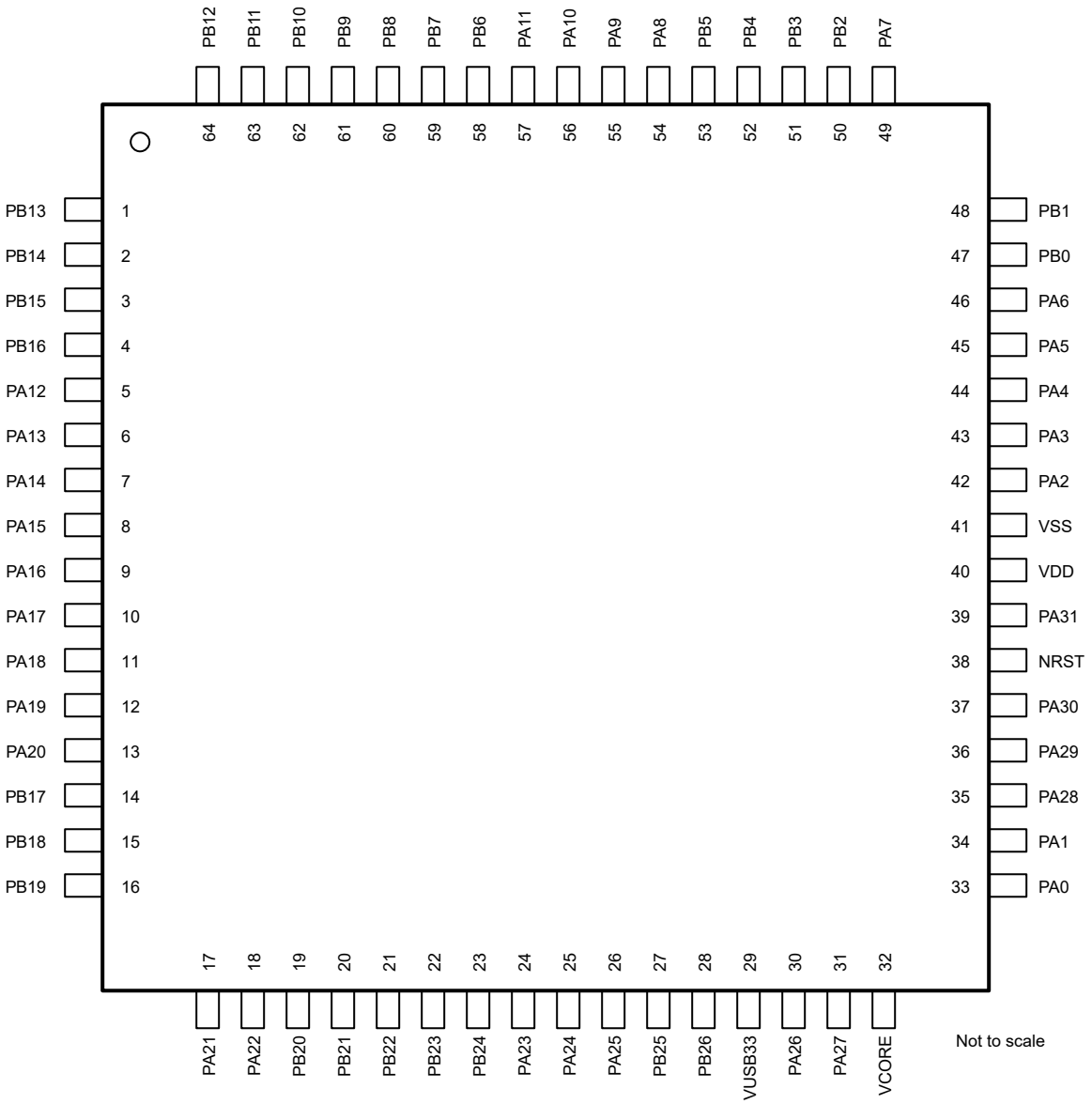

Figure 6-1. 64-pin PM (0.5mm) (LQFP) Package Diagram

Copyright © 2025 Texas Instruments Incorporated

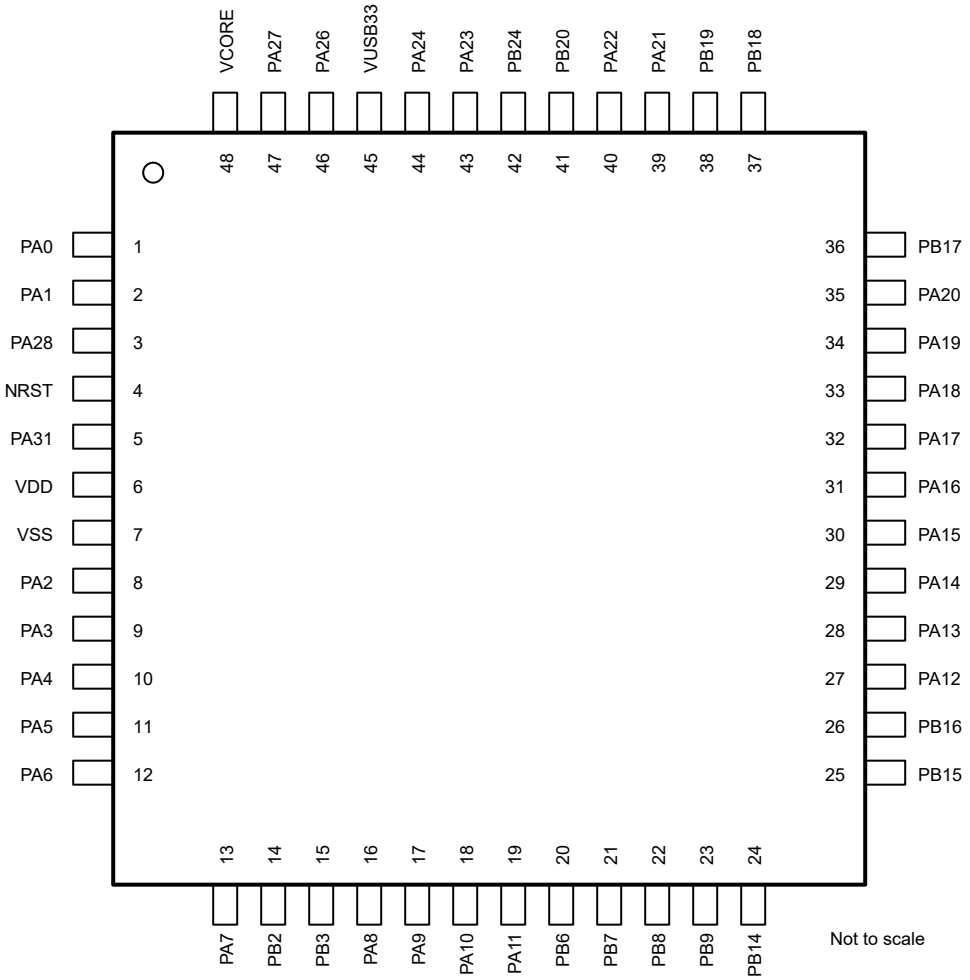

Figure 6-2. 48-pin PT (0.5mm) (LQFP) Package Diagram

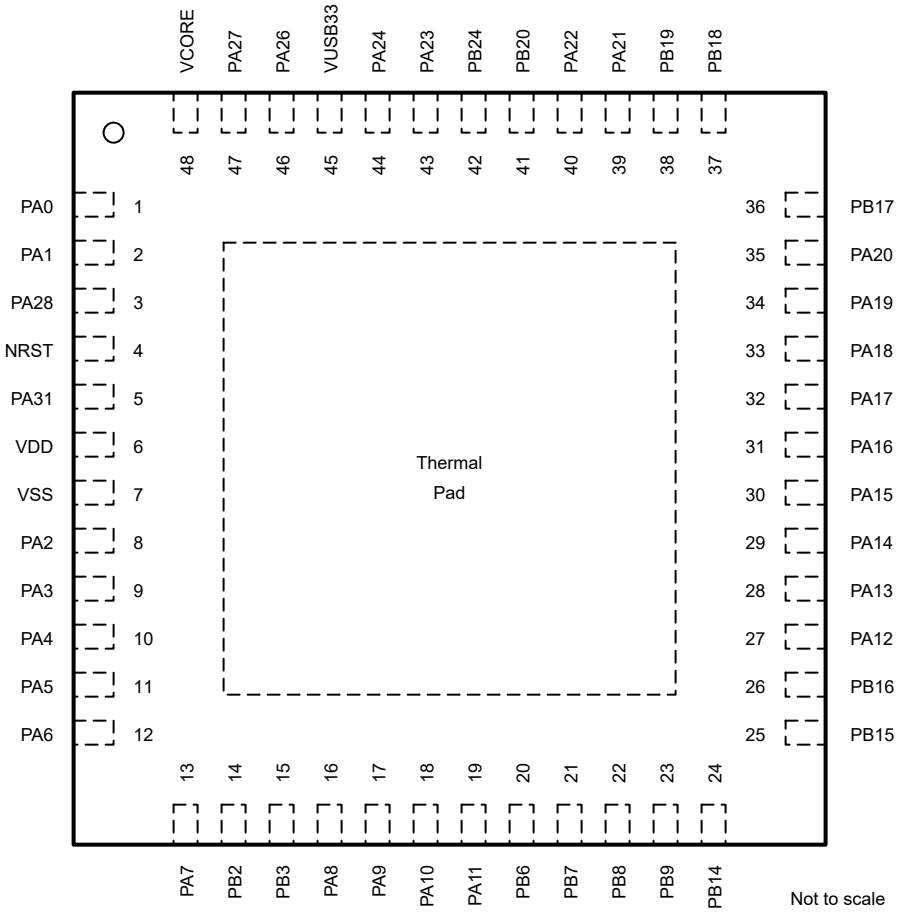

Figure 6-3. 48-pin RGZ (0.5mm) (VQFN) Package Diagram

Copyright © 2025 Texas Instruments Incorporated

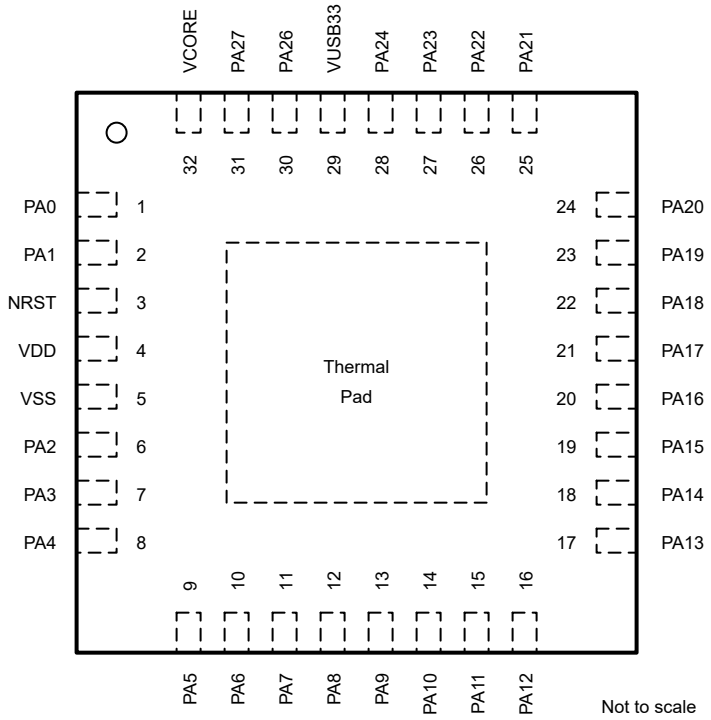

Figure 6-4. 32-pin RHB (0.5mm) (VQFN) Package Diagram

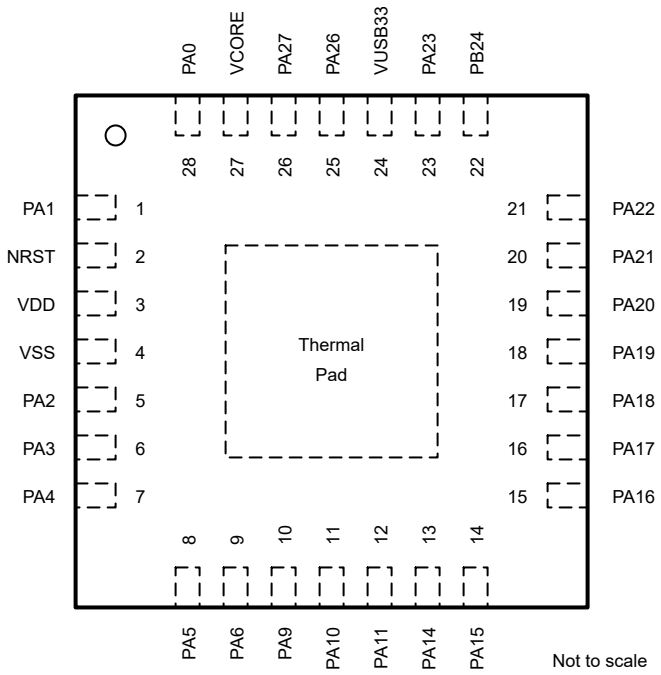

Figure 6-5. 28-pin RUY (0.5mm) (WQFN) Package Diagram

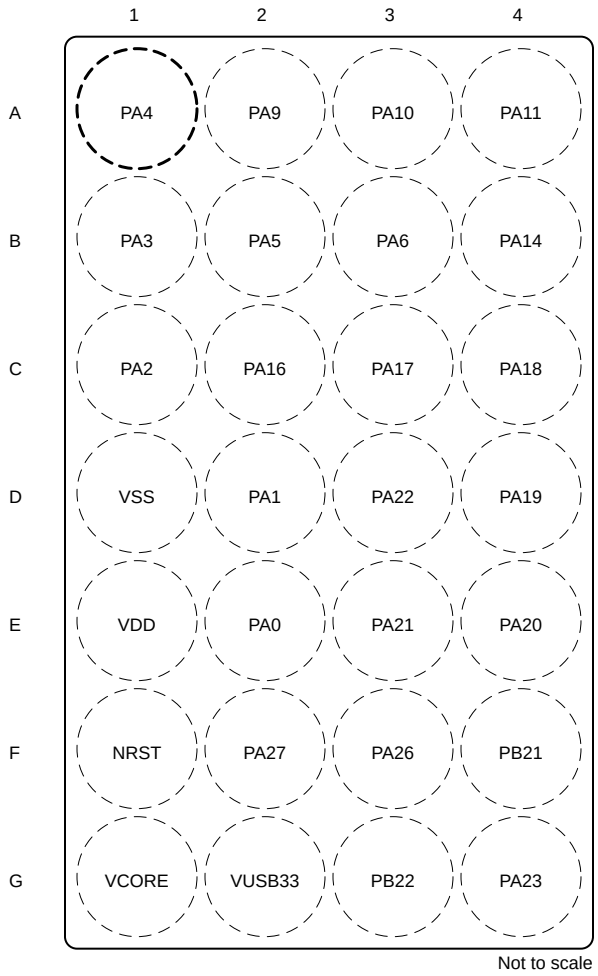

Figure 6-6. 28-pin YCJ (0.35mm) (DSBGA) Package Diagram (Ball Mount Facing Down View)

Copyright © 2025 Texas Instruments Incorporated

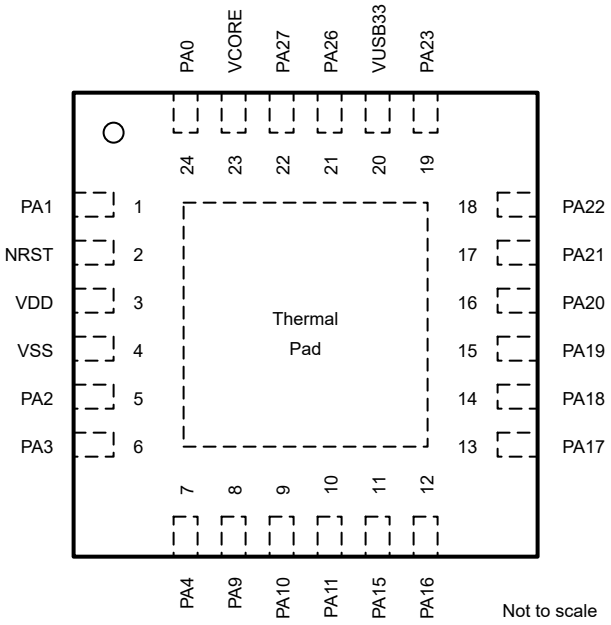

Figure 6-7. 24-pin RGE (0.5mm) (VQFN) Package Diagram

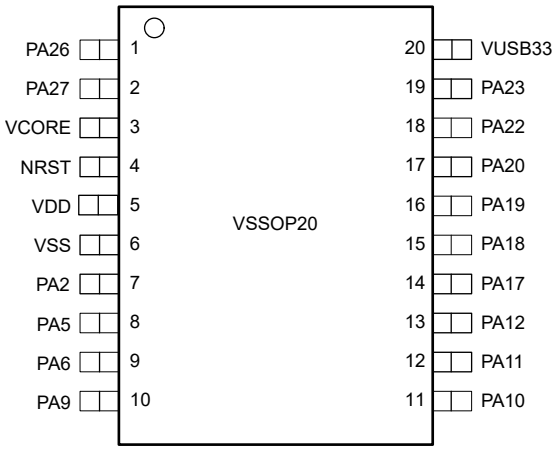

Figure 6-8. 20-pin DGS (0.5mm) (VSSOP) Package Diagram

6.2 Pin Attributes

The following table describes the functions available on every pin for each device package.

Note

Each digital I/O on a device is mapped to a specific Pin Control Management Register (PINCMx) that lets users configure the desired *Pin Function* using the PINCM.PF control bits.

Each digital I/O on a device is mapped to a specific Pin Control Management Register (PINCMx) which allows users to configure the desired Pin Function using the PINCM.PF control bits. The IOMUX only supports connecting one IOMUX-managed digital function to the pin at the same time. The PINCM.PF and PINCM.PC in IOMUX are recommended to be set to 0 when non-IOMUX managed functions (such as analog connections) are intended to be used on a pin. However, non-IOMUX managed signals (such as analog inputs and WAKE inputs) can be enabled on a pin at the same time that an IOMUX managed digital function is enabled on the pin,

provided there is no contention between the functions. In this case, the designer must verify that no contention exists between the functions enabled on each pin.

Table 6-1. Digital IO Features by IO Type

BUFFER TYPE	INVERSION CONTROL	DRIVE STRENGTH CONTROL	HYSTERESIS CONTROL	PULLUP RESISTOR	PULLDOWN RESISTOR	WAKEUP LOGIC	Power Domain
SDIO (standard drive)	Y			Y	Y		VDD
SDIO (standard drive) with wake	Y			Y	Y	Y	VDD
HDIO (High drive)	Y	Y		Y	Y	Y	VDD
HSIO (High speed)	Y	Y		Y	Y	Y	VDD
ODIO (5V-tolerant open drain)	Y		Y		Y	Y	VDD
USBIO (USB2.0-FS)	Y			Y	Y		VUSB33

Table 6-2. Pin Attributes

DGS20 PIN	RUY PIN	YCJ PIN	RGE PIN	RHB PIN	RGZ PIN	PT PIN	PM PIN	PIN NAME/ IOMUX REG/ IOMUX ADDR	SIGNAL NAME	IOMUX PF	SIGNAL TYPE	BUFFER TYPE
4	2	F1	2	3	4	4	38	NRST	NRST	(Non-IOMUX 1) 0	I	RESET
									WAKE	(Non-IOMUX 2) 0	I	
	28	E2	24	1	1	1	33	PA0 PINCM1 0x40428000	PA0	1	IO	ODIO (5V-tol)
									UC1_SDA_TX	2	IO	
									FCC_IN	3	I	
									TIMA0_C0	4	IO	
									TIMG0_C0	5	IO	
									TIMA_FAL1	6	I	
									UC0_SDA_TX	7	IO	
									BSLSDA	(Non-IOMUX 1) 0	IOD	
									WAKE	(Non-IOMUX 2) 0	I	
	1	D2	1	2	2	2	34	PA1 PINCM2 0x40428004	PA1	1	IO	ODIO (5V-tol)
									UC1_SCL_RX	2	IO	
									UC2_CS3	3	O	
									TIMA0_C1	4	IO	
									TIMG0_C1	5	IO	
									TIMA_FAL2	6	I	
									UC0_SCL_RX	7	IO	
									BSLSCL	(Non-IOMUX 1) 0	IOD	
									WAKE	(Non-IOMUX 2) 0	I	
7	5	C1	5	6	8	8	42	PA2 PINCM7 0x40428018	PA2	1	IO	SDIO (standard)
									UC1_RTS	2	O	
									UC2_CS1	3	O	
									TIMG7_C1	4	IO	
									TIMA0_C0	5	IO	
									TIMA0_C3N	6	O	
									TIMA0_C2N	7	O	
									TIMA_FAL0	8	I	
									TIMA_FAL1	9	I	
									UC3_CS0_CTS	10	IO	
									ROSC	(Non-IOMUX 1) 0	A	

Copyright © 2025 Texas Instruments Incorporated

Table 6-2. Pin Attributes (continued)

DGS20 PIN	RUY PIN	YCJ PIN	RGE PIN	RHB PIN	RGZ PIN	PT PIN	PM PIN	PIN NAME/ IOMUX REG/ IOMUX ADDR	SIGNAL NAME	IOMUX PF	SIGNAL TYPE	BUFFER TYPE
	6	B1	6	7	9	9	43	PA3 PINCM8 0x4042801c	PA3	1	IO	SDIO (standard)
									UC1_SDA_TX	2	IO	
									UC2_CS1	3	O	
									UC2_CS3	4	O	
									TIMA0_C1	5	IO	
									COMP0_OUT	6	O	
									TIMG7_C0	7	IO	
									TIMA0_C2	8	IO	
									UC1_CTS	9	I	
									LFXIN	(Non-IOMUX 1) 0	A	
	7	A1	7	8	10	10	44	PA4 PINCM9 0x40428020	PA4	1	IO	SDIO (standard)
									UC1_SCL_RX	2	IO	
									UC2_POCI	3	I	
									UC2_CS0	4	O	
									TIMA0_C1N	5	O	
									LFCLK_IN	6	I	
									TIMG7_C1	7	IO	
									TIMA0_C3	8	IO	
									LFXOUT	(Non-IOMUX 1) 0	A	
8	8	B2		9	11	11	45	PA5 PINCM10 0x40428024	PA5	1	IO	SDIO (standard)
									UC1_SDA_TX	2	IO	
									UC2_PICO	3	O	
									UC0_CTS	4	I	
									TIMG0_C0	5	IO	
									FCC_IN	6	I	
									TIMG6_C0	7	IO	
									TIMA_FAL1	8	I	
									UC3_POCI_RTS	9	IO	
									HFXIN	(Non-IOMUX 1) 0	A	
9	9	B3		10	12	12	46	PA6 PINCM11 0x40428028	PA6	1	IO	SDIO (standard)
									UC1_SCL_RX	2	IO	
									UC2_SCK	3	IO	
									UC0_RTS	4	O	
									TIMG0_C1	5	IO	
									HFCLK_IN	6	I	
									TIMG6_C1	7	IO	
									TIMA_FAL0	8	I	
									TIMA0_C2N	9	O	
									UC3_PICO_TX	10	IO	
									HFXOUT	(Non-IOMUX 1) 0	A	

Table 6-2. Pin Attributes (continued)

DGS20 PIN	RUY PIN	YCJ PIN	RGE PIN	RHB PIN	RGZ PIN	PT PIN	PM PIN	PIN NAME/ IOMUX REG/ IOMUX ADDR	SIGNAL NAME	IOMUX PF	SIGNAL TYPE	BUFFER TYPE
				11	13	13	49	PA7 PINCM14 0x40428034	PA7	1	IO	SDIO (standard)
									UC2_POCI	2	I	
									UC2_CS2	3	O	
									COMP0_OUT	4	O	
									TIMA0_C2	5	IO	
									TIMG7_C1	6	IO	
									CLK_OUT	7	O	
									TIMA0_C1	8	IO	
									FCC_IN	9	I	
				12	16	16	54	PA8 PINCM19 0x40428048	PA8	1	IO	SDIO (standard)
									UC1_SDA_TX	2	IO	
									UC2_CS0	3	O	
									UC0_SDA_TX	4	IO	
									TIMA0_C0	5	IO	
									TIMA_FAL2	6	I	
									TIMA_FAL0	7	I	
									UC2_CS3	8	O	
									I2S0_WCLK	9	IO	
									UC0_RTS	10	O	
									HFCLK_IN	11	I	
10	10	A2	8	13	17	17	55	PA9 PINCM20 0x4042804c	PA9	1	IO	HSIO (High-speed)
									UC1_SCL_RX	2	IO	
									UC2_PICO	3	O	
									UC0_SCL_RX	4	IO	
									TIMA0_C0N	5	O	
									CLK_OUT	6	O	
									TIMA0_C1	7	IO	
									RTC_OUT	8	O	
									I2S0_BCLK	9	IO	
									UC3_SCK_RX	10	IO	
									UC0_CTS	11	I	
11	11	A3	9	14	18	18	56	PA10 PINCM21 0x40428050	PA10	1	IO	HDIO (high-drive)
									UC0_SDA_TX	2	IO	
									UC2_POCI	3	I	
									UC1_SDA_TX	4	IO	
									TIMA0_C2	5	IO	
									CLK_OUT	6	O	
									TIMG0_C0	7	IO	
									TIMA_FAL1	8	I	
									I2S0_AD0	9	IO	
									UC3_PICO_TX	10	IO	
									BSLTX	(Non-IOMUX 1) 0	O	
									WAKE	(Non-IOMUX 2) 0	I	

Copyright © 2025 Texas Instruments Incorporated

Table 6-2. Pin Attributes (continued)

DGS20 PIN	RUY PIN	YCJ PIN	RGE PIN	RHB PIN	RGZ PIN	PT PIN	PM PIN	PIN NAME/ IOMUX REG/ IOMUX ADDR	SIGNAL NAME	IOMUX PF	SIGNAL TYPE	BUFFER TYPE
12	12	A4	10	15	19	19	57	PA11 PINCM22 0x40428054	PA11	1	IO	HDIO (high-drive)
									UC0_SCL_RX	2	IO	
									UC2_SCK	3	IO	
									UC1_SCL_RX	4	IO	
									TIMA0_C2N	5	O	
									COMP0_OUT	6	O	
									TIMG0_C1	7	IO	
									TIMA_FAL0	8	I	
									I2S0_AD1	9	IO	
									UC3_POCI_RTS	10	IO	
									BSLRX	(Non-IOMUX 1) 0	I	
									WAKE	(Non-IOMUX 2) 0	I	
									COMP0_DAC8	(Non-IOMUX 3) 0	O	
13				16	27	27	5	PA12 PINCM34 0x40428084	PA12	1	IO	HSIO (High-speed)
									UC3_CS0_CTS	2	IO	
									UC2_SCK	3	IO	
									COMP0_OUT	4	O	
									TIMA0_C3	5	IO	
									FCC_IN	6	I	
									TIMG0_C0	7	IO	
									UC1_CTS	8	I	
									I2S0_BCLK	9	IO	
									UC0_RTS	10	O	
									UC2_CS0	11	O	
									A0_18	(Non-IOMUX 1) 0	A	
				17	28	28	6	PA13 PINCM35 0x40428088	PA13	1	IO	SDIO (standard)
									UC3_POCI_RTS	2	IO	
									UC2_POCI	3	I	
									UC3_SCK_RX	4	IO	
									TIMA0_C3N	5	O	
									RTC_OUT	6	O	
									TIMG0_C1	7	IO	
									UC3_CS0_CTS	8	IO	
									I2S0_AD0	9	IO	
									UC1_RTS	10	O	
									UC2_CS3	11	O	
									A0_17	(Non-IOMUX 1) 0	A	
									COMP0_IN2-	(Non-IOMUX 2) 0	A	
	13	B4		18	29	29	7	PA14 PINCM36 0x4042808c	PA14	1	IO	SDIO (standard)
									UC0_CTS	2	I	
									UC2_PICO	3	O	
									UC3_PICO_TX	4	IO	
									TIMG7_C0	5	IO	
									CLK_OUT	6	O	
									TIMG6_C0	7	IO	
									I2S0_AD1	9	IO	
									A0_16	(Non-IOMUX 1) 0	A	
									COMP0_IN2+	(Non-IOMUX 2) 0	A	

Copyright © 2025 Texas Instruments Incorporated

Table 6-2. Pin Attributes (continued)

DGS20 PIN	RUY PIN	YCJ PIN	RGE PIN	RHB PIN	RGZ PIN	PT PIN	PM PIN	PIN NAME/ IOMUX REG/ IOMUX ADDR	SIGNAL NAME	IOMUX PF	SIGNAL TYPE	BUFFER TYPE
	14		11	19	30	30	8	PA15 PINCM37 0x40428090	PA15	1	IO	SDIO (standard)
									UC0_RTS	2	O	
									UC2_CS3	3	O	
									UC1_SCL_RX	4	IO	
									TIMA0_C2	5	IO	
									COMP0_OUT	6	O	
									UC1_RTS	7	O	
									I2S0_WCLK	8	IO	
									A0_15	(Non-IOMUX 1) 0	A	
									COMP0_IN3+	(Non-IOMUX 2) 0	A	
	15	C2	12	20	31	31	9	PA16 PINCM38 0x40428094	PA16	1	IO	SDIO (standard)
									UC0_CTS	2	I	
									UC3_POCI_RTS	3	IO	
									UC1_SDA_TX	4	IO	
									TIMA0_C2N	5	O	
									FCC_IN	6	I	
									UC1_CTS	7	I	
									COMP0_OUT	8	O	
									I2S0_MCLK	9	IO	
									A0_14	(Non-IOMUX 1) 0	A	
14	16	C3	13	21	32	32	10	PA17 PINCM39 0x40428098	PA17	1	IO	SDIO (standard with wake)
									UC1_SDA_TX	2	IO	
									UC3_SCK_RX	3	IO	
									UC1_SCL_RX	4	IO	
									TIMA0_C3	5	IO	
									TIMG7_C0	6	IO	
									UC2_CS1	7	O	
									I2S0_WCLK	8	IO	
									WAKE	(Non-IOMUX 1) 0	I	
									A0_13	(Non-IOMUX 2) 0	A	
									COMP0_IN1-	(Non-IOMUX 3) 0	A	
15	17	C4	14	22	33	33	11	PA18 PINCM40 0x4042809c	PA18	1	IO	SDIO (standard with wake)
									UC1_SCL_RX	2	IO	
									UC3_PICO_TX	3	IO	
									UC1_SDA_TX	4	IO	
									TIMA0_C3N	5	O	
									TIMG7_C1	6	IO	
									UC2_CS0	7	O	
									TIMA_FAL2	8	I	
									I2S0_MCLK	9	IO	
									BSL_invoke	(Non-IOMUX 1) 0	I	
									WAKE	(Non-IOMUX 2) 0	I	
									A0_12	(Non-IOMUX 3) 0	A	
									COMP0_IN1+	(Non-IOMUX 4) 0	A	

Copyright © 2025 Texas Instruments Incorporated

Table 6-2. Pin Attributes (continued)

DGS20 PIN	RUY PIN	YCJ PIN	RGE PIN	RHB PIN	RGZ PIN	PT PIN	PM PIN	PIN NAME/ IOMUX REG/ IOMUX ADDR	SIGNAL NAME	IOMUX PF	SIGNAL TYPE	BUFFER TYPE
16	18	D4	15	23	34	34	12	PA19 PINCM41 0x404280a0	PA19	1	IO	SDIO (standard)
									SWDIO	2	IO	
									UC3_POCI_RTS	3	IO	
									UC1_SDA_TX	4	IO	
									TIMA0_C2	5	IO	
									TIMG0_C0	6	IO	
									I2S0_AD0	7	IO	
									A0_1	(Non-IOMUX 1) 0	A	
17	19	E4	16	24	35	35	13	PA20 PINCM42 0x404280a4	PA20	1	IO	SDIO (standard)
									SWCLK	2	I	
									UC3_SCK_RX	3	IO	
									UC1_SCL_RX	4	IO	
									TIMA0_C2N	5	O	
									TIMG0_C1	6	IO	
									UC3_CS0_CTS	7	IO	
									I2S0_AD1	8	IO	
									A0_0	(Non-IOMUX 1) 0	A	
	20	E3	17	25	39	39	17	PA21 PINCM46 0x404280b4	PA21	1	IO	SDIO (standard)
									UC3_PICO_TX	2	IO	
									UC2_CS3	3	O	
									UC1_CTS	4	I	
									TIMA0_C0	5	IO	
									TIMG6_C0	6	IO	
									COMP0_OUT	7	O	
									I2S0_AD0	8	IO	
									A0_8	(Non-IOMUX 1) 0	A	
									VREF-	(Non-IOMUX 2) 0	A	
18	21	D3	18	26	40	40	18	PA22 PINCM47 0x404280b8	PA22	1	IO	SDIO (standard)
									UC3_SCK_RX	2	IO	
									UC2_CS2	3	O	
									UC1_RTS	4	O	
									TIMA0_C0N	5	O	
									TIMG6_C1	6	IO	
									TIMA0_C1	7	IO	
									I2S0_BCLK	8	IO	
									CLK_OUT	9	O	
									A0_7	(Non-IOMUX 1) 0	A	
19	23	G4	19	27	43	43	24	PA23 PINCM53 0x404280d0	PA23	1	IO	SDIO (standard)
									UC3_PICO_TX	2	IO	
									UC2_CS3	3	O	
									UC3_CS0_CTS	4	IO	
									TIMA0_C3	5	IO	
									TIMG0_C0	6	IO	
									TIMG7_C0	7	IO	
									I2S0_WCLK	8	IO	
									VREF+	(Non-IOMUX 1) 0	A	

Table 6-2. Pin Attributes (continued)

DGS20 PIN	RUY PIN	YCJ PIN	RGE PIN	RHB PIN	RGZ PIN	PT PIN	PM PIN	PIN NAME/ IOMUX REG/ IOMUX ADDR	SIGNAL NAME	IOMUX PF	SIGNAL TYPE	BUFFER TYPE
				28	44	44	25	PA24 PINCM54 0x404280d4	PA24	1	IO	SDIO (standard)
									UC3_POCI_RTS	2	IO	
									UC2_CS2	3	O	
									UC3_SCK_RX	4	IO	
									TIMA0_C3N	5	O	
									TIMG0_C1	6	IO	
									TIMG7_C1	7	IO	
									I2S0_AD1	8	IO	
									A0_3	(Non-IOMUX 1) 0	A	
							26	PA25 PINCM55 0x404280d8	PA25	1	IO	SDIO (standard)
									UC3_SCK_RX	2	IO	
									UC2_CS3	3	O	
									UC3_PICO_TX	4	IO	
									TIMA0_C3	5	IO	
									TIMA0_C1N	6	O	
									COMP0_OUT	7	O	
									A0_2	(Non-IOMUX 1) 0	A	
1	25	F3	21	30	46	46	30	PA26 PINCM58 0x404280e4	PA26	1	IO	USBIO
									UC0_SDA_TX	3	IO	
									UC1_SCL_RX	4	IO	
									TIMG7_C0	5	IO	
									FCC_IN	6	I	
									TIMA_FAL0	7	I	
									UC3_PICO_TX	8	IO	
									BSLUSB_DM	(Non-IOMUX 1) 0	IO	
									USB_DM	(Non-IOMUX 2) 0	IO	
2	26	F2	22	31	47	47	31	PA27 PINCM59 0x404280e8	PA27	1	IO	USBIO
									UC0_SCL_RX	3	IO	
									UC1_SDA_TX	4	IO	
									TIMG7_C1	5	IO	
									CLK_OUT	6	O	
									RTC_OUT	7	O	
									COMP0_OUT	8	O	
									UC3_SCK_RX	9	IO	
									TIMA_FAL2	10	I	
									BSLUSB_DP	(Non-IOMUX 1) 0	IO	
									USB_DP	(Non-IOMUX 2) 0	IO	
					3	3	35	PA28 PINCM3 0x40428008	PA28	1	IO	HDIO (high-drive)
									UC1_SDA_TX	2	IO	
									TIMA0_C1	3	IO	
									TIMA0_C3	4	IO	
									TIMG7_C0	5	IO	
									TIMA_FAL0	6	I	
									UC0_SDA_TX	7	IO	
									WAKE	(Non-IOMUX 1) 0	I	

Copyright © 2025 Texas Instruments Incorporated

Table 6-2. Pin Attributes (continued)

DGS20 PIN	RUY PIN	YCJ PIN	RGE PIN	RHB PIN	RGZ PIN	PT PIN	PM PIN	PIN NAME/ IOMUX REG/ IOMUX ADDR	SIGNAL NAME	IOMUX PF	SIGNAL TYPE	BUFFER TYPE
							36	PA29 PINCM4 0x4042800c	PA29	1	IO	SDIO (standard)
									UC1_SCL_RX	2	IO	
									UC1_CTS	3	I	
									UC2_CS3	4	O	
									TIMG6_C0	5	IO	
									UC0_CTS	6	I	
							37	PA30 PINCM5 0x40428010	PA30	1	IO	SDIO (standard)
									UC1_SDA_TX	2	IO	
									UC1_RTS	3	O	
									UC2_CS2	4	O	
									TIMG6_C1	5	IO	
									UC0_RTS	6	O	
					5	5	39	PA31 PINCM6 0x40428014	PA31	1	IO	SDIO (standard with wake)
									UC1_SCL_RX	2	IO	
									UC2_CS3	3	O	
									TIMA0_C3N	4	O	
									TIMG7_C1	5	IO	
									CLK_OUT	6	O	
									UC0_SCL_RX	7	IO	
									WAKE	(Non-IOMUX 1) 0	I	
							47	PB0 PINCM12 0x4042802c	PB0	1	IO	SDIO (standard)
									UC0_SDA_TX	2	IO	
									UC2_CS3	3	O	
									UC0_SCL_RX	4	IO	
									TIMA0_C2	5	IO	
									TIMG0_C0	6	IO	
							48	PB1 PINCM13 0x40428030	PB1	1	IO	SDIO (standard)
									UC0_SCL_RX	2	IO	
									UC2_CS2	3	O	
									UC0_SDA_TX	4	IO	
									TIMA0_C2N	5	O	
									TIMG0_C1	6	IO	
					14	14	50	PB2 PINCM15 0x40428038	PB2	1	IO	SDIO (standard)
									UC3_PICO_TX	2	IO	
									UC1_SCL_RX	3	IO	
									UC1_CTS	4	I	
									TIMA0_C3	5	IO	
									TIMG6_C0	6	IO	
									UC2_PICO	7	O	
									HFCLK_IN	8	I	
					15	15	51	PB3 PINCM16 0x4042803c	PB3	1	IO	SDIO (standard)
									UC3_SCK_RX	2	IO	
									UC1_SDA_TX	3	IO	
									UC1_RTS	4	O	
									TIMA0_C3N	5	O	
									TIMG6_C1	6	IO	
									UC2_SCK	7	IO	
									TIMA0_C0	8	IO	

Table 6-2. Pin Attributes (continued)

DGS20 PIN	RUY PIN	YCJ PIN	RGE PIN	RHB PIN	RGZ PIN	PT PIN	PM PIN	PIN NAME/ IOMUX REG/ IOMUX ADDR	SIGNAL NAME	IOMUX PF	SIGNAL TYPE	BUFFER TYPE
							52	PB4 PINCM17 0x40428040	PB4	1	IO	SDIO (standard)
									UC1_SDA_TX	2	IO	
									UC3_CS0_CTS	3	IO	
									TIMA0_C1	4	IO	
									TIMA0_C2	5	IO	
									TIMG0_C0	6	IO	
							53	PB5 PINCM18 0x40428044	PB5	1	IO	SDIO (standard)
									UC1_SCL_RX	2	IO	
									UC3_POCI_RTS	3	IO	
									TIMA0_C1N	4	O	
									TIMA0_C2N	5	O	
									TIMG0_C1	6	IO	
					20	20	58	PB6 PINCM23 0x40428058	PB6	1	IO	SDIO (standard)
									UC1_SDA_TX	2	IO	
									UC3_CS0_CTS	3	IO	
									UC2_CS1	4	O	
									TIMG6_C0	5	IO	
									TIMA_FAL2	6	I	
					21	21	59	PB7 PINCM24 0x4042805c	PB7	1	IO	SDIO (standard)
									UC1_SCL_RX	2	IO	
									UC3_POCI_RTS	3	IO	
									UC2_CS2	4	O	
									TIMG6_C1	5	IO	
					22	22	60	PB8 PINCM25 0x40428060	PB8	1	IO	SDIO (standard)
									UC1_CTS	2	I	
									UC3_PICO_TX	3	IO	
									COMP0_OUT	4	O	
									TIMA0_C0	5	IO	
					23	23	61	PB9 PINCM26 0x40428064	PB9	1	IO	SDIO (standard)
									UC1_RTS	2	O	
									UC3_SCK_RX	3	IO	
									TIMA0_C1	4	IO	
									TIMA0_C0N	5	O	
							62	PB10 PINCM27 0x40428068	PB10	1	IO	SDIO (standard)
									UC3_CS0_CTS	2	IO	
									UC2_CS1	3	O	
									COMP0_OUT	4	O	
									TIMG0_C0	5	IO	
									TIMG6_C0	6	IO	
									I2S0_WCLK	7	IO	
							63	PB11 PINCM28 0x4042806c	PB11	1	IO	SDIO (standard)
									UC3_POCI_RTS	2	IO	
									UC2_CS2	3	O	
									CLK_OUT	4	O	
									TIMG0_C1	5	IO	
									TIMG6_C1	6	IO	
									I2S0_BCLK	7	IO	

Copyright © 2025 Texas Instruments Incorporated

Table 6-2. Pin Attributes (continued)

DGS20 PIN	RUY PIN	YCJ PIN	RGE PIN	RHB PIN	RGZ PIN	PT PIN	PM PIN	PIN NAME/ IOMUX REG/ IOMUX ADDR	SIGNAL NAME	IOMUX PF	SIGNAL TYPE	BUFFER TYPE
							64	PB12 PINCM29 0x40428070	PB12	1	IO	SDIO (standard)
									UC3_PICO_TX	2	IO	
									UC2_CS0	3	O	
									TIMA_FAL1	4	I	
									TIMA0_C1	5	IO	
									TIMA0_C2	6	IO	
									I2S0_AD0	7	IO	
							1	PB13 PINCM30 0x40428074	PB13	1	IO	SDIO (standard)
									UC3_SCK_RX	2	IO	
									UC3_CS0_CTS	3	IO	
									TIMA_FAL2	4	I	
									TIMA0_C1N	5	O	
									TIMA0_C3	6	IO	
									I2S0_AD1	7	IO	
					24	24	2	PB14 PINCM31 0x40428078	PB14	1	IO	SDIO (standard)
									UC2_CS3	2	O	
									UC3_POCI_RTS	3	IO	
									TIMA0_C2	4	IO	
									TIMA0_C0	5	IO	
									I2S0_MCLK	7	IO	
									A0_21	(Non-IOMUX 1) 0	A	
					25	25	3	PB15 PINCM32 0x4042807c	PB15	1	IO	SDIO (standard)
									UC3_PICO_TX	2	IO	
									UC3_CS0_CTS	3	IO	
									TIMG7_C0	4	IO	
									A0_20	(Non-IOMUX 1) 0	A	
					26	26	4	PB16 PINCM33 0x40428080	PB16	1	IO	SDIO (standard)
									UC3_SCK_RX	2	IO	
									UC3_POCI_RTS	3	IO	
									TIMG7_C1	4	IO	
									A0_19	(Non-IOMUX 1) 0	A	
					36	36	14	PB17 PINCM43 0x404280a8	PB17	1	IO	SDIO (standard)
									UC0_SCL_RX	2	IO	
									UC2_PICO	3	O	
									TIMG0_C0	4	IO	
									TIMA0_C2	5	IO	
									A0_11	(Non-IOMUX 1) 0	A	
					37	37	15	PB18 PINCM44 0x404280ac	PB18	1	IO	SDIO (standard)
									UC0_SDA_TX	2	IO	
									UC2_SCK	3	IO	
									TIMG0_C1	4	IO	
									TIMA0_C2N	5	O	
									A0_10	(Non-IOMUX 1) 0	A	

Table 6-2. Pin Attributes (continued)

DGS20 PIN	RUY PIN	YCJ PIN	RGE PIN	RHB PIN	RGZ PIN	PT PIN	PM PIN	PIN NAME/ IOMUX REG/ IOMUX ADDR	SIGNAL NAME	IOMUX PF	SIGNAL TYPE	BUFFER TYPE
					38	38	16	PB19 PINCM45 0x404280b0	PB19	1	IO	SDIO (standard)
									UC0_CTS	2	I	
									UC2_POCI	3	I	
									TIMG7_C1	4	IO	
									COMP0_OUT	5	O	
									A0_9	(Non-IOMUX 1) 0	A	
					41	41	19	PB20 PINCM48 0x404280bc	PB20	1	IO	SDIO (standard)
									UC0_SDA_TX	2	IO	
									UC3_CS0_CTS	3	IO	
									UC2_CS2	4	O	
									TIMA0_C2	5	IO	
									TIMA_FAL1	6	I	
									TIMA0_C1	7	IO	
									A0_6	(Non-IOMUX 1) 0	A	
		F4					20	PB21 PINCM49 0x404280c0	PB21	1	IO	SDIO (standard)
									UC0_SCL_RX	2	IO	
									UC3_POCI_RTS	3	IO	
									UC1_SDA_TX	4	IO	
									A0_25	(Non-IOMUX 1) 0	A	
									COMP0_IN0+	(Non-IOMUX 2) 0	A	
		G3					21	PB22 PINCM50 0x404280c4	PB22	1	IO	SDIO (standard)
									UC0_SDA_TX	2	IO	
									UC3_PICO_TX	3	IO	
									UC1_SCL_RX	4	IO	
									A0_24	(Non-IOMUX 1) 0	A	
									COMP0_IN0-	(Non-IOMUX 2) 0	A	
							22	PB23 PINCM51 0x404280c8	PB23	1	IO	SDIO (standard)
									UC1_CTS	2	I	
									UC3_SCK_RX	3	IO	
									TIMA_FAL0	4	I	
									COMP0_OUT	5	O	
									A0_22	(Non-IOMUX 1) 0	A	
	22				42	42	23	PB24 PINCM52 0x404280cc	PB24	1	IO	SDIO (standard)
									UC2_CS3	2	O	
									UC2_CS1	3	O	
									UC3_POCI_RTS	4	IO	
									TIMA0_C3	5	IO	
									TIMA0_C1N	6	O	
									A0_5	(Non-IOMUX 1) 0	A	
							27	PB25 PINCM56 0x404280dc	PB25	1	IO	SDIO (standard)
									UC0_CTS	2	I	
									UC2_CS0	3	O	
									TIMA_FAL0	4	I	
									TIMA_FAL1	5	I	
									TIMA_FAL2	6	I	
									COMP0_OUT	7	O	
									FCC_IN	8	I	
									A0_4	(Non-IOMUX 1) 0	A	

Copyright © 2025 Texas Instruments Incorporated

Table 6-2. Pin Attributes (continued)

DGS20 PIN	RUY PIN	YCJ PIN	RGE PIN	RHB PIN	RGZ PIN	PT PIN	PM PIN	PIN NAME/ IOMUX REG/ IOMUX ADDR	SIGNAL NAME	IOMUX PF	SIGNAL TYPE	BUFFER TYPE
							28	PB26 PINCM57 0x404280e0	PB26	1	IO	SDIO (standard)
									UC0_RTS	2	O	
									UC2_CS1	3	O	
									TIMA0_C0	4	IO	
									TIMA0_C3	5	IO	
									TIMG6_C0	6	IO	
									COMP0_OUT	7	O	
									FCC_IN	8	I	
									A0_23	(Non-IOMUX 1) 0	A	
3	27	G1	23	32	48	48	32	VCORE	VCORE	(Non-IOMUX 1) 0	PWR	PWR
5	3	E1	3	4	6	6	40	VDD	VDD	(Non-IOMUX 1) 0	PWR	PWR
6	4	D1	4	5	7	7	41	VSS	VSS	(Non-IOMUX 1) 0	PWR	PWR
20	24	G2	20	29	45	45	29	VUSB33	VUSB33	(Non-IOMUX 1) 0	PWR	PWR

6.3 Signal Descriptions

Many MSPM0 signals are made available on multiple device pins. The following list describes the column headers:

1. **SIGNAL NAME**: The name of the signal which can be connected to one of the specified pins.
2. **PIN TYPE**: The signal direction and signal type:
   - I = Input
   - O = Output
   - IO = Input, output, or simultaneous input and output
   - ID = Input with open-drain behavior
   - OD = Output with open-drain behavior
   - IOD = Input, output, or simultaneous input and output with open-drain behavior
   - A = Analog
   - PWR = Power function
3. **DESCRIPTION**: A description of the signal.
4. **PIN**: Associated pin number.

For additional information on the pin multiplexing scheme, refer to the IOMUX chapter of the . *MSPM0 G-Series 80-MHz Microcontrollers Technical Reference Manual*.

Note

The IOMUX only supports connecting one IOMUX-managed digital function to the pin at the same time. However, non-IOMUX managed signals (such as analog inputs and WAKE inputs) can be enabled on a pin at the same time that an IOMUX managed digital function is enabled on the pin. In this case, the designer must verify that no contention exists between the functions enabled on each pin.

Table 6-3. Analog to Digital Converter (ADC) Signal Descriptions

SIGNAL NAME	PIN TYPE	DESCRIPTION	DGS20 PIN	RUY PIN	YCJ PIN	RGE PIN	RHB PIN	RGZ PIN	PT PIN	PM PIN
A0_0	A	ADC0 analog input channel 0	17	19	E4	16	24	35	35	13
A0_1	A	ADC0 analog input channel 1	16	18	D4	15	23	34	34	12
A0_2	A	ADC0 analog input channel 2								26
A0_3	A	ADC0 analog input channel 3					28	44	44	25
A0_4	A	ADC0 analog input channel 4								27
A0_5	A	ADC0 analog input channel 5		22				42	42	23

Copyright © 2025 Texas Instruments Incorporated

Table 6-3. Analog to Digital Converter (ADC) Signal Descriptions (continued)

SIGNAL NAME	PIN TYPE	DESCRIPTION	DGS20 PIN	RUY PIN	YCJ PIN	RGE PIN	RHB PIN	RGZ PIN	PT PIN	PM PIN
A0_6	A	ADC0 analog input channel 6						41	41	19
A0_7	A	ADC0 analog input channel 7	18	21	D3	18	26	40	40	18
A0_8	A	ADC0 analog input channel 8		20	E3	17	25	39	39	17
A0_9	A	ADC0 analog input channel 9						38	38	16
A0_10	A	ADC0 analog input channel 10						37	37	15
A0_11	A	ADC0 analog input channel 11						36	36	14
A0_12	A	ADC0 analog input channel 12	15	17	C4	14	22	33	33	11
A0_13	A	ADC0 analog input channel 13	14	16	C3	13	21	32	32	10
A0_14	A	ADC0 analog input channel 14		15	C2	12	20	31	31	9
A0_15	A	ADC0 analog input channel 15		14		11	19	30	30	8
A0_16	A	ADC0 analog input channel 16		13	B4		18	29	29	7
A0_17	A	ADC0 analog input channel 17					17	28	28	6
A0_18	A	ADC0 analog input channel 18	13				16	27	27	5
A0_19	A	ADC0 analog input channel 19						26	26	4
A0_20	A	ADC0 analog input channel 20						25	25	3
A0_21	A	ADC0 analog input channel 21						24	24	2
A0_22	A	ADC0 analog input channel 22								22
A0_23	A	ADC0 analog input channel 23								28
A0_24	A	ADC0 analog input channel 24			G3					21
A0_25	A	ADC0 analog input channel 25			F4					20

Table 6-4. Bootstrap Loader (BSL) Signal Descriptions

SIGNAL NAME	PIN TYPE	DESCRIPTION	DGS20 PIN	RUY PIN	YCJ PIN	RGE PIN	RHB PIN	RGZ PIN	PT PIN	PM PIN
BSLRX	I	BSL UART receive signal (RXD)	12	12	A4	10	15	19	19	57
BSLSCL	IOD	BSL I2C clock signal (SCL)		1	D2	1	2	2	2	34
BSLSDA	IOD	BSL I2C data signal (SDA)		28	E2	24	1	1	1	33
BSLTX	O	BSL UART transmit signal (TXD)	11	11	A3	9	14	18	18	56
BSLUSB_DM	IO	BSL USB device firmware update (DFU) minus signal (USB_DM)	1	25	F3	21	30	46	46	30
BSLUSB_DP	IO	BSL USB device firmware update (DFU) positive signal (USB_DP)	2	26	F2	22	31	47	47	31
BSL_invoke	I	BSL invoke signal (if BSL is enabled, must be HIGH during BOOTRST for a BSL entry, and LOW during BOOTRST to prevent BSL entry)	15	17	C4	14	22	33	33	11

Table 6-5. Clock Module (CKM) Signal Descriptions

SIGNAL NAME	PIN TYPE	DESCRIPTION	DGS20 PIN	RUY PIN	YCJ PIN	RGE PIN	RHB PIN	RGZ PIN	PT PIN	PM PIN
CLK_OUT	O	CLK_OUT digital clock output from the PMCU	10, 11, 18, 2	10, 11, 13, 21, 26	A2, A3, B4, D3, F2	18, 22, 8, 9	11, 13, 14, 18, 26, 31	13, 17, 18, 29, 40, 47, 5	13, 17, 18, 29, 40, 47, 5	18, 31, 39, 49, 55, 56, 63, 7
FCC_IN	I	Frequency clock counter (FCC) input signal	1, 13, 8	15, 25, 28, 8	B2, C2, E2, F3	12, 21, 24	1, 11, 16, 20, 30, 9	1, 11, 13, 27, 31, 46	1, 11, 13, 27, 31, 46	27, 28, 30, 33, 45, 49, 5, 9

Copyright © 2025 Texas Instruments Incorporated

Table 6-5. Clock Module (CKM) Signal Descriptions (continued)

SIGNAL NAME	PIN TYPE	DESCRIPTION	DGS20 PIN	RUY PIN	YCJ PIN	RGE PIN	RHB PIN	RGZ PIN	PT PIN	PM PIN
HFCLK_IN	I	High frequency clock digital clock input signal	9	9	B3		10, 12	12, 14, 16	12, 14, 16	46, 50, 54
HFXIN	A	High frequency crystal oscillator (HFXT) signal	8	8	B2		9	11	11	45
HFXOUT	A	High frequency crystal oscillator (HFXT) signal	9	9	B3		10	12	12	46
LFCLK_IN	I	Low frequency clock digital clock input signal		7	A1	7	8	10	10	44
LFXIN	A	Low frequency crystal oscillator (LFXT) signal		6	B1	6	7	9	9	43
LFXOUT	A	Low frequency crystal oscillator (LFXT) signal		7	A1	7	8	10	10	44
ROSC	A	SYSOSC frequency correction loop (FCL) external resistor signal	7	5	C1	5	6	8	8	42

Table 6-6. Comparator (COMP) Signal Descriptions

SIGNAL NAME	PIN TYPE	DESCRIPTION	DGS20 PIN	RUY PIN	YCJ PIN	RGE PIN	RHB PIN	RGZ PIN	PT PIN	PM PIN
COMP0_OUT	O	COMP0 digital output signal	12, 13, 2	12, 14, 15, 20, 26, 6	A4, B1, C2, E3, F2	10, 11, 12, 17, 22, 6	11, 15, 16, 19, 20, 25, 31, 7	13, 19, 22, 27, 30, 31, 38, 39, 47, 9	13, 19, 22, 27, 30, 31, 38, 39, 47, 9	16, 17, 22, 26, 27, 28, 31, 43, 49, 5, 57, 60, 62, 8, 9
COMP0_DAC8	O	COMP0 Reference DAC output	12	12	A4	10	15	19	19	57
COMP0_IN0+	A	COMP0 non-inverting input channel 0			F4					20
COMP0_IN0-	A	COMP0 inverting input channel 0			G3					21
COMP0_IN1+	A	COMP0 non-inverting input channel 1	15	17	C4	14	22	33	33	11
COMP0_IN1-	A	COMP0 inverting input channel 1	14	16	C3	13	21	32	32	10
COMP0_IN2+	A	COMP0 non-inverting input channel 2		13	B4		18	29	29	7
COMP0_IN2-	A	COMP0 inverting input channel 2					17	28	28	6
COMP0_IN3+	A	COMP0 non-inverting input channel 3		14		11	19	30	30	8

Table 6-7. Digital Audio Interface (I2S) Signal Descriptions

SIGNAL NAME	PIN TYPE	DESCRIPTION	DGS20 PIN	RUY PIN	YCJ PIN	RGE PIN	RHB PIN	RGZ PIN	PT PIN	PM PIN
I2S0_BCLK	IO	Digital audio interface (I2S0) bit clock signal	10, 13, 18	10, 21	A2, D3	18, 8	13, 16, 26	17, 27, 40	17, 27, 40	18, 5, 55, 63
I2S0_MCLK	IO	Digital audio interface (I2S0) auxiliary output signal	15	15, 17	C2, C4	12, 14	20, 22	24, 31, 33	24, 31, 33	11, 2, 9
I2S0_WCLK	IO	Digital audio interface (I2S0) word clock signal	14, 19	14, 16, 23	C3, G4	11, 13, 19	12, 19, 21, 27	16, 30, 32, 43	16, 30, 32, 43	10, 24, 54, 62, 8
I2S0_AD0	IO	Digital audio interface (I2S0) audio data 0 signal	11, 16	11, 18, 20	A3, D4, E3	15, 17, 9	14, 17, 23, 25	18, 28, 34, 39	18, 28, 34, 39	12, 17, 56, 6, 64

Copyright © 2025 Texas Instruments Incorporated

Table 6-7. Digital Audio Interface (I2S) Signal Descriptions (continued)

SIGNAL NAME	PIN TYPE	DESCRIPTION	DGS20 PIN	RUY PIN	YCJ PIN	RGE PIN	RHB PIN	RGZ PIN	PT PIN	PM PIN
I2S0_AD1	IO	Digital audio interface (I2S0) audio data 0 signal	12, 17	12, 13, 19	A4, B4, E4	10, 16	15, 18, 24, 28	19, 29, 35, 44	19, 29, 35, 44	1, 13, 25, 57, 7

Table 6-8. General Purpose Input Output Module Signal Descriptions

SIGNAL NAME	PIN TYPE	DESCRIPTION	DGS20 PIN	RUY PIN	YCJ PIN	RGE PIN	RHB PIN	RGZ PIN	PT PIN	PM PIN
PA0	IO	GPIO port A input/output 0		28	E2	24	1	1	1	33
PA1	IO	GPIO port A input/output 1		1	D2	1	2	2	2	34
PA2	IO	GPIO port A input/output 2	7	5	C1	5	6	8	8	42
PA3	IO	GPIO port A input/output 3		6	B1	6	7	9	9	43
PA4	IO	GPIO port A input/output 4		7	A1	7	8	10	10	44
PA5	IO	GPIO port A input/output 5	8	8	B2		9	11	11	45
PA6	IO	GPIO port A input/output 6	9	9	B3		10	12	12	46
PA7	IO	GPIO port A input/output 7					11	13	13	49
PA8	IO	GPIO port A input/output 8					12	16	16	54
PA9	IO	GPIO port A input/output 9	10	10	A2	8	13	17	17	55
PA10	IO	GPIO port A input/output 10	11	11	A3	9	14	18	18	56
PA11	IO	GPIO port A input/output 11	12	12	A4	10	15	19	19	57
PA12	IO	GPIO port A input/output 12	13				16	27	27	5
PA13	IO	GPIO port A input/output 13					17	28	28	6
PA14	IO	GPIO port A input/output 14		13	B4		18	29	29	7
PA15	IO	GPIO port A input/output 15		14		11	19	30	30	8
PA16	IO	GPIO port A input/output 16		15	C2	12	20	31	31	9
PA17	IO	GPIO port A input/output 17	14	16	C3	13	21	32	32	10
PA18	IO	GPIO port A input/output 18	15	17	C4	14	22	33	33	11
PA19	IO	GPIO port A input/output 19	16	18	D4	15	23	34	34	12
PA20	IO	GPIO port A input/output 20	17	19	E4	16	24	35	35	13
PA21	IO	GPIO port A input/output 21		20	E3	17	25	39	39	17
PA22	IO	GPIO port A input/output 22	18	21	D3	18	26	40	40	18
PA23	IO	GPIO port A input/output 23	19	23	G4	19	27	43	43	24
PA24	IO	GPIO port A input/output 24					28	44	44	25
PA25	IO	GPIO port A input/output 25								26
PA26	IO	GPIO port A input/output 26	1	25	F3	21	30	46	46	30
PA27	IO	GPIO port A input/output 27	2	26	F2	22	31	47	47	31
PA28	IO	GPIO port A input/output 28						3	3	35
PA29	IO	GPIO port A input/output 29								36
PA30	IO	GPIO port A input/output 30								37
PA31	IO	GPIO port A input/output 31						5	5	39
PB0	IO	GPIO port B input/output 0								47
PB1	IO	GPIO port B input/output 1								48
PB2	IO	GPIO port B input/output 2						14	14	50
PB3	IO	GPIO port B input/output 3						15	15	51
PB4	IO	GPIO port B input/output 4								52
PB5	IO	GPIO port B input/output 5								53

Copyright © 2025 Texas Instruments Incorporated

Table 6-8. General Purpose Input Output Module Signal Descriptions (continued)

SIGNAL NAME	PIN TYPE	DESCRIPTION	DGS20 PIN	RUY PIN	YCJ PIN	RGE PIN	RHB PIN	RGZ PIN	PT PIN	PM PIN
PB6	IO	GPIO port B input/output 6						20	20	58
PB7	IO	GPIO port B input/output 7						21	21	59
PB8	IO	GPIO port B input/output 8						22	22	60
PB9	IO	GPIO port B input/output 9						23	23	61
PB10	IO	GPIO port B input/output 10								62
PB11	IO	GPIO port B input/output 11								63
PB12	IO	GPIO port B input/output 12								64
PB13	IO	GPIO port B input/output 13								1
PB14	IO	GPIO port B input/output 14						24	24	2
PB15	IO	GPIO port B input/output 15						25	25	3
PB16	IO	GPIO port B input/output 16						26	26	4
PB17	IO	GPIO port B input/output 17						36	36	14
PB18	IO	GPIO port B input/output 18						37	37	15
PB19	IO	GPIO port B input/output 19						38	38	16
PB20	IO	GPIO port B input/output 20						41	41	19
PB21	IO	GPIO port B input/output 21			F4					20
PB22	IO	GPIO port B input/output 22			G3					21
PB23	IO	GPIO port B input/output 23								22
PB24	IO	GPIO port B input/output 24		22				42	42	23
PB25	IO	GPIO port B input/output 25								27
PB26	IO	GPIO port B input/output 26								28

Table 6-9. IOMUX Signal Descriptions

SIGNAL NAME	PIN TYPE	DESCRIPTION	DGS20 PIN	RUY PIN	YCJ PIN	RGE PIN	RHB PIN	RGZ PIN	PT PIN	PM PIN
WAKE	I	Input signal to wake the device from SHUTDOWN mode	11, 12, 14, 15, 4	1, 11, 12, 16, 17, 2, 28	A3, A4, C3, C4, D2, E2, F1	1, 10, 13, 14, 2, 24, 9	1, 14, 15, 2, 21, 22, 3	1, 18, 19, 2, 3, 32, 33, 4, 5	1, 18, 19, 2, 3, 32, 33, 4, 5	10, 11, 33, 34, 35, 38, 39, 56, 57

Table 6-10. Power Management Unit (PMU) Signal Descriptions

SIGNAL NAME	PIN TYPE	DESCRIPTION	DGS20 PIN	RUY PIN	YCJ PIN	RGE PIN	RHB PIN	RGZ PIN	PT PIN	PM PIN
VCORE	PWR	VCORE capacitor connection	3	27	G1	23	32	48	48	32
VDD	PWR	VDD supply	5	3	E1	3	4	6	6	40
VSS	PWR	VSS (ground)	6	4	D1	4	5	7	7	41

Table 6-11. Real-time Clock (RTC) Signal Descriptions

SIGNAL NAME	PIN TYPE	DESCRIPTION	DGS20 PIN	RUY PIN	YCJ PIN	RGE PIN	RHB PIN	RGZ PIN	PT PIN	PM PIN
RTC_OUT	O	Real-time clock output signal	10, 2	10, 26	A2, F2	22, 8	13, 17, 31	17, 28, 47	17, 28, 47	31, 55, 6

Copyright © 2025 Texas Instruments Incorporated

Table 6-12. Serial Wire Debug (SWD) Signal Descriptions

SIGNAL NAME	PIN TYPE	DESCRIPTION	DGS20 PIN	RUY PIN	YCJ PIN	RGE PIN	RHB PIN	RGZ PIN	PT PIN	PM PIN
SWCLK	I	Serial wire debug interface clock input signal	17	19	E4	16	24	35	35	13
SWDIO	IO	Serial wire debug interface data input/output signal	16	18	D4	15	23	34	34	12

Table 6-13. System Controller (SYSCTL) Signal Descriptions

SIGNAL NAME	PIN TYPE	DESCRIPTION	DGS20 PIN	RUY PIN	YCJ PIN	RGE PIN	RHB PIN	RGZ PIN	PT PIN	PM PIN
NRST	I	Active-low reset signal (must be logic high for the device to start)	4	2	F1	2	3	4	4	38

Table 6-14. Timer (TIMx) Signal Descriptions

SIGNAL NAME	PIN TYPE	DESCRIPTION	DGS20 PIN	RUY PIN	YCJ PIN	RGE PIN	RHB PIN	RGZ PIN	PT PIN	PM PIN
TIMA0_C0	IO	TIMA0 capture/compare 0 signal	7	20, 28, 5	C1, E2, E3	17, 24, 5	1, 12, 25, 6	1, 15, 16, 22, 24, 39, 8	1, 15, 16, 22, 24, 39, 8	17, 2, 28, 33, 42, 51, 54, 60
TIMA0_C1	IO	TIMA0 capture/compare 1 signal	10, 18	1, 10, 21, 6	A2, B1, D2, D3	1, 18, 6, 8	11, 13, 2, 26, 7	13, 17, 2, 23, 3, 40, 41, 9	13, 17, 2, 23, 3, 40, 41, 9	18, 19, 34, 35, 43, 49, 52, 55, 61, 64
TIMA0_C2	IO	TIMA0 capture/compare 2 signal	11, 16	11, 14, 18, 6	A3, B1, D4	11, 15, 6, 9	11, 14, 19, 23, 7	13, 18, 24, 30, 34, 36, 41, 9	13, 18, 24, 30, 34, 36, 41, 9	12, 14, 19, 2, 43, 47, 49, 52, 56, 64, 8
TIMA0_C3	IO	TIMA0 capture/compare 3 signal	13, 14, 19	16, 22, 23, 7	A1, C3, G4	13, 19, 7	16, 21, 27, 8	10, 14, 27, 3, 32, 42, 43	10, 14, 27, 3, 32, 42, 43	1, 10, 23, 24, 26, 28, 35, 44, 5, 50
TIMA0_C0N	O	TIMA0 capture/compare 0 complementary output	10, 18	10, 21	A2, D3	18, 8	13, 26	17, 23, 40	17, 23, 40	18, 55, 61
TIMA0_C1N	O	TIMA0 capture/compare 1 complementary output		22, 7	A1	7	8	10, 42	10, 42	1, 23, 26, 44, 53
TIMA0_C2N	O	TIMA0 capture/compare 2 complementary output	12, 17, 7, 9	12, 15, 19, 5, 9	A4, B3, C1, C2, E4	10, 12, 16, 5	10, 15, 20, 24, 6	12, 19, 31, 35, 37, 8	12, 19, 31, 35, 37, 8	13, 15, 42, 46, 48, 53, 57, 9
TIMA0_C3N	O	TIMA0 capture/compare 3 complementary output	15, 7	17, 5	C1, C4	14, 5	17, 22, 28, 6	15, 28, 33, 44, 5, 8	15, 28, 33, 44, 5, 8	11, 25, 39, 42, 51, 6
TIMA_FAL0	I	Timer fault input 0	1, 12, 7, 9	12, 25, 5, 9	A4, B3, C1, F3	10, 21, 5	10, 12, 15, 30, 6	12, 16, 19, 3, 46, 8	12, 16, 19, 3, 46, 8	22, 27, 30, 35, 42, 46, 54, 57
TIMA_FAL1	I	Timer fault input 1	11, 7, 8	11, 28, 5, 8	A3, B2, C1, E2	24, 5, 9	1, 14, 6, 9	1, 11, 18, 41, 8	1, 11, 18, 41, 8	19, 27, 33, 42, 45, 56, 64

Copyright © 2025 Texas Instruments Incorporated

Table 6-14. Timer (TIMx) Signal Descriptions (continued)

SIGNAL NAME	PIN TYPE	DESCRIPTION	DGS20 PIN	RUY PIN	YCJ PIN	RGE PIN	RHB PIN	RGZ PIN	PT PIN	PM PIN
TIMA_FAL2	I	Timer fault input 2	15, 2	1, 17, 26	C4, D2, F2	1, 14, 22	12, 2, 22, 31	16, 2, 20, 33, 47	16, 2, 20, 33, 47	1, 11, 27, 31, 34, 54, 58
TIMG0_C0	IO	TIMG0 capture/compare 0 signal	11, 13, 16, 19, 8	11, 18, 23, 28, 8	A3, B2, D4, E2, G4	15, 19, 24, 9	1, 14, 16, 23, 27, 9	1, 11, 18, 27, 34, 36, 43	1, 11, 18, 27, 34, 36, 43	12, 14, 24, 33, 45, 47, 5, 52, 56, 62
TIMG0_C1	IO	TIMG0 capture/compare 1 signal	12, 17, 9	1, 12, 19, 9	A4, B3, D2, E4	1, 10, 16	10, 15, 17, 2, 24, 28	12, 19, 2, 28, 35, 37, 44	12, 19, 2, 28, 35, 37, 44	13, 15, 25, 34, 46, 48, 53, 57, 6, 63
TIMG6_C0	IO	TIMG6 capture/compare 0 signal	8	13, 20, 8	B2, B4, E3	17	18, 25, 9	11, 14, 20, 29, 39	11, 14, 20, 29, 39	17, 28, 36, 45, 50, 58, 62, 7
TIMG6_C1	IO	TIMG6 capture/compare 1 signal	18, 9	21, 9	B3, D3	18	10, 26	12, 15, 21, 40	12, 15, 21, 40	18, 37, 46, 51, 59, 63
TIMG7_C0	IO	TIMG7 capture/compare 0 signal	1, 14, 19	13, 16, 23, 25, 6	B1, B4, C3, F3, G4	13, 19, 21, 6	18, 21, 27, 30, 7	25, 29, 3, 32, 43, 46, 9	25, 29, 3, 32, 43, 46, 9	10, 24, 3, 30, 35, 43, 7
TIMG7_C1	IO	TIMG7 capture/compare 1 signal	15, 2, 7	17, 26, 5, 7	A1, C1, C4, F2	14, 22, 5, 7	11, 22, 28, 31, 6, 8	10, 13, 26, 33, 38, 44, 47, 5, 8	10, 13, 26, 33, 38, 44, 47, 5, 8	11, 16, 25, 31, 39, 4, 42, 44, 49

Table 6-15. Unified Communication Module (Unicomm) Signal Descriptions

SIGNAL NAME	PIN TYPE	DESCRIPTION	DGS20 PIN	RUY PIN	YCJ PIN	RGE PIN	RHB PIN	RGZ PIN	PT PIN	PM PIN
UC0_CTS	I	Unified Communication Module UC0: UART CTS signal	10, 8	10, 13, 15, 8	A2, B2, B4, C2	12, 8	13, 18, 20, 9	11, 17, 29, 31, 38	11, 17, 29, 31, 38	16, 27, 36, 45, 55, 7, 9
UC0_RTS	O	Unified Communication Module UC0: UART RTS signal	13, 9	14, 9	B3	11	10, 12, 16, 19	12, 16, 27, 30	12, 16, 27, 30	28, 37, 46, 5, 54, 8
UC0_SCL_RX	IO	Unified Communication Module UC0: I2C SCL or UART RX signal	10, 12, 2	1, 10, 12, 26	A2, A4, D2, F2, F4	1, 10, 22, 8	13, 15, 2, 31	17, 19, 2, 36, 47, 5	17, 19, 2, 36, 47, 5	14, 20, 31, 34, 39, 47, 48, 55, 57
UC0_SDA_TX	IO	Unified Communication Module UC0: I2C SDA or UART TX signal	1, 11	11, 25, 28	A3, E2, F3, G3	21, 24, 9	1, 12, 14, 30	1, 16, 18, 3, 37, 41, 46	1, 16, 18, 3, 37, 41, 46	15, 19, 21, 30, 33, 35, 47, 48, 54, 56
UC1_CTS	I	Unified Communication Module UC1: UART CTS signal	13	15, 20, 6	B1, C2, E3	12, 17, 6	16, 20, 25, 7	14, 22, 27, 31, 39, 9	14, 22, 27, 31, 39, 9	17, 22, 36, 43, 5, 50, 60, 9

Table 6-15. Unified Communication Module (Unicomm) Signal Descriptions (continued)

SIGNAL NAME	PIN TYPE	DESCRIPTION	DGS20 PIN	RUY PIN	YCJ PIN	RGE PIN	RHB PIN	RGZ PIN	PT PIN	PM PIN
UC1_RTS	O	Unified Communication Module UC1: UART RTS signal	18, 7	14, 21, 5	C1, D3	11, 18, 5	17, 19, 26, 6	15, 23, 28, 30, 40, 8	15, 23, 28, 30, 40, 8	18, 37, 42, 51, 6, 61, 8
UC1_SCL_RX	IO	Unified Communication Module UC1: I2C SCL or UART RX signal	1, 10, 12, 14, 15, 17, 9	1, 10, 12, 14, 16, 17, 19, 25, 7, 9	A1, A2, A4, B3, C3, C4, D2, E4, F3, G3	1, 10, 11, 13, 14, 16, 21, 7, 8	10, 13, 15, 19, 2, 21, 22, 24, 30, 8	10, 12, 14, 17, 19, 2, 21, 30, 32, 33, 35, 46, 5	10, 12, 14, 17, 19, 2, 21, 30, 32, 33, 35, 46, 5	10, 11, 13, 21, 30, 34, 36, 39, 44, 46, 50, 53, 55, 57, 59, 8
UC1_SDA_TX	IO	Unified Communication Module UC1: I2C SDA or UART TX signal	11, 14, 15, 16, 2, 8	11, 15, 16, 17, 18, 26, 28, 6, 8	A3, B1, B2, C2, C3, C4, D4, E2, F2, F4	12, 13, 14, 15, 22, 24, 6, 9	1, 12, 14, 20, 21, 22, 23, 31, 7, 9	1, 11, 15, 16, 18, 20, 3, 31, 32, 33, 34, 47, 9	1, 11, 15, 16, 18, 20, 3, 31, 32, 33, 34, 47, 9	10, 11, 12, 20, 31, 33, 35, 37, 43, 45, 51, 52, 54, 56, 58, 9
UC2_PICO	O	Unified Communication Module UC2: SPI PICO signal	10, 8	10, 13, 8	A2, B2, B4	8	13, 18, 9	11, 14, 17, 29, 36	11, 14, 17, 29, 36	14, 45, 50, 55, 7
UC2_POCI	I	Unified Communication Module UC2: SPI POCI signal	11	11, 7	A1, A3	7, 9	11, 14, 17, 8	10, 13, 18, 28, 38	10, 13, 18, 28, 38	16, 44, 49, 56, 6
UC2_SCK	IO	Unified Communication Module UC2: SPI SCK signal	12, 13, 9	12, 9	A4, B3	10	10, 15, 16	12, 15, 19, 27, 37	12, 15, 19, 27, 37	15, 46, 5, 51, 57
UC3_PICO_TX	IO	Unified Communication Module UC3: SPI PICO or UART TX signal	1, 11, 15, 19, 9	11, 13, 17, 20, 23, 25, 9	A3, B3, B4, C4, E3, F3, G3, G4	14, 17, 19, 21, 9	10, 14, 18, 22, 25, 27, 30	12, 14, 18, 22, 25, 29, 33, 39, 43, 46	12, 14, 18, 22, 25, 29, 33, 39, 43, 46	11, 17, 21, 24, 26, 3, 30, 46, 50, 56, 60, 64, 7
UC3_POCI_RTS	IO	Unified Communication Module UC3: SPI POCI or UART RTS signal	12, 16, 8	12, 15, 18, 22, 8	A4, B2, C2, D4, F4	10, 12, 15	15, 17, 20, 23, 28, 9	11, 19, 21, 24, 26, 28, 31, 34, 42, 44	11, 19, 21, 24, 26, 28, 31, 34, 42, 44	12, 2, 20, 23, 25, 4, 45, 53, 57, 59, 6, 63, 9
UC3_SCK_RX	IO	Unified Communication Module UC3: SPI SCK or UART RX signal	10, 14, 17, 18, 2	10, 16, 19, 21, 26	A2, C3, D3, E4, F2	13, 16, 18, 22, 8	13, 17, 21, 24, 26, 28, 31	15, 17, 23, 26, 28, 32, 35, 40, 44, 47	15, 17, 23, 26, 28, 32, 35, 40, 44, 47	1, 10, 13, 18, 22, 25, 26, 31, 4, 51, 55, 6, 61
UC2_CS0	O	Unified Communication Module UC2: SPI CS0 signal	13, 15	17, 7	A1, C4	14, 7	12, 16, 22, 8	10, 16, 27, 33	10, 16, 27, 33	11, 27, 44, 5, 54, 64
UC2_CS1	O	Unified Communication Module UC2: SPI CS1 signal	14, 7	16, 22, 5, 6	B1, C1, C3	13, 5, 6	21, 6, 7	20, 32, 42, 8, 9	20, 32, 42, 8, 9	10, 23, 28, 42, 43, 58, 62

Copyright © 2025 Texas Instruments Incorporated

Table 6-15. Unified Communication Module (Unicomm) Signal Descriptions (continued)

SIGNAL NAME	PIN TYPE	DESCRIPTION	DGS20 PIN	RUY PIN	YCJ PIN	RGE PIN	RHB PIN	RGZ PIN	PT PIN	PM PIN
UC2_CS2	O	Unified Communication Module UC2: SPI CS2 signal	18	21	D3	18	11, 26, 28	13, 21, 40, 41, 44	13, 21, 40, 41, 44	18, 19, 25, 37, 48, 49, 59, 63
UC2_CS3	O	Unified Communication Module UC2: SPI CS3 signal	19	1, 14, 20, 22, 23, 6	B1, D2, E3, G4	1, 11, 17, 19, 6	12, 17, 19, 2, 25, 27, 7	16, 2, 24, 28, 30, 39, 42, 43, 5, 9	16, 2, 24, 28, 30, 39, 42, 43, 5, 9	17, 2, 23, 24, 26, 34, 36, 39, 43, 47, 54, 6, 8
UC3_CS0_CTS	IO	Unified Communication Module UC3: SPI CS0 or UART CTS signal	13, 17, 19, 7	19, 23, 5	C1, E4, G4	16, 19, 5	16, 17, 24, 27, 6	20, 25, 27, 28, 35, 41, 43, 8	20, 25, 27, 28, 35, 41, 43, 8	1, 13, 19, 24, 3, 42, 5, 52, 58, 6, 62

Table 6-16. Universal Serial Bus (USB) Signal Descriptions

SIGNAL NAME	PIN TYPE	DESCRIPTION	DGS20 PIN	RUY PIN	YCJ PIN	RGE PIN	RHB PIN	RGZ PIN	PT PIN	PM PIN
USB_DM	IO	USB Data minus signal	1	25	F3	21	30	46	46	30
USB_DP	IO	USB Data positive signal	2	26	F2	22	31	47	47	31
VUSB33	PWR	USB Power Supply signal	20	24	G2	20	29	45	45	29

Table 6-17. Voltage Reference Signal Descriptions

SIGNAL NAME	PIN TYPE	DESCRIPTION	DGS20 PIN	RUY PIN	YCJ PIN	RGE PIN	RHB PIN	RGZ PIN	PT PIN	PM PIN
VREF+	A	Voltage reference positive input	19	23	G4	19	27	43	43	24
VREF-	A	Voltage reference negative input		20	E3	17	25	39	39	17

Copyright © 2025 Texas Instruments Incorporated

6.4 Connections for Unused Pins

Table 6-18 lists the correct termination of unused pins.

Table 6-18. Connection of Unused Pins

PIN [(1)]	POTENTIAL	COMMENT
PAx, PBx	Open	Set corresponding pin functions to GPIO (PINCMx.PF = 0x1) and configure unused pins to output low or input with internal pullup/ pulldown resistor.
NRST	VCC	NRST is an active-low reset signal; it must be pulled high to VCC or the device will not start, for more information refer to Section 9.1

(1) Any unused pin with a function that is shared with general-purpose I/O should follow the "PAx and PBx" unused pin connection guidelines.

Copyright © 2025 Texas Instruments Incorporated

7 Specifications

7.1 Absolute Maximum Ratings

over operating free-air temperature range (unless otherwise noted)[1]

			MIN	MAX	UNIT
VDD	Supply voltage	At VDD pin	–0.3	4.1	V
VUSB33	Supply voltage	At VUSB33 pin	–0.3	4.6	V
V_I	Input voltage	Applied to any 5-V tolerant open-drain pins	–0.3	5.5	V
		Applied to any common tolerance pins	–0.3	V_{DD} + 0.3 (4.1 MAX)	V
		Applied to USB pins (DP, DM)	–0.3	4.6	V
I_{VDD} [3]	Current into VDD pin (source)	-40 °C ≤ T_j ≤ 130 °C		80	mA
	Current into VDD pin (source)	-40 °C ≤ Tj ≤ 90 °C		100	mA
I_{VSS} [3]	Current out of VSS pin (sink)	-40 °C ≤ T_j ≤ 130 °C		80	mA
	Current out of VSS pin (sink)	-40 °C ≤ Tj ≤ 90 °C		100	mA
I_{VUSB33}	Current into VUSB33 pin (source)	-40 °C ≤ T_j ≤ 130 °C		50	mA
I_{IO}	Current of SDIO pin	Current sunk or sourced by SDIO pin, VDD>=2.7V		6	mA
	Current of HSIO pin	Current sunk or sourced by HSIO pin, VDD>=2.7V		6	mA
	Current of HDIO pin	Current sunk or sourced by HDIO pin		20	mA
	Current of ODIO pin	Current sunk by ODIO pin		20	mA
	Current of USBIO pin	Current sunk or sourced by USBIO pin (in GPIO mode)		4	mA
		Current sunk or sourced by USBIO pin (in USB mode)		25	mA
I_D	Supported diode current	Diode current at any device pin (excluding Open Drain IO)	-2	2	mA
T_A	Ambient temperature	Ambient temperature	-40	125	°C
T_J	Junction temperature	Junction temperature	-40	130	°C
T_{stg}	Storage temperature[2]	Storage temperature[2]	–40	150	°C

(1) Operation outside the Absolute Maximum Ratings may cause permanent device damage. Absolute Maximum Ratings do not imply functional operation of the device at these or any other conditions beyond those listed under Recommended Operating Conditions. If used outside the Recommended Operating Conditions but within the Absolute Maximum Ratings, the device may not be fully functional, and this may affect device reliability, functionality, performance, and shorten the device lifetime
(2) Higher temperatures may be applied during board soldering according to the current JEDEC J-STD-020 specification with peak reflow temperatures not higher than classified on the device label on the shipping boxes or reels.
(3) For applications running at VDD=1.62V, I_VDD/I_VSS<=20mA is required to ensure device functionality

7.2 ESD Ratings

			VALUE	UNIT
$V_{(ESD)}$	Electrostatic discharge	Human body model (HBM), per ANSI/ESDA/JEDEC JS-001, all pins[1]	±2000	V
		Charged device model (CDM), per JEDEC specification JESD22-C101, all pins[2]	±500	V

(1) JEDEC document JEP155 states that 500-V HBM allows safe manufacturing with a standard ESD control process.
(2) JEDEC document JEP157 states that 250-V CDM allows safe manufacturing with a standard ESD control process.

7.3 Recommended Operating Conditions

over operating free-air temperature range (unless otherwise noted)

		MIN	NOM	MAX	UNIT
VDD	Supply voltage	1.62		3.6	V
VCORE	Voltage on VCORE pin (2)		1.35		V
VUSB33	Supply voltage for USB DP/DM IOs in USB mode	3	3.3	3.6	V
	Supply voltage for USB DP/DM IOs in GPIO mode	1.62	3.3	3.6	V
C_{VDD}	Capacitor connected between VDD and VSS (1)		10		uF
C_{VCORE}	Capacitor connected between VCORE and VSS (1) (2)		470		nF
T_A	Ambient temperature	–40		125	°C
T_J	Max junction temperature			130	°C
$f_{MCLK\ (PD1\ bus\ clock)}$	MCLK, CPUCLK frequency with 2 flash wait states (3)			80	MHz
	MCLK, CPUCLK frequency with 1 flash wait state (3)			48	
	MCLK, CPUCLK frequency with 0 flash wait states (3)			24	
$f_{ULPCLK\ (PD0\ bus\ clock)}$	ULPCLK frequency			40	MHz

(1) Connect C_{VDD} and C_{VCORE} between VDD/VSS and VCORE/VSS, respectively, as close to the device pins as possible. A low-ESR capacitor with at least the specified value and tolerance of ±20% or better is required for C_{VDD} and C_{VCORE}.
(2) The VCORE pin must only be connected to C_{VCORE}. Do not supply any voltage or apply any external load to the VCORE pin.
(3) Wait states are managed automatically by the system controller (SYSCTL) and do not need to be configured by application software unless MCLK is sourced from a high speed clock source (HSCLK sourced from HFCLK or SYSPLL).

7.4 Thermal Information

THERMAL METRIC(1)		PACKAGE	VALUE	UNIT
$R_{\theta JA}$	Junction-to-ambient thermal resistance	LQFP-64 (PM)	64.4	°C/W
$R_{\theta JC(top)}$	Junction-to-case (top) thermal resistance		24.1	°C/W
$R_{\theta JB}$	Junction-to-board thermal resistance		41.2	°C/W
Ψ_{JT}	Junction-to-top characterization parameter		1.5	°C/W
Ψ_{JB}	Junction-to-board characterization parameter		40.8	°C/W
$R_{\theta JC(bot)}$	Junction-to-case (bottom) thermal resistance		N/A	°C/W
$R_{\theta JA}$	Junction-to-ambient thermal resistance	LQFP-48 (PT)	73.2	°C/W
$R_{\theta JC(top)}$	Junction-to-case (top) thermal resistance		29.3	°C/W
$R_{\theta JB}$	Junction-to-board thermal resistance		44.8	°C/W
Ψ_{JT}	Junction-to-top characterization parameter		1.8	°C/W
Ψ_{JB}	Junction-to-board characterization parameter		44.4	°C/W
$R_{\theta JC(bot)}$	Junction-to-case (bottom) thermal resistance		N/A	°C/W
$R_{\theta JA}$	Junction-to-ambient thermal resistance	VQFN-48 (RGZ)	29.3	°C/W
$R_{\theta JC(top)}$	Junction-to-case (top) thermal resistance		20.3	°C/W
$R_{\theta JB}$	Junction-to-board thermal resistance		12.3	°C/W
Ψ_{JT}	Junction-to-top characterization parameter		0.5	°C/W
Ψ_{JB}	Junction-to-board characterization parameter		12.2	°C/W
$R_{\theta JC(bot)}$	Junction-to-case (bottom) thermal resistance		4.4	°C/W
$R_{\theta JA}$	Junction-to-ambient thermal resistance	VQFN-32 (RHB)	33.6	°C/W
$R_{\theta JC(top)}$	Junction-to-case (top) thermal resistance		25.7	°C/W
$R_{\theta JB}$	Junction-to-board thermal resistance		13.9	°C/W
Ψ_{JT}	Junction-to-top characterization parameter		0.5	°C/W
Ψ_{JB}	Junction-to-board characterization parameter		13.9	°C/W
$R_{\theta JC(bot)}$	Junction-to-case (bottom) thermal resistance		4.4	°C/W

Copyright © 2025 Texas Instruments Incorporated

THERMAL METRIC[1]		PACKAGE	VALUE	UNIT
$R_{\theta JA}$	Junction-to-ambient thermal resistance	WQFN-28 (RUY)	42.6	°C/W
$R_{\theta JC(top)}$	Junction-to-case (top) thermal resistance		29.1	°C/W
$R_{\theta JB}$	Junction-to-board thermal resistance		18.3	°C/W
Ψ_{JT}	Junction-to-top characterization parameter		0.5	°C/W
Ψ_{JB}	Junction-to-board characterization parameter		18.3	°C/W
$R_{\theta JC(bot)}$	Junction-to-case (bottom) thermal resistance		4.8	°C/W
$R_{\theta JA}$	Junction-to-ambient thermal resistance	DSBGA-28 (YCJ)	TBD	°C/W
$R_{\theta JC(top)}$	Junction-to-case (top) thermal resistance		TBD	°C/W
$R_{\theta JB}$	Junction-to-board thermal resistance		TBD	°C/W
Ψ_{JT}	Junction-to-top characterization parameter		TBD	°C/W
Ψ_{JB}	Junction-to-board characterization parameter		TBD	°C/W
$R_{\theta JC(bot)}$	Junction-to-case (bottom) thermal resistance		N/A	°C/W
$R_{\theta JA}$	Junction-to-ambient thermal resistance	VQFN-24 (RGE)	42.3	°C/W
$R_{\theta JC(top)}$	Junction-to-case (top) thermal resistance		34.1	°C/W
$R_{\theta JB}$	Junction-to-board thermal resistance		19	°C/W
Ψ_{JT}	Junction-to-top characterization parameter		0.8	°C/W
Ψ_{JB}	Junction-to-board characterization parameter		19.1	°C/W
$R_{\theta JC(bot)}$	Junction-to-case (bottom) thermal resistance		5	°C/W
$R_{\theta JA}$	Junction-to-ambient thermal resistance	VSSOP-20 (DGS20)	87.7	°C/W
$R_{\theta JC(top)}$	Junction-to-case (top) thermal resistance		30	°C/W
$R_{\theta JB}$	Junction-to-board thermal resistance		44.8	°C/W
Ψ_{JT}	Junction-to-top characterization parameter		0.9	°C/W
Ψ_{JB}	Junction-to-board characterization parameter		44.4	°C/W
$R_{\theta JC(bot)}$	Junction-to-case (bottom) thermal resistance		N/A	°C/W

(1) For more information about traditional and new thermal metrics, see the Semiconductor and IC Package Thermal Metrics application report.

7.5 Supply Current Characteristics

7.5.1 RUN/SLEEP Modes

VDD=3.3V. All inputs tied to 0V or VDD. Outputs do not source or sink any current. All peripherals are disabled.

PARAMETER		MCLK	-40°C		25°C		85°C		105°C		125°C		UNIT
			TYP	MAX	TYP	MAX	TYP	MAX	TYP	MAX	TYP	MAX	
RUN Mode													
IDD_{RUN}	MCLK=SYSPLL, SYSPLLREF=SYSOSC, CoreMark, execute from flash	80MHz	8.1		8.2		8.4		8.5		8.7		mA
		48MHz	5.1		5.3		5.4		5.6		5.8		
	MCLK=SYSOSC, CoreMark, execute from flash	32MHz	3.9		4		4.1		4.2		4.5		
		4MHz	0.7		0.8		0.9		1		1.3		
	MCLK=SYSPLL, SYSPLLREF=SYSOSC, CoreMark, execute from SRAM	80MHz	7.4		7.6		7.7		7.9		8.2		
		48MHz	4.9		5		5.1		5.3		5.6		
	MCLK=SYSOSC, CoreMark, execute from SRAM	32MHz	3.4		3.5		3.6		3.8		4.1		
		4MHz	0.7		0.7		0.9		1		1.3		
IDD_{RUN}, per MHz	MCLK=SYSPLL, SYSPLLREF=SYSOSC, CoreMark, execute from flash	80MHz	101		103		105		106		109		uA/MHz
	MCLK=SYSPLL, SYSPLLREF=SYSOSC, While(1), execute from flash	80MHz	50	60	51	63	53	68	54	77	59	85	
SLEEP Mode													
IDD_{SLEEP}	MCLK=SYSPLL, SYSPLLREF=SYSOSC, CPU is halted	80MHz	2640	3253	2685	3439	2796	3950	2920	4596	3214	5111	uA
		48MHz	2008	2406	2046	2669	2155	3272	2279	3936	2578	4445	
	MCLK=SYSOSC, CPU is halted	32MHz	1518	1848	1548	2001	1654	2603	1776	3240	2070	3861	
		4MHz	479	620	498	660	604	1193	727	1720	1021	2658	
IDD_{SLEEP}, per MHz	MCLK=SYSPLL, SYSPLLREF=SYSOSC, CPU is halted	80MHz	33		34		35		37		40		uA/MHz

7.5.2 STOP/STANDBY Modes

VDD=3.3V. All inputs tied to 0V or VDD. Outputs do not source or sink any current. All peripherals not noted are disabled.

PARAMETER		ULPCLK	-40°C		25°C		85°C		105°C		125°C		UNIT
			TYP	MAX	TYP	MAX	TYP	MAX	TYP	MAX	TYP	MAX	
STOP Mode													
IDD_{STOP0}	SYSOSC=32MHz, USE4MHZSTOP=0, DISABLESTOP=0	4MHz	421	467	427	481	430	530	434	550	445	570	uA
IDD_{STOP1}	SYSOSC=4MHz, USE4MHZSTOP=1, DISABLESTOP=0		195	224	199	229	203	290	208	340	219	370	
IDD_{STOP2}	SYSOSC off, DISABLESTOP=1, ULPCLK=LFCLK	32kHz	53	66	55	72	59	140	63	180	74	230	
STANDBY Mode													

Copyright © 2025 Texas Instruments Incorporated

VDD=3.3V. All inputs tied to 0V or VDD. Outputs do not source or sink any current. All peripherals not noted are disabled.

PARAMETER		ULPCLK	-40°C		25°C		85°C		105°C		125°C		UNIT
			TYP	MAX	TYP	MAX	TYP	MAX	TYP	MAX	TYP	MAX	
IDD_{STBY0}	LFCLK=LFXT, STOPCLKSTBY=0, RTC enabled	32kHz	1.8	5	1.9	5	4	38	7	71	18	99	uA
IDD_{STBY1}	LFCLK=LFOSC, STOPCLKSTBY=1, RTC enabled		1.4	3	1.5	4	4	39	7	67	18	93	
	LFCLK=LFXT, STOPCLKSTBY=1, RTC enabled		1.4	3	1.5	4	4	39	7	67	17	93	
	LFCLK=LFXT, STOPCLKSTBY=1, GPIOA enabled		1.3	3	1.4	4	4	39	7	67	17	93	

7.5.3 SHUTDOWN Mode

All inputs tied to 0V or VDD. Outputs do not source or sink any current. Core regulator is powered down.

PARAMETER		VDD	-40°C		25°C		85°C		105°C		125°C		UNIT
			TYP	MAX	TYP	MAX	TYP	MAX	TYP	MAX	TYP	MAX	
IDD_{SHDN}	Supply current in SHUTDOWN mode	3.3V	52		88		526		1222		3406		nA

7.6 Power Supply Sequencing

7.6.1 Power Supply Ramp

Figure 7-1 gives the relationship of POR- POR+, BOR0-, and BOR0+ during power-up and power-down.

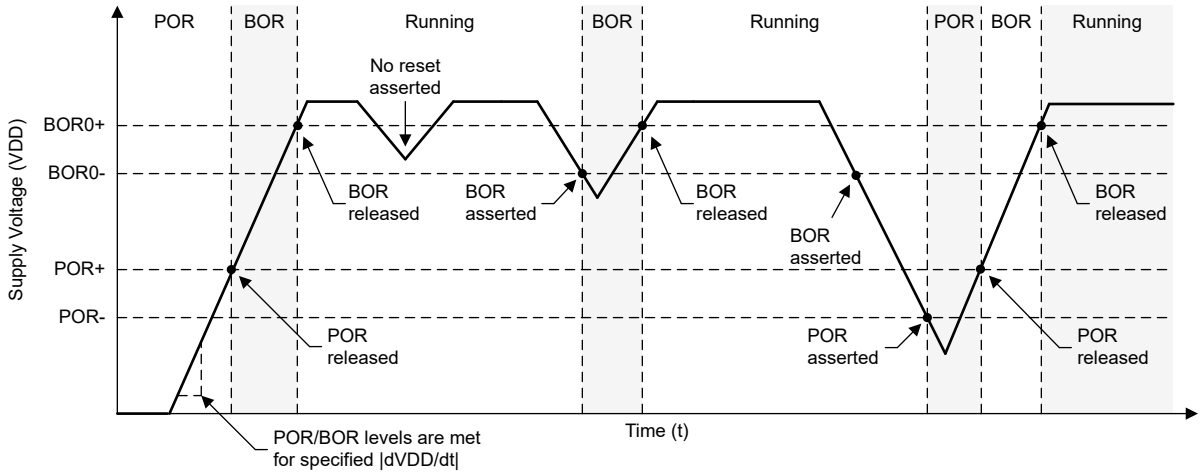

Figure 7-1. Power Cycle POR/BOR Conditions - VDD

7.6.2 POR and BOR

over operating free-air temperature range (unless otherwise noted)

PARAMETER		TEST CONDITIONS	MIN	TYP	MAX	UNIT
dVDD/dt	VDD (supply voltage) slew rate	Rising			0.1	V/us
		Falling[(1)]			0.01	
		Falling, STANDBY			0.1	V/ms
V_{POR+}	Power-on reset voltage level	Rising	0.95	1.30	1.59	V
V_{POR-}		Falling	0.9	1.25	1.54	V
$V_{HYS, POR}$	POR hysteresis		30	58	74	mV

over operating free-air temperature range (unless otherwise noted)

PARAMETER		TEST CONDITIONS	MIN	TYP	MAX	UNIT
$V_{BOR0+, COLD}$	Brown-out reset voltage level 0 (default level)	-40 °C ≤ T_a ≤ 125 °C Cold start, rising	1.40	1.48	1.61	V
V_{BOR0+}		Rising[1]	1.56	1.59	1.62	
V_{BOR0-}		Falling[1]	1.55	1.58	1.61	
$V_{BOR0, STBY}$		STANDBY mode	1.51	1.56	1.61	
V_{BOR1+}	Brown-out-reset voltage level 1	Rising[1]	2.13	2.17	2.21	V
V_{BOR1-}		Falling[1]	2.10	2.14	2.18	
$V_{BOR1, STBY}$		STANDBY mode	2.06	2.13	2.20	
V_{BOR2+}	Brown-out-reset voltage level 2	Rising[1]	2.73	2.77	2.82	V
V_{BOR2-}		Falling[1]	2.7	2.74	2.79	
$V_{BOR2, STBY}$		STANDBY mode	2.62	2.71	2.8	
V_{BOR3+}	Brown-out-reset voltage level 3	Rising[1]	2.88	2.96	3.04	V
V_{BOR3-}		Falling[1]	2.85	2.93	3.01	
$V_{BOR3, STBY}$		STANDBY mode	2.82	2.92	3.02	
$V_{HYS,BOR}$	Brown-out reset hysteresis	Level 0		15	21	mV
		Levels 1-3		34	40	
$T_{PD, BOR}$	BOR propagation delay	RUN/SLEEP/STOP mode			5	us
		STANDBY mode			100	us

(1) Device operating in RUN, SLEEP, or STOP mode.

7.7 Flash Memory Characteristics

over operating free-air temperature range (unless otherwise noted)

PARAMETER		TEST CONDITIONS	MIN	TYP	MAX	UNIT
Supply						
$VDD_{PGM/ERASE}$	Program and erase supply voltage		1.62		3.6	V
IDD_{ERASE}	Supply current from VDD during erase operation	Supply current delta			10	mA
IDD_{PGM}	Supply current from VDD during program operation	Supply current delta			10	mA
Endurance						
NWEC(HI_ENDURANCE)	Erase/program cycle endurance for chosen 32 sectors of flash [1]		100			k cycles
NWEC (NORMAL_ENDURANCE)	Erase/program cycle endurance (Flash not used for HI_ENDURANCE) [1]		10			k cycles
$NE_{(MAX)}$	Total erase operations before failure [2]		802			k erase operations
$NW_{(MAX)}$	Write operations per word line before sector erase [3]				83	write operations
Retention						
t_{RET_85}	Flash memory data retention	-40°C <= Tj <= 85°C	60			years
t_{RET_105}	Flash memory data retention	-40°C <= Tj <= 105°C	11.4			years
Program and Erase Timing						
$t_{PROG (WORD, 64)}$	Program time for flash word [4] [6]			50	275	µs
$t_{PROG (SEC, 64)}$	Program time for 1kB sector [5] [6]			6.4		ms
$t_{ERASE (SEC)}$	Sector erase time	≤2k erase/program cycles, T_j≥25°C		4	20	ms

Copyright © 2025 Texas Instruments Incorporated

over operating free-air temperature range (unless otherwise noted)

PARAMETER		TEST CONDITIONS	MIN	TYP	MAX	UNIT
$t_{ERASE\ (SEC)}$	Sector erase time	≤10k erase/program cycles, T_j≥25°C		20	150	ms
$t_{ERASE\ (SEC)}$	Sector erase time	<10k erase/program cycles		20	200	ms
$t_{ERASE\ (BANK)}$	Bank erase time	<10k erase/program cycles		22	220	ms

(1) Up to 32 application-chosen sectors from the main flash bank(s) or data bank can be used as high endurance sectors. This enables applications that frequently update flash data such as EEPROM emulation.
(2) Total number of cumulative erase operations supported by the flash before failure. A sector erase or bank erase operation is considered to be one erase operation.
(3) Maximum number of write operations allowed per word line before the word line must be erased. If additional writes to the same word line are required, a sector erase is required once the maximum number of write operations per word line is reached.
(4) Program time is defined as the time from when the program command is triggered until the command completion interrupt flag is set in the flash controller.
(5) Sector program time is defined as the time from when the first word program command is triggered until the final word program command completes and the interrupt flag is set in the flash controller. This time includes the time needed for software to load each flash word (after the first flash word) into the flash controller during programming of the sector.
(6) Flash word size is 64 data bits (8 bytes). On devices with ECC, the total flash word size is 72 bits (64 data bits plus 8 ECC bits).

7.8 Timing Characteristics

VDD=3.3V, T_a=25°C (unless otherwise noted)

PARAMETER		TEST CONDITIONS	MIN	TYP	MAX	UNIT
Wakeup Timing						
$t_{WAKE,\ SLEEP}$	Wakeup time from SLEEP0 to RUN (1)			1.5		us
	Wakeup time from SLEEP1 to RUN (1)			1.8		
	Wakeup time from SLEEP2 to RUN (1)			2.4		
$t_{WAKE,\ STOP}$	Wakeup time from STOP0 to RUN (SYSOSC enabled) (1)			8		us
	Wakeup time from STOP1 to RUN (SYSOSC enabled) (1)			10		
	Wakeup time from STOP2 to RUN (SYSOSC disabled) (1)			10		
$t_{WAKE,\ STANDBY}$	Wakeup time from STANDBY0 to RUN (1)			10.9		us
	Wakeup time from STANDBY1 to RUN (1)			10.9		
$t_{WAKEUP,\ SHDN}$	Wakeup time from SHUTDOWN to RUN (2)	Fast boot enabled		285		us
		Fast boot disabled		313		
Asynchronous Fast Clock Request Timing						
$t_{DELAY,\ SLEEP}$	Delay time from edge of asynchronous request to first 32MHz MCLK edge	Mode is SLEEP1		0.34		us
		Mode is SLEEP2		0.94		
$t_{DELAY,\ STOP}$	Delay time from edge of asynchronous request to first 32MHz MCLK edge	Mode is STOP0		0.1		us
		Mode is STOP1		2.4		
		Mode is STOP2		0.9		
$t_{DELAY,\ STANDBY}$	Delay time from edge of asynchronous request to first 32MHz MCLK edge	Mode is STANDBY0		3		us
		Mode is STANDBY1		3.1		
Startup Timing						
$t_{START,\ RESET}$	Device cold startup time from reset/ power-up (3)	Fast boot enabled		310		us
		Fast boot disabled		350		
NRST Timing						
$t_{RST,\ BOOTRST}$	Pulse length on NRST pin to generate BOOTRST	ULPCLK≥4MHz		1.5		us
		ULPCLK=32kHz		29		

VDD=3.3V, T_a=25°C (unless otherwise noted)

PARAMETER		TEST CONDITIONS	MIN	TYP	MAX	UNIT
$t_{RST, POR}$	Pulse length on NRST pin to generate POR			1		s

(1) The wake-up time is measured from the edge of an external wake-up signal (GPIO wake-up event) to the time that the first instruction of the user program is executed, with glitch filter disabled (FILTEREN=0x0) and fast wake enabled (FASTWAKEONLY=1) .
(2) The wake-up time is measured from the edge of an external wake-up signal (IOMUX wake-up event) to the time that first instruction of the user program is executed.
(3) The start-up time is measured from the time that VDD crosses VBOR0- (cold start-up) to the time that the first instruction of the user program is executed.

7.9 Clock Specifications

7.9.1 System Oscillator (SYSOSC)

over operating free-air temperature range (unless otherwise noted)

PARAMETER		TEST CONDITIONS	MIN	TYP	MAX	UNIT
f_{SYSOSC}	Factory trimmed SYSOSC frequency	SYSOSCCFG.FREQ=00 (BASE)		32		MHz
		SYSOSCCFG.FREQ=01		4		
	User trimmed SYSOSC frequency	SYSOSCCFG.FREQ=10, SYSOSCTRIMUSER.FREQ=10		24		
		SYSOSCCFG.FREQ=10, SYSOSCTRIMUSER.FREQ=01		16		
f_{SYSOSC}	SYSOSC frequency accuracy when frequency correction loop (FCL) is enabled and an ideal ROSC resistor is assumed (1) (2)	SETUSEFCL=1, T_a = 25 °C	-0.60		0.68	%
		SETUSEFCL=1, -40 °C ≤ T_a ≤ 85 °C	-0.80		0.93	
		SETUSEFCL=1, -40 °C ≤ T_a ≤ 105 °C	-0.80		1.1	
		SETUSEFCL=1, -40 °C ≤ T_a ≤ 125 °C	-0.80		1.3	
f_{SYSOSC}	SYSOSC accuracy when frequency correction loop (FCL) is enabled with R_{OSC} resistor put at R_{OSC} pin, for factory trimmed frequencies(1) (5) (6)	SETUSEFCL=1, T_a = 25 °C, ±0.1% ±25ppm R_{OSC}	-0.7		0.78	%
		SETUSEFCL=1, -40 °C ≤ T_a ≤ 85 °C, ±0.1% ±25ppm R_{OSC}	-1.1		1.2	
		SETUSEFCL=1, -40 °C ≤ T_a ≤ 105 °C, ±0.1% ±25ppm R_{OSC}	-1.1		1.4	
		SETUSEFCL=1, -40 °C ≤ T_a ≤ 125 °C, ±0.1% ±25ppm R_{OSC}	-1.1		1.7	
f_{SYSOSC}	SYSOSC frequency accuracy when frequency correction loop (FCL) is enabled when the internal ROSC resistor is used, 32MHz(4) (5) (6)	SETUSEFCL=1, T_a = 25 °C	0		1	%
		SETUSEFCL=1, -40 °C ≤ T_a ≤ 125 °C	-2.1		1.6	
f_{SYSOSC}	SYSOSC frequency accuracy when frequency correction loop (FCL) is enabled when the internal ROSC resistor is used, 4MHz(4) (5) (6)	SETUSEFCL=1, T_a = 25 °C	0		1.6	%
		SETUSEFCL=1, -40 °C ≤ T_a ≤ 125 °C	-2.3		1.8	
f_{SYSOSC}	SYSOSC accuracy when frequency correction loop (FCL) is disabled, 32MHz(5) (6)	SETUSEFCL=0, SYSOSCCFG.FREQ=00, -40 °C ≤ T_a ≤ 125 °C	-2.6		1.8	%
f_{SYSOSC}	SYSOSC accuracy when frequency correction loop (FCL) is disabled, for factory trimmed frequencies, 4MHz(5) (6)	SETUSEFCL=0, SYSOSCCFG.FREQ=01, -40 °C ≤ T_a ≤ 125 °C	-2.8		2.1	%
R_{OSC}	External resistor put between ROSC pin and VSS (1)	SETUSEFCL=1		100		kΩ
$t_{settle, SYSOSC}$	Settling time to target accuracy (3)	SETUSEFCL=1, ±0.1% 25ppm R_{OSC} (1)			30	us

(1) The SYSOSC frequency correction loop (FCL) enables high SYSOSC accuracy via an external reference resistor (R_{OSC}) which must be connected between the device ROSC pin and VSS when using the FCL. Accuracies are shown for a ±0.1% ±25ppm R_{OSC}; relaxed tolerance resistors may also be used (with reduced SYSOSC accuracy). See the SYSOSC section of the technical reference manual

Copyright © 2025 Texas Instruments Incorporated

for details on computing SYSOSC accuracy for various R_{OSC} accuracies. R_{OSC} does not need to be populated if the FCL is not enabled.

(2) Represents the device accuracy only. The tolerance and temperature drift of the ROSC resistor used must be combined with this spec to determine final accuracy. Performance for a ±0.1% ±25ppm R_{OSC} is given as a reference point.

(3) When SYSOSC is waking up (for example, when exiting a low power mode) and FCL is enabled, the SYSOSC will initially undershoot the target frequency f_{SYSOSC} by an additional error of up to $f_{settle,SYSOSC}$ for the time $t_{settle,SYSOSC}$, after which the target accuracy is achieved.

(4) The SYSOSC frequency correction loop (FCL) enables high SYSOSC accuracy via an internal reference resistor when using the FCL. See the SYSOSC section of the technical reference manual for details on computing SYSOSC accuracy.

(5) SYSOSC Accuracy is measured in the default power-up state, with MCLK = SYSOSC, the CPU is running a while(1) loop, and the SYSPLL is disabled.

(6) SYSOSC is measured with the internal FCC counter using an external 1ms pulse as the measurement trigger.

7.9.2 Low Frequency Oscillator (LFOSC)

over operating free-air temperature range (unless otherwise noted)

PARAMETER		TEST CONDITIONS	MIN	TYP	MAX	UNIT
f_{LFOSC}	LFOSC frequency			32768		Hz
	LFOSC accuracy	-40 °C ≤ T_a ≤ 125 °C	–5		5	%
		-40 °C ≤ T_a ≤ 85 °C	–3		3	%
I_{LFOSC}	LFOSC current consumption			300		nA
$t_{start, LFOSC}$	LFOSC start-up time			1		ms

7.9.3 System Phase Lock Loop (SYSPLL)

over operating free-air temperature range (unless otherwise noted)

PARAMETER		TEST CONDITIONS	MIN	TYP	MAX	UNIT
$f_{SYSPLLREF}$	SYSPLL reference frequency range(2)		4		48	MHz
f_{VCO}	VCO output frequency		80		400	MHz
f_{SYSPLL}	SYSPLL output frequency range (1)	SYSPLLCLK0, SYSPLLCLK1	2.5		200	MHz
		SYSPLLCLK2X	10		400	
DC_{PLL}	SYSPLL output duty cycle	$f_{SYSPLLREF}$=32MHz, f_{VCO}=160MHz	45		55	%
$Jitter_{SYSPLL}$	SYSPLL RMS cycle-to-cycle jitter(3)	$f_{SYSPLLREF}$=32MHz, f_{VCO}=160MHz		60		ps
	SYSPLL RMS period jitter(3)			45		
I_{SYSPLL}	SYSPLL current consumption	$f_{SYSPLLREF}$=32MHz, f_{VCO}=160MHz		322		uA
$t_{start, SYSPLL}$	SYSPLL start-up time	$f_{SYSPLLREF}$=32MHz, PDIV=3, QDIV=39, f_{VCO}=160MHz, ±0.5% accuracy		14	24	us

(1) The SYSPLL may support higher output frequencies than the device clock system supports. Ensure that the device maximum frequency specifications are not violated when configuring the SYSPLL output frequencies.

(2) Please refer to SYSPLL tuning parameters in Table 2-6 inside the _:AMP:_

(3) PDIV=2 (8MHz loop frequency) is recommended for optimal performance

7.9.4 USB Frequency Lock Loop (USBFLL)

over operating free-air temperature range (unless otherwise noted)

PARAMETER		TEST CONDITIONS	MIN	TYP	MAX	UNIT
$f_{USBFLLREF}$	USBFLL reference frequency range	USBFLLREF=LFXT		32768		Hz
		USBFLLREF=SOF		1000		
f_{USBFLL}	USBFLL output frequency			60		MHz
	USBFLL output frequency accuracy	Locked	-0.25		0.25	%
	USBFLL output frequency accuracy	Unlocked	-8		6	%
I_{USBFLL}	USBFLL current consumption	f_{USBFLL}=60MHz		480		uA
$t_{start, USBFLL}$	USBFLL start-up time	Unlocked (Loop=disable)			170	ns

over operating free-air temperature range (unless otherwise noted)

PARAMETER		TEST CONDITIONS	MIN	TYP	MAX	UNIT
$t_{lock,\ USBFLL}$	USBFLL lock time	f_{USBFLL}=60MHz, ±0.25% accuracy, USBFLLREF=LFXT		0.3	1	ms
$t_{lock,\ USBFLL}$		f_{USBFLL}=60MHz, ±0.25% accuracy, USBFLLREF=SOF		5	16	ms

7.9.5 Low Frequency Crystal/Clock

over operating free-air temperature range (unless otherwise noted)

PARAMETER		TEST CONDITIONS	MIN	TYP	MAX	UNIT
Low frequency crystal oscillator (LFXT)						
f_{LFXT}	LFXT frequency			32768		Hz
DC_{LFXT}	LFXT duty cycle		30		70	%
OA_{LFXT}	LFXT crystal oscillation allowance			419		kΩ
$C_{L,\ eff}$	Integrated effective load capacitance(1)			1		pF
$t_{start,\ LFXT}$	LFXT start-up time	Fast LFXT start-up enabled(4)		200		ms
I_{LFXT}	LFXT current consumption	XT1DRIVE=0, LOWCAP=1		200		nA
Low frequency digital clock input (LFCLK_IN)						
f_{LFIN}	LFCLK_IN frequency (2)	SETUSEEXLF=1	29491	32768	36045	Hz
DC_{LFIN}	LFCLK_IN duty cycle (2)	SETUSEEXLF=1	40		60	%
LFCLK Monitor						
$f_{FAULTLF}$	LFCLK monitor fault frequency (3)	MONITOR=1	2800	4200	8400	Hz

(1) This includes parasitic bond and package capacitance (≈2pF per pin), calculated as $C_{LFXIN} \times C_{LFXOUT}/(C_{LFXIN}+C_{LFXOUT})$, where C_{LFXIN} and C_{LFXOUT} are the total capacitance at LFXIN and LFXOUT, respectively.
(2) The digital clock input (LFCLK_IN) accepts a logic level square wave clock.
(3) The LFCLK monitor may be used to monitor the LFXT or LFCLK_IN. It will always fault below the MIN fault frequency, and will never fault above the MAX fault frequency.
(4) When using LFXT, the user must ensure that the crystal is properly rated to support the start-up drive load (e.g. 0.1uW)

7.9.6 High Frequency Crystal/Clock

over operating free-air temperature range (unless otherwise noted)

PARAMETER		TEST CONDITIONS	MIN	TYP	MAX	UNIT
High frequency crystal oscillator (HFXT)						
f_{HFXT}	HFXT frequency	HFXTRSEL=00	4		8	MHz
		HFXTRSEL=01	8.01		16	
		HFXTRSEL=10	16.01		32	
		HFXTRSEL=11	32.01		48	
DC_{HFXT}	HFXT duty cycle	HFXTRSEL=00	40		65	%
		HFXTRSEL=01	40		60	
		HFXTRSEL=10	40		60	
		HFXTRSEL=11	40		60	
OA_{HFXT}	HFXT crystal oscillation allowance	HFXTRSEL=00 (4 to 8MHz range)		2		kΩ
$C_{L,\ eff}$	Integrated effective load capacitance(1)			1		pF
$t_{start,\ HFXT}$	HFXT start-up time (2)	HFXTRSEL=11, 32MHz crystal		0.5		ms
I_{HFXT}	HFXT current consumption(2)	f_{HFXT}=4MHz, R_m=300Ω, C_L=12pF		100		uA
		f_{HFXT}=48MHz, R_m=30Ω, C_L=12pF, C_m=6.26fF, L_m=1.76mH		600		
High frequency digital clock input (HFCLK_IN)						
f_{HFIN}	HFCLK_IN frequency (3)	USEEXTHFCLK=1	4		48	MHz

Copyright © 2025 Texas Instruments Incorporated

over operating free-air temperature range (unless otherwise noted)

PARAMETER		TEST CONDITIONS	MIN	TYP	MAX	UNIT
DC_{HFIN}	HFCLK_IN duty cycle [3]	USEEXTHFCLK=1	40		60	%

(1) This includes parasitic bond and package capacitance (≈2pF per pin), calculated as $C_{HFXIN} \times C_{HFXOUT}/(C_{HFXIN}+C_{HFXOUT})$, where C_{HFXIN} and C_{HFXOUT} are the total capacitance at HFXIN and HFXOUT, respectively.
(2) The HFXT startup time ($t_{start, HFXT}$) is measured from the time the HFXT is enabled until stable oscillation for a typical crystal. Start-up time is dependent upon crystal frequency and crystal specifications. Refer to the HFXT section of the MSPM0 G-Series 80-MHz Microcontrollers Technical Reference Manual.Current consumption increases with higher RSEL and start up time is decreases with higher RSEL.
(3) The digital clock input (HFCLK_IN) accepts a logic level square wave clock.

7.10 Digital IO

7.10.1 Electrical Characteristics

over recommended ranges of supply voltage and operating free-air temperature (unless otherwise noted)

PARAMETER		TEST CONDITIONS		MIN	TYP	MAX	UNIT
V_{IH}	High level input voltage	ODIO [1]	VDD≥1.62V	0.7*VDD		5.5	V
			VDD≥2.7V	2		5.5	V
		USBIO	GPIO mode VUSB33≥1.62V	0.7*VUSB33		VUSB33+0.3	V
		All I/O except ODIO & Reset	VDD≥1.62V	0.7*VDD		VDD+0.3	V
V_{IL}	Low level input voltage	ODIO	VDD≥1.62V	-0.3		0.3*VDD	V
			VDD≥2.7V	-0.3		0.8	V
		USBIO	GPIO mode VUSB33≥1.62V	-0.3		0.3*VUSB33	V
		All I/O except ODIO & Reset	VDD≥1.62V	-0.3		0.3*VDD	V
V_{HYS}	Hysteresis	ODIO		0.05*VDD			V
		USBIO	GPIO mode VUSB33≥1.62V	0.1*VUSB33			V
		All I/O except ODIO		0.1*VDD			V
I_{lkg}	High-Z leakage current (All packages except PM)	SDIO[2] [3]	1.62V ≤ VDD ≤ 3.6V, -40 °C ≤ T_a ≤ 125 °C			50[4]	nA
	High-Z leakage current (PM package)	SDIO[2] [3]	1.62V ≤ VDD ≤ 3.6V, -40 °C ≤ T_a ≤ 25 °C			70[4]	nA
			1.62V ≤ VDD ≤ 3.6V, -40 °C ≤ T_a ≤ 125 °C			400[4]	nA
I_{lkg}	High-Z leakage current	USBIO[2] [3]	1.62V ≤ VUSB33 ≤ 3.6V, T_a = 25 °C		10[4]		nA
			1.62V ≤ VUSB33 ≤ 3.6V, T_a = 125 °C		200[4]		nA
R_{PU}	Pull up resistance	All I/O except ODIO and USBIO	VIN = VSS		40		kΩ
		USBIO	GPIO mode IN = VSS		33		kΩ
R_{PD}	Pull down resistance	All I/O except USBIO	VIN = VDD		40		kΩ
		USBIO	GPIO mode VIN = VUSB33		14		kΩ
C_I	Input capacitance		VDD = 3.3V		5		pF

over recommended ranges of supply voltage and operating free-air temperature (unless otherwise noted)

PARAMETER		TEST CONDITIONS		MIN	TYP	MAX	UNIT
V_{OH}	High level output voltage	SDIO	VDD≥2.7V, $\lvert I_{IO}\rvert_{,max}$=6mA VDD≥1.71V, $\lvert I_{IO}\rvert_{,max}$=2mA VDD≥1.62V, $\lvert I_{IO}\rvert_{,max}$=1.5mA -40 °C ≤ T_a ≤ 25 °C	VDD-0.4			V
			VDD≥2.7V, $\lvert I_{IO}\rvert_{,max}$=6mA VDD≥1.71V, $\lvert I_{IO}\rvert_{,max}$=2mA VDD≥1.62V, $\lvert I_{IO}\rvert_{,max}$=1.5mA -40 °C ≤ T_a ≤ 125 °C	VDD-0.45			
		HSIO	VDD≥2.7V, DRV=1, $\lvert I_{IO}\rvert_{,max}$=6mA VDD≥1.71V, DRV=1, $\lvert I_{IO}\rvert_{,max}$=3mA VDD≥1.62V, DRV=1, $\lvert I_{IO}\rvert_{,max}$=2mA -40 °C ≤ T_a ≤ 25 °C	VDD-0.4			
			VDD≥2.7V, DRV=1, $\lvert I_{IO}\rvert_{,max}$=6mA VDD≥1.71V, DRV=1, $\lvert I_{IO}\rvert_{,max}$=3mA VDD≥1.62V, DRV=1, $\lvert I_{IO}\rvert_{,max}$=2mA -40 °C ≤ T_a ≤ 125 °C	VDD-0.45			
			VDD≥2.7V, DRV=0, $\lvert I_{IO}\rvert_{,max}$=4mA VDD≥1.71V, DRV=0, $\lvert I_{IO}\rvert_{,max}$=2mA VDD≥1.62V, DRV=0, $\lvert I_{IO}\rvert_{,max}$=1.5mA -40 °C ≤ T_a ≤ 25 °C	VDD-0.4			
			VDD≥2.7V, DRV=0, $\lvert I_{IO}\rvert_{,max}$=4mA VDD≥1.71V, DRV=0, $\lvert I_{IO}\rvert_{,max}$=2mA VDD≥1.62V, DRV=0, $\lvert I_{IO}\rvert_{,max}$=1.5mA -40 °C ≤ T_a ≤ 125 °C	VDD-0.45			
		HDIO	VDD≥2.7V, DRV=1[(5)], $\lvert I_{IO}\rvert_{,max}$=20mA VDD≥1.71V, DRV=1[(5)], $\lvert I_{IO}\rvert_{,max}$=10mA	VDD-0.4			
			VDD≥2.7V, DRV=0, $\lvert I_{IO}\rvert_{,max}$=6mA VDD≥1.71V, DRV=0, $\lvert I_{IO}\rvert_{,max}$=2mA	VDD-0.4			
		USBIO	GPIO mode VUSB33≥2.7V, $\lvert I_{IO}\rvert_{,max}$=4mA VUSB33≥1.71V, $\lvert I_{IO}\rvert_{,max}$=2mA VUSB33≥1.62V, $\lvert I_{IO}\rvert_{,max}$=1.5mA	0.8*VUSB33			

Copyright © 2025 Texas Instruments Incorporated

over recommended ranges of supply voltage and operating free-air temperature (unless otherwise noted)

PARAMETER		TEST CONDITIONS		MIN	TYP	MAX	UNIT
V_{OL}	Low level output voltage	SDIO	VDD≥2.7V, $\|I_{IO}\|_{,max}$=6mA VDD≥1.71V, $\|I_{IO}\|_{,max}$=2mA VDD≥1.62V, $\|I_{IO}\|_{,max}$=1.5mA -40 °C ≤ T_a ≤ 25 °C			0.4	V
			VDD≥2.7V, $\|I_{IO}\|_{,max}$=6mA VDD≥1.71V, $\|I_{IO}\|_{,max}$=2mA VDD≥1.62V, $\|I_{IO}\|_{,max}$=1.5mA -40 °C ≤ T_a ≤ 125 °C			0.45	
		HSIO	VDD≥2.7V, DRV=1, $\|I_{IO}\|_{,max}$=6mA VDD≥1.71V, DRV=1, $\|I_{IO}\|_{,max}$=3mA VDD≥1.62V, DRV=1, $\|I_{IO}\|_{,max}$=2mA -40 °C ≤ T_a ≤ 25 °C			0.4	
			VDD≥2.7V, DRV=1, $\|I_{IO}\|_{,max}$=6mA VDD≥1.71V, DRV=1, $\|I_{IO}\|_{,max}$=3mA VDD≥1.62V, DRV=1, $\|I_{IO}\|_{,max}$=2mA -40 °C ≤ T_a ≤ 125 °C			0.45	
			VDD≥2.7V, DRV=0, $\|I_{IO}\|_{,max}$=4mA VDD≥1.71V, DRV=0, $\|I_{IO}\|_{,max}$=2mA VDD≥1.62V, DRV=0, $\|I_{IO}\|_{,max}$=1.5mA -40 °C ≤ T_a ≤ 25 °C			0.4	
			VDD≥2.7V, DRV=0, $\|I_{IO}\|_{,max}$=4mA VDD≥1.71V, DRV=0, $\|I_{IO}\|_{,max}$=2mA VDD≥1.62V, DRV=0, $\|I_{IO}\|_{,max}$=1.5mA -40 °C ≤ T_a ≤ 125 °C			0.45	
		HDIO	VDD≥2.7V, DRV=1[(5)], $\|I_{IO}\|_{,max}$=20mA VDD≥1.71V, DRV=1[(5)], $\|I_{IO}\|_{,max}$=10mA			0.4	
			VDD≥2.7V, DRV=0, $\|I_{IO}\|_{,max}$=6mA VDD≥1.71V, DRV=0, $\|I_{IO}\|_{,max}$=2mA			0.4	
		USBIO	GPIO mode VUSB33≥2.7V, $\|I_{IO}\|_{,max}$=4mA VUSB33≥1.71V, $\|I_{IO}\|_{,max}$=2mA VUSB33≥1.62V, $\|I_{IO}\|_{,max}$=1.5mA			0.2*VUSB33	
		ODIO	VDD≥2.7V, $I_{OL,max}$=8mA VDD≥1.71V, $I_{OL,max}$=4mA -40 °C ≤ T_a ≤ 25 °C			0.4	
			VDD≥2.7V, $I_{OL,max}$=8mA VDD≥1.71V, $I_{OL,max}$=4mA -40 °C ≤ T_a ≤ 125 °C			0.45	

(1) I/O Types: ODIO = 5V Tolerant Open-Drain , SDIO = Standard-Drive , HSIO = High-Speed, HDIO = High-Drive, USBIO = USB protocol
(2) The leakage current is measured with VSS or VDD applied to the corresponding pin(s), unless otherwise noted.
(3) The leakage of the digital port pins is measured individually. The port pin is selected for input and the pullup/pulldown resistor is disabled.
(4) This value is for SDIO not muxed with any analog inputs. If the SDIO is muxed with analog inputs then the leakage can be higher.
(5) When operating a HDIO in DRV=1 high drive strength configuration, a series resistor is necessary to limit the signal slew rate

7.10.2 Switching Characteristics

over recommended ranges of supply voltage and operating free-air temperature (unless otherwise noted)

PARAMETER		TEST CONDITIONS		MIN	TYP	MAX	UNIT
f_{max}	Port output frequency(1)	SDIO	VDD ≥ 2.7V, CL= 20pF			32	MHz
			VDD ≥ 1.71V, CL= 20pF			16	
		HSIO	VDD ≥ 2.7V, DRV = 1, CL= 20pF			40	
			VDD ≥ 2.7V, DRV = 0, CL= 20pF			32	
			VDD ≥ 1.71V, DRV = 1, CL= 20pF			24	
			VDD ≥ 1.71V, DRV = 0, CL= 20pF			16	
		HDIO	VDD ≥ 2.7V, DRV = 1(2), CL= 20pF			20	
			VDD ≥ 2.7V, DRV = 0, CL= 20pF			20	
			VDD ≥ 1.71V, DRV = 1(2), CL= 20pF			16	
			VDD ≥ 1.71V, DRV = 0, CL= 20pF			16	
		USBIO	GPIO mode VUSB33 ≥ 2.7V, CL= 20pF			32	
			GPIO mode VUSB33 ≥ 1.71V, CL= 20pF			16	
		ODIO	VDD ≥ 1.71V, FM+, CL= 20pF - 100pF			1	
t_r,t_f	Output rise/fall time	SDIO	VDD ≥ 2.7V, CL= 20pF			3.5	ns
			VDD ≥ 1.71V, C_L= 20pF			6.6	
		HSIO	VDD ≥ 2.7V, DRV = 1, CL= 20pF			1.8	
			VDD ≥ 2.7V, DRV = 0, CL= 20pF			5.9	
			VDD ≥ 1.71V, DRV = 1, CL= 20pF			3.7	
			VDD ≥ 1.71V, DRV = 0, CL= 20pF			12.6	
		HDIO	VDD ≥ 2.7V, DRV = 1, CL= 20pF			1.7	
			VDD ≥ 2.7V, DRV = 0, CL= 20pF			3.8	
			VDD ≥ 1.71V, DRV = 1, CL= 20pF			3.1	
			VDD ≥ 1.71V, DRV = 0, CL= 20pF			8.2	
		USBIO	GPIO mode VUSB33 ≥ 2.7V, CL= 20pF			7	
			GPIO mode VUSB33 ≥ 1.71V, CL= 20pF			14	
t_f	Output fall time	ODIO	VDD ≥ 1.71V, FM+, CL= 20pF-100pF	20*VDD/5.5		120	ns

(1) I/O Types: ODIO = 5V Tolerant Open-Drain , SDIO = Standard-Drive , HSIO = High-Speed , HDIO = High-Drive, USBIO = USB protocol
(2) When operating a HDIO in DRV=1 high drive strength configuration, a series resistor is necessary to limit the signal slew rate

7.11 Analog Mux VBOOST

over operating free-air temperature range (unless otherwise noted)

PARAMETER		TEST CONDITIONS	MIN	TYP	MAX	UNIT
I_{VBST}	VBOOST current adder	MCLK/ULPCLK is LFCLK		0.8		uA
		MCLK/ULPCLK is not LFCLK, SYSOSC frequency is 4MHz		10.6		
$t_{START,VBST}$	VBOOST startup time			12	20	us

Copyright © 2025 Texas Instruments Incorporated

7.12 ADC

7.12.1 Electrical Characteristics

over recommended ranges of supply voltage and operating free-air temperature (unless otherwise noted), all TYP values are measured at 25°C and all accuracy parameters are measured using 12-bit resolution mode (unless otherwise noted)

PARAMETER		TEST CONDITIONS	MIN	TYP	MAX	UNIT
$Vin_{(ADC)}$	Analog input voltage range[1]	Applies to all ADC analog input pins	0		VDD	V
V_{R+}	Positive ADC reference voltage	V_{R+} sourced from VDD		VDD		V
		V_{R+} sourced from external reference pin (VREF+)	1.4		VDD	V
		V_{R+} sourced from internal reference (VREF)		VREF		V
V_{R-}	Negative ADC reference voltage			0		V
Fs	ADC sampling frequency	RES = 0x0 (12-bit mode), External/Internal Reference(VRSEL=1h)			1.6	Msps
		RES = 0x1 (10-bit mode), External/Internal Reference(VRSEL1h)			1.7	
		RES = 0x2 (8-bit mode), External/Internal Reference(VRSEL=1h)			2	
F_S	ADC sampling frequency	RES = 0x0 (12-bit mode), Internal Reference(VRSEL=2h)			0.9	Msps
		RES = 0x1 (10-bit mode), Internal Reference(VRSEL=2h)			1	
		RES = 0x2 (8-bit mode), Internal Reference(VRSEL=2h)			1.2	
$I_{(ADC)}$	Operating supply current into VDD terminal	F_S = 1.6MSPS, External reference(VRSEL=1h),V_{R+} = VDD		350		µA
$I_{(ADC)}$	Operating supply current into VDD terminal	F_S = 1.6MSPS, Internal reference(VRSEL=1h),VREF = 2.5V (VREF1 power consumption included)		550		µA
		F_S = 0.9MSPS,Internal reference(VRSEL=2h),VREF = 2.5V (VREF2 power consumption included)		400		
$C_{S/H}$	ADC sample-and-hold capacitance			0.22		pF
Rin	ADC switch resistance			15		kΩ
ENOB	Effective number of bits	Fin=10kHz,External Reference(VRSEL=1h)[2]	10	10.6		bit
		Fin=1kHz,External reference with over sampling[2]		11.8		
		Fin=10kHz,Internal reference(VRSEL=1h or 2h), VREF = 2.5V	9.2	10.2		
SNR	Signal-to-noise ratio	Fin=10kHz,External Reference(VRSEL=1h)[2]		67		dB
		Fin=1kHz,External reference with over sampling[2]		75		
		Fin=10kHz,Internal reference(VRSEL=1h or 2h), V_{R+} = VREF = 2.5V		62		
$PSRR_{DC}$	Power supply rejection ratio, DC	External reference(VRSEL=1h), VDD = $VDD_{(min)}$ to $VDD_{(max)}$ [2]		66		dB
		Internal reference(VRSEL=1h or 2h), V_{R+} = VREF = 2.5V, VDD=2.7 to 3.6		60		dB
T_{wakeup}	ADC Wakeup Time	Assumes internal reference is active			5	us
$V_{SupplyMon}$	Supply Monitor voltage divider (VDD/3) accuracy	ADC input channel: Supply Monitor [3]	-1.5		+1.5	%
$I_{SupplyMon}$	Supply Monitor voltage divider current consumption	ADC input channel: Supply Monitor		10		uA
V_{USBMon}	Supply Monitor voltage divider (VUSB33/3) accuracy	ADC input channel: VUSB Monitor [4]	-1.5		+1.5	%
I_{USBMon}	Supply Monitor voltage divider current consumption	ADC input channel: VUSB Monitor		10		uA

(1) The analog input voltage range must be within the selected ADC reference voltage range V_{R+} to V_{R-} for valid conversion results.
(2) All external reference specifications are measured with V_{R+} = VREF+ = VDD = 3.3V and V_{R-} = VREF- = VSS = 0V and external 1uF cap on VREF+ pin
(3) Analog power supply monitor. Analog input on channel 31 is disconnected and is internally connected to the voltage divider which is VDD/3.
(4) Analog VUSB monitor. Analog input on channel 30 is disconnected and is internally connected to the voltage divider which is VUSB33/3.

7.12.2 Switching Characteristics

over recommended ranges of supply voltage and operating free-air temperature (unless otherwise noted)

PARAMETER		TEST CONDITIONS	MIN	TYP	MAX	UNIT
f_{ADCCLK}	ADC clock frequency		4		32	MHz
$t_{ADC\ trigger}$	Software trigger minimum width		3			ADCCLK cycles
t_{Sample_step}	Sampling time for step input	12-bit mode, R_S = 50Ω, C_{pext} = 10pF	188			ns
t_{Sample_VREF}	Sample time with VREF	ADC CHANNEL=28,12-bit mode, VDD as reference	4			µs
$t_{Sample_SupplyMon}$	Sample time with Supply Monitor (VDD/3)	ADC CHANNEL=31,12-bit mode,Internal reference(VRSEL=1h or 2h)	5			µs
t_{Sample_USBMon}	Sample time with VUSB Monitor (VUSB33/3)	ADC CHANNEL=30,12-bit mode,Internal reference(VRSEL=1h or 2h)	5			µs

7.12.3 Linearity Parameters

over recommended ranges of supply voltage and operating free-air temperature (unless otherwise noted), all TYP values are measured at 25℃ and all linearity parameters are measured using 12-bit resolution mode (unless otherwise noted) (1)

PARAMETER		TEST CONDITIONS	MIN	TYP	MAX	UNIT
E_I	Integral linearity error (INL)	External reference	-2		2	LSB
E_D	Differential linearity error (DNL)	External reference (2)	-1		1	LSB
E_O	Offset error	External reference (2)	-5		5	mV
E_G	Gain error	External reference(VRSEL=1h) (2)	-6		6	LSB

(1) Total Unadjusted Error (TUE) can be calculated from E_I , E_O , and E_G using the following formula: TUE = $\sqrt{(E_I^{\ 2} + |E_O|^2 + E_G^{\ 2})}$
Note: You must convert all of the errors into the same unit, usually LSB, for the above equation to be accurate
(2) VDD reference specifications are measured with V_{R+} = VDD = 3.3V and V_{R-} = VSS = 0V.

7.12.4 Typical Connection Diagram

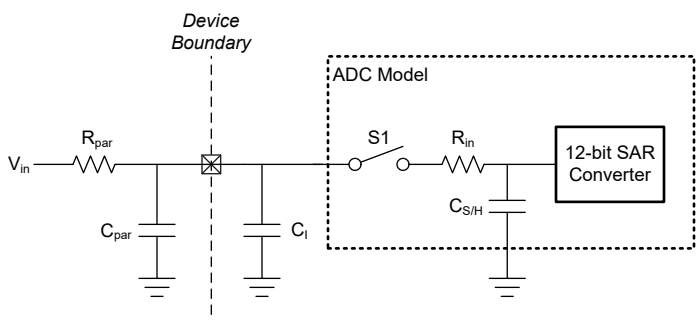

Figure 7-2. ADC Input Network

1. Refer to Electrical Characteristics for the values of R_{in} and $C_{S/H}$
2. Refer to Electrical Characteristics for the value of C_I
3. C_{par} and R_{par} represent the parasitic capacitance and resistance of the external ADC input circuitry

Use the following equations to solve for the minimum sampling time (T) required for an ADC conversion:

1. Tau = $(R_{par} + R_{in})* C_{S/H} + R_{par}*(C_{par} + C_I)$
2. K= $\ln(2^n/\text{Settling error}) – \ln((C_{par} + C_I)/C_{S/H})$
3. T (Min sampling time) = K*Tau

Copyright © 2025 Texas Instruments Incorporated

7.13 Temperature Sensor

over operating free-air temperature range (unless otherwise noted)[1]

PARAMETER		TEST CONDITIONS	MIN	TYP	MAX	UNIT
TS_{TRIM}	Factory trim temperature [2]	ADC and VREF configuration: RES=0 (12-bit mode), VRSEL=2h (VREF=1.4V), cap=1uF on VREF+, ADC t_{Sample}=12.5µs	27	30	33	°C
TS_c	Temperature coefficient	-40 °C ≤ T_j ≤ 130 °C	-2.05	-1.9	-1.75	mV/°C
$t_{SET, TS}$	Temperature sensor settling time [3]	ADC and VREF configuration: RES=0 (12-bit mode), VRSEL= 2h (VREF=1.4V), ADC CHANNEL=29			12.5	us

(1) Effective absolute temperature accuracy may be computed by combining the relative temperature accuracy together with the trim accuracy, and accounting for any analog to digital conversion error.
(2) Higher absolute accuracy may be achieved through user calibration. Please refer to temperature sensor chapter in detailed description section.
(3) This is the minimum required ADC sampling time when measuring the temperature sensor.

7.14 VREF1

7.14.1 Voltage Characteristics (VREF1)

over recommended ranges of supply voltage and operating free-air temperature (unless otherwise noted)

PARAMETER		TEST CONDITIONS	MIN	TYP	MAX	UNIT
VDD_{min}	Minimum supply voltage needed for VREF operation	BUFCONFIG = 1	1.62			V
		BUFCONFIG = 0	2.7			
VREF	Voltage reference output voltage	BUFCONFIG = 1	1.38	1.4	1.42	V
		BUFCONFIG = 0	2.46	2.5	2.54	

7.14.2 Electrical Characteristics (VREF1)

over recommended ranges of supply voltage and operating free-air temperature (unless otherwise noted)

PARAMETER		TEST CONDITIONS	MIN	TYP	MAX	UNIT
I_{VREF}	VREF operating supply current	BUFCONFIG = {0, 1}, No load		189	330	µA
I_{Drive}	VREF output drive strength [1]	Drive strength supported on VREF+ device pin			100	µA
I_{SC}	VREF short circuit current				100	mA
TC_{VREF}	Temperature coefficient of VREF (Bandgap+VRBUF) [2]	BUFCONFIG = {1}			80	ppm/°C
TC_{VREF}	Temperature coefficient of VREF (Bandgap+VRBUF) [2]	BUFCONFIG = {0}			80	ppm/°C
TC_{drift}	Long term VREF drift	Time = 1000 hours, BUFCONFIG = {0, 1}, T = 25°C			300	ppm
$PSRR_{DC}$	VREF Power supply rejection ratio, DC	VDD = 1.7 V to VDDmax, BUFCONFIG = 1	60	70		dB
		VDD = 2.7 V to VDDmax, BUFCONFIG = 0	50	60		
V_{noise}	RMS noise at VREF output (0.1 Hz to 100 MHz)	BUFCONFIG = 1		350		µVrms
		BUFCONFIG = 0		500		
C_{VREF}	Recommended VREF decoupling capacitor on VREF+ pin [3] [4] [5]		0.7	1	1.15	µF
$T_{startup}$	VREF startup time	BUFCONFIG = {0, 1} , VDD ≥ 2.7 V, C_{VREF} = 1µF			200	µS
$T_{refresh}$	VREF External capacitor refresh time		31.25			

(1) The specified MAX output drive strength is supported regardless of which peripherals are being used in the device.
(2) The temperature coefficient of the VREF output is the sum of TC_{VRBUF} and the temperature coefficient of the internal bandgap reference.
(3) Decoupling capacitor (C_{VREF}) is required when using the internal voltage reference VREF and should be connected from the VREF+ pin to VREF-/GND. When using the VREF+/- pins to supply an external reference, a decoupling capacitor value should be selected based on the external reference source.
(4) A ceramic capacitor with package size of 0805 or smaller is preferred. Up to ±20% tolerance is acceptable

Copyright © 2025 Texas Instruments Incorporated

(5) The VREF module should only be enabled when C_{VREF} is connected and should not be enabled otherwise.

7.15 VREF2

7.15.1 Voltage Characteristics (VREF2)

over recommended ranges of supply voltage and operating free-air temperature (unless otherwise noted)

PARAMETER		TEST CONDITIONS	MIN	TYP	MAX	UNIT
VDD_{min}	Minimum supply voltage needed for VREF operation	BUFCONFIG = 1	1.62			V
		BUFCONFIG = 0	2.7			
VREF	Voltage reference output voltage	BUFCONFIG = 1	1.38	1.4	1.42	V
		BUFCONFIG = 0	2.46	2.5	2.54	

7.15.2 Electrical Characteristics (VREF2)

over recommended ranges of supply voltage and operating free-air temperature (unless otherwise noted)

PARAMETER		TEST CONDITIONS	MIN	TYP	MAX	UNIT
I_{VREF}	VREF operating supply current	BUFCONFIG = {0, 1}, No load		130	200	µA
TC_{VREF}	Temperature coefficient of VREF (Bandgap+VRBUF) (1)	BUFCONFIG = {0,1}			80	ppm/°C
TC_{drift}	Long term VREF drift	Time = 1000 hours, BUFCONFIG = {0, 1}, T = 25°C			300	ppm
$PSRR_{DC}$	VREF Power supply rejection ratio, DC	VDD = 1.7 V to VDDmax, BUFCONFIG = 1	60	70		dB
		VDD = 2.7 V to VDDmax, BUFCONFIG = 0	50	60		
V_{noise}	RMS noise at VREF output (0.1 Hz to 100 MHz)	BUFCONFIG = 1		350		µVrms
		BUFCONFIG = 0		500		
$T_{startup}$	VREF startup time	BUFCONFIG = {0, 1} , VDD ≥ 2.7 V			20	us

(1) The temperature coefficient of the VREF output is the sum of TC_{VRBUF} and the temperature coefficient of the internal bandgap reference.

7.16 Comparator (COMP)

7.16.1 Comparator Electrical Characteristics

over recommended ranges of supply voltage and operating free-air temperature (unless otherwise noted)

PARAMETER		TEST CONDITIONS	MIN	TYP	MAX	UNIT
Comparator Electrical Characteristics						
V_{CM}	Common mode input range		0		VDD	V
V_{offset}	Input offset voltage		-20		20	mV
V_{hys}	DC input hysteresis	HYST=00h		0.4		mV
		HYST=01h		10		
		HYST=02h		20		
		HYST=03h		30		
t_{PD_ls}	Propagation delay, response time	Output Filter off, Overdrive = 100 mV, High Speed Mode		32	50	ns
		Output Filter off, Overdrive = 100 mV, Low Power Mode		1.2	4	µs
t_{en}	Comparator enable time	Startup time to reach propagation delay specification, High Speed Mode (comparator only)			5	µs
		Startup time to reach propagation delay specification, Low Power Mode (comparator only)			10	µs

Copyright © 2025 Texas Instruments Incorporated

over recommended ranges of supply voltage and operating free-air temperature (unless otherwise noted)

PARAMETER		TEST CONDITIONS	MIN	TYP	MAX	UNIT
I_{comp}	Comparator current consumption.	Vcm = VDD/2, 100mV overdrive, DAC output as a voltage reference, VDD is reference for DAC, High Speed Mode		130	200	µA
		Vcm = VDD/2, 100mV overdrive, DAC output as a voltage reference, VDD is reference for DAC, Low Power Mode		0.85	2.7	µA
		Vcm = VDD/2, 100mV overdrive, comparator only. High Speed Mode		120	180	µA
		Vcm = VDD/2, 100mV overdrive, comparator only, Low Power Mode		0.7	2.1	µA
I_{comp}	Comparator +VREF current consumption in low power	Vcm = VDD/2, 100mV overdrive, DAC output as a voltage reference, Internal VREF is reference for DAC, Low Power Mode. VREF registers SHCYCLE=0xC0, HCYCLE=0xC0, SHMODE=1		3		uA
8-bit DAC Electrical Characteristics						
V_{dac}	DAC output range		0		VDD	V
$V_{dac\text{-}code}$	8-bit DAC output voltage for a given code	VIN = reference voltage into 8-bit DAC, code n = 0 to 255		VIN × (n+1) / 256		V
INL	Integral nonlinearity of 8-bit DAC		-1		1	LSB
DNL	Differential nonlinearity of 8-bit DAC		-1		1	LSB
Gain error	Gain error of 8-bit DAC	Reference voltage = VDD	-2		2	% of FSR
Offset error	Offset error of 8-bit DAC		-5		5	mV
Output Impedance	8-bit DAC output impedance			50		kΩ
t_{dac_settle}	8-bit DAC settling time in static mode	DACCODE0 = 0 → 255, DAC output accurate to 1 LSB, DAC out-put on pin PA11, Cload = 15pF		6		µs
		DACCODE0 = 0 → 255, DAC output accurate to 1 LSB		1.5		µs

7.17 I2C

7.17.1 I2C Characteristics

over operating free-air temperature range (unless otherwise noted)

PARAMETERS		TEST CONDITIONS	Standard mode		Fast mode		Fast mode plus		UNIT
			MIN	MAX	MIN	MAX	MIN	MAX	
f_{I2C}	I2C input clock frequency		2	32	8	32	20	32	MHz
f_{SCL}	SCL clock frequency		0.025	0.1		0.4		1	MHz
$t_{HD,STA}$	Hold time (repeated) START		4		0.6		0.26		us
t_{LOW}	Low period of the SCL clock		4.7		1.3		0.5		us
t_{HIGH}	High period of the SCL clock		4		0.6		0.26		us
$t_{SU,STA}$	Setup time for a repeated START		4.7		0.6		0.26		us
$t_{HD,DAT}$	Data hold time		0		0		0		ns
$t_{SU,DAT}$	Data setup time		250		100		50		ns
$t_{SU,STO}$	Setup time for STOP		4		0.6		0.26		us
t_{BUF}	bus free time between a STOP and START condition		4.7		1.3		0.5		us
$t_{VD;DAT}$	data valid time			3.45		0.9		0.45	us
$t_{VD;ACK}$	data valid acknowledge time			3.45		0.9		0.45	us

7.17.2 I2C Filter

over operating free-air temperature range (unless otherwise noted)

PARAMETERS		TEST CONDITIONS	MIN	TYP	MAX	UNIT
f_{SP}	Pulse duration of spikes suppressed by input filter	AGFSELx = 0		6		ns
		AGFSELx = 1		14	35	
		AGFSELx = 2		22	60	
		AGFSELx = 3		35	90	

7.17.3 I²C Timing Diagram

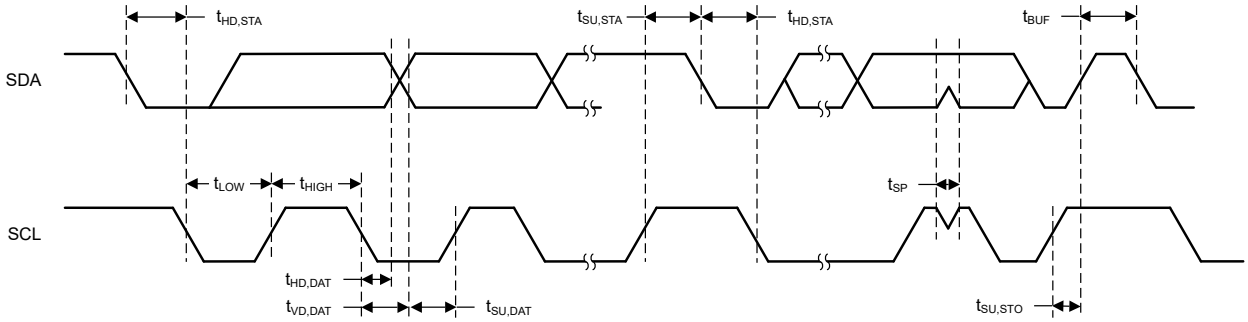

Figure 7-3. I2C Timing Diagram

7.18 SPI

7.18.1 SPI

over operating free-air temperature range (unless otherwise noted)

PARAMETERS		TEST CONDITIONS	MIN	TYP	MAX	UNIT
SPI						
f_{SPI}	SPI clock frequency	Clock max speed >= 32MHz 1.62 < VDD < 3.6V Peripheral or Controller mode			16[4]	MHz
		Clock max speed >= 48MHz 1.62 < VDD < 2.7V Peripheral or Controller mode with High speed IO			24[4]	
		Clock max speed >= 64MHz 2.7 < VDD < 3.6V Peripheral or Controller mode with High speed IO			32[4]	
DC_{SCK}	SCK Duty Cycle		40	50	60	%
Controller						
$t_{SCLK_H/L}$	SCLK High or Low time		(tSPI/2) - 1	tSPI / 2	(tSPI/2) + 1	ns
$t_{CS.LEAD}$	CS lead-time, CS active to clock	SPH=0	1 SPI Clock			ns
		SPH=1	1/2 SPI Clock			
$t_{CS.LAG}$	CS lag time, Last clock to CS inactive	SPH=0	1/2 SPI Clock			ns
		SPH=1	1 SPI Clock			
$t_{CS.ACC}$	CS access time, CS active to PICO data out				1/2 SPI Clock	ns

Copyright © 2025 Texas Instruments Incorporated

over operating free-air temperature range (unless otherwise noted)

PARAMETERS		TEST CONDITIONS	MIN	TYP	MAX	UNIT
$t_{CS.DIS}$	CS disable time, CS inactive to PICO high inpedance				1 SPI Clock	ns
$t_{SU.CI}$	POCI input data setup time (1)	2.7 < VDD < 3.6V, delayed sampling enabled	6			ns
		1.62 < VDD < 2.7V, delayed sampling enabled	9			
		2.7 < VDD < 3.6V, no delayed sampling	28			
		1.62 < VDD < 2.7V, no delayed sampling	35			
$t_{HD.CI}$	POCI input data hold time	delayed sampling enabled	24			ns
		no delayed sampling	0			
$t_{VALID.CO}$	PICO output data valid time (2)				7	ns
$t_{HD.CO}$	PICO output data hold time (3)		0			ns
Peripheral						
$t_{CS.LEAD}$	CS lead-time, CS active to clock		10.5			ns
$t_{CS.LAG}$	CS lag time, Last clock to CS inactive		1			ns
$t_{CS.ACC}$	CS access time, CS active to POCI data out				45	ns
$t_{CS.DIS}$	CS disable time, CS inactive to POCI high inpedance				45	ns
$t_{SU.PI}$	PICO input data setup time		7.5			ns
$t_{HD.PI}$	PICO input data hold time		2			ns
$t_{VALID.PO}$	POCI output data valid time(2)	2.7 < VDD < 3.6V			25	ns
		1.62 < VDD < 2.7V			29	
$t_{HD.PO}$	POCI output data hold time(3)		5.5			ns

(1) The POCI input data setup time can be fully compensated when delayed sampling feature is enabled.
(2) Specifies the time to drive the next valid data to the output after the output changing SCLK clock edge
(3) Specifies how long data on the output is valid after the output changing SCLK clock edge
(4) fSPIclk = 1/2tLO/HI with tLO/HI = max(tVALID,CO + tSU,PI, tSU,CI + tVALID,PO).

7.18.2 SPI Timing Diagram

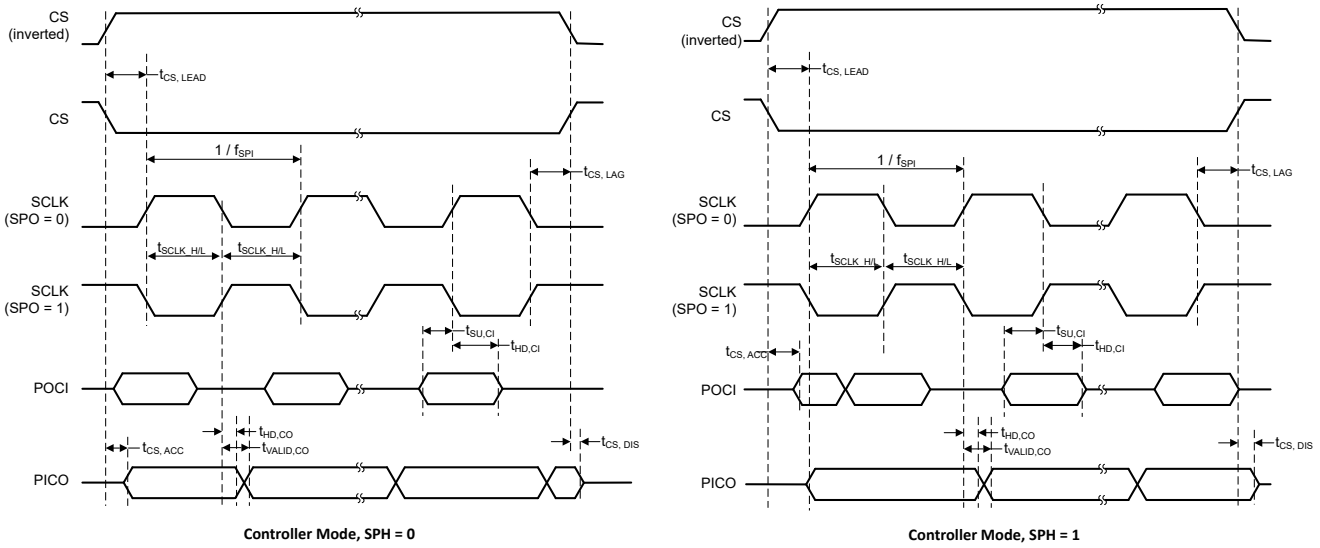

Figure 7-4. SPI timing diagram - Controller Mode

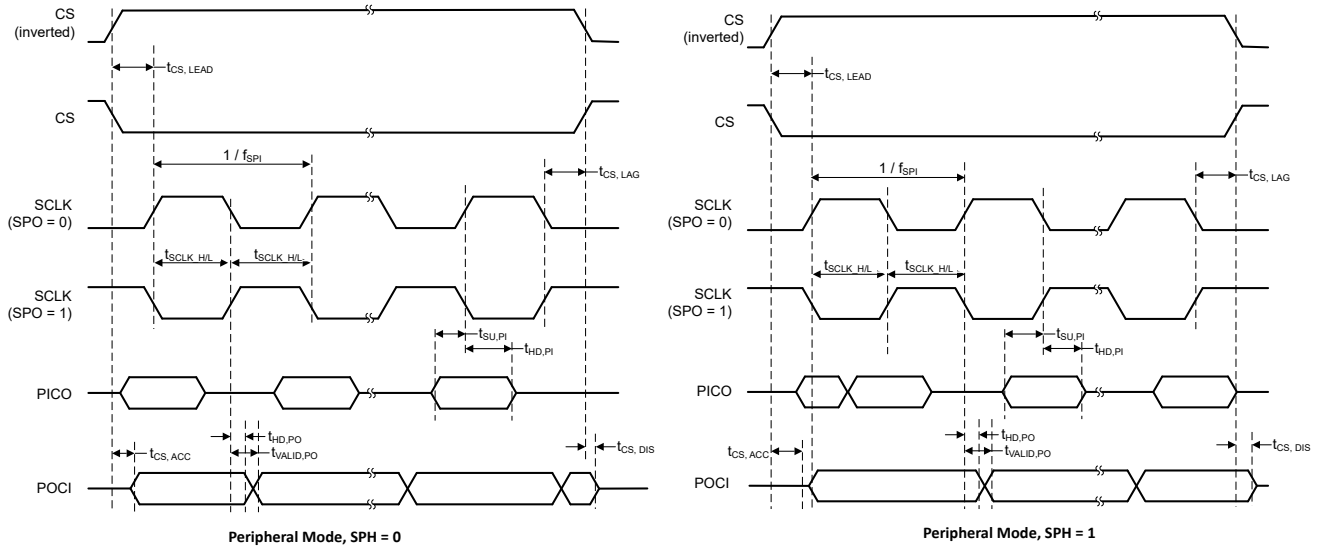

Figure 7-5. SPI timing diagram - Peripheral Mode

7.19 UART

over operating free-air temperature range (unless otherwise noted)

PARAMETERS		TEST CONDITIONS	MIN	TYP	MAX	UNIT
f_{UART}	UART input clock frequency	UART in Power Domain1			80	MHz
		UART in Power Domain0			40	
f_{BITCLK}	BITCLK clock frequency(equals baud rate in MBaud)	UART in Power Domain1			10	MHz
		UART in Power Domain0			5	

7.20 USB Specifications

7.20.1 USB Characteristics (USB mode)

over recommended ranges of supply voltage and operating free-air temperature (unless otherwise noted)

PARAMETER		TEST CONDITIONS		MIN	TYP	MAX	UNIT
I_{VUSB33}	VUSB33 pin quiescent current	VUSB33	USB mode (3V ≤ VUSB33 ≤ 3.6V), USB bus IDLE		445		uA
		VUSB33	USB mode (3V ≤ VUSB33 ≤ 3.6V), USB SUSPEND mode		180		uA
		VUSB33	GPIO mode (1.62V ≤ VUSB33 ≤ 3.6V)		10		nA
V_{CM}	Differential input common mode range	USBIO (1)	USB mode (3V ≤ VUSB33 ≤ 3.6V)	0.8		2.5	V
V_{DI}	Differential input voltage	USBIO (1)	USB mode (3V ≤ VUSB33 ≤ 3.6V)	0.2			V
V_{IH}	Static SE input logic-high level	USBIO (1)	USB mode (3V ≤ VUSB33 ≤ 3.6V)	0.7*VUSB33			V
V_{IL}	Static SE input logic-low level	USBIO (1)	USB mode (3V ≤ VUSB33 ≤ 3.6V)			0.3*VUSB33	V
V_{HYS}	Static SE input logic-low level	USBIO (1)	USB mode (3V ≤ VUSB33 ≤ 3.6V)	10	50	300	mV
Z_{IN}	Input impedance	USBIO (1)	USB mode (3V ≤ VUSB33 ≤ 3.6V)	300			kΩ
Z_{DRV}	D+, D– impedance	USBIO (1)	USB mode (3V ≤ VUSB33 ≤ 3.6V)	28		44	Ω
R_{PU}	Pull up resistance	USBIO (1)	USB mode (3V ≤ VUSB33 ≤ 3.6V), IDLE bus		1.1		kΩ
R_{PD}	Pull down resistance	USBIO (1)	USB mode (3V ≤ VUSB33 ≤ 3.6V)		18		kΩ

Copyright © 2025 Texas Instruments Incorporated

over recommended ranges of supply voltage and operating free-air temperature (unless otherwise noted)

PARAMETER		TEST CONDITIONS		MIN	TYP	MAX	UNIT
V_{OH}	D+, D–	USBIO (1)	USB mode (3V ≤ VUSB33 ≤ 3.6V) $\lvert I_{IO}\rvert_{,max}$=2.5mA	2.8		3.6	V
V_{OL}	D+, D–	USBIO (1)	USB mode (3V ≤ VUSB33 ≤ 3.6V) $\lvert I_{IO}\rvert_{,max}$=2.5mA	0		0.3	V
V_{CRS}	Output Signal Crossover Voltage	USBIO (1)	USB mode (3V ≤ VUSB33 ≤ 3.6V) Rpd on D+/D-/Pu on D- only	1.3		2.0	V
t_r	Rise time	USBIO (1)	USB mode (3V ≤ VUSB33 ≤ 3.6V) Full speed, differential, C_L = 50 pF, 10%/90%, Rpu on D+	4		20	ns
t_f	Fall time	USBIO (1)	USB mode (3V ≤ VUSB33 ≤ 3.6V) Full speed, differential, C_L = 50 pF, 10%/90%, Rpu on D+	4		20	ns
t_{rfm}	Rise & Fall Time Matching	USBIO (1)	USB mode (3V ≤ VUSB33 ≤ 3.6V) Full speed, differential, C_L = 50 pF, 10%/90%, Rpu on D+	90		111	%

(1) I/O Types: ODIO = 5V Tolerant Open-Drain , SDIO = Standard-Drive , HSIO = High-Speed, HDIO = High-Drive, USBIO = USB protocol

7.21 Serial Audio

over operating free-air temperature range (unless otherwise noted)

PARAMETERS		TEST CONDITIONS	MIN	TYP	MAX	UNIT
Controller Mode						
f_{BCLK}	Serial Audio bit clock frequency	Transmitter mode			6.144	MHz
		Receiver mode			12.288	MHz
$t_{VALID.WCLK}$	Word Clock output valid time				16	ns
$t_{HOLD:WCLK}$	Word Clock output hold time		7			ns
$t_{VALID:ADx}$	Data output valid time	Transmitter mode			56	ns
$t_{HOLD:ADx}$	Data output hold time	Transmitter mode	11			ns
$t_{SU.ADx}$	Data input setup time	Receiver mode	4			ns
$t_{HOLD.ADx}$	Data input hold time	Receiver mode	1			ns
Target Mode						
f_{BCLK}	Serial Audio bit clock frequency	Transmitter mode			12.288	MHz
		Receiver mode			6.144	MHz
$t_{SU.WCLK}$	Word Clock input setup time		15			ns
$t_{HOLD:WCLK}$	Word Clock input hold time		1			ns
$t_{VALID:ADx}$	Data output valid time	Transmitter mode			37	ns
$t_{HOLD:ADx}$	Data output hold time	Transmitter mode	8			ns
$t_{SU.ADx}$	Data input setup time	Receiver mode	3			ns
$t_{HOLD.ADx}$	Data input hold time	Receiver mode	1			ns

Copyright © 2025 Texas Instruments Incorporated

7.22 TIMx

over operating free-air temperature range (unless otherwise noted)

PARAMETERS		TEST CONDITIONS	MIN	TYP	MAX	UNIT
t_{res}	Timer resolution time	TIMx in Power Domain 1, $f_{TIMxCLK}$ = 80MHz	12.5			ns
		TIMx in Power Domain 0, $f_{TIMxCLK}$ = 40MHz	25			ns
			1			$t_{TIMxCLK}$

7.23 Emulation and Debug

7.23.1 SWD Timing

over operating free-air temperature range (unless otherwise noted)

PARAMETER		TEST CONDITIONS	MIN	TYP	MAX	UNIT
f_{SWD}	SWD frequency				10	MHz

Copyright © 2025 Texas Instruments Incorporated

8 Detailed Description

The following sections describe all of the components that make up the devices in this data sheet. The peripherals integrated into these devices are configured by software through Memory Mapped Registers (MMRs). For more details, see the corresponding chapter of the *MSPM0 G-Series 80-MHz Microcontrollers Technical Reference Manual*.

8.1 Functional Block Diagram

Figure 8-1 shows the MSPM0G511x functional block diagram.

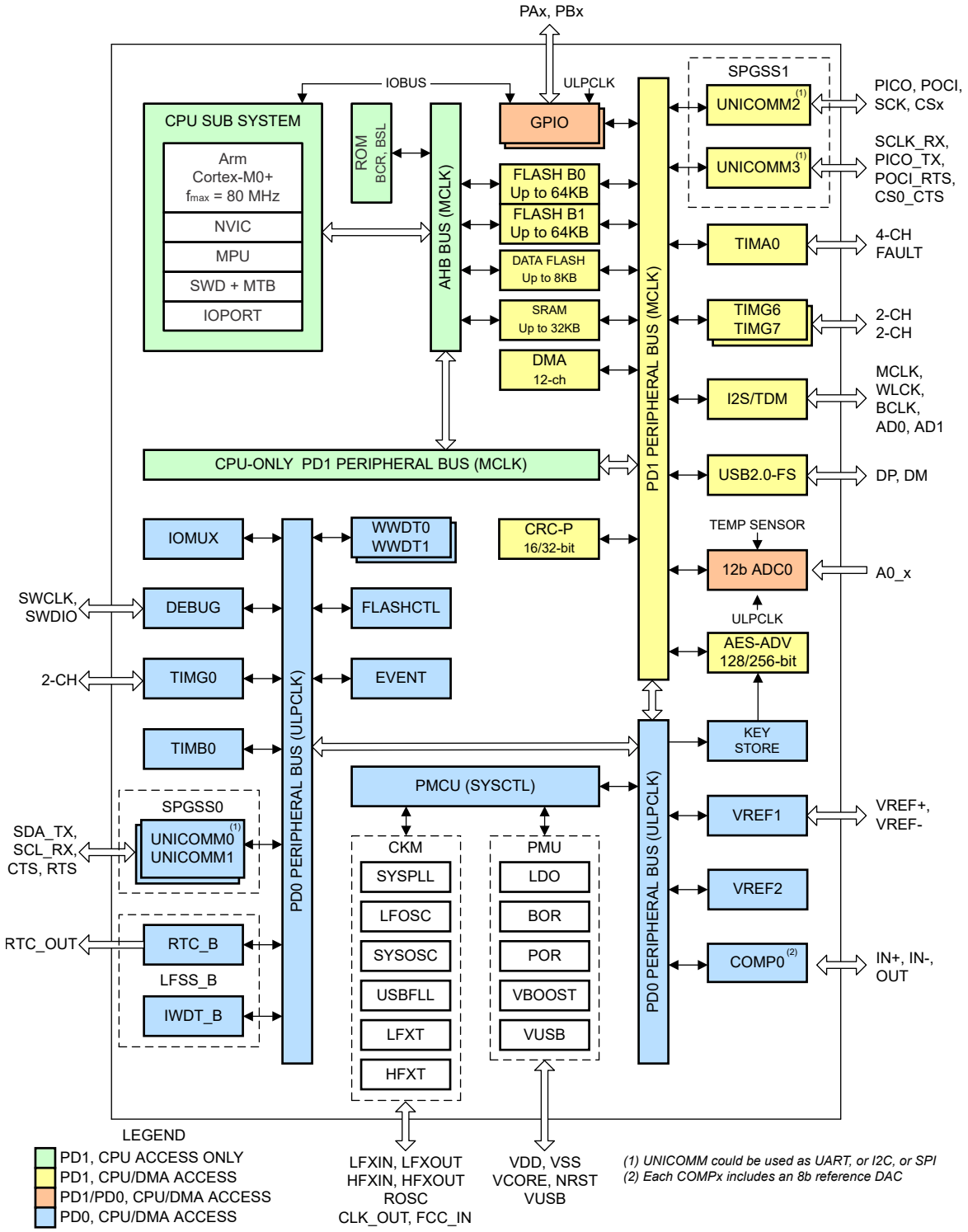

Figure 8-1. MSPM0G511x Functional Block Diagram

8.2 CPU

The CPU sub system (MCPUSS) implements an ARM Cortex-M0+ CPU, an instruction pre-fetch/cache, a system timer, a memory protection unit, and interrupt management features. The ARM Cortex-M0+ is a cost-

Copyright © 2025 Texas Instruments Incorporated

optimized, 32-bit CPU which delivers high performance and low power to embedded applications. Key features of the CPU Sub System include:

- ARM Cortex-M0+ CPU supporting clock frequencies from 32kHz to 80MHz
  - ARMv6-M Thumb instruction set (little endian) with single-cycle 32x32 multiply instruction
  - Single-cycle access to GPIO registers via ARM single-cycle IO port
- Pre-fetch logic to improve sequential code execution, and I-cache with 4 64-bit cache lines
- System timer (SysTick) with 24-bit down counter and automatic reload
- Memory protection unit (MPU) with 8 programmable regions
- Nested vectored interrupt controller (NVIC) with 4 programmable priority levels and tail-chaining
- Interrupt groups for expanding the total interrupt sources, with jump index for low interrupt latency

8.3 Operating Modes

MSPM0G MCUs provide five main operating modes (power modes) to allow for optimization of the device power consumption based on application requirements. In order of decreasing power, the modes are: RUN, SLEEP, STOP, STANDBY, and SHUTDOWN. The CPU is active executing code in RUN mode. Peripheral interrupt events can wake the device from SLEEP, STOP, or STANDBY mode to the RUN mode. SHUTDOWN mode completely disables the internal core regulator to minimize power consumption, and wake is only possible via NRST, SWD, or a logic level match on certain IOs. RUN, SLEEP, STOP, and STANDBY modes also include several configurable policy options (e.g. RUN.x) for balancing performance with power consumption.

To further balance performance and power consumption, MSPM0G devices implement two power domains: PD1 (for the CPU, memories, and high performance peripherals), and PD0 (for low speed, low power peripherals). PD1 is always powered in RUN and SLEEP modes, but is disabled in all other modes. PD0 is always powered in RUN, SLEEP, STOP, and STANDBY modes. PD1 and PD0 are both disabled in SHUTDOWN mode.

8.3.1 Functionality by Operating Mode (MSPM0G511x)

Supported functionality in each operating mode is given in Table 8-1.

Functional key:

- **EN**: The function is enabled in the specified mode.
- **DIS**: The function is disabled (either clock or power gated) in the specified mode, but the function's configuration is retained.
- **OPT**: The function is optional in the specified mode, and remains enabled if configured to be enabled.
- **NS**: The function is not automatically disabled in the specified mode, but it is not supported.
- **OFF**: The function is fully powered off in the specified mode, and no configuration information is retained. When waking up from an OFF state, all module registers must be re-configured to the desired settings by application software.

Table 8-1. Supported Functionality by Operating Mode

OPERATING MODE		RUN			SLEEP			STOP			STANDBY		SHUTDOWN
		RUN0	RUN1	RUN2	SLEEP0	SLEEP1	SLEEP2	STOP0	STOP1	STOP2	STANDBY0	STANDBY1	
Oscillators	SYSOSC	EN		DIS	EN		DIS	OPT[1]	EN	DIS	DIS		OFF
	LFOSC or LFXT	EN (LFOSC or LFXT)											OFF
	HFXT	OPT	DIS		OPT	DIS		DIS			DIS		OFF
	SYSPLL	OPT	DIS		OPT	DIS		DIS[4]			DIS[4]		OFF
	USBFLL	OPT	DIS		OPT	DIS		DIS			DIS		OFF

Table 8-1. Supported Functionality by Operating Mode (continued)

OPERATING MODE		RUN			SLEEP			STOP			STANDBY		SHUTDOWN
		RUN0	RUN1	RUN2	SLEEP0	SLEEP1	SLEEP2	STOP0	STOP1	STOP2	STANDBY0	STANDBY1	
Clocks	CPUCLK	80 MHz	32 kHz		DIS								OFF
	MCLK to PD1	80 MHz	32 kHz		80 MHz	32 kHz		DIS					OFF
	ULPCLK to PD0	40 MHz	32 kHz		40 MHz	32 kHz		4 MHz (1)	4 MHz	32 kHz	32 kHz	DIS	OFF
	ULPCLK to TIMG0, TIMB0	40 MHz	32 kHz		40 MHz	32 kHz		4 MHz (1)	4 MHz	32 kHz	32 kHz	32 kHz (2)	OFF
	RTCCLK	32 kHz											OFF
	USBCLK	OPT	DIS		OPT	DIS		DIS			DIS		OFF
	MFCLK	OPT	DIS		OPT	DIS		OPT		DIS	DIS		OFF
	LFCLK to PD0/1	32 kHz										DIS	OFF
	LFCLK to TIMG0, TIMB0	32 kHz										32 kHz (2)	OFF
	LFCLK Monitor	OPT											OFF
	MCLK Monitor	OPT										DIS	OFF
PMU	POR monitor	EN											
	BOR monitor	EN											OFF
	Core regulator	FULL DRIVE						REDUCED DRIVE			LOW DRIVE		OFF
Core Functions	CPU	EN			DIS								OFF
	DMA	OPT						DIS (triggers supported)					OFF
	Flash	EN						DIS					OFF
	SRAM	EN						DIS					OFF
PD1 Peripherals	UC2/3	OPT						OFF					OFF
	USB2.0-FS	OPT	DIS		OPT	DIS		OFF					OFF
	I2S/TDM	OPT	DIS		OPT	DIS		OFF					OFF
	TIMA0	OPT						OFF					OFF
	TIMG6/7	OPT						OFF					OFF
	AESADV	OPT						OFF					OFF
	CRC-P	OPT						DIS					OFF
PD0 Peripherals	GPIOA/B(3)	OPT										OPT(2)	OFF
	UC0/1	OPT										OPT(2)	OFF
	TIMG0	OPT										OPT(2)	OFF
	TIMB0	OPT										OPT(2)	OFF
	WWDT0/1	OPT										DIS	OFF
	IWDT	OPT											OFF
	RTC_B	OPT											OFF
	Keystore	OPT											OFF
Analog	VREF1	OPT											OFF
	VREF2	OPT								NS			OFF
	ADC0(3)	OPT								NS (triggers supported)			OFF
	COMP0	OPT	OPT (ULP)		OPT	OPT (ULP)		OPT		OPT (ULP)			OFF
	Temperature Sensor	OPT									OFF		OFF

Copyright © 2025 Texas Instruments Incorporated

Table 8-1. Supported Functionality by Operating Mode (continued)

OPERATING MODE	RUN			SLEEP			STOP			STANDBY		SHUTDOWN
	RUN0	RUN1	RUN2	SLEEP0	SLEEP1	SLEEP2	STOP0	STOP1	STOP2	STANDBY0	STANDBY1	
IOMUX and IO Wakeup	EN											DIS w/ WAKE
Wake Sources	N/A			ANY IRQ			PD0 IRQ					IOMUX, NRST, SWD

(1) If STOP0 is entered from RUN1 (SYSOSC enabled but MCLK sourced from LFCLK), SYSOSC remains enabled as it was in RUN1, and ULPCLK remains at 32 kHz as it was in RUN1. If STOP0 is entered from RUN2 (SYSOSC was disabled and MCLK was sourced from LFCLK), SYSOSC remains disabled as it was in RUN2, and ULPCLK remains at 32 kHz as it was in RUN2.
(2) When using the STANDBY1 policy for STANDBY, only specific peripherals (TIMG0, TIMB0, and RTC) are clocked. Other PD0 peripherals can generate an asynchronous fast clock request upon external activity but are not actively clocked.
(3) For ADCx and GPIO Ports A and B, the digital logic is in PD0 and the register interface is in PD1. These peripherals support fast single-cycle register access when PD1 is active and also support basic operation down to STANDBY mode where PD0 is still active.
(4) SYSPLL is not automatically disabled, and needs to be manually disabled through the HSCLKEN.SYSPLLEN field within the SYSCTL registers in order to reduce power consumption.

8.4 Power Management Unit (PMU)

The power management unit (PMU) generates the internally regulated core supplies for the device and provides supervision of the external supply (VDD). The PMU also contains the bandgap voltage reference used by the PMU itself as well as analog peripherals. Key features of the PMU include:

- Power-on reset (POR) supply monitor
- Brown-out reset (BOR) supply monitor with early warning capability using three programmable thresholds
- Core regulator with support for RUN, SLEEP, STOP, and STANDBY operating modes to dynamically balance performance with power consumption
- Parity-protected trim to immediately generate a power-on reset (POR) in the event that a power management trim is corrupted

For more details, see the PMU chapter of the *MSPM0 G-Series 80-MHz Microcontrollers Technical Reference Manual*.

8.5 Clock Module (CKM)

The clock module provides the following oscillators:

- **LFOSC**: Internal low-frequency oscillator (32KHz)
- **SYSOSC**: Internal high-frequency oscillator (4MHz or 32MHz with factory trim, 16MHz or 24MHz with user trim)
- **LFXT/LFCKIN** : Low-frequency external crystal oscillator or digital clock input (32KHz)
- **HFXT/HFCKIN**: High-frequency external crystal oscillator or digital clock input (4 to 48MHz)
- **SYSPLL**: System phase locked loop with 3 outputs (32 to 80MHz)
- **USBFLL**: Internal frequency-locked-loop (FLL) oscillator (60MHz)

The following clocks are distributed by the clock module for use by the processor, bus, and peripherals:

- **MCLK**: Main system clock for PD1 peripherals, derived from SYSOSC, LFCLK, or HSCLK, active in RUN and SLEEP modes
- **CPUCLK**: Clock for the processor (derived from MCLK), active in RUN mode
- **ULPCLK**: Ultra-low power clock for PD0 peripherals, active in RUN, SLEEP, STOP, and STANDBY modes
- **MFCLK**: 4MHz fixed mid-frequency clock for peripherals, available in RUN, SLEEP, and STOP modes
- **LFCLK**: 32kHz fixed low-frequency clock for peripherals or MCLK, active in RUN, SLEEP, STOP, and STANDBY modes
- **ADCCLK**: ADC clock, available in RUN, SLEEP and STOP modes

- **CLK_OUT**: Used to output a clock externally, available in RUN, SLEEP, STOP, and STANDBY modes
- **HFCLK**: High frequency clock derived from HFXT or HFCLK_IN, available in RUN and SLEEP modes
- **HSCLK**: High speed clock derived from HFCLK, SYSPLL, or USBFLL and is available in RUN and SLEEP modes
- **USBCLK**: USB clock, available in RUN and SLEEP modes
- **DAICLK**: Digital audio interface clock, available in RUN mode

For more details, see the CKM chapter of the *MSPM0 G-Series 80-MHz Microcontrollers Technical Reference Manual*.

8.6 DMA

The direct memory access (DMA) controller allows movement of data from one memory address to another without CPU intervention. For example, the DMA can be used to move data from ADC conversion memory to SRAM. The DMA reduces system power consumption by allowing the CPU to remain in low power mode, without having to awaken to move data to or from a peripheral.

The DMA in these devices support the following key features:

- 12 independent DMA transfer channels
  - 6 full-feature channel (DMA0-DMA5), supporting repeated transfer modes
  - 6 basic channels (DMA6-DMA11) supporting single transfer modes
- Configurable DMA channel priorities
- Byte (8-bit), short word (16-bit), word (32-bit) and long word (64-bit) and long-long word (128-bit) or mixed byte and word transfer capability
- Transfer counter block size supports up to 64k transfers of any data type
- Configurable DMA transfer trigger selection
- Active channel interruption to service other channels
- Early interrupt generation for ping-pong buffer architecture
- Cascading channels upon completion of activity on another channel
- Stride mode to support data re-organization, such as 3-phase metering applications
- Gather mode

Table 8-2. DMA Features

Feature	FULL	BASIC
Channel#	0,1,2,3,4,5	6,7,8,9,10,11
Repeat Mode	Yes	-
Table & Fill Mode	Yes	-
Gather Mode	Yes	-
Pre-IRQ	Yes	-
Auto Enable	Yes	Yes
Long Long (128-bit) Transfer	Yes	Yes
Stride Mode	Yes	Yes
Cascading Channel Support	Yes	Yes

Table 8-3 lists the available triggers for the DMA which are configured using the DMATCTL.DMATSEL control bits in the DMA memory mapped registers.

Table 8-3. DMA Trigger Mapping

DMACTL.DMATSEL	Trigger Source	DMACTL.DMATSEL	Trigger Source
0	Software	12	UC3.TX Publisher 2
1	Generic Subscriber (FSUB_0)	13	I2S Publisher 1
2	Generic Subscriber (FSUB_1)	14	I2S Publisher 2
3	AESADV Publisher 1	15	USB-FS Publisher 1
4	AESADV Publisher 2	16	USB-FS Publisher 2

Copyright © 2025 Texas Instruments Incorporated

Table 8-3. DMA Trigger Mapping (continued)

DMACTL.DMATSEL	Trigger Source	DMACTL.DMATSEL	Trigger Source
5	UC0.RX Publisher 1	17	USB-FS Publisher 3
6	UC0.TX Publisher 2	18	USB-FS Publisher 4
7	UC1.RX Publisher 1	19	USB-FS Publisher 5
8	UC1.TX Publisher 2	20	USB-FS Publisher 6
9	UC2.RX Publisher 1	21	USB-FS Publisher 7
10	UC2.TX Publisher 2	22	USB-FS Publisher 8
11	UC3.RX Publisher 1	23	ADC0 DMA Trigger

For more details, see the DMA chapter of the *MSPM0 G-Series 80-MHz Microcontrollers Technical Reference Manual*.

8.7 Events

The event manager transfers digital events from one entity (for example, a peripheral) to another (for example, a second peripheral, the DMA, or the CPU). The event manager implements event transfer through a defined set of event publishers (generators) and subscribers (receivers) which are interconnected through an event fabric containing a combination of static and programmable routes.

Events which are transferred by the event manager include:

- Peripheral event transferred to the CPU as an interrupt request (IRQ) (Static Event)
  - Example: RTC interrupt is sent to the CPU
- Peripheral event transferred to the DMA as a DMA trigger (DMA Event)
  - Example: UART data receive trigger to DMA to request a DMA transfer
- Peripheral event transferred to another peripheral to directly trigger an action in hardware (Generic Event)
  - Example: TIMx timer peripheral publishes a periodic event to the ADC subscriber port, and the ADC uses the event to trigger start-of-sampling

Refer to Event chapter of the *MSPM0 G-Series 80-MHz Microcontrollers Technical Reference Manual* for more information.

Table 8-4. Generic Event Channels

A generic route is either a point-to-point (1:1) route or a point-to-two (1:2) splitter route route in which the peripheral publishing the event is configured to use one of several available generic route channels to publish its event to another entity (or entities, in the case of a splitter route), where an entity may be another peripheral, a generic DMA trigger event, or a generic CPU event.

CHANID	Generic Route Channel Selection	Channel Type
0	No generic event channel selected	N/A
1	Generic event channel 1 selected	1 : 1
2	Generic event channel 2 selected	1 : 1
3	Generic event channel 3 selected	1 : 1
4	Generic event channel 4 selected	1 : 1
5	Generic event channel 5 selected	1 : 1
6	Generic event channel 6 selected	1 : 1
7	Generic event channel 7 selected	1 : 1
8	Generic event channel 8 selected	1 : 1
9	Generic event channel 9 selected	1 : 1
10	Generic event channel 10 selected	1 : 1
11	Generic event channel 11 selected	1 : 1
12	Generic event channel 12 selected	1 : 2 (splitter)
13	Generic event channel 13 selected	1 : 2 (splitter)
14	Generic event channel 14 selected	1 : 2 (splitter)

Copyright © 2025 Texas Instruments Incorporated

Table 8-4. Generic Event Channels (continued)

A generic route is either a point-to-point (1:1) route or a point-to-two (1:2) splitter route route in which the peripheral publishing the event is configured to use one of several available generic route channels to publish its event to another entity (or entities, in the case of a splitter route), where an entity may be another peripheral, a generic DMA trigger event, or a generic CPU event.

CHANID	Generic Route Channel Selection	Channel Type
15	Generic event channel 15 selected	1 : 2 (splitter)

8.8 Memory

8.8.1 Memory Organization

Table 8-5 summarizes the memory map of the devices. For more information about the memory region detail, see the *Platform Memory Map* section in the *MSPM0 G-Series 80-MHz Microcontrollers Technical Reference Manual* .

Table 8-5. Memory Organization

MEMORY REGION	SUBREGION	MSPM0G5115	MSPM0G5116	MSPM0G5117
Code (Flash Bank 0)	MAIN ECC Corrected	16KB	32KB	64KB
		0x0000.0000 to 0x0000.3FFF	0x0000.0000 to 0x0000.7FFF	0x0000.0000 to 0x0000.FFFF
	MAIN ECC Uncorrected	0x0040.0000 to 0x0040.3FFF	0x0040.0000 to 0x0040.7FFF	0x0040.0000 to 0x0040.FFFF
	Flash ECC Code	0x0080.0000 to 0x0080.3FFF	0x0080.0000 to 0x0080.7FFF	0x0080.0000 to 0x0080.FFFF
Code (Flash Bank 1)	MAIN ECC Corrected	16KB	32KB	64KB
		0x0000.4000 to 0x0000.7FFF	0x0000.8000 to 0x0000.FFFF	0x0001.0000 to 0x0001.FFFF
	MAIN ECC Uncorrected	0x0040.4000 to 0x0040.7FFF	0x0040.8000 to 0x0040.FFFF	0x0041.0000 to 0x0001.FFFF
	Flash ECC Code	0x0080.4000 to 0x0080.7FFF	0x0080.8000 to 0x0080.FFFF	0x0081.0000 to 0x0001.FFFF
Data Flash Bank	Data Flash ECC Corrected	8KB	8KB	8KB
		0x41D0.0000 to 0x41D0.1FFF	0x41D0.0000 to 0x41D0.1FFF	0x41D0.0000 to 0x41D0.1FFF
	Data Flash Unchecked	0x41E0.0000 to 0x41E0.1FFF	0x41E0.0000 to 0x41E0.1FFF	0x41E0.0000 to 0x41E0.1FFF
	Data Flash ECC Code	0x41F0.0000 to 0x41F0.1FFF	0x41F0.0000 to 0x41F0.1FFF	0x41F0.0000 to 0x41F0.1FFF
SRAM (SRAM)	SRAM ECC Corrected	16KB	32KB	32KB
		0x2000.0000 to 0x2000.3FFF	0x2000.0000 to 0x2000.7FFF	0x2000.0000 to 0x2000.7FFF
	SRAM Parity Checked	0x2010.0000 to 0x2010.3FFF	0x2010.0000 to 0x2010.7FFF	0x2010.0000 to 0x2010.7FFF
	SRAM Unchecked	0x2020.0000 to 0x2020.3FFF	0x2020.0000 to 0x2020.7FFF	0x2020.0000 to 0x2020.7FFF
	SRAM ECC/Parity Code	0x2030.0000 to 0x2030.3FFF	0x2030.0000 to 0x2030.7FFF	0x2030.0000 to 0x2030.7FFF

Copyright © 2025 Texas Instruments Incorporated

Table 8-5. Memory Organization (continued)

MEMORY REGION	SUBREGION	MSPM0G5115	MSPM0G5116	MSPM0G5117
Peripheral	Peripherals	0x4000.0000 to 0x40FF.FFFF	0x4000.0000 to 0x40FF.FFFF	0x4000.0000 to 0x40FF.FFFF
	NONMAIN Corrected	1KB	1KB	1KB
		0x41C0.0000 to 0x41C0.03FF	0x41C0.0000 to 0x41C0.03FF	0x41C0.0000 to 0x41C0.03FF
	NONMAIN Uncorrected	0x41C1.0000 to 0x41C1.03FF	0x41C1.0000 to 0x41C1.03FF	0x41C1.0000 to 0x41C1.03FF
	NONMAIN ECC Code	0x41C2.0000 to 0x41C2.03FF	0x41C2.0000 to 0x41C2.03FF	0x41C2.0000 to 0x41C2.03FF
	FACTORY Corrected	512Bytes	512Bytes	512Bytes
		0x41C4.0000 to 0x41C4.01FF	0x41C4.0000 to 0x41C4.01FF	0x41C4.0000 to 0x41C4.01FF
	FACTORY Uncorrected	0x41C5.0000 to 0x41C5.01FF	0x41C5.0000 to 0x41C5.01FF	0x41C5.0000 to 0x41C5.01FF
	FACTORY ECC code	0x41C6.0000 to 0x41C6.01FF	0x41C6.0000 to 0x41C6.01FF	0x41C6.0000 to 0x41C6.01FF
Subsystem		0x6000.0000 to 0x7FFF.FFFF	0x6000.0000 to 0x7FFF.FFFF	0x6000.0000 to 0x7FFF.FFFF
System PPB		0xE000.0000 to 0xE00F.FFFF	0xE000.0000 to 0xE00F.FFFF	0xE000.0000 to 0xE00F.FFFF

8.8.2 Peripheral File Map

Table 8-6 lists the available peripherals and the register base address for each.

Table 8-6. Peripherals Summary

Peripheral Name	Base Address	Size
ADC0	0x4000.0000	0x2000
VREF	0x4003.0000	0x2000
WWDT0	0x4008.0000	0x2000
WWDT1	0x4008.2000	0x2000
TIMG0	0x4008.4000	0x2000
RTC_B	0x4009.4000	0x2000
GPIOA	0x400A.0000	0x2000
GPIOB	0x400A.2000	0x2000
KEYSTORE	0x400A.C000	0x2000
SYSCTL	0x400A.F000	0x4000
TIMB0	0x400B.8000	0x2000
DEBUGSS	0x400C.7000	0x2000
EVENT	0x400C.9000	0x3000
NVM	0x400C.D000	0x2000
MCPUSS	0x4040.0000	0x2000
MTB	0x4040.2000	0x1000
MTBRAM	0x4040.3000	0x0020

Copyright © 2025 Texas Instruments Incorporated

Table 8-6. Peripherals Summary (continued)

Peripheral Name	Base Address	Size
IOMUX	0x4042.8000	0x2000
DMA	0x4042.A000	0x2000
CRC	0x4044.0000	0x2000
AESADV	0x4044.2000	0x2000
I2S	0x4047.B000	0x2000
USB FS	0x4047.F000	0x81000
ADC0 (1)	0x4055.6000	0x2000
TIMA0	0x4086.0000	0x2000
TIMG6	0x4086.8000	0x2000
TIMG7	0x4086.A000	0x2000
UNICOMM0	0x40A8.0000	0x2000
UC0.UART	0x40A0.1000	0x1000
UC0.I2CC	0x40A2.1000	0x1000
UC0.I2CT	0x40A4.1000	0x1000
UNICOMM1	0x40A8.2000	0x2000
UC1.UART	0x40A0.3000	0x1000
UC1.I2CC	0x40A2.3000	0x1000
UC1.I2CT	0x40A4.3000	0x1000
SPG0	0x40A0.0000	0x1000
UNICOMM2	0x40B8.0000	0x2000
UC2.SPI	0x40B6.1000	0x1000
UNICOMM3	0x40B8.2000	0x2000
UC3.UART	0x40B0.3000	0x1000
UC3.SPI	0x40B6.3000	0x1000
SPG1	0x40B0.0000	0x1000

(1) Aliased region of ADC0 memory-mapped registers

Copyright © 2025 Texas Instruments Incorporated

8.8.3 Peripheral Interrupt Vector

Table 8-7 shows the IRQ number and the interrupt group number for each periperals in this device.

Table 8-7. Interrupt vector number

Peripheral Name	NVIC IRQ	Group IIDX
WWDT0	0	0
WWDT1	0	1
DEBUGSS	0	2
FLASHCTL	0	3
EVENT SUB PORT 0	0	4
EVENT SUB PORT 1	0	5
SYSCTL	0	6
GPIOA	1	0
GPIOB	1	1
COMP0	1	2
TIMB0	2	-
ADC0	4	-
USBFS	6	-
UC0	9	-
UC1	10	-
I2S	11	-
UC2	13	-
UC3	14	-
TIMG0	16	-
TIMG6	17	-
TIMA0	18	-
TIMG7	20	-
AESADV	28	-
RTC_B	30	-
DMA0	31	-

8.9 Flash Memory

A dual bank of non-volatile flash memory (up to 128kB total) and a separate data flash bank (8kB) is provided for storing executable program code and application data.

Key features of the flash include:

- Hardware ECC protection (encode and decode) with single bit error correction and double-bit error detection
- In-circuit program and erase operations supported across the entire recommended supply range
- Small 1kB sector sizes (minimum erase resolution of 1kB)
- Up to 100,000 program/erase cycles on the 32kB of the flash memory (any sector including data flash bank), with up to 10,000 program/erase cycles on the remaining flash memory (devices with 32kB support 100,000 cycles on the entire flash memory)
- Bank address swap for in-system, over-the-air (OTA) firmware updates

For a complete description of the flash memory, see the NVM chapter of the *MSPM0 G-Series 80-MHz Microcontrollers Technical Reference Manual*.

8.10 SRAM

MSPM0 MCUs include a low power, high performance SRAM memory with zero wait state access across the supported CPU frequency range of the device. MSPM0G511x series provides up to 32KB SRAM with hardware

ECC and parity protection. SRAM memory may be used for storing volatile information such as the call stack, heap, global data, and code. The SRAM memory content is fully retained in run, sleep, stop, and standby operating modes. SRAM contents are lost in shutdown mode.

A write-execute mutual exclusion mechanism is provided to allow the application to partition the SRAM into two sections: a read-write (RW) partition and a read-execute (RX) partition. The SRAMBOUNDARY register in SYSCTL needs to be configured to set up these partitions. The RX partition occupies the upper portion of the SRAM address space. Write protection is useful when placing executable code into SRAM as it provides a level of protection against unintentional overwrites of code by either the CPU or DMA. Placing code in SRAM can improve performance of critical loops by enabling zero wait state operation and lower power consumption. Preventing code execution from the RW partition improves security by preventing self-modifying code execution ability.

8.11 GPIO

The general purpose input/output (GPIO) peripheral provides the user with a means to write data out and read data in to and from the device pins. Through the use of the Port A and Port B GPIO peripherals, MSPM0G511x series support up to 59 GPIO pins.

The key features of the GPIO module include:

- 0 wait state MMR access from CPU
- Set/Clear/Toggle multiple bits without the need of a read-modify-write construct in software
- GPIOs with "Standard with Wake" drive functionality able to wake the device from SHUTDOWN mode
- User controlled input filtering
- GPIO "FastWake" feature enables low-power wakeup from STOP and STANDBY modes for any GPIO port

For more details, see the GPIO chapter of the *MSPM0 G-Series 80-MHz Microcontrollers Technical Reference Manual*.

8.12 IOMUX

The IOMUX peripheral enables IO pad configuration and controls digital data flow to and from the device pins. The key features of the IOMUX include:

- IO Pad configuration registers allow for programmable drive strength, speed, pullup-down, and more
- Digital pin muxing allows for multiple peripheral signals to be routed to the same IO pad
- Pin functions and capabilities are user-configured using the PINCM register

For more details, see the IOMUX chapter of the *MSPM0 G-Series 80-MHz Microcontrollers Technical Reference Manual*.

8.13 ADC

The 12-bit analog-to-digital converter (ADC) module in these devices, supports fast 12-bit conversions with single-ended inputs.

ADC features include:

- 12-bit output resolution at 1.68Msps with greater than 11-bit ENOB
- HW averaging enables 14-bit effective resolution at 100ksps
- Up to 26 total external input channels
- Internal channels for temperature sensing and supply monitoring
- Software selectable reference:
  - Configurable internal shared reference voltage (VREF1) of 1.4V and 2.5V (requires decoupling capacitor on VREF+/- pins) to support 1.6Msps
  - Configurable internal only reference voltage (VREF2) of 1.4V and 2.5V to support 0.9Msps
  - MCU supply voltage (VDD)
  - External reference supplied to the ADC through the VREF+/- pins
- Operates in RUN, SLEEP, and STOP modes

Table 8-8 shows the ADC channel mapping in the device.

Copyright © 2025 Texas Instruments Incorporated

Table 8-8. ADC Channel Mapping

CHANNEL[0:15]	SIGNAL NAME[2]	CHANNEL[16:31]	SIGNAL NAME[1] [2]
	ADC0		ADC0
0	A0_0	16	A0_16
1	A0_1	17	A0_17
2	A0_2	18	A0_18
3	A0_3	19	A0_19
4	A0_4	20	A0_20
5	A0_5	21	A0_21
6	A0_6	22	A0_22
7	A0_7	23	A0_23
8	A0_8 / *VREF-*	24	A0_24
9	A0_9	25	A0_25
10	A0_10	26	-
11	A0_11	27	-
12	A0_12	28	*VREFINT*
13	A0_13	29	*Temperature Sensor*
14	A0_14	30	*VUSB Monitor*
15	A0_15	31	*Supply/Battery Monitor*

(1) *Italicized* signal names are purely internal to the device. These signals are used for internal peripheral interconnections.
(2) For more information about device analog connections please refer to Section 8.27

For more details, see the ADC chapter of the *MSPM0 G-Series 80-MHz Microcontrollers Technical Reference Manual*.

8.14 Temperature Sensor

The temperature sensor provides a voltage output that changes linearly with device temperature. The temperature sensor output is internally connected to one of ADC input channels to enable a temperature-to-digital conversion.

A unit-specific single-point calibration value for the temperature sensor is provided in the factory constants memory region. This calibration value represents the ADC conversion result (in ADC code format) corresponding to the temperature sensor being measured in 12-bit mode with the 1.4-V internal VREF at the factory trim temperature (TS_{TRIM}).

The ADC and VREF configuration for the above measurement is as the following: RES=0 (12-bit mode), VRSEL=2h (internal VREF), BUFCONFIG=1h (1.4V VREF), ADC t_{Sample}=12.5µs. This calibration value can be used with the temperature sensor temperature coefficient (TS_c) to estimate the device temperature.

See the temperature sensor section of the *MSPM0 G-Series 80-MHz Microcontrollers Technical Reference Manual* for guidance on estimating the device temperature with the factory trim value.

8.15 VREF

The shared voltage reference modules (VREF1 and VREF2) in these devices contain a configurable voltage reference buffer which allows users to supply a stable reference to on-board analog peripherals. It also supports bringing in an external reference for applications where higher accuracy is required.

VREF1 features include:

- 1.4V and 2.5V user-selectable internal references
- Internal reference supports full speed ADC operation at 1.6Msps
- Support for comparator operation
- Support for bringing in an external reference on VREF+/- device pins

- Requires a decoupling capacitor placed on VREF+/- pins for proper operation. See VREF for more details.

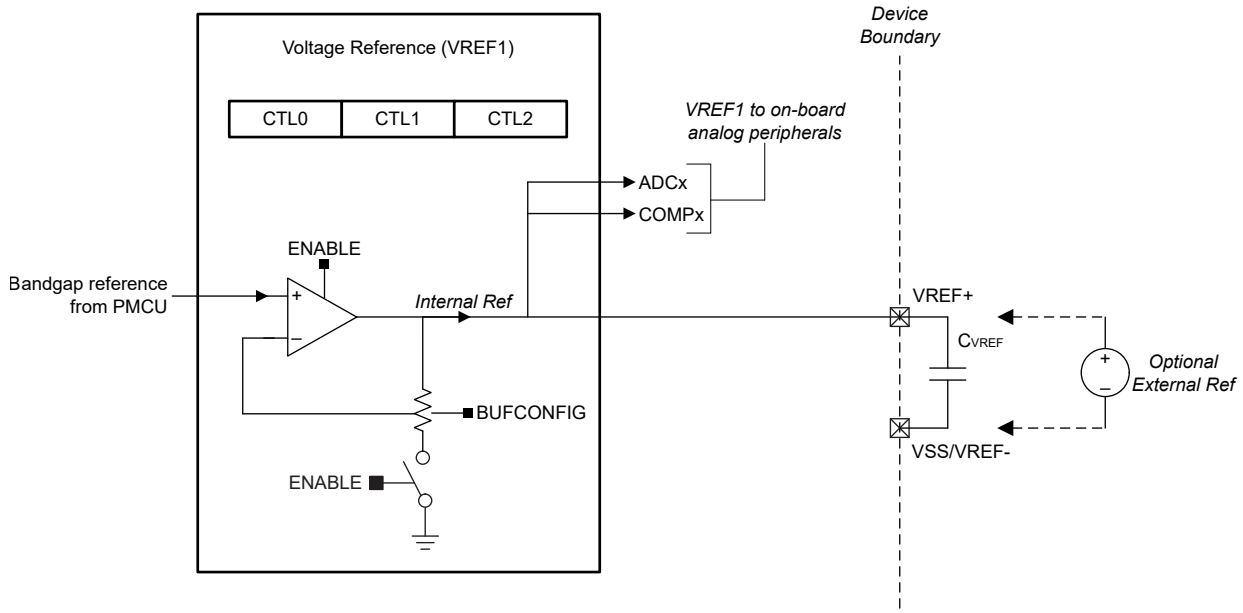

Figure 8-2. VREF1 module

VREF2 (VREFINT) features include:

- 1.4V and 2.5V user-selectable internal references
- Internal reference supports reduced speed ADC operation at 0.9Msps
- Does not require a decoupling capacitor placed on VREF+/- pins for proper operation.

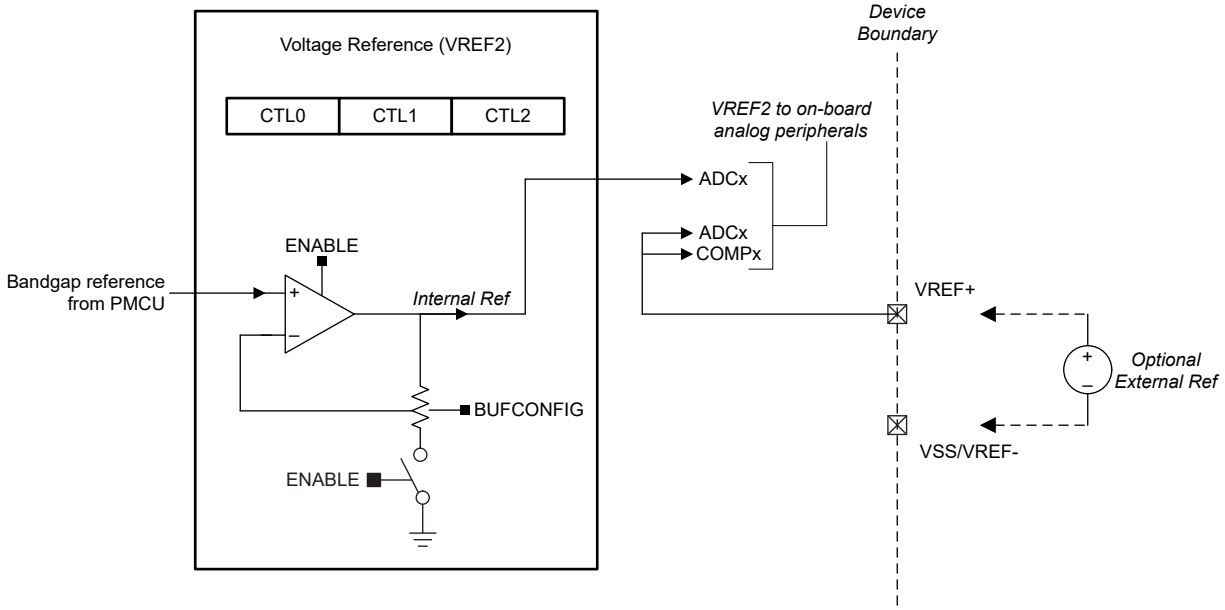

Figure 8-3. VREF2 (VREFINT) module

For more details, see the VREF chapter of the *MSPM0 G-Series 80-MHz Microcontrollers Technical Reference Manual*.

Copyright © 2025 Texas Instruments Incorporated

8.16 COMP

The comparator peripheral in the device compares the voltage levels on two inputs terminals and provides a digital output based on this comparison. It supports the following key features:

- Programmable hysteresis
- Programmable reference voltage:
  - External reference voltage (VREF IO)
  - Internal VREF1 reference voltage (1.4V, 2.5V)
  - Integrated 8-bit reference DAC
- Configurable operation modes:
  - High-speed mode
  - Low-power mode
- Programmable output glitch filter delay
- Supports 6 blanking sources from TIMx instances (see Table 8-9)
- Device wakeup from all low power modes using comparator output
- Output connected to advanced timer fault handling mechanism
- Selection of comparator channel inputs from device pins or internal analog module (see Table 8-10)

Table 8-9. COMP Blanking Source Table

CTL2.BLANKSRC	BLANKING SOURCE
1	TIMA0.CC2
2	TIMA0.CC3
3	TIMG0.CC0
4	TIMG0.CC1
5	TIMG6.CC1
6	TIMG7.CC1

Table 8-10. COMP0 Input Channel Selection

IPSEL / IMSEL BITS	POSITIVE TERMINAL INPUT	NEGATIVE TERMINAL INPUT
0x0	COMP0_IN0+	COMP0_IN0-
0x1	COMP0_IN1+	COMP0_IN1-
0x2	COMP0_IN2+	COMP0_IN2-
0x3	COMP0_IN3+	-
0x5	-	Temperature Sensor

For more information about device analog connections, see Section 8.27.

For more details, see the COMP chapter of the *MSPM0 G-Series 80-MHz Microcontrollers Technical Reference Manual*.

8.17 Security

This device offers several security features, including:

- Debug security
- Device identify
- AES-128/256 accelerator with support for GCM/GMAC, CCM/CBC-MAC, CBC, CTR,
- Flexible firewalls for protecting code and data
  - Flash write-erase protection
  - Flash read-execute protection
  - Flash IP protection
  - SRAM write-execute mutual exclusion
- Secure boot
- Secure firmware update

Copyright © 2025 Texas Instruments Incorporated

- Secure key storage for up to four AES keys
- Customer secure code
- Hardware monotonic counter
- Cyclic redundancy checker (CRC-16, CRC-32) with support for custom polynomial

For more details, see the Security chapter of the *MSPM0 G-Series 80-MHz Microcontrollers Technical Reference Manual*.

8.18 AESADV

The AES advanced (AESADV) accelerator module performs encryption and decryption of 128-bit data blocks with a 128-bit or 256-bit key in hardware according to the advanced encryption standard (AES). AES is a symmetric-key block cipher algorithm specified in FIPS PUB 197.

The AESADV accelerator features include:

- AES operation with 128-bit and 256-bit keys
- Key scheduling in hardware
- Enc/decrypt only modes: CBC, CFB-1, CFB-8, CFB-128, OFB-128, CTR/ICM
- Authentication only modes: CBC-MAC, CMAC
- AES-CCM
- AES-GCM
- AES-CCM and AES-GCM modes support continuation with hold/resume of payload data
- 32-bit word access to provide key data, input data, and output data
- AESADV ready interrupt
- DMA triggers for input/output data
- Supported in RUN and SLEEP (see the *Operating Modes* section of the device technical reference manual)

For more details, see the AESADV chapter of the *MSPM0 G-Series 80-MHz Microcontrollers Technical Reference Manual*.

8.19 Keystore

The Keystore controller provides secure management of the Advanced Encryption Engine (AES) keys. The use-model of the keystore controller is to securely deposit keys into it during the execution of customer secure code, and have the AES engine access them subsequently in a secure manner without leaking any key data to observers. Both 128 and 256-bit keys can be stored in the keystore's key slots. The keystore and its interaction with the AES engine are designed for secure operation including thwarting partial key modification attacks.

- Support for storage of up to 4 keys

For more details, see the KEYSTORE chapter of the *MSPM0 G-Series 80-MHz Microcontrollers Technical Reference Manual*.

8.20 CRC-P

The cyclical redundancy check (CRC) module provides a signature for an input data sequence. Key features of the CRC module include:

- Support for 16-bit CRC based on CRC16-CCITT
- Support for 32-bit CRC based on CRC32-ISO3309
- Support for bit reversal
- Support for custom polynomials

For more details, see the CRC chapter of the *MSPM0 G-Series 80-MHz Microcontrollers Technical Reference Manual*.

8.21 Serial Communication Interfaces

Copyright © 2025 Texas Instruments Incorporated

8.21.1 UNICOMM (UART/I²C/SPI)

UNICOMM is a highly flexible peripheral which can be configured as a UART, SPI, I²C-Controller or I²C-Target function. The user can select one of the serial interfaces before configuration and data transfer. The peripheral uses a common FIFO per instance to maximize the device capability based on the operating state. A scalable peripheral group combines one or more UNICOMM for special functions like I²C loopback and is an optional configuration. Table 8-11 describes the grouping of UNICOMM, peripheral serial interfaces available and FIFO depth.

Table 8-11. UNICOMM (UCx) Serial Peripheral

Scalable Peripheral Group	Unicomm Instance	Local UCx Index	Global UCx Index	UART	I²C Controller	I²C Target	SPI	FIFO Depth
SPG0 (PD0)	UC0	0	0	Yes	Yes	Yes	-	4
	UC1	1	1	Yes	Yes	Yes	-	4
SPG1 (PD1)	UC2	0	2	-	-	-	Yes	4
	UC3	1	3	Yes	-	-	Yes	4

For more details, see the UNICOMM chapter of the *MSPM0 G-Series 80-MHz Microcontrollers Technical Reference Manual*.

8.21.1.1 UART (UNICOMM)

The UNICOMM-UART peripheral function provide the following key features:

- Standard asynchronous communication bits for start, stop, and parity
- Fully programmable serial interface
  - 5, 6, 7 or 8 data bits
  - Even, odd, stick, or no-parity bit generation and detection
  - 1 or 2 stop bit generation
  - LSB-first or MSB-first data transmit and receive
  - Line-break detection
  - Programmable baud rate generation with oversampling by 16, 8 or 3
- Support for waking up SYSOSC via an asynchronous fast clock request upon start bit detection when operating in low power modes
- Support transmit and receive loopback mode operation
- See Table 8-12 for detail information on supported protocols and features

Table 8-12. UNICOMM-UART feature support

UNICOMM-UART Features		(Advanced)	(Basic w/ LIN)	(Basic)
Feature Tag	**Feature Description**	**UC0**	**UC1**	**UC3**
-	Active in Stop and Standby Mode	Yes	Yes	-
UART-RX-TIMEOUT	Receive timeout and Line timeout	Yes	Yes	Yes
UART-IDLELINE-MULTIPROC	Idle-Line Multiprocessor	Yes	Yes	Yes
UART-FLOW-CONTROL	Flow control (CTS/RTS) with support for RS-485	Yes	Yes	Yes
UART-MULTIDROP-9-BIT	9-bit UART mode for multidrop systems with addressable peripherals	Yes	Yes	Yes
UART-EXT-DRIVER	External driver output enable	Yes	-	-
UART-SMARTCARD	ISO7816 smart card mode	Yes	-	Yes
UART-LIN	Local Interconnect Network (LIN)	Yes	Yes	-
UART-DALI-MANCHESTER	IEC62386 Digital Addressable Lighting Interface (DALI)	Yes	-	-
UART-IRDA	IrDA encoding and decoding	Yes	-	-

Table 8-12. UNICOMM-UART feature support (continued)

UNICOMM-UART Features		(Advanced)	(Basic w/ LIN)	(Basic)
Feature Tag	**Feature Description**	**UC0**	**UC1**	**UC3**
UART-FIFO	RX and TX FIFO	4	4	4
UART-DMA	Direct memory access (DMA)	Yes	Yes	Yes

For more details, see the UART (UNICOMM) chapter of the *MSPM0 G-Series 80-MHz Microcontrollers Technical Reference Manual*.

8.21.1.2 I2C (UNICOMM)

The inter-integrated circuit interface (I^2C) peripherals in these devices provide bidirectional data transfer with other I2C devices on the bus and support the following key features:

- 7-bit and 10-bit addressing mode with multiple 7-bit target addresses
- Multiple-controller transmitter or receiver mode
- Target receiver or transmitter mode with configurable clock stretching
- Support Standard-mode (Sm), with a bit rate up to 100 kbit/s
- Support Fast-mode (Fm), with a bit rate up to 400 kbit/s
- Support Fast-mode Plus (Fm+), with a bit rate up to 1 Mbit/s
  - Supported on open drain IOs (ODIO) and high-drive (HDIO) IOs only
- Separated transmit and receive FIFOs support DMA data transfer
- Support SMBus 3.0 with PEC, ARP, timeout detection and host support
- Wakeup from low power mode on address match
- Support analog glitch filter for input signal glitch suppression
- 4-entry transmit and receive FIFOs

- See Table 8-13 and Table 8-14 for detailed information on supported features for controller and target functions

Table 8-13. I2C Controller (UNICOMM) Features

Supported Features	(Advanced)
UNICOMM Instance	**UC0, UC1**
Supports standard-mode (Sm)	Yes
Supports Fast-mode (Fm)	Yes
Supports Fast-mode Plus (Fm+)	Yes
Supports analog glitch filter	Yes
Supports digital glitch filter	-
Supports burst mode	Yes
Supports SMBus mode	Yes

Table 8-14. I2C Target (UNICOMM) Features

Supported Features	(Advanced)
UNICOMM Instance	**UC0, UC1**
Supports standard-mode (Sm)	Yes
Supports Fast-mode (Fm)	Yes
Supports Fast-mode Plus (Fm+)	Yes
Supports analog glitch filter	Yes
Supports digital glitch filter	-

Copyright © 2025 Texas Instruments Incorporated

Table 8-14. I2C Target (UNICOMM) Features (continued)

Supported Features	(Advanced)
UNICOMM Instance	**UC0, UC1**
Supports second target address & mask	Yes
Supports SMBus mode	Yes
Supports low power wakeup	Yes

For more details, see the I2C (UNICOMM) chapter of the *MSPM0 G-Series 80-MHz Microcontrollers Technical Reference Manual*.

8.21.1.3 SPI (UNICOMM)

The serial peripheral interface (SPI) peripherals in these devices support the following key features:

- Support ULPCLK/2 bit rate and up to 32Mbits/s in both controller and peripheral mode [1]
- Configurable as a controller or a peripheral
- Support for up to 4 chip select for both controller and peripheral
- Supports single parity for transmit and receive
- Programmable clock prescaler and bit rate
- Programmable data frame size from 4 bits to 16 bits (controller mode) and 7 bits to 16 bit (peripheral mode)
- Transmit and receive FIFOs (4 entries each with 16 bits per entry) supporting DMA data transfer
- Supports TI mode and Motorola mode
- Support single bit parity in both transmit and receive paths
- See SPI (UNICOMM) Features for detailed information on supported features

Table 8-15. SPI (UNICOMM) Features

SPI Features	(Advanced)	SPI1 (Basic)
UNICOMM Instance	**UC2**	**UC3**
Controller and Peripheral mode	Yes	Yes
Supports Parity function	Yes	Yes
Supports Repeat mode transfer	Yes	-
Supports Receive timeout	Yes	-
Supports Command/Data control	Yes	-
Supports 4 chip selects	Yes	-

For more details, see the SPI (UNICOMM) chapter of the *MSPM0 G-Series 80-MHz Microcontrollers Technical Reference Manual*.

8.21.2 Universal Serial Bus (USB)

The USB controller operates as a full-speed or low-speed function controller during point-to-point communications with USB host or device functions.

The USB module has the following features:

- USB 2.0 full-speed and low-speed operation
- Integrated PHY
- Four transfer types: control, interrupt, bulk, and isochronous
- 16 endpoints
  - One dedicated control IN endpoint and one dedicated control OUT endpoint

[1] Only SPI signals on HSIO pins support data rate > 16 Mbits/s; see *Pin Diagrams* for HSIO pins.

  - 7 configurable IN endpoints and 7 configurable OUT endpoints
- 2kB of dedicated endpoint memory
- Supports USB device firmware update (DFU)

Figure 8-4 shows the USB block diagram.

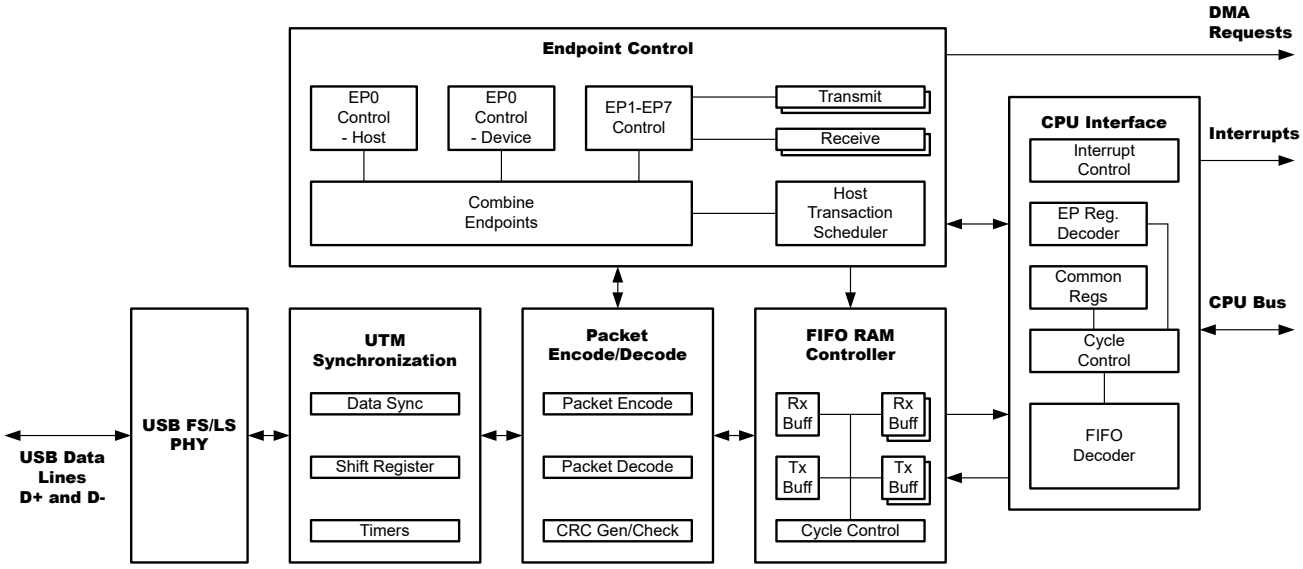

Figure 8-4. USB Block Diagram

Note

The accuracy of the on-chip USBFLL will meet the accuracy requirements of the USB protocol in device mode. For host mode, an external crystal in combination with the internal PLL oscillator is required. For applications using the USB in host mode, see electrical characteristics section for clock frequency requirements.

8.21.3 Digital Audio Interface - I2S/TDM

The I2S/TDM module provides a standardized serial interface to transfer audio data. The module can be configured in different modes including I2S standards, LSB or MSB-justified, PCM/DSP and TDM for example. It can be used in conjunction with the DMA controller.

Features:

- Configurable and independent transmitter and receiver functions on data lines
- Configurable controller or target function
- Integrated transmitter and receiver FIFO with packing feature and FIFO depth = 4
- Clock generator to target specific audio frequency generation
- Data size configuration from 8 to 32-bit audio word size
- Audio protocol: I2S, LSB or MSB-justified, PCM/DSP, TDM
- Up to 8 slots available in TDM format
- Empty slot configuration for sending 0's, 1's or Hi-Z
- Configurable bit clock sampling edge
- Frame synchronization configurable for offset and bit length
- Independent DMA request for transmitter and receiver functions

For more details, see the I2S/TDM chapter of the *MSPM0 G-Series 80-MHz Microcontrollers Technical Reference Manual*.

Copyright © 2025 Texas Instruments Incorporated

8.22 Low-Frequency Sub System (LFSS)

The Low-Frequency Sub-System (LFSS) is a sub-system which combines several functional peripherals under one shared subsystem. These peripherals are clocked by the low frequency clock (LFCLK) or need to be active during low power modes. The LFCLK has a typical frequency of 32kHz and is mainly intended for long-term timekeeping.

LFSS in this device contains following components:

- Real-time clock (RTC_B) with additional prescalar extension and timestamp captures
- An asynchronous Independent Watchdog Timer (IWDT)

For more details, see the LFSS chapter of the *MSPM0 G-Series 80-MHz Microcontrollers Technical Reference Manual*.

8.23 RTC_B

The RTC_B instance of the real-time clock operates off of a 32kHz input clock source (typically a low frequency crystal) and provides a time base to the application with multiple options for interrupts to the CPU. The RTC_B provides common key features in relation to the Low-Frequency Sub System (LFSS).

Common key features of the RTC_B include:

- Counters for seconds, minutes, hours, day of the week, day of the month, month, and year
- Binary or BCD format
- Leap-year handling
- One customizable alarm interrupt based on minute, hour, day of the week, and day of the month
- Interval alarm interrupt to wake every minute, every hour, at midnight, or at noon
- Interval alarm interrupt providing periodic wake-up at 4096, 2048, 1024, 512, 256, or 128 Hz
- Interval alarm interrupt providing periodic wake-up at 64, 32, 16, 8, 4, 2, 1, and 0.5 Hz
- Calibration for crystal offset error (up to +/- 240ppm)
- Compensation for temperature drift (up to +/- 240ppm)
- RTC clock output to pin for calibration

Table 8-16 shows the RTC features supported in this device.

Table 8-16. RTC_B Key Features

RTC Features	RTC_B
Power enable register	-
Real-time clock and calendar mode providing seconds, minutes, hours, day of week, day of month, and year	Yes
Selectable binary or binary-coded decimal (BCD) format	Yes
Leap-year correction (valid for year 1901 through 2099)	Yes
Two customizable calendar alarm interrupts based on minute, hour, day of the week, and day of the month	Yes
Interval alarm interrupt to wake every minute, every hour, at midnight, or at noon	Yes
Periodic interrupt to wake at 4096, 2048, 1024, 512, 256, or 128 Hz	Yes
Periodic interrupt to wake at 64, 32, 16, 8, 4, 2, 1, and 0.5 Hz	Yes
Interrupt capability down to STANDBY mode with STOPCLKSTBY	Yes
Calibration for crystal offset error and crystal temperature drift (up to ±240 ppm total)	Yes
RTC clock output to pin for calibration (GPIO)	-
RTC clock output to pin for calibration (TIO)	-
Three bit prescaler for heartbeat function with interrupt generation	-

Copyright © 2025 Texas Instruments Incorporated

Table 8-16. RTC_B Key Features (continued)

RTC Features	RTC_B
RTC external clock selection of untrimmed 32kHz, trimmed 512Hz, 256Hz or 1 Hz	-
RTC time stamp capture upon detection of a timer stamp event, including: • TIO event • VDD fail event	-
RTC counter lock function	-

For more details, see the RTC chapter of the *MSPM0 G-Series 80-MHz Microcontrollers Technical Reference Manual*.

8.24 IWDT_B

The independent watchdog timer (IWDT) in the LFSS is a device-independent supervisor which monitors code execution and overall hang up scenarios of the device. Due to the nature of LFSS, this IWDT has its own system independent clock source. If the application software does not successfully reset the watchdog within the programmed time, the watchdog generates a POR reset to the device.

Key features of the IWDT include:

- A 25-bit counter
- Counter driven from LFOSC (fixed 32kHz clock path) with a programmable clock divider
- Eight selectable watchdog timer periods (2ms to 2hr)

For more details, see the IWDT chapter of the *MSPM0 G-Series 80-MHz Microcontrollers Technical Reference Manual*.

8.25 WWDT

The windowed watchdog timer (WWDT) can be used to supervise the operation of the device, specifically code execution. The WWDT can be used to generate a reset or an interrupt if the application software does not successfully reset the watchdog within a specified window of time. Key features of the WWDT include:

- 25-bit counter
- Programmable clock divider
- Eight software selectable watchdog timer periods
- Eight software selectable window sizes
- Support for stopping the WWDT automatically when entering a sleep mode
- Interval timer mode for applications which do not require watchdog functionality

For more details, see the WWDT chapter of the *MSPM0 G-Series 80-MHz Microcontrollers Technical Reference Manual*.

8.26 Timers (TIMx)

There are three types of timer peripherals in these devices support that following key features: TIMGx (general-purpose timer), TIMAx (advanced timer), and TIMBx (basic timer). TIMGx is a subset of TIMAx, which means common features between timer instances are software compatible. For specific configurations, see Table 8-17:

Specific features for the general-purpose timer **(TIMGx)** include:

- 16-/32-bit up, down, up-down or down-up counter, with repeat-reload mode
- Selectable and configurable clock source
- 8-bit programmable prescaler to divide the counter clock frequency
- Two independent channels for
  - Output compare
  - Input capture

Copyright © 2025 Texas Instruments Incorporated

  - PWM output
  - One-shot mode
- Shadow CC register available in TIMG6, TIMG7
- Shadow register for load available in TIMG6, TIMG7
- Support synchronization and cross trigger among different TIMx instances
- Support interrupt/DMA trigger generation and cross peripherals (such as ADC) trigger capability

Specific features for the advanced timer **(TIMAx)** include:

- 16-bit down or up-down counter, with repeat-reload mode
- Selectable and configurable clock source
- 8-bit programmable prescaler to divide the counter clock frequency
- Repeat counter to generate an interrupt or event only after a given number of cycles of the counter
- Up to four independent channels for
  - Output compare
  - Input capture
  - PWM output
  - One-shot mode
- Shadow register for load and CC register available
- Complementary output PWM with programmable dead band insertion
- Asymmetric PWM
- Configurable fault handling mechanism for
  - Fast PWM responses (<40ns) to external fault inputs or comparator events
  - Outputting signals in a safe user-defined state when a latched fault condition has occurred
- Support synchronization and cross trigger among different TIMx instances
- Support interrupt and DMA trigger generation and cross peripherals (such as ADC) trigger capability
- Two additional capture/compare channels for internal events

Specific features for the basic software timer **(TIMBx)** include:

- Support for a counter array containing 4 counters
- Each counter is a 16 bit counter
- Clocked by the PD0 bus clock (ULPCLK)
- Ability to concatenate 2 or more counters to create longer time durations
- Ability to measure timing properties of external events
  - Duration between 2 pulses on an event
  - Counting the number of events
  - Ability to start/stop the counter based on external events or internal events

Table 8-17. TIMx Configurations

TIMER NAME	POWER DOMAIN	RESOLUTION	PRESCALER	REPEAT COUNTER	CAPTURE / COMPARE CHANNELS	PHASE LOAD	SHADOW LOAD	SHADOW CC	DEADBAND	FAULT	QEI
TIMG0	PD0	16-bit	8-bit	–	2	–	–	–	–	–	–
TIMG6	PD1	16-bit	8-bit	–	2	–	–	–	–	–	–
TIMG7	PD1	16-bit	8-bit	–	2	–	Yes	Yes	–	–	–
TIMA0	PD1	16-bit	8-bit	8-bit	4	Yes	Yes	Yes	Yes	Yes	–
TIMB0	PD0	16-bit	–	–	–	–	–	–	–	–	–

Table 8-18. TIMx Cross Trigger Map

TSEL.ETSEL Selection	PD0 Timers	PD1 Timers		
	TIMG0	TIMA0	TIMG6	TIMG7
0	TIMA0.TRIG0	TIMA0.TRIG0	TIMA0.TRIG0	TIMA0.TRIG0
1	TIMG0.TRIG0	TIMG0.TRIG0	TIMG0.TRIG0	TIMG0.TRIG0
2	TIMG6.TRIG0	TIMG6.TRIG0	TIMG6.TRIG0	TIMG6.TRIG0
3	TIMG7.TRIG0	TIMG7.TRIG0	TIMG7.TRIG0	TIMG7.TRIG0

Copyright © 2025 Texas Instruments Incorporated

Table 8-18. TIMx Cross Trigger Map (continued)

TSEL.ETSEL Selection	PD0 Timers	PD1 Timers		
	TIMG0	TIMA0	TIMG6	TIMG7
4 to 31	Reserved			

Table 8-19. TIMBx Clock Source Selection

CTRREGSx.CTL0.CLKSEL	Counter update from event source
0	Bus Clock
1	Overflow from Counter 0
2	Overflow from Counter 1
3	Overflow from Counter 2
4 to 8	Reserved
9	GPIO0 Publisher 1
10	GPIO0 Publisher 2
11	GPIO1 Publisher 1
12	GPIO1 Publisher 2
13	DMA Interrupt
14	Reserved
15	TIMBx Generic Event Subscriber

Table 8-20. TIMBx Start/Stop/Reset Source Selection

CTRREGSx.CTL0.STARTSEL CTRREGSx.CTL0.STOPSEL CTRREGSx.CTL0.RESETSEL	Start/Stop/Reset from event source
0	No Action
1	Overflow from Counter 0
2	Overflow from Counter 1
3	Overflow from Counter 2
4 to 8	Reserved
9	GPIO0 Publisher 1
10	GPIO0 Publisher 2
11	GPIO1 Publisher 1
12	GPIO1 Publisher 2
13	DMA Interrupt
14	Reserved
15	TIMBx Generic Event Subscriber

For more details, see the TIMx chapter of the MSPM0 G-Series 80-MHz Microcontrollers Technical Reference Manual

Copyright © 2025 Texas Instruments Incorporated

8.27 Device Analog Connections

Figure 8-5 shows the internal analog connection of the device.

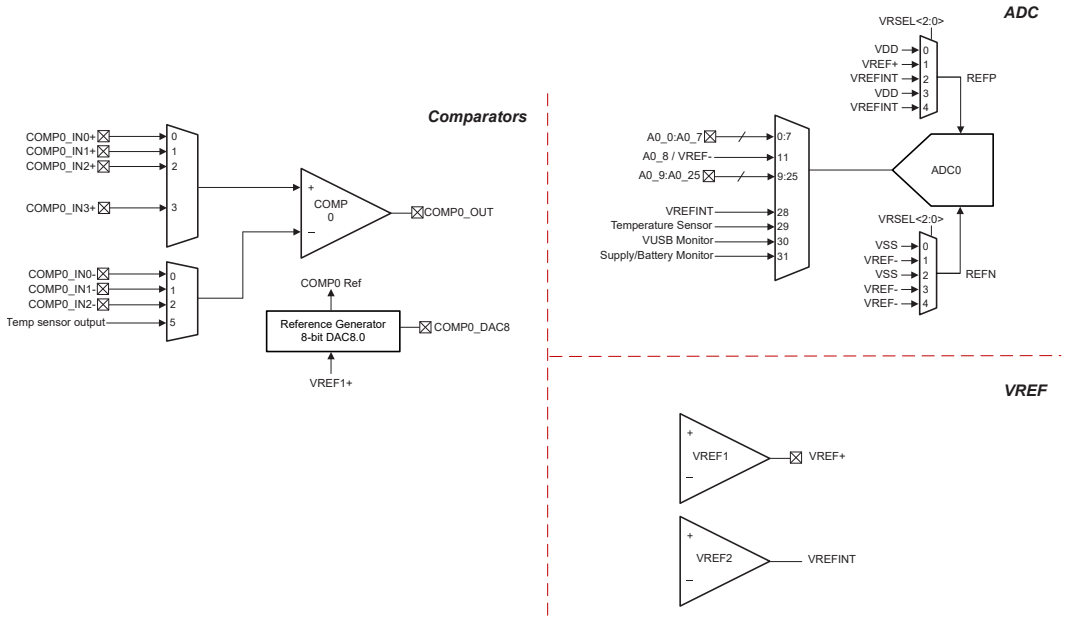

Figure 8-5. Device Analog Connection

8.28 Input/Output Diagrams

The IOMUX manages the selection of which peripheral function is to be used on a digital IO. It also provides the controls for the output driver, input path, and the wake-up logic for wakeup from SHUTDOWN mode. For more information, refer to the IOMUX section of the *MSPM0 G-Series 80-MHz Microcontrollers Technical Reference Manual*.

The mixed-signal IO pin slice diagram for a full featured IO pin is shown in Figure 8-6. Not all pins will have analog functions, wake-up logic, drive strength control, and pullup or pulldown resistors available. See the device-specific data sheet for detailed information on what features are supported for a specific pin.

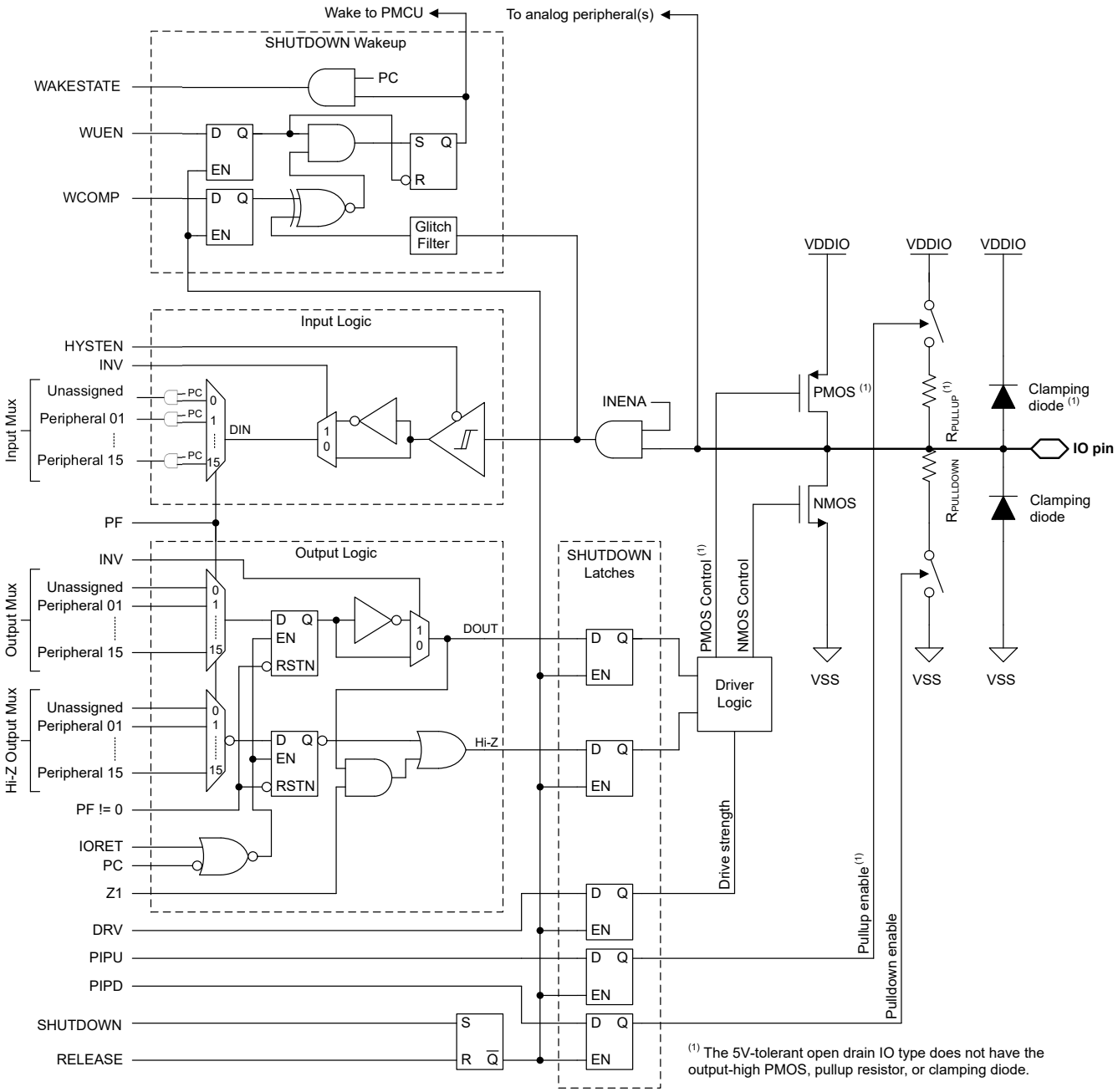

Figure 8-6. Superset Input/Output Diagram

Copyright © 2025 Texas Instruments Incorporated

8.29 Serial Wire Debug Interface

A serial wire debug (SWD) two-wire interface is provided via an ARM compatible serial wire debug port (SW-DP) to enable access to multiple debug functions within the device. For a complete description of the debug functionality offered on MSPM0 devices, see the DEBUG chapter of the *MSPM0 G-Series 80-MHz Microcontrollers Technical Reference Manual*.

Table 8-21. Serial Wire Debug Pin Requirements and Functions

DEVICE SIGNAL	DIRECTION	SWD FUNCTION
SWCLK	Input	Serial wire clock from debug probe
SWDIO	Input/Output	Bi-directional (shared) serial wire data

8.30 Boot Strap Loader (BSL)

The boot strap loader (BSL) enables configuration of the device as well as programming of the device memory through a serial interface such as UART, I^2C, or USB. Access to the device memory and configuration through the BSL is protected by a 256-bit user-defined password, and it is possible to completely disable the BSL in the device configuration, if desired. The BSL is enabled by default from TI to support use of the BSL for production programming.

Using the BSL can involve the following pins, depending on the method:

- UART interface: BSLRX and BSLTX signals
- I^2C interface: BSLSCL and BSLSDA signals
- USB interface: BSLUSB_DM and BSLUSB_DP
- Additional methods: BSL_invoke and NRST signals may be used for controlled invokation of the bootloader by an external host

If enabled, the BSL may be invoked (started) in the following ways:

- The BSL is invoked during the boot process if the BSL_invoke pin state matches the defined BSL_invoke logic level. If the device fast boot mode is enabled, this invocation check is skipped. An external host can force the device into the BSL by asserting the invoke condition and applying a reset pulse to the NRST pin to trigger a BOOTRST, after which the device will verify the invoke condition during the reboot process and start the BSL if the invoke condition matches the expected logic level.
- The BSL is automatically invoked during the boot process if the reset vector and stack pointer are left unprogrammed. As a result, a blank device from TI will invoke the BSL during the boot process without any need to provide a hardware invoke condition on the BSL_invoke pin. This enables production programming using just the serial interface signals.
- The BSL may be invoked at runtime from application software by issuing a SYSRST with BSL entry command.

Table 8-22. BSL Pin Requirements and Functions

DEVICE SIGNAL	CONNECTION	BSL FUNCTION
BSLRX	Required for UART	UART receive signal (RXD), an input
BSLTX	Required for UART	UART transmit signal (TXD) an output
BSLSCL	Required for I2C	I^2C BSL clock signal (SCL)
BSLSDA	Required for I2C	I^2C BSL data signal (SDA)
BSLUSB_DM	Required for USB	USB data minus signal (D-)
BSLUSB_DP	Required for USB	USB data positive signal (D+)
BSL_invoke	Optional	Active-high digital input used to start the BSL during boot
NRST	Optional	Active-low reset pin used to trigger a reset and subsequent check of the invoke signal (BSL_invoke)

For a complete description of the BSL functionality and command set, see the MSPM0 boot strap loader user's guide.

8.31 Device Factory Constants

All devices include a memory-mapped FACTORY region which provides read-only data describing the capabilities of a device as well as any factory-provided trim information for use by application software. Please refer to Factory Constants chapter of the *MSPM0 G-Series 80-MHz Microcontrollers Technical Reference Manual* for more information.

Table 8-23. DEVICEID

DEVICEID address is 0x41C4.0004, PARTNUM is bit 12 to 27, MANUFACTURER is bit 1 to 11.

Device	PARTNUM	MANUFACTURER
MSPM0G5115	0xBBBC	0x17
MSPM0G5116	0xBBBC	0x17
MSPM0G5117	0xBBBC	0x17

Table 8-24. USERID

USERID address is 0x41C4.0008, PART is bit 0 to 15, VARIANT is bit 16 to 23

Device	Part	Variant
MSPM0G5115SPMR	0x8DCB	0x10
MSPM0G5115SPTR	0x8DCB	0x11
MSPM0G5115SRGZR	0x8DCB	0x12
MSPM0G5115SRHBR	0x8DCB	0x13
MSPM0G5115SRGER	0x8DCB	0x14
MSPM0G5115SDGS20R	0x8DCB	0x16
MSPM0G5115SRUYR	0x8DCB	0x17
MSPM0G5115S28YCJR	0x8DCB	0x18
MSPM0G5116SPMR	0xD851	0x10
MSPM0G5116SPTR	0xD851	0x11
MSPM0G5116SRGZR	0xD851	0x12
MSPM0G5116SRHBR	0xD851	0x13
MSPM0G5116SRGER	0xD851	0x14
MSPM0G5116SDGS20R	0xD851	0x16
MSPM0G5116SRUYR	0xD851	0x17
MSPM0G5116S28YCJR	0xD851	0x18
MSPM0G5117SPMR	0x778B	0x10
MSPM0G5117SPTR	0x778B	0x11
MSPM0G5117SRGZR	0x778B	0x12
MSPM0G5117SRHBR	0x778B	0x13
MSPM0G5117SRGER	0x778B	0x14
MSPM0G5117SDGS20R	0x778B	0x16
MSPM0G5117SRUYR	0x778B	0x17
MSPM0G5117S28YCJR	0x778B	0x18

8.32 Identification

Revision and Device Identification

The hardware revision and device identification values are stored in the memory-mapped FACTORY region, refer to Device Factory Constants section, which provides read-only data describing the capabilities of a device

Copyright © 2025 Texas Instruments Incorporated

as well as any factory-provided trim information for use by application software. Refer to Factory Constants chapter of the *MSPM0 G-Series 80-MHz Microcontrollers Technical Reference Manual* for more information.

The device revision and identification information are also included as part of the top-side marking on the device package. The device-specific errata sheet describes these markings (see Section 10.4)

9 Applications, Implementation, and Layout

9.1 Typical Application

Note

Information in the following applications sections is not part of the TI component specification, and TI does not warrant its accuracy or completeness. TI's customers are responsible for determining suitability of components for their purposes, as well as validating and testing their design implementation to confirm system functionality.

9.1.1 Schematic

TI recommends connecting a combination of a 10-µF and a 0.1-µF low-ESR ceramic decoupling capacitor across the VDD and VSS pins, as well as placing these capacitors as close as possible to the supply pins that they decouple (within a few millimeters) to achieve a minimal loop area. The 10-µF bulk decoupling capacitor is a recommended value for most applications, but this capacitance may be adjusted if needed based upon the PCB design and application requirements. For example, larger bulk capacitors can be used, but this can affect the supply rail ramp-up time.

The NRST reset pin must be pulled up to VDD (supply level) for the device to release from RESET state and start the boot process. TI recommends connecting an external 47-kΩ pullup resistor with a 10-nF pulldown capacitor for most applications, enabling the NRST pin to be controlled by another device or a debug probe.

The SYSOSC frequency correction loop (FCL) circuit utilizes an external 100-kΩ with 0.1% tolerance resistor with a temperature coefficient (TCR) of 25ppm/C or better populated between the ROSC pin and VSS. This resistor establishes a reference current to stabilize the SYSOSC frequency through a correction loop. This resistor is required if the FCL feature is used for higher accuracy, and it is not required if the SYSOSC FCL is not enabled. When the FCL mode is not used, the PA2 pin may be used as a digital input/output pin.

A 0.47-µF tank capacitor is required for the VCORE pin and must be placed close to the device with minimum distance to the device ground. Do not connect other circuits to the VCORE pin.

For the 5-V-tolerant open drain (ODIO), a pullup resistor is required to output high for I2C and UART functions, as the open drain IO only implement a low-side NMOS driver and no high-side PMOS driver. The 5V-tolerant open drain IO are fail-safe and may have a voltage present even if VDD is not supplied.

The USB circuit requires a capacitor across the VUSB and VSS pins. If VUSB sourced from VCC, recommend connecting a 0.1-µF low-ESR ceramic decoupling capacitor. If VUSB sourced from a separated power supply, recommend connecting a combination of a 1-µF and a 0.1-µF low-ESR ceramic decoupling capacitor. As well as place the capacitor as close as possible to the supply pins that they decouple (within a few millimeters) to achieve a minimal loop area.

Copyright © 2025 Texas Instruments Incorporated

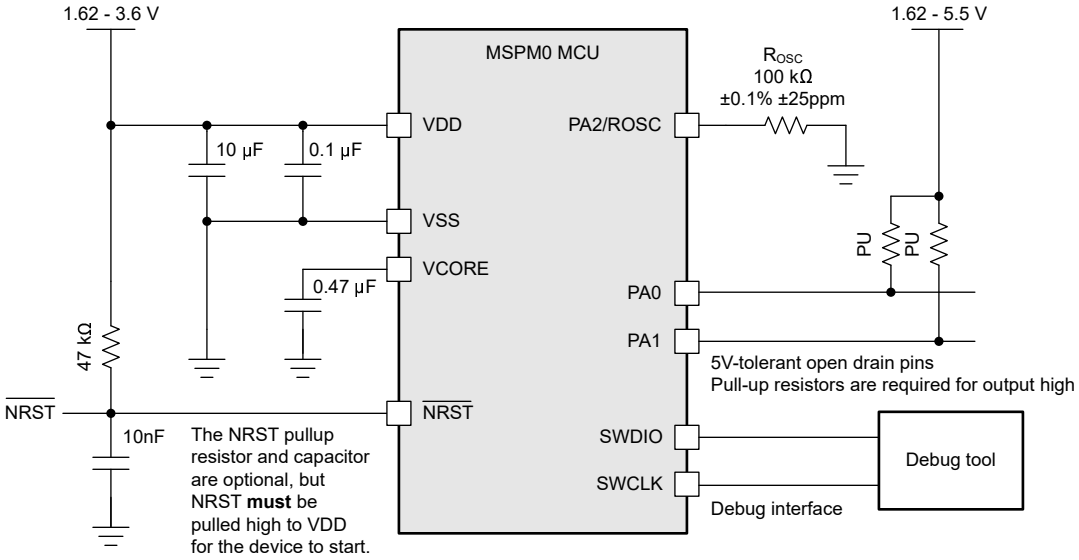

Figure 9-1. Basic Application Schematic

10 Device and Documentation Support

TI offers an extensive line of development tools. Tools and software to evaluate the performance of the device, generate code, and develop solutions are listed below.

10.1 Getting Started and Next Steps

For more information on the MSP low-power microcontrollers and the tools and libraries that are available to help with development, visit the Texas Instruments *Arm Cortex-M0+ MCUs* page.

10.2 Device Nomenclature

To designate the stages in the product development cycle, TI assigns prefixes to the part numbers of all MSP MCU devices and support tools. . Each MSP MCU commercial family member has one of two prefixes: MSP or X. These prefixes represent evolutionary stages of product development from engineering prototypes (X) through fully qualified production devices (MSP).

X – Experimental device that is not necessarily representative of the final device's electrical specifications

MSP – Fully qualified production device

X devices are shipped against the following disclaimer:

"Developmental product is intended for internal evaluation purposes." MSP devices have been characterized fully, and the quality and reliability of the device have been demonstrated fully. TI's standard warranty applies. Predictions show that prototype devices (X) have a greater failure rate than the standard production devices. TI recommends that these devices not be used in any production system because their expected end-use failure rate still is undefined. Only qualified production devices are to be used.

TI device nomenclature also includes a suffix with the device family name. This suffix indicates the temperature range, package type, and distribution format. Figure 10-1 provides a legend for reading the complete device name.

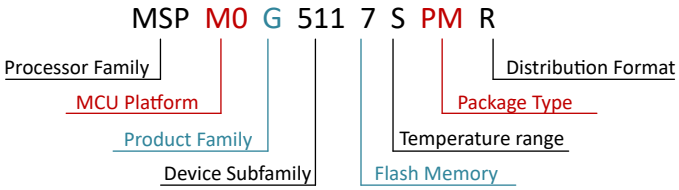

Figure 10-1. Device Nomenclature

Table 10-1. Device Nomenclature

Processor Family	MSP = Mixed-signal processor X= Experimental silicon
MCU Platform	M0 = Arm based 32-bit M0+
Product Family	G = 80-MHz frequency
Device Subfamily	511 = 1x USB2.0-FS, 1x I2S, 1x ADC, 1x COMP
Flash Memory	5 = 32KB 6= 64KB 7= 128KB
Temperature Range	S = –40°C to 125°C
Package Type	See the Device Comparison section and https://www.ti.com/packaging

Copyright © 2025 Texas Instruments Incorporated

Table 10-1. Device Nomenclature (continued)

Distribution Format	T = Small reel R = Large reel No marking = Tube or tray

For orderable part numbers of MSP devices in different package types, see the Package Option Addendum of this document, ti.com, or contact your TI sales representative.

10.3 Tools and Software

Design Kits and Evaluation Modules

MSPM0 LaunchPad (LP) Boards: LP-MSPM0G5187	Empowers you to immediately start developing on the industry's best integrated analog and most cost-optimized general purpose MSPM0 MCU family. Exposes all device pins and functionality; includes some built-in circuitry, out-of-box software demos, and on-board XDS110 debug probe for programming/debugging/ EnergyTrace. The LP ecosystem includes dozens of BoosterPack stackable plug-in modules to extend functionality.

Embedded Software

MSPM0 Software Development Kit (SDK)	Contains software drivers, middleware libraries, documentation, tools, and code examples that create a familiar and easy user experience for all MSPM0 devices.

Software Development Tools

TI Developer Zone	Start your evaluation and development on a web browser without any installation. Cloud tools also have a downloadable, offline version.
TI Resource Explorer	Online portal to TI SDKs. Accessible in CCS IDE or in TI Cloud Tools.
SysConfig	Intuitive GUI to configure device and peripherals, resolve system conflicts, generate configuration code, and automate pin mux settings. Accessible in CCS IDE ,in TI Cloud Tools or a standalone version. (offline version)
MSP Academy	Great starting point for all developers to learn about the MSPM0 MCU Platform with training modules that span a wide range of topics. Part of TIRex.
GUI Composer	GUIs that simplify evaluation of certain MSPM0 features, such as configuring and monitoring a fully integrated analog signal chain without any code needed.

IDE & compiler toolchains

Code Composer Studio™ (CCS)	Code Composer Studio is an integrated development environment (IDE) for TI's microcontrollers and processors. It comprises a suite of tools used to develop and debug embedded applications. CCS is completely free to use and is available on Eclipse and Theia frameworks.
IAR Embedded Workbench® IDE	IAR Embedded Workbench for Arm delivers a complete development toolchain for building and debugging embedded applications for MSPM0.The included IAR C/C++ Compiler generates highly optimized code for your application, and the C-SPY Debugger is a fully integrated debugger for source and disassembly level debugging with support for complex code and data breakpoint.
Keil® MDK IDE	Arm Keil MDK is a complete debugger and C/C++ compiler toolchain for building and debugging embedded applications for MSPM0.Keil MDK includes a fully integrated debugger for source and disassembly level debugging.MDK provides full CMSIS compliance.
TI Arm-Clang	TI Arm Clang is included in Code Composer Studio.

Copyright © 2025 Texas Instruments Incorporated

GNU Arm Embedded Toolchain	The MSPM0 SDK supports development using the open-source Arm GNU Toolchain.Arm GCC is supported by Code Composer Studio (CCS).

10.4 Documentation Support

To receive notification of documentation updates, navigate to the device product folder on ti.com. Click on *Subscribe to updates* to register and receive a weekly digest of any product information that has changed. For change details, review the revision history included in any revised document.

The following documents describe the MSPM0 MCUs. Copies of these documents are available on the Internet at www.ti.com.

Technical Reference Manual

MSPM0 G-Series 80-MHz Microcontrollers Technical Reference Manual	This manual describes the modules and peripherals of the MSPM0G family of devices. Each description presents the module or peripheral in a general sense. Not all features and functions of all modules or peripherals are present on all devices. In addition, modules or peripherals can differ in their exact implementation on different devices. Pin functions, internal signal connections, and operational parameters differ from device to device. See the device-specific data sheet for these details.

10.5 Support Resources

TI E2E™ support forums are an engineer's go-to source for fast, verified answers and design help — straight from the experts. Search existing answers or ask your own question to get the quick design help you need.

Linked content is provided "AS IS" by the respective contributors. They do not constitute TI specifications and do not necessarily reflect TI's views; see TI's Terms of Use.

10.6 Trademarks

LaunchPad™, Code Composer Studio™, and TI E2E™ are trademarks of Texas Instruments.
Arm® and Cortex® are registered trademarks of Arm Limited.
All trademarks are the property of their respective owners.

10.7 Electrostatic Discharge Caution

This integrated circuit can be damaged by ESD. Texas Instruments recommends that all integrated circuits be handled with appropriate precautions. Failure to observe proper handling and installation procedures can cause damage.

ESD damage can range from subtle performance degradation to complete device failure. Precision integrated circuits may be more susceptible to damage because very small parametric changes could cause the device not to meet its published specifications.

10.8 Glossary

TI Glossary	This glossary lists and explains terms, acronyms, and definitions.

11 Revision History

NOTE: Page numbers for previous revisions may differ from page numbers in the current version.

Changes from November 1, 2025 to December 31, 2025 (from Revision * (November 2025) to Revision A (December 2025)) **Page**

- Updated USB pin IO max voltage ratings in absolute maximum ratings specifications table 35
- Added max current loading specification for VUSB33 pin in absolute maximum ratings specifications table.. 35
- Updated IDD supply current specification values across multiple operating modes in the Supply Current Characteristics specifications table..... 35
- Updated cold-boot BOR specification values in the POR and BOR specifications table 35
- Updated SYSOSC accuracy values for internal-resistor FCL-ON mode condition in SYSOSC specifications table..... 35

Copyright © 2025 Texas Instruments Incorporated

- Updated USBFLL output accuracy and lock time specifications in USBFLL specifications table..... 35
- Added I_lkg specification values for USBIO type in Digital IO Electrical Characteristics specifications table..35
- Added PSRR_DC specification values in ADC Electrical Characteristics specifications table.....35
- Updated test conditions for ENOB and SNR to FIN=1kHz in oversampling mode for ADC Electrical Characteristics specifications table.....35
- Added I_VUSB33 quiescent current specification values in the USB Characteristics (USB Mode) specificaftions table..... 35
- Updated I2S specification values in the Serial Audio specifications table.....35
- Added detailed DMA Features table to DMA detailed descriptions section..... 64
- Updated maximum ADC speeds claimed in ADC detailed descriptions section..... 70
- Added VREF1 and VREF2 connection diagrams in VREF detailed descriptions section..... 71
- Updated maximum ADC speeds claimed in VREF detailed descriptions section..... 71
- Updated security detailed description sections to properly list all security features..... 73
- Updated UNICOMM feature descriptions and instance mapping table to include global and local indexing details..... 75
- Updated analog connections diagram..... 83

12 Mechanical, Packaging, and Orderable Information

The following pages include mechanical, packaging, and orderable information. This information is the most current data available for the designated devices. This data is subject to change without notice and revision of this document. For browser-based versions of this data sheet, refer to the left-hand navigation.

Copyright © 2025 Texas Instruments Incorporated

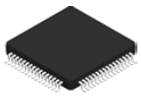

PACKAGE OUTLINE

PM0064A

LQFP - 1.6 mm max height

PLASTIC QUAD FLATPACK

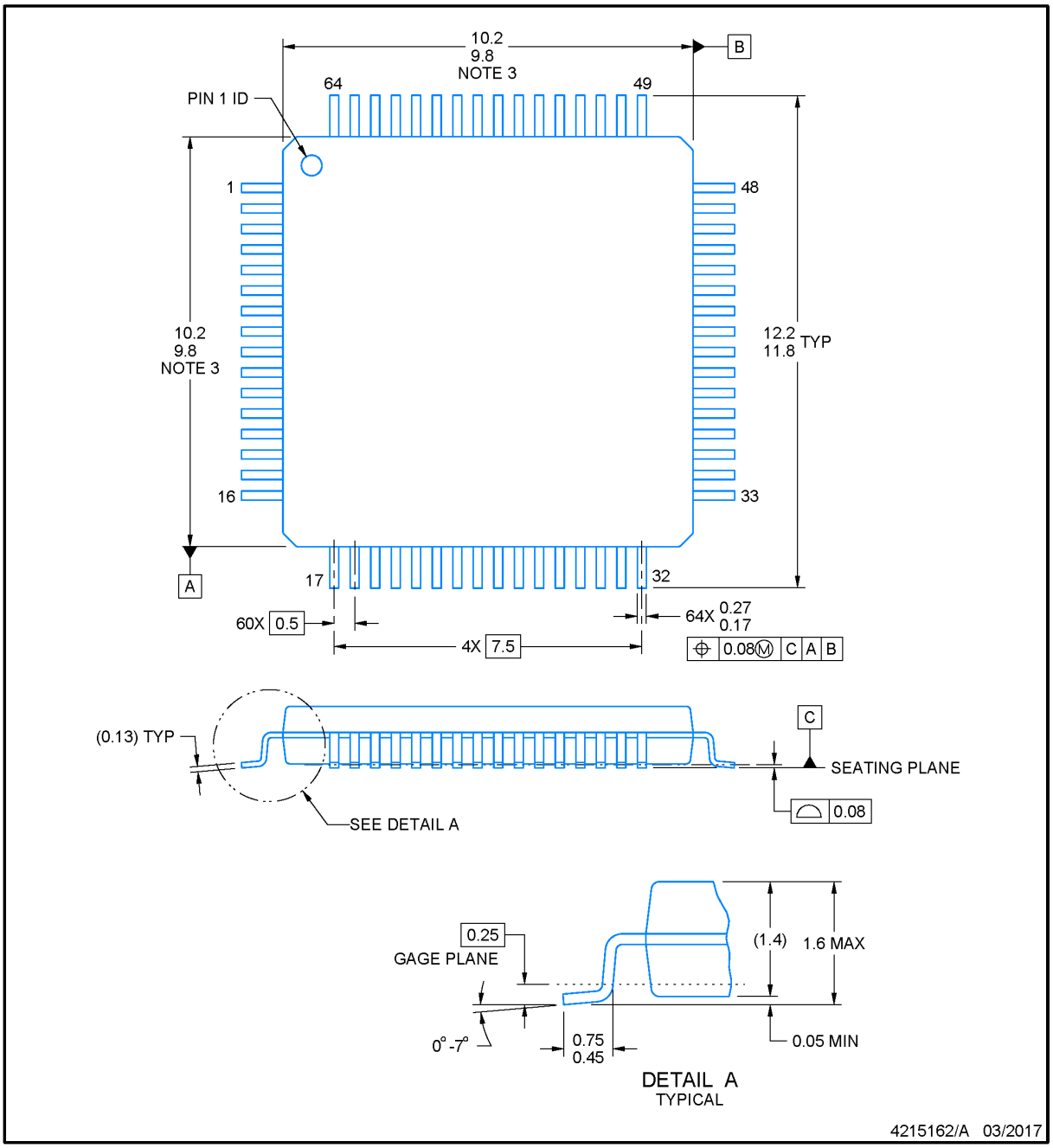

NOTES:

1. All linear dimensions are in millimeters. Any dimensions in parenthesis are for reference only. Dimensioning and tolerancing per ASME Y14.5M.
2. This drawing is subject to change without notice.
3. This dimension does not include mold flash, protrusions, or gate burrs. Mold flash, protrusions, or gate burrs shall not exceed 0.15 mm per side.
4. Reference JEDEC registration MS-026.

EXAMPLE BOARD LAYOUT

PM0064A

LQFP - 1.6 mm max height

PLASTIC QUAD FLATPACK

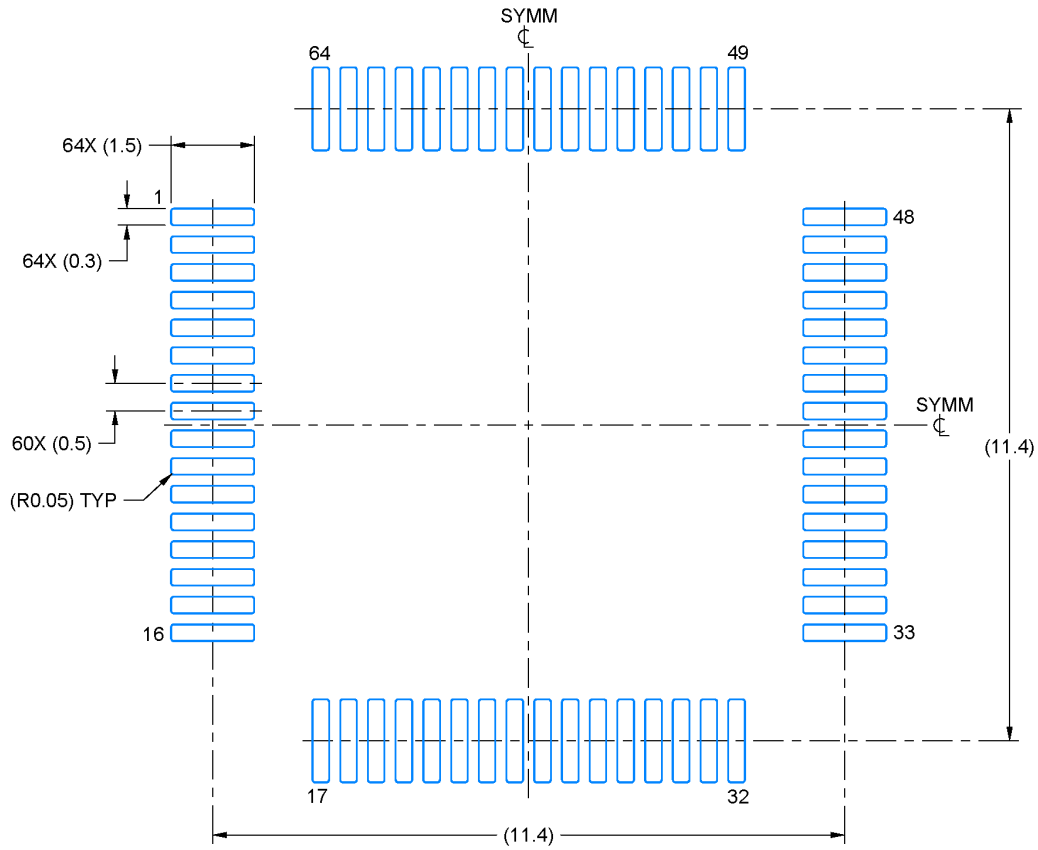

LAND PATTERN EXAMPLE
EXPOSED METAL SHOWN
SCALE:8X

SOLDER MASK DETAILS

4215162/A 03/2017

NOTES: (continued)

5. Publication IPC-7351 may have alternate designs.
6. Solder mask tolerances between and around signal pads can vary based on board fabrication site.
7. For more information, see Texas Instruments literature number SLMA004 (www.ti.com/lit/slma004).

Copyright © 2025 Texas Instruments Incorporated

EXAMPLE STENCIL DESIGN

PM0064A

LQFP - 1.6 mm max height

PLASTIC QUAD FLATPACK

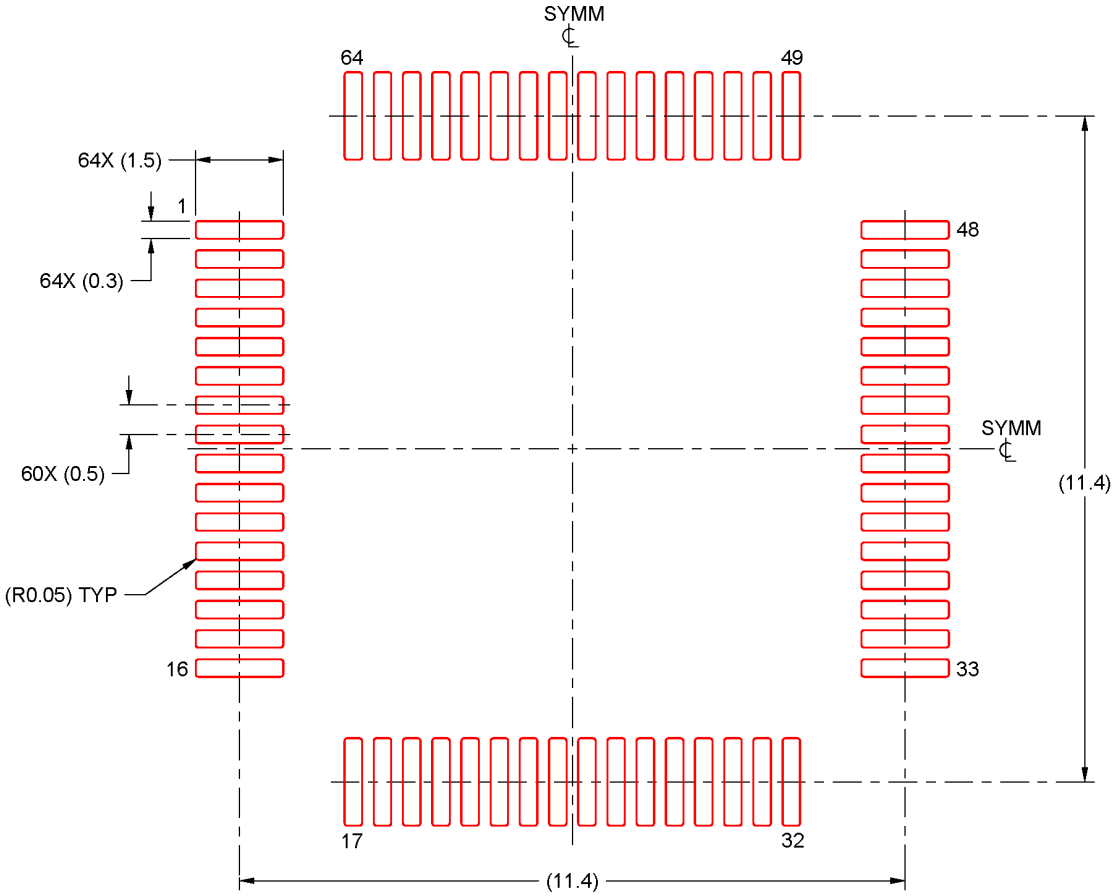

SOLDER PASTE EXAMPLE
BASED ON 0.125 mm THICK STENCIL
SCALE:8X

4215162/A 03/2017

NOTES: (continued)

8. Laser cutting apertures with trapezoidal walls and rounded corners may offer better paste release. IPC-7525 may have alternate design recommendations.
9. Board assembly site may have different recommendations for stencil design.

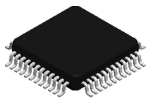

PACKAGE OUTLINE

PT0048A

LQFP - 1.6 mm max height

LOW PROFILE QUAD FLATPACK

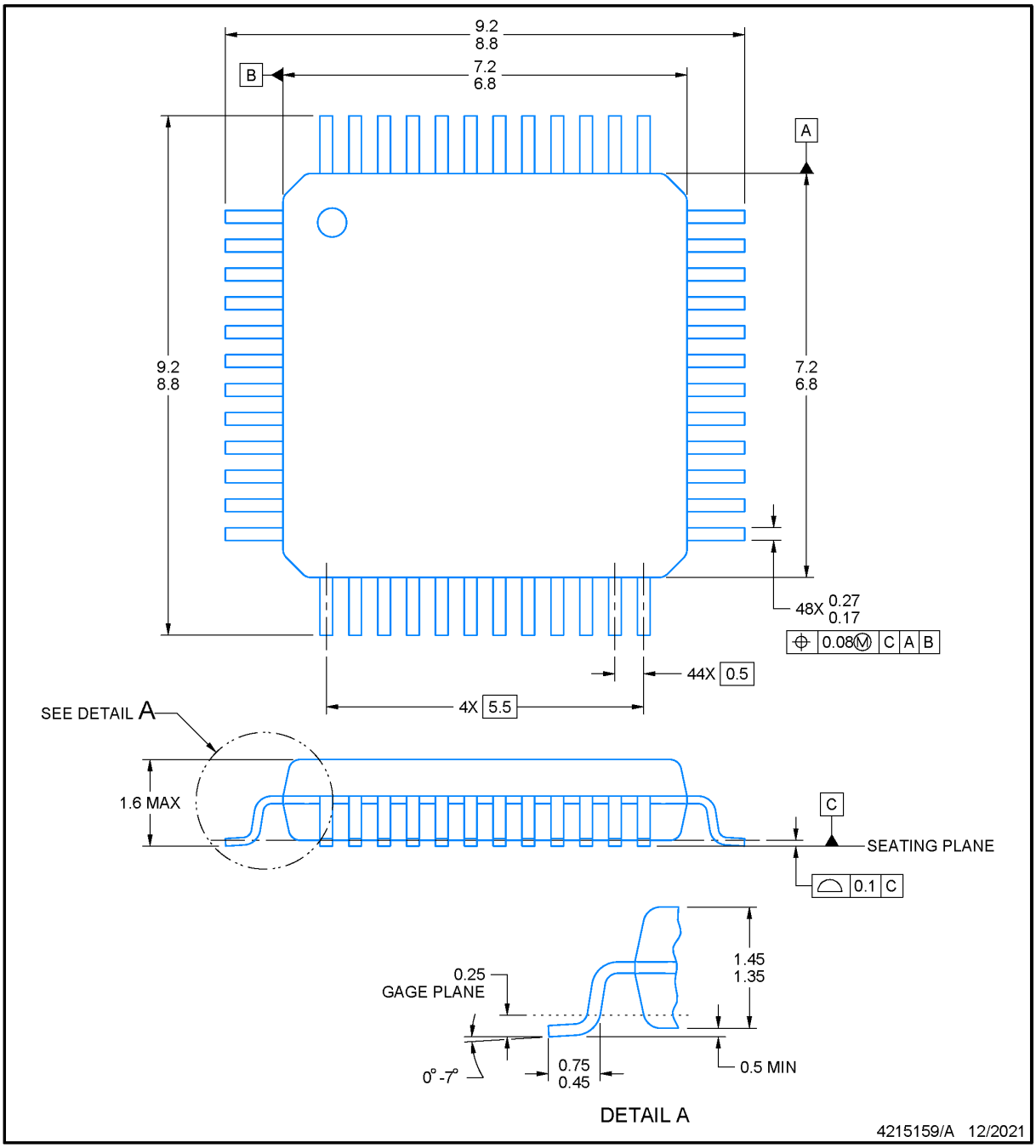

NOTES:

1. All linear dimensions are in millimeters. Any dimensions in parenthesis are for reference only. Dimensioning and tolerancing per ASME Y14.5M.
2. This drawing is subject to change without notice.
3. Reference JEDEC registration MS-026.
4. This may also be a thermally enhanced plastic package with leads conected to the die pads.

Copyright © 2025 Texas Instruments Incorporated

EXAMPLE BOARD LAYOUT

PT0048A

LQFP - 1.6 mm max height

LOW PROFILE QUAD FLATPACK

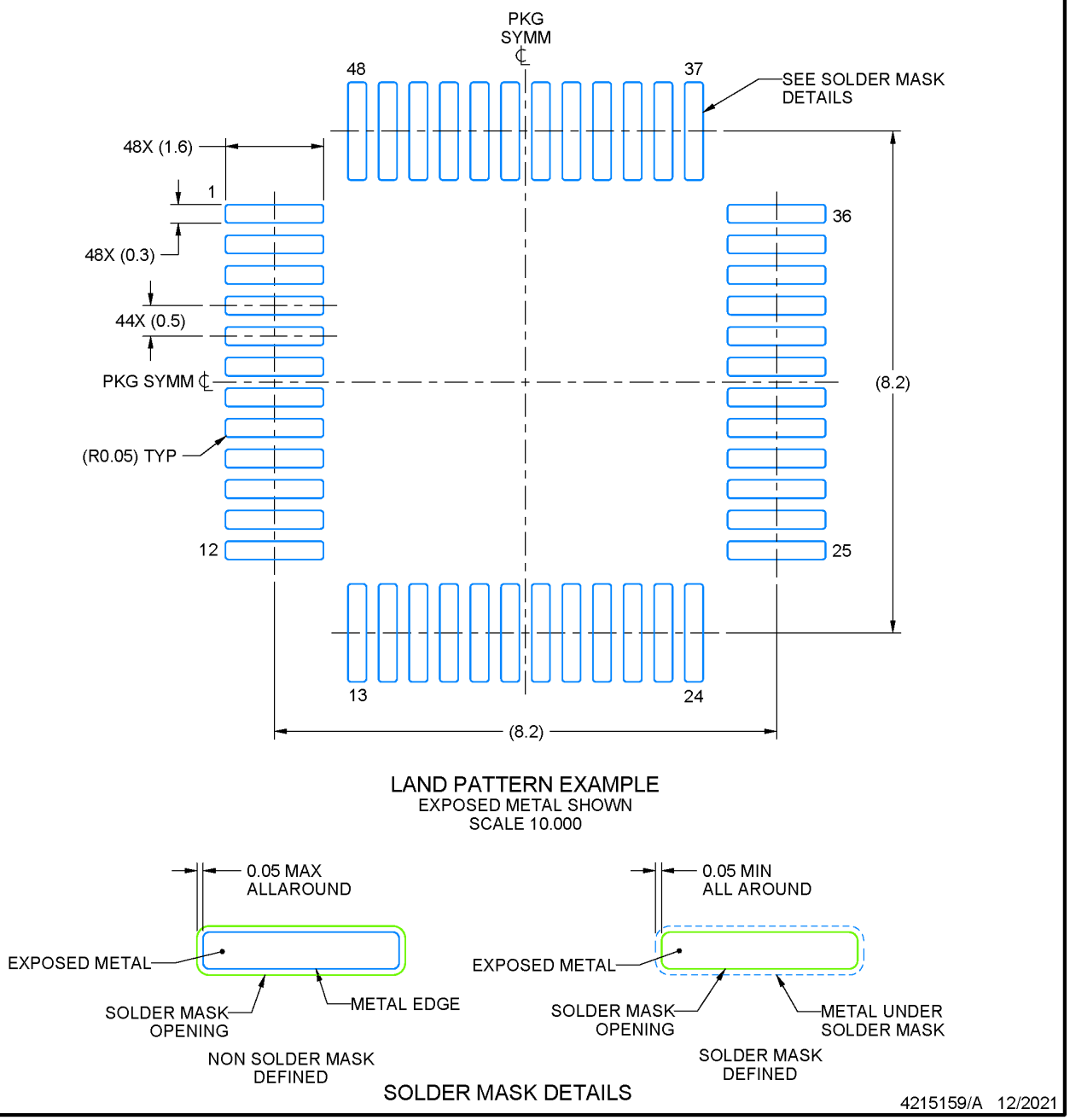

NOTES: (continued)

5. Publication IPC-7351 may have alternate designs.
6. Solder mask tolerances between and around signal pads can vary based on board fabrication site.

EXAMPLE STENCIL DESIGN

PT0048A

LQFP - 1.6 mm max height

LOW PROFILE QUAD FLATPACK

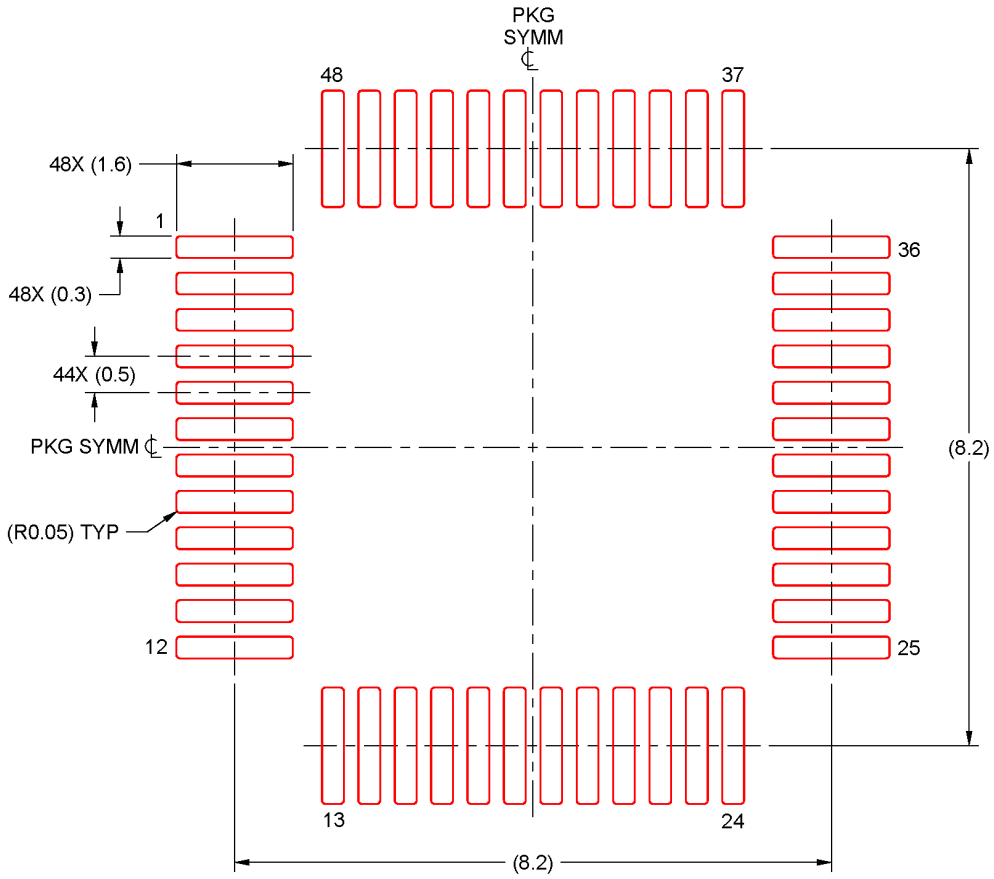

SOLDER PASTE EXAMPLE
BASED ON 0.1 mm THICK STENCIL
SCALE: 10X

4215159/A 12/2021

NOTES: (continued)

7. Laser cutting apertures with trapezoidal walls and rounded corners may offer better paste release. IPC-7525 may have alternate design recommendations.
8. Board assembly site may have different recommendations for stencil design.

Copyright © 2025 Texas Instruments Incorporated

RGZ0048B

PACKAGE OUTLINE

VQFN - 1 mm max height

PLASTIC QUAD FLATPACK - NO LEAD

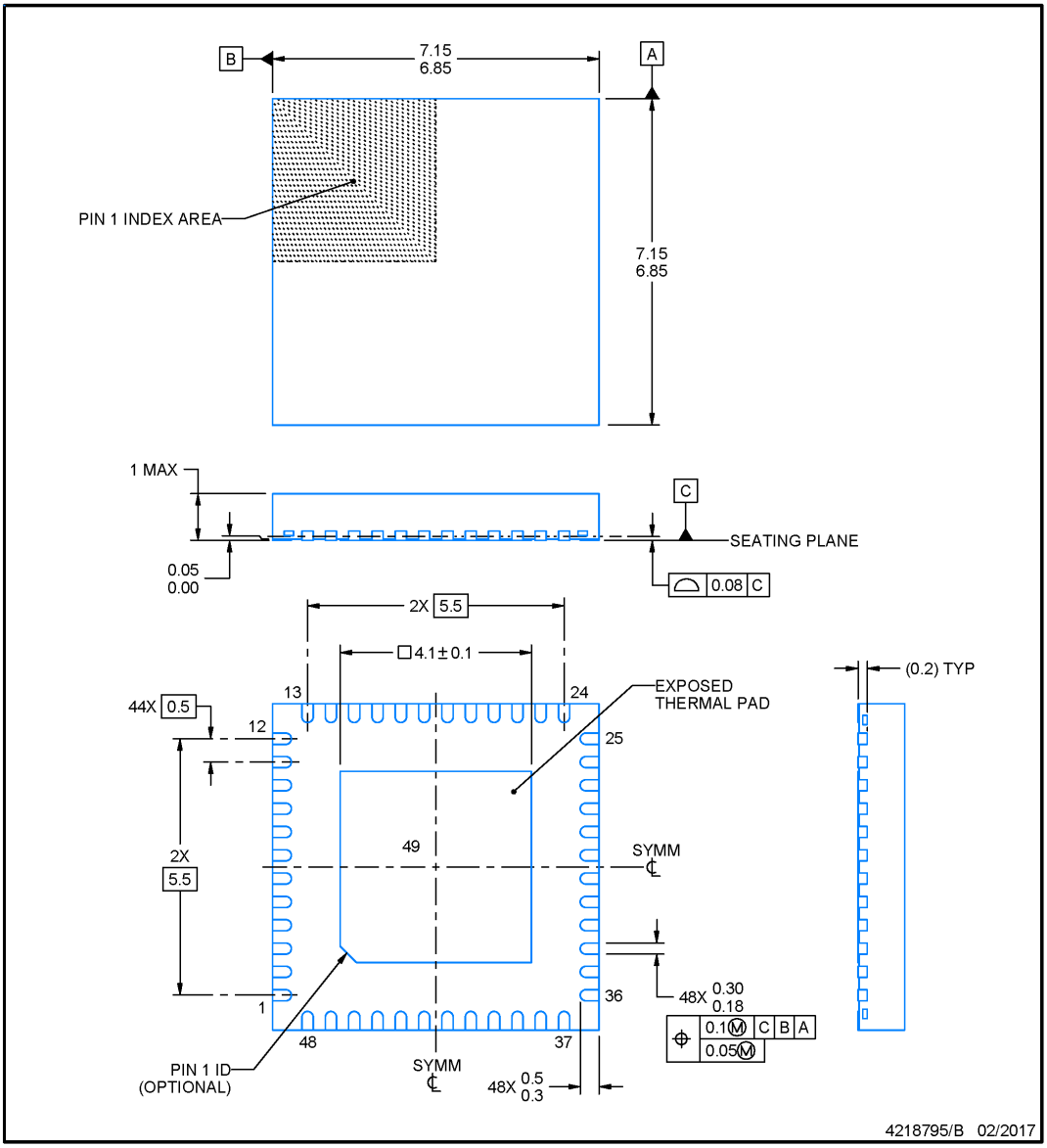

NOTES:

1. All linear dimensions are in millimeters. Any dimensions in parenthesis are for reference only. Dimensioning and tolerancing per ASME Y14.5M.
2. This drawing is subject to change without notice.
3. The package thermal pad must be soldered to the printed circuit board for thermal and mechanical performance.

Copyright © 2025 Texas Instruments Incorporated

EXAMPLE BOARD LAYOUT

RGZ0048B — **VQFN - 1 mm max height**

PLASTIC QUAD FLATPACK - NO LEAD

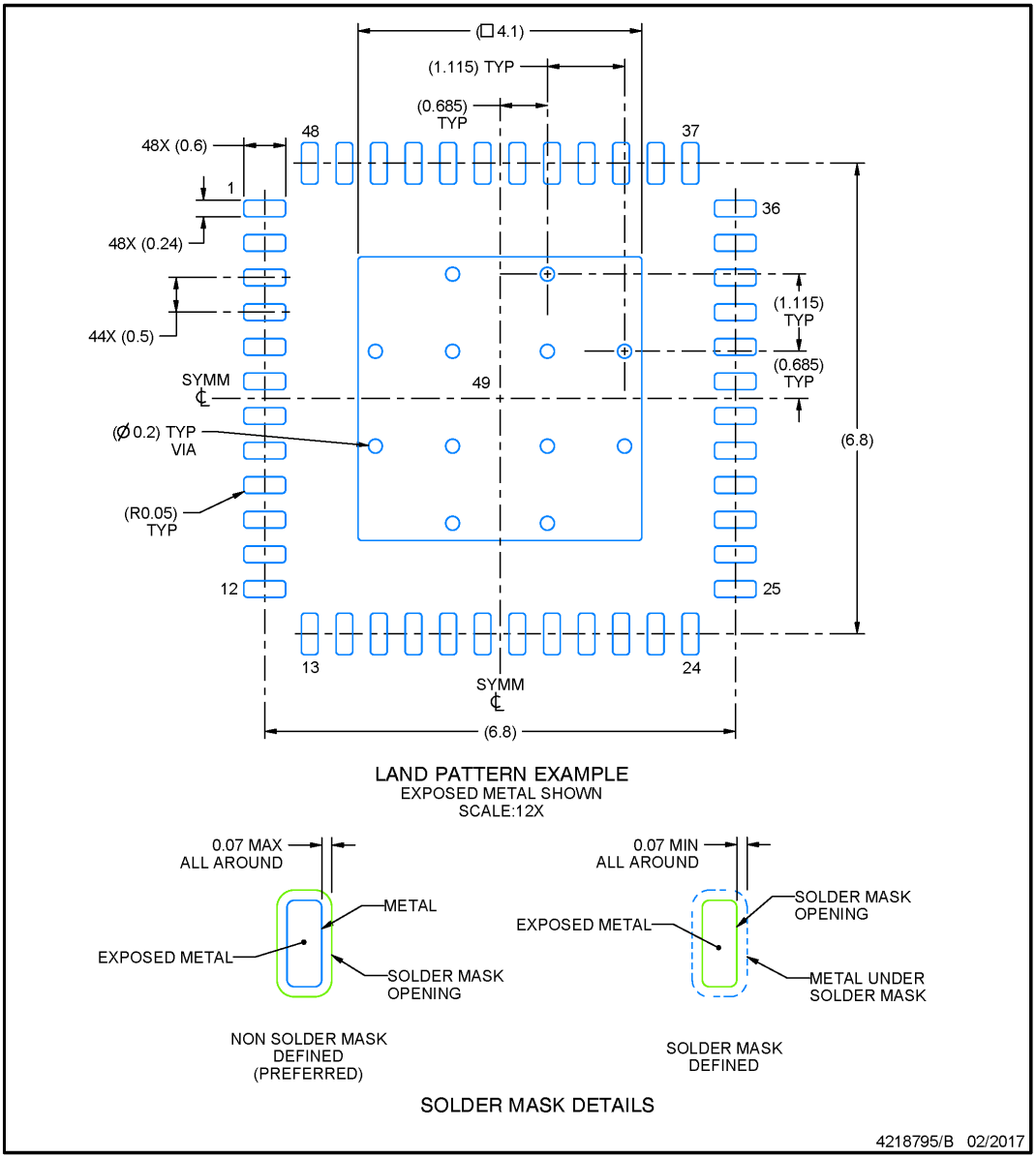

NOTES: (continued)

4. This package is designed to be soldered to a thermal pad on the board. For more information, see Texas Instruments literature number SLUA271 (www.ti.com/lit/slua271).
5. Vias are optional depending on application, refer to device data sheet. If any vias are implemented, refer to their locations shown on this view. It is recommended that vias under paste be filled, plugged or tented.

Copyright © 2025 Texas Instruments Incorporated

EXAMPLE STENCIL DESIGN

RGZ0048B **VQFN - 1 mm max height**

PLASTIC QUAD FLATPACK - NO LEAD

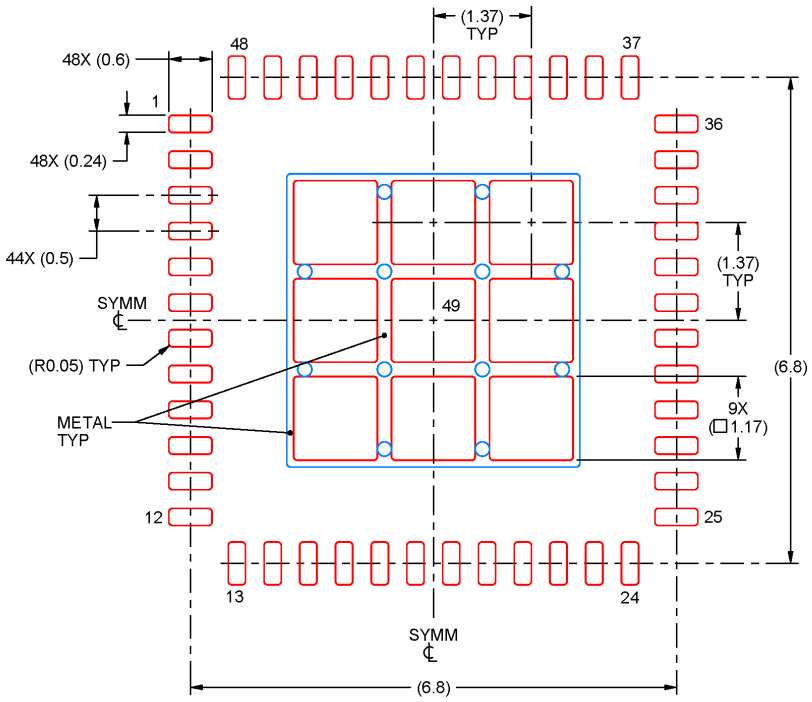

SOLDER PASTE EXAMPLE
BASED ON 0.125 mm THICK STENCIL

EXPOSED PAD 49
73% PRINTED SOLDER COVERAGE BY AREA UNDER PACKAGE
SCALE:12X

4218795/B 02/2017

NOTES: (continued)

6. Laser cutting apertures with trapezoidal walls and rounded corners may offer better paste release. IPC-7525 may have alternate design recommendations.

Copyright © 2025 Texas Instruments Incorporated

RHB0032E

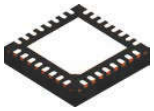

PACKAGE OUTLINE

VQFN - 1 mm max height

PLASTIC QUAD FLATPACK - NO LEAD

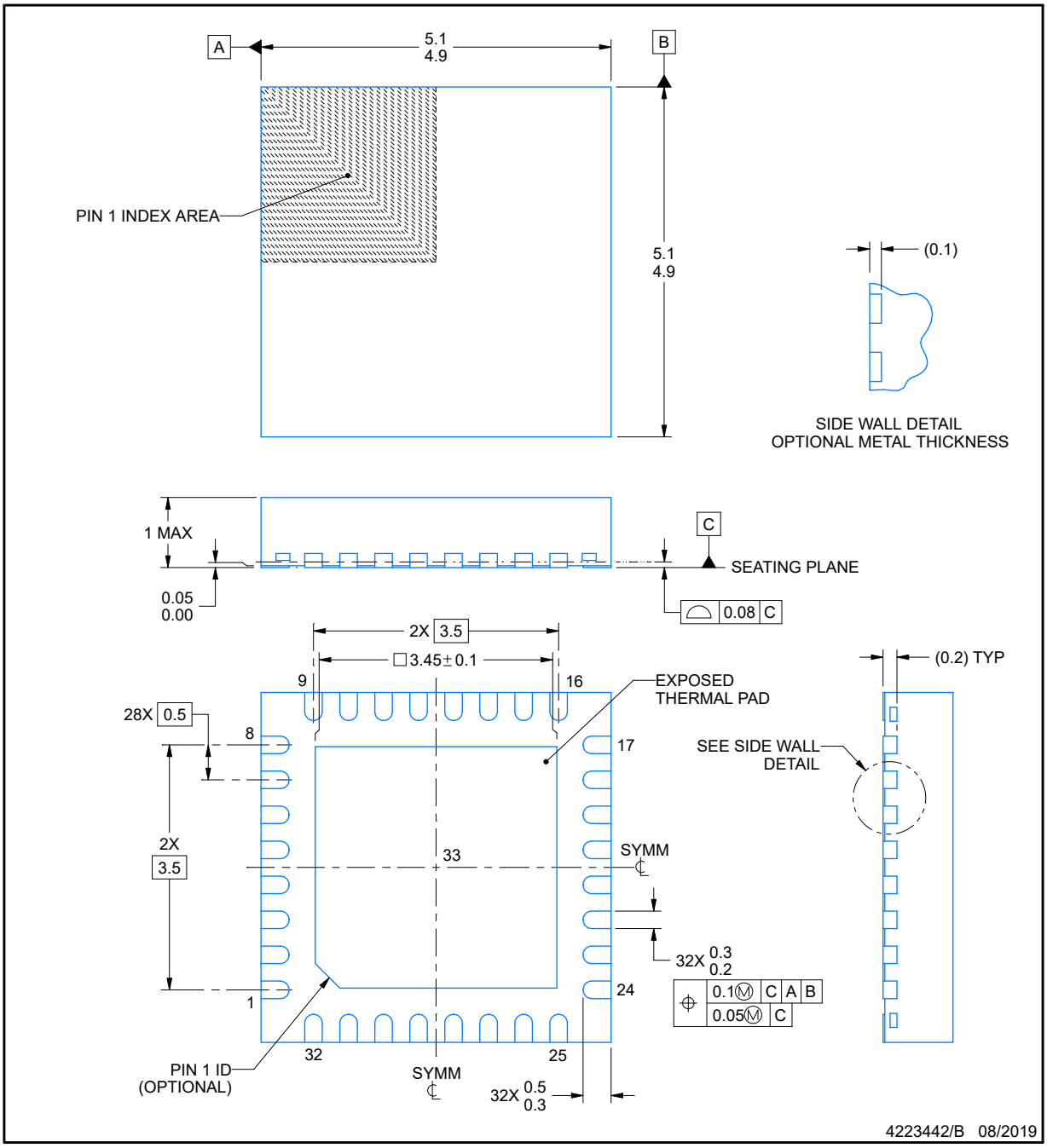

NOTES:

1. All linear dimensions are in millimeters. Any dimensions in parenthesis are for reference only. Dimensioning and tolerancing per ASME Y14.5M.
2. This drawing is subject to change without notice.
3. The package thermal pad must be soldered to the printed circuit board for thermal and mechanical performance.

Copyright © 2025 Texas Instruments Incorporated

EXAMPLE BOARD LAYOUT

RHB0032E

VQFN - 1 mm max height

PLASTIC QUAD FLATPACK - NO LEAD

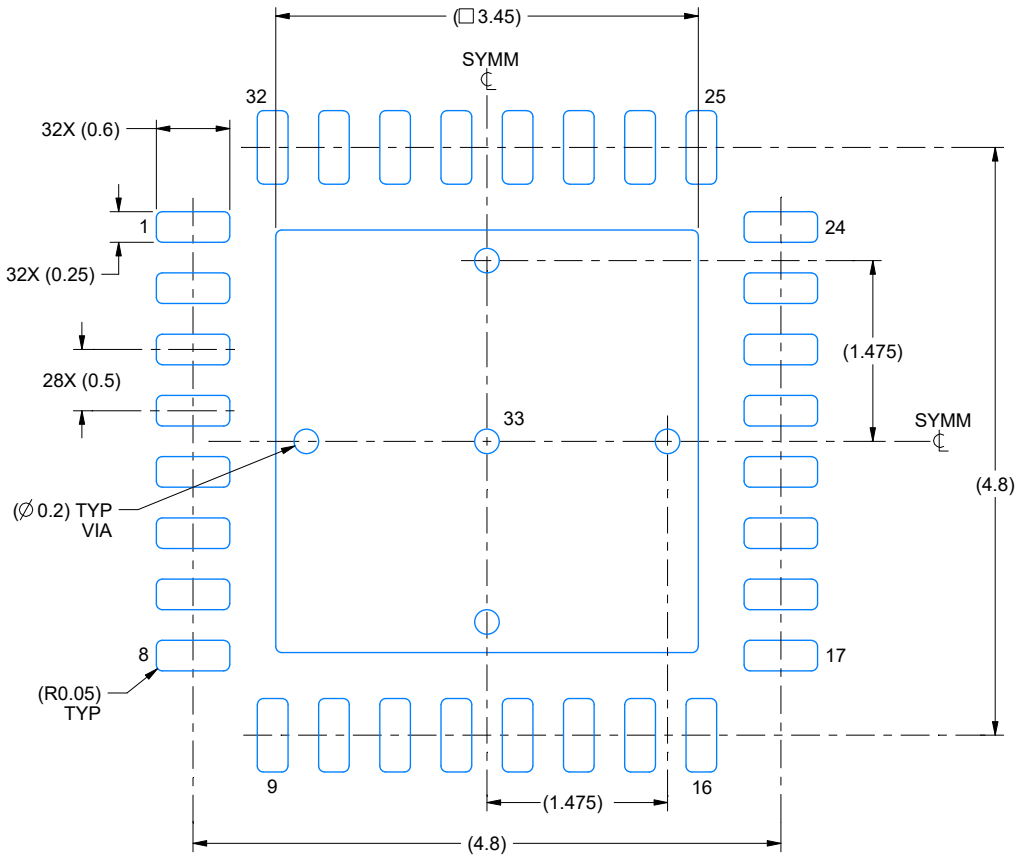

LAND PATTERN EXAMPLE
SCALE:18X

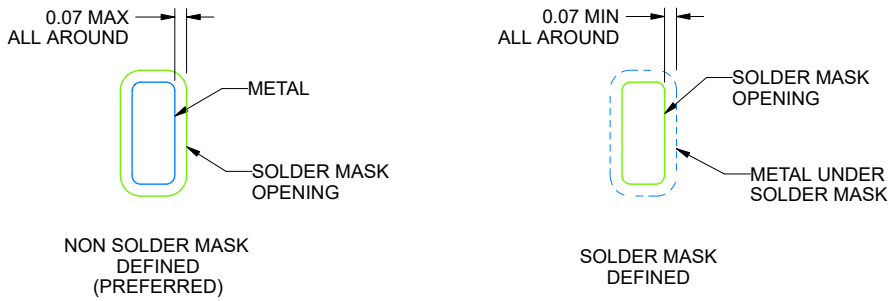

SOLDER MASK DETAILS

4223442/B 08/2019

NOTES: (continued)

4. This package is designed to be soldered to a thermal pad on the board. For more information, see Texas Instruments literature number SLUA271 (www.ti.com/lit/slua271).
5. Vias are optional depending on application, refer to device data sheet. If any vias are implemented, refer to their locations shown on this view. It is recommended that vias under paste be filled, plugged or tented.

EXAMPLE STENCIL DESIGN

RHB0032E

VQFN - 1 mm max height

PLASTIC QUAD FLATPACK - NO LEAD

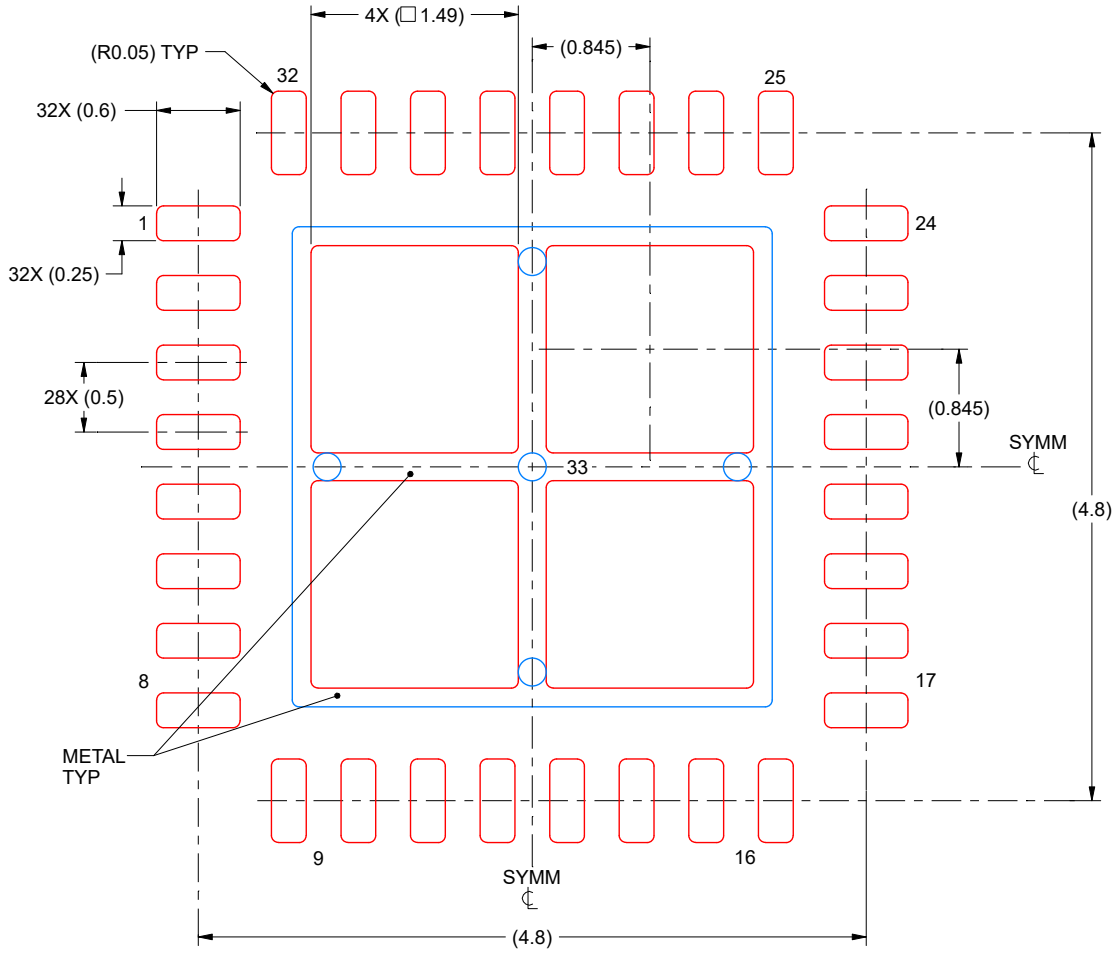

SOLDER PASTE EXAMPLE
BASED ON 0.125 mm THICK STENCIL

EXPOSED PAD 33:
75% PRINTED SOLDER COVERAGE BY AREA UNDER PACKAGE
SCALE:20X

4223442/B 08/2019

NOTES: (continued)

6. Laser cutting apertures with trapezoidal walls and rounded corners may offer better paste release. IPC-7525 may have alternate design recommendations.

Copyright © 2025 Texas Instruments Incorporated

PACKAGE OUTLINE

RUY0028A

WQFN - 0.8 mm max height

PLASTIC QUAD FLATPACK-NO LEAD

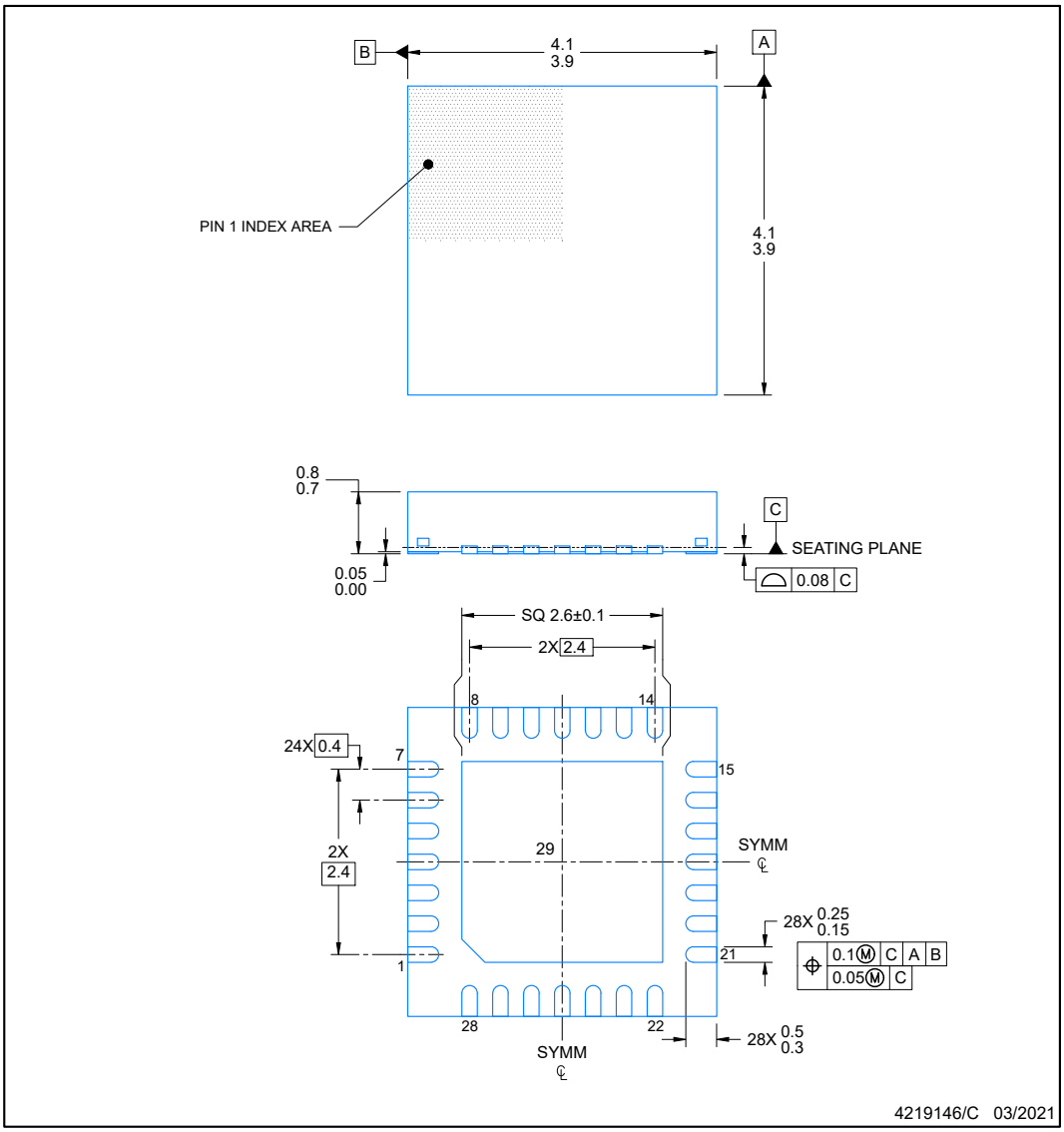

NOTES:

1. All linear dimensions are in millimeters. Any dimensions in parenthesis are for reference only. Dimensioning and tolerancing per ASME Y14.5M.
2. This drawing is subject to change without notice.
3. The package thermal pad must be soldered to the printed circuit board for optimal thermal and mechanical performance.

Copyright © 2025 Texas Instruments Incorporated

EXAMPLE BOARD LAYOUT

RUY0028A — **WQFN - 0.8 mm max height**

PLASTIC QUAD FLATPACK-NO LEAD

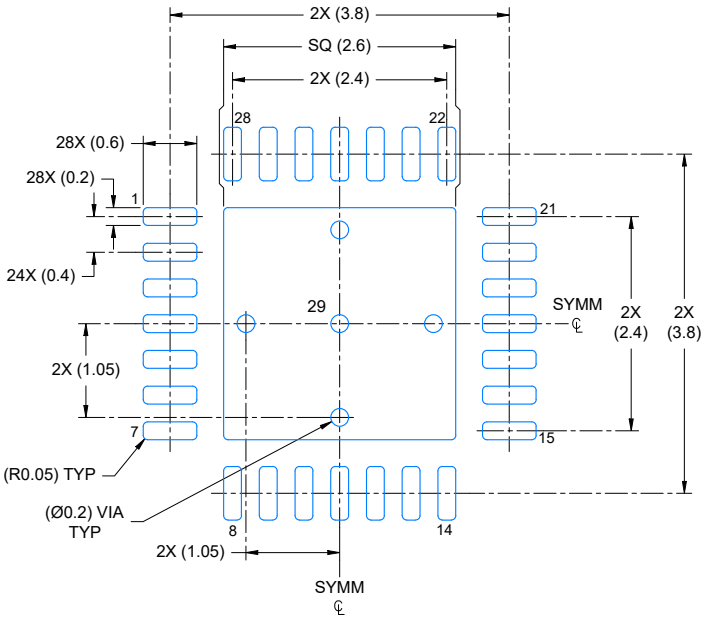

LAND PATTERN EXAMPLE
EXPOSED METAL SHOWN
SCALE: 15X

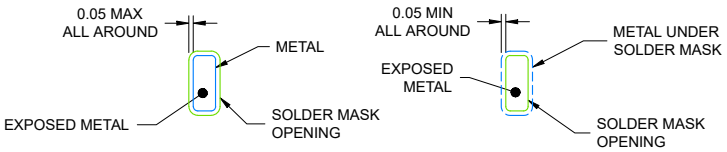

NON SOLDER MASK DEFINED (PREFERRED) — SOLDER MASK DEFINED

SOLDER MASK DETAILS

4219146/C 03/2021

NOTES: (continued)

4. This package is designed to be soldered to a thermal pad on the board. For more information, see Texas Instruments literature number SLUA271 (www.ti.com/lit/slua271).
5. Vias are optional depending on application, refer to device data sheet. If any vias are implemented, refer to their locations shown on this view. It is recommended that vias under paste be filled, plugged or tented.

Copyright © 2025 Texas Instruments Incorporated

EXAMPLE STENCIL DESIGN

RUY0028A **WQFN - 0.8 mm max height**

PLASTIC QUAD FLATPACK-NO LEAD

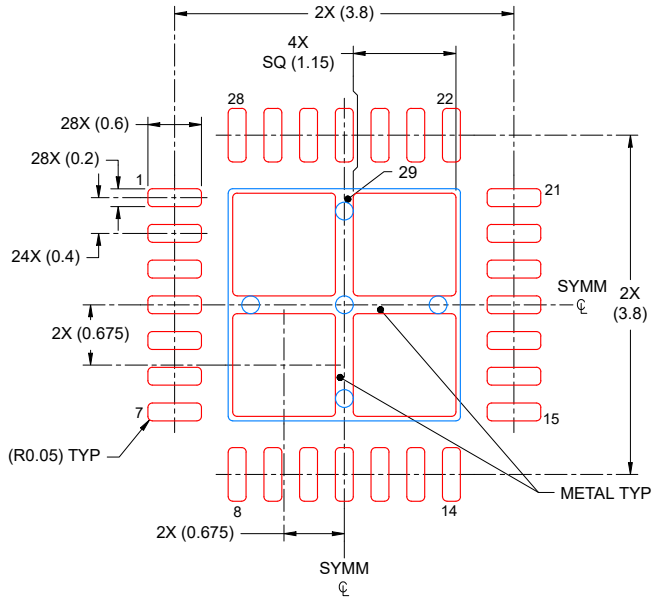

SOLDER PASTE EXAMPLE
BASED ON 0.125 mm THICK STENCIL

EXPOSED PAD
78% PRINTED COVERAGE BY AREA
SCALE: 15X

4219146/C 03/2021

NOTES: (continued)

6. Laser cutting apertures with trapezoidal walls and rounded corners may offer better paste release. IPC-7525 may have alternate design recommendations.

Copyright © 2025 Texas Instruments Incorporated

PACKAGE OUTLINE

RGE0024B

VQFN - 1 mm max height

PLASTIC QUAD FLATPACK - NO LEAD

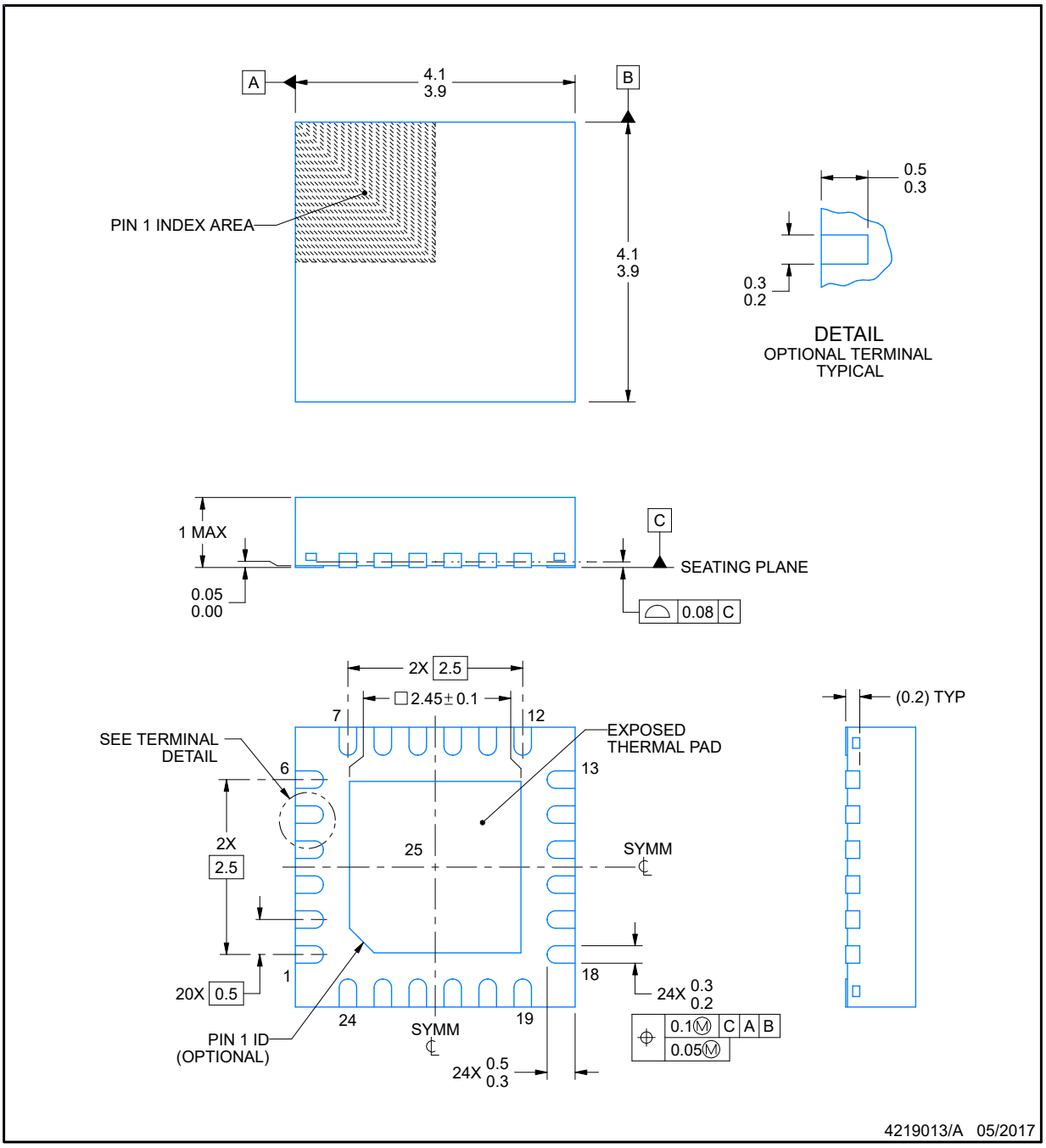

NOTES:

1. All linear dimensions are in millimeters. Any dimensions in parenthesis are for reference only. Dimensioning and tolerancing per ASME Y14.5M.
2. This drawing is subject to change without notice.
3. The package thermal pad must be soldered to the printed circuit board for thermal and mechanical performance.

Copyright © 2025 Texas Instruments Incorporated

EXAMPLE BOARD LAYOUT

RGE0024B

VQFN - 1 mm max height

PLASTIC QUAD FLATPACK - NO LEAD

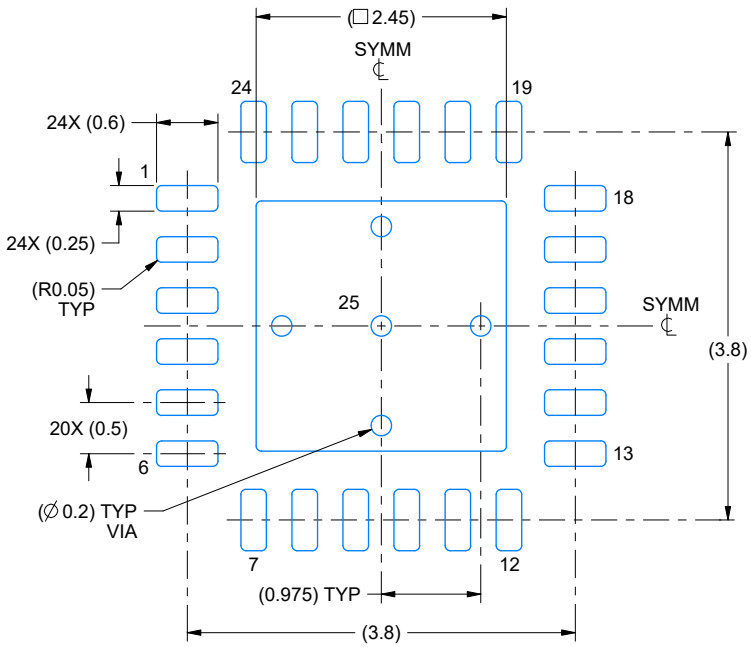

LAND PATTERN EXAMPLE
EXPOSED METAL SHOWN
SCALE:15X

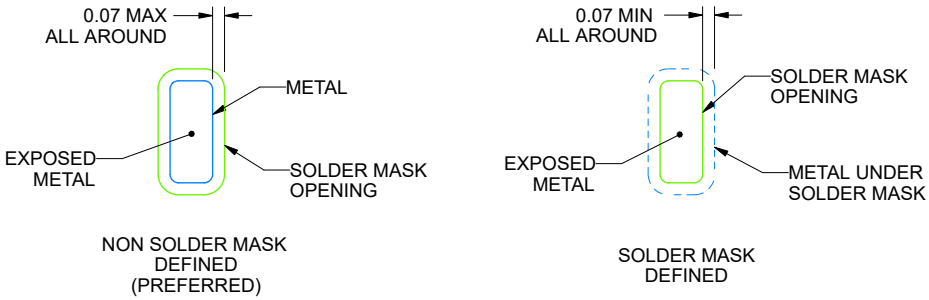

SOLDER MASK DETAILS

4219013/A 05/2017

NOTES: (continued)

4. This package is designed to be soldered to a thermal pad on the board. For more information, see Texas Instruments literature number SLUA271 (www.ti.com/lit/slua271).
5. Vias are optional depending on application, refer to device data sheet. If any vias are implemented, refer to their locations shown on this view. It is recommended that vias under paste be filled, plugged or tented.

EXAMPLE STENCIL DESIGN

RGE0024B

VQFN - 1 mm max height

PLASTIC QUAD FLATPACK - NO LEAD

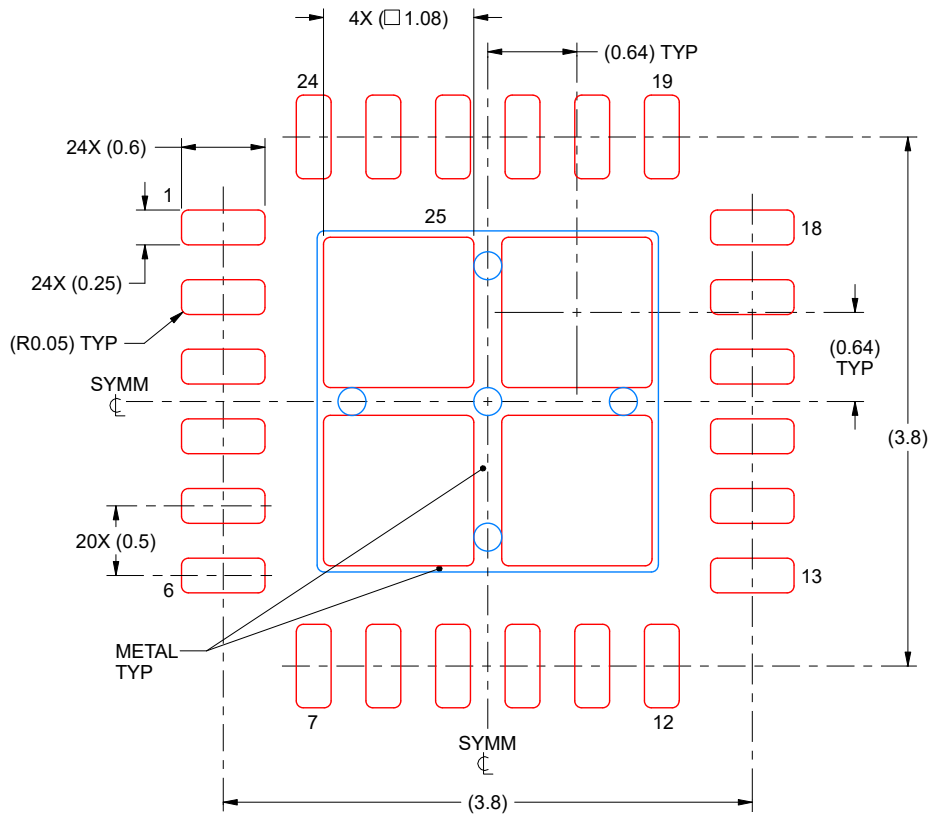

SOLDER PASTE EXAMPLE
BASED ON 0.125 mm THICK STENCIL

EXPOSED PAD 25
78% PRINTED SOLDER COVERAGE BY AREA UNDER PACKAGE
SCALE:20X

4219013/A 05/2017

NOTES: (continued)

6. Laser cutting apertures with trapezoidal walls and rounded corners may offer better paste release. IPC-7525 may have alternate design recommendations.

Copyright © 2025 Texas Instruments Incorporated

PACKAGE OUTLINE

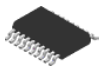

DGS0020A

VSSOP - 1.1 mm max height

SMALL OUTLINE PACKAGE

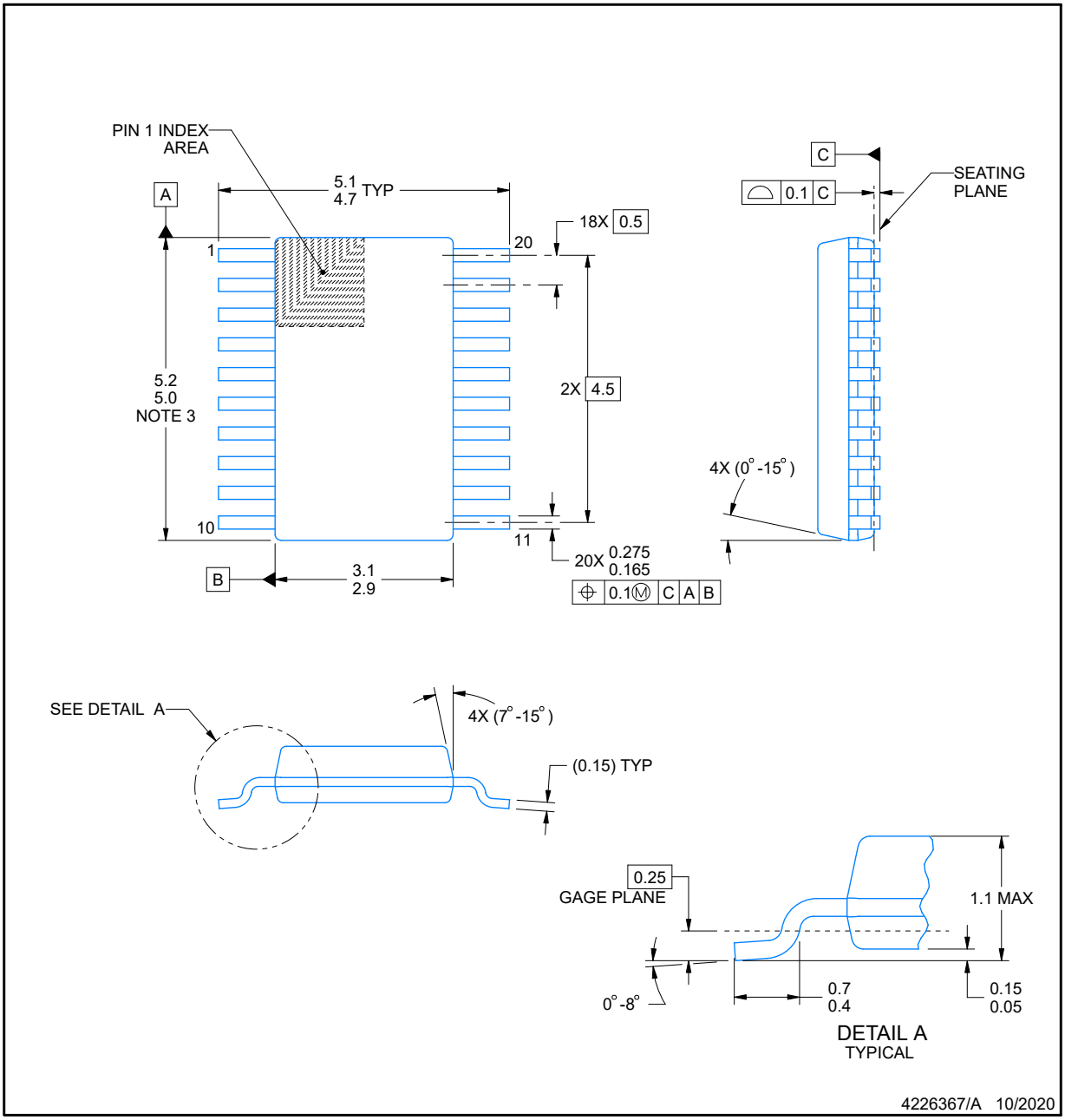

PowerPAD is a trademark of Texas Instruments.

NOTES:

1. All linear dimensions are in millimeters. Any dimensions in parenthesis are for reference only. Dimensioning and tolerancing per ASME Y14.5M.
2. This drawing is subject to change without notice.
3. This dimension does not include mold flash, protrusions, or gate burrs. Mold flash, protrusions, or gate burrs shall not exceed 0.15 mm per side.
4. No JEDEC registration as of September 2020.
5. Features may differ or may not be present.

EXAMPLE BOARD LAYOUT

DGS0020A

VSSOP - 1.1 mm max height

SMALL OUTLINE PACKAGE

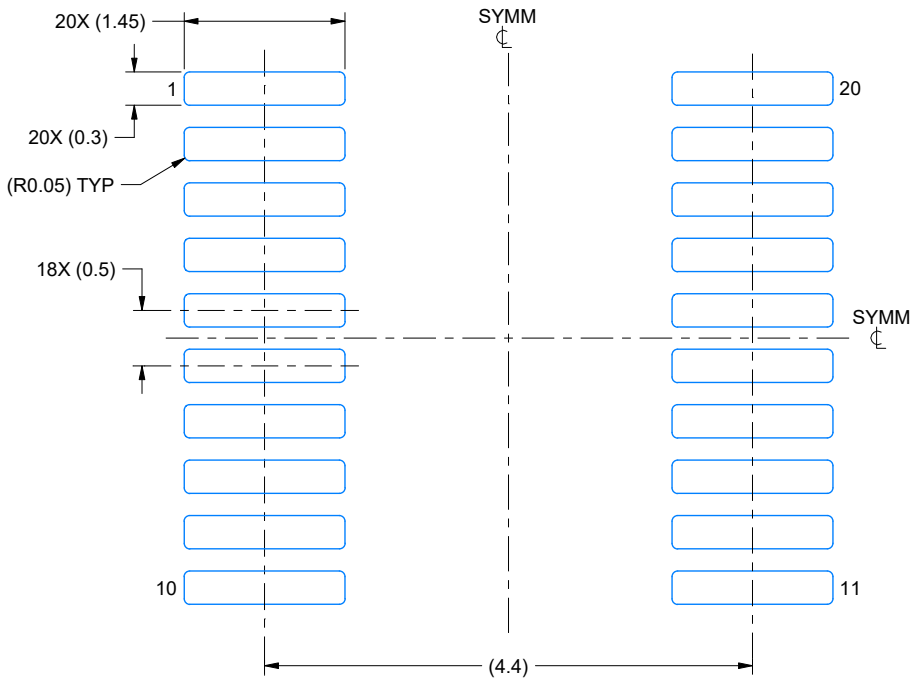

LAND PATTERN EXAMPLE
SCALE: 16X

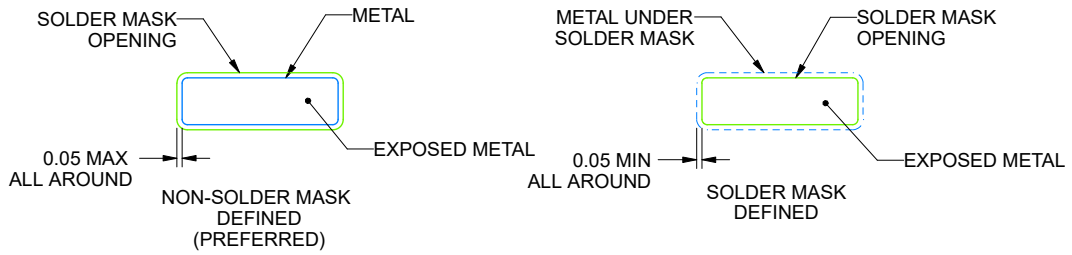

SOLDER MASK DETAILS

4226367/A 10/2020

NOTES: (continued)

6. Publication IPC-7351 may have alternate designs.
7. Solder mask tolerances between and around signal pads can vary based on board fabrication site.
8. This package is designed to be soldered to a thermal pad on the board. For more information, see Texas Instruments literature numbers SLMA002 (www.ti.com/lit/slma002) and SLMA004 (www.ti.com/lit/slma004).
9. Size of metal pad may vary due to creepage requirement.
10. Vias are optional depending on application, refer to device data sheet. It is recommended that vias under paste be filled, plugged or tented.

Copyright © 2025 Texas Instruments Incorporated

EXAMPLE STENCIL DESIGN

DGS0020A

VSSOP - 1.1 mm max height

SMALL OUTLINE PACKAGE

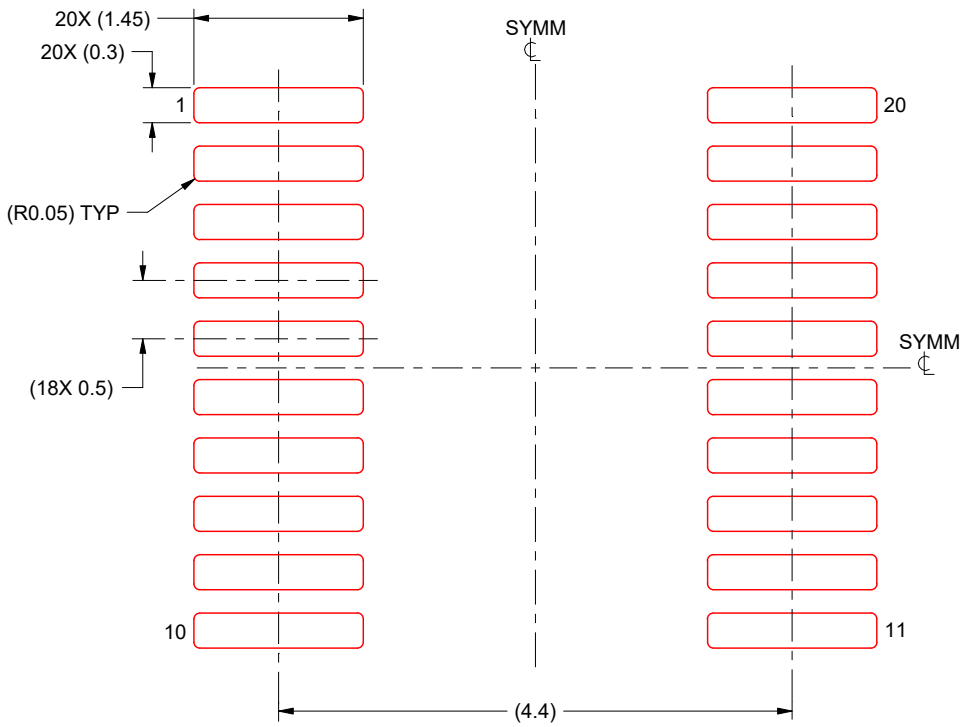

SOLDER PASTE EXAMPLE
BASED ON 0.125 mm THICK STENCIL
SCALE: 16X

4226367/A 10/2020

NOTES: (continued)

11. Laser cutting apertures with trapezoidal walls and rounded corners may offer better paste release. IPC-7525 may have alternate design recommendations.
12. Board assembly site may have different recommendations for stencil design.

PACKAGING INFORMATION

Orderable part number	Status (1)	Material type (2)	Package | Pins	Package qty | Carrier	RoHS (3)	Lead finish/ Ball material (4)	MSL rating/ Peak reflow (5)	Op temp (°C)	Part marking (6)
MSPM0G5115SPMR	Active	Production	LQFP (PM) | 64	1000 | LARGE T&R	Yes	NIPDAU	Level-2-260C-1 YEAR	-40 to 125	M0G5115S
MSPM0G5115SRGER	Active	Production	VQFN (RGE) | 24	5000 | LARGE T&R	Yes	NIPDAU	Level-1-260C-UNLIM	-40 to 125	MSPM0 G5115S
MSPM0G5115SRGZR	Active	Production	VQFN (RGZ) | 48	4000 | LARGE T&R	Yes	NIPDAU	Level-2-260C-1 YEAR	-40 to 125	MSPM0 G5115S
MSPM0G5115SRHBR	Active	Production	VQFN (RHB) | 32	5000 | LARGE T&R	Yes	NIPDAU	Level-2-260C-1 YEAR	-40 to 125	MSPM0 G5115S
MSPM0G5115SRUYR	Active	Production	WQFN (RUY) | 28	5000 | LARGE T&R	Yes	NIPDAU	Level-1-260C-UNLIM	-40 to 125	MSPM0 G5115S
MSPM0G5116SDGS20R	Active	Production	VSSOP (DGS) | 20	5000 | LARGE T&R	Yes	NIPDAU	Level-2-260C-1 YEAR	-40 to 125	5116S
MSPM0G5116SPMR	Active	Production	LQFP (PM) | 64	1000 | LARGE T&R	Yes	NIPDAU	Level-2-260C-1 YEAR	-40 to 125	M0G5116S
MSPM0G5116SPTR	Active	Production	LQFP (PT) | 48	1000 | LARGE T&R	Yes	NIPDAU	Level-2-260C-1 YEAR	-40 to 125	M0G5116S
MSPM0G5116SRGER	Active	Production	VQFN (RGE) | 24	5000 | LARGE T&R	Yes	NIPDAU	Level-1-260C-UNLIM	-40 to 125	MSPM0 G5116S
MSPM0G5116SRGZR	Active	Production	VQFN (RGZ) | 48	4000 | LARGE T&R	Yes	NIPDAU	Level-2-260C-1 YEAR	-40 to 125	MSPM0 G5116S
MSPM0G5116SRHBR	Active	Production	VQFN (RHB) | 32	5000 | LARGE T&R	Yes	NIPDAU	Level-2-260C-1 YEAR	-40 to 125	MSPM0 G5116S
MSPM0G5116SRUYR	Active	Production	WQFN (RUY) | 28	5000 | LARGE T&R	Yes	NIPDAU	Level-1-260C-UNLIM	-40 to 125	MSPM0 G5116S
MSPM0G5117SDGS20R	Active	Production	VSSOP (DGS) | 20	5000 | LARGE T&R	Yes	NIPDAU	Level-2-260C-1 YEAR	-40 to 125	5117S
MSPM0G5117SPMR	Active	Production	LQFP (PM) | 64	1000 | LARGE T&R	Yes	NIPDAU	Level-2-260C-1 YEAR	-40 to 125	M0G5117S
MSPM0G5117SPTR	Active	Production	LQFP (PT) | 48	1000 | LARGE T&R	Yes	NIPDAU	Level-2-260C-1 YEAR	-40 to 125	M0G5117S
MSPM0G5117SRGER	Active	Production	VQFN (RGE) | 24	5000 | LARGE T&R	Yes	NIPDAU	Level-1-260C-UNLIM	-40 to 125	MSPM0 G5117S
MSPM0G5117SRGZR	Active	Production	VQFN (RGZ) | 48	4000 | LARGE T&R	Yes	NIPDAU	Level-2-260C-1 YEAR	-40 to 125	MSPM0 G5117S
MSPM0G5117SRHBR	Active	Production	VQFN (RHB) | 32	5000 | LARGE T&R	Yes	NIPDAU	Level-2-260C-1 YEAR	-40 to 125	MSPM0 G5117S
MSPM0G5117SRUYR	Active	Production	WQFN (RUY) | 28	5000 | LARGE T&R	Yes	NIPDAU	Level-1-260C-UNLIM	-40 to 125	MSPM0 G5117S

(1) **Status:** For more details on status, see our product life cycle.

(2) **Material type:** When designated, preproduction parts are prototypes/experimental devices, and are not yet approved or released for full production. Testing and final process, including without limitation quality assurance, reliability performance testing, and/or process qualification, may not yet be complete, and this item is subject to further changes or possible discontinuation. If available for ordering, purchases will be subject to an additional waiver at checkout, and are intended for early internal evaluation purposes only. These items are sold without warranties of any kind.

(3) **RoHS values:** Yes, No, RoHS Exempt. See the TI RoHS Statement for additional information and value definition.

(4) **Lead finish/Ball material:** Parts may have multiple material finish options. Finish options are separated by a vertical ruled line. Lead finish/Ball material values may wrap to two lines if the finish value exceeds the maximum column width.

(5) **MSL rating/Peak reflow:** The moisture sensitivity level ratings and peak solder (reflow) temperatures. In the event that a part has multiple moisture sensitivity ratings, only the lowest level per JEDEC standards is shown. Refer to the shipping label for the actual reflow temperature that will be used to mount the part to the printed circuit board.

(6) **Part marking:** There may be an additional marking, which relates to the logo, the lot trace code information, or the environmental category of the part.

Multiple part markings will be inside parentheses. Only one part marking contained in parentheses and separated by a "~" will appear on a part. If a line is indented then it is a continuation of the previous line and the two combined represent the entire part marking for that device.

Important Information and Disclaimer: The information provided on this page represents TI's knowledge and belief as of the date that it is provided. TI bases its knowledge and belief on information provided by third parties, and makes no representation or warranty as to the accuracy of such information. Efforts are underway to better integrate information from third parties. TI has taken and continues to take reasonable steps to provide representative and accurate information but may not have conducted destructive testing or chemical analysis on incoming materials and chemicals. TI and TI suppliers consider certain information to be proprietary, and thus CAS numbers and other limited information may not be available for release.

In no event shall TI's liability arising out of such information exceed the total purchase price of the TI part(s) at issue in this document sold by TI to Customer on an annual basis.

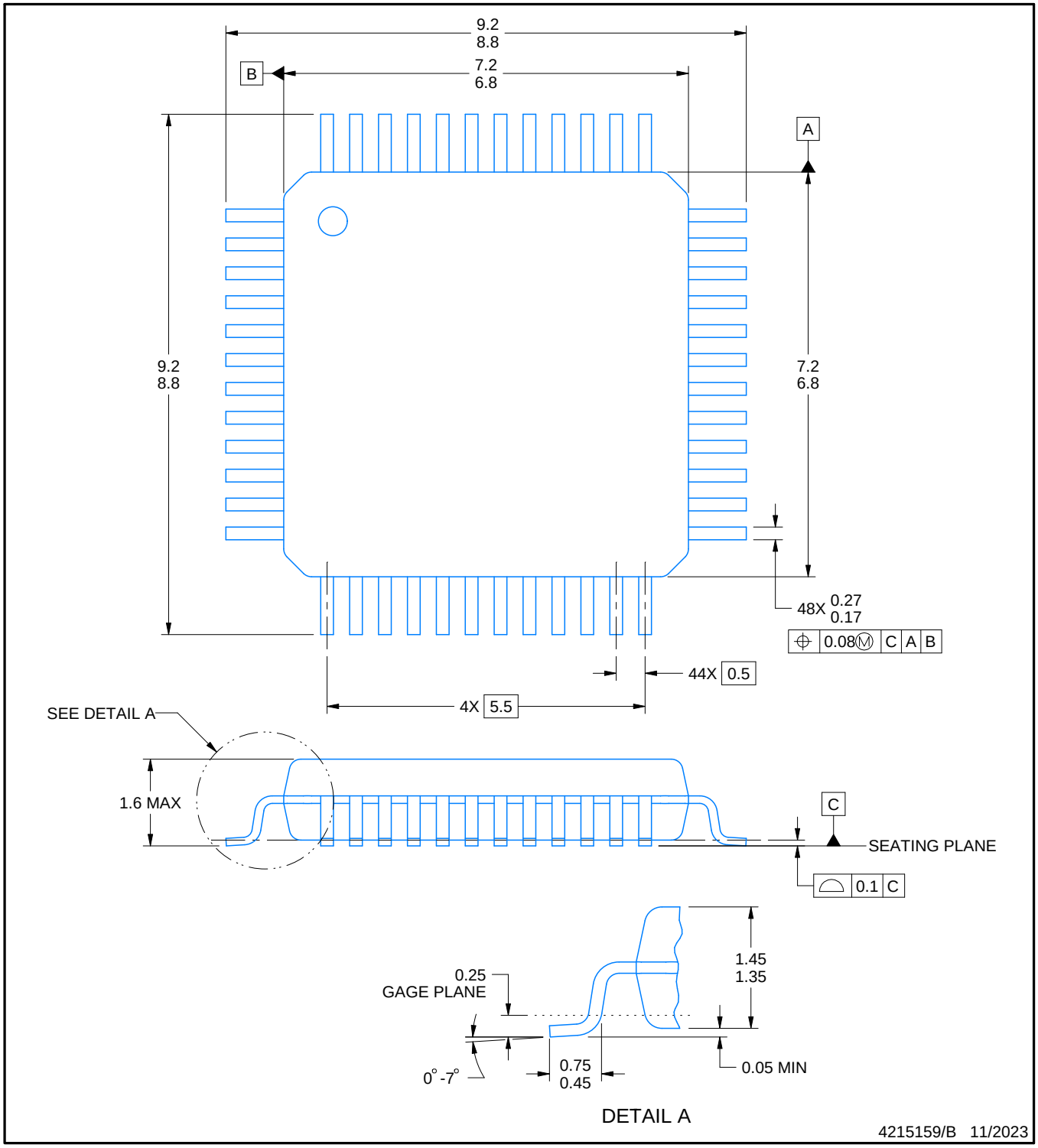

NOTES:

1. All linear dimensions are in millimeters. Any dimensions in parenthesis are for reference only. Dimensioning and tolerancing per ASME Y14.5M.
2. This drawing is subject to change without notice.
3. Reference JEDEC registration MS-026.
4. This may also be a thermally enhanced plastic package with leads conected to the die pads.

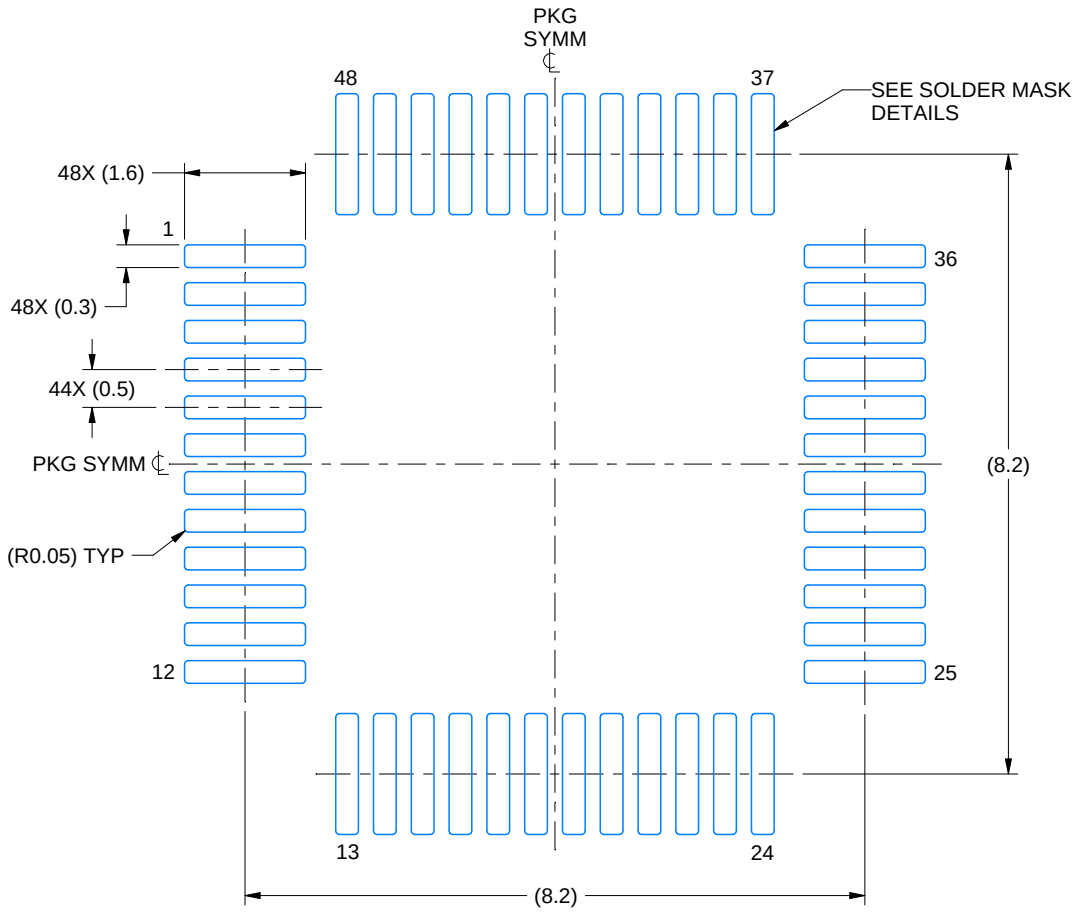

LAND PATTERN EXAMPLE
EXPOSED METAL SHOWN
SCALE 10.000

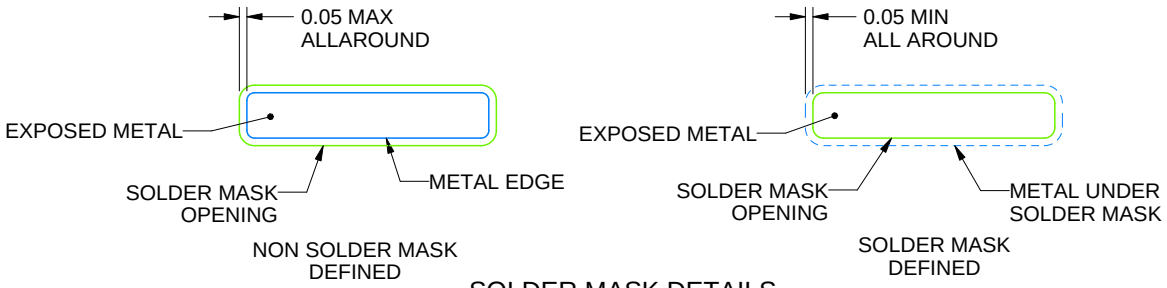

SOLDER MASK DETAILS

4215159/B 11/2023

NOTES: (continued)

5. Publication IPC-7351 may have alternate designs.
6. Solder mask tolerances between and around signal pads can vary based on board fabrication site.

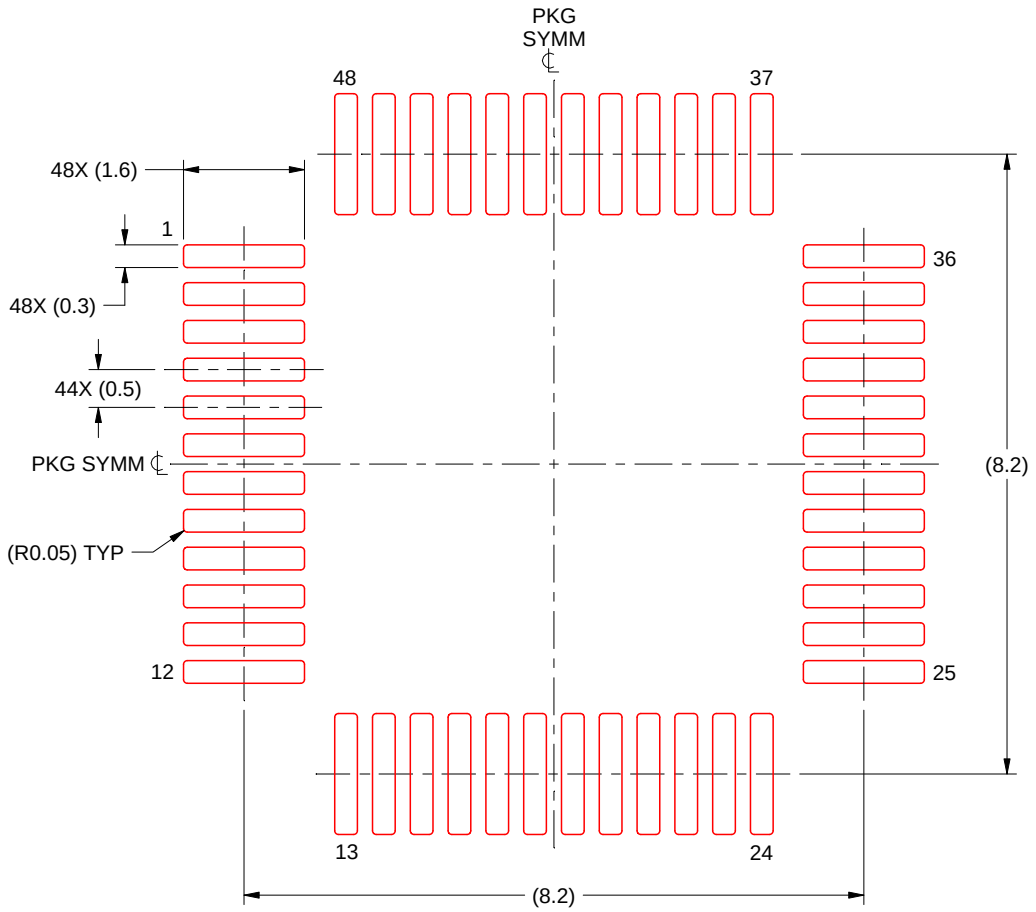

SOLDER PASTE EXAMPLE
BASED ON 0.1 mm THICK STENCIL
SCALE: 10X

4215159/B 11/2023

NOTES: (continued)

7. Laser cutting apertures with trapezoidal walls and rounded corners may offer better paste release. IPC-7525 may have alternate design recommendations.
8. Board assembly site may have different recommendations for stencil design.

RGE 24 VQFN - 1 mm max height

PLASTIC QUAD FLATPACK - NO LEAD

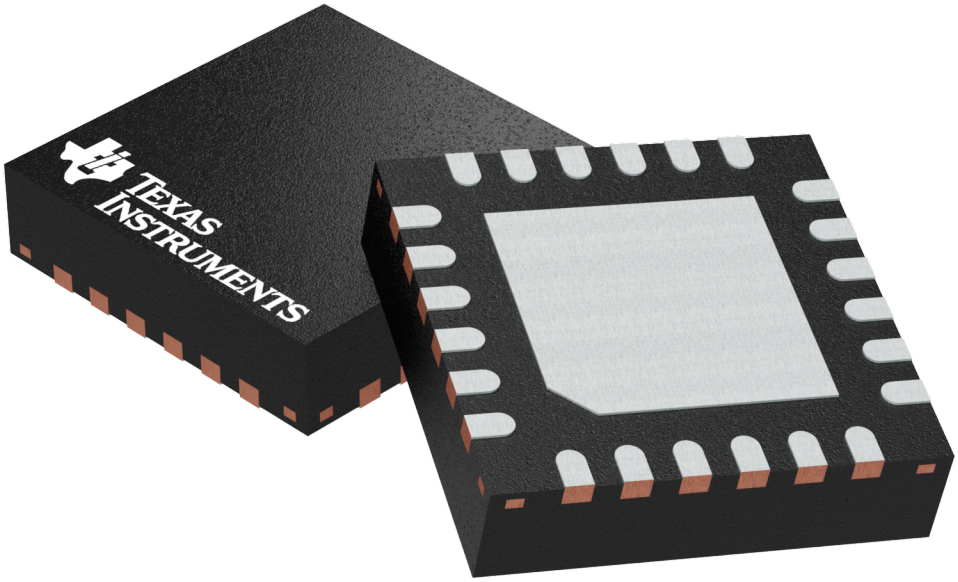

Images above are just a representation of the package family, actual package may vary.
Refer to the product data sheet for package details.

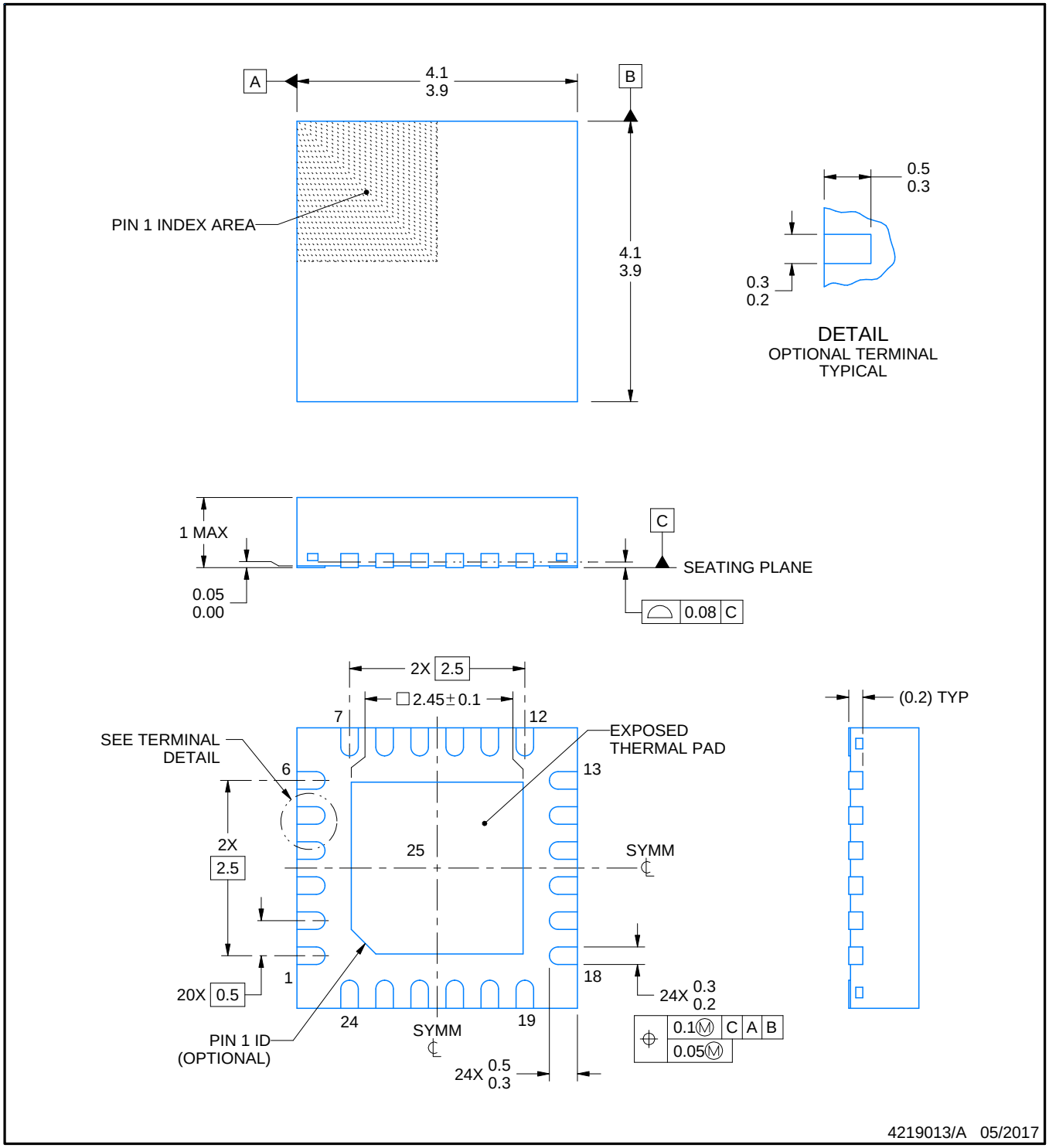

NOTES:

1. All linear dimensions are in millimeters. Any dimensions in parenthesis are for reference only. Dimensioning and tolerancing per ASME Y14.5M.
2. This drawing is subject to change without notice.
3. The package thermal pad must be soldered to the printed circuit board for thermal and mechanical performance.

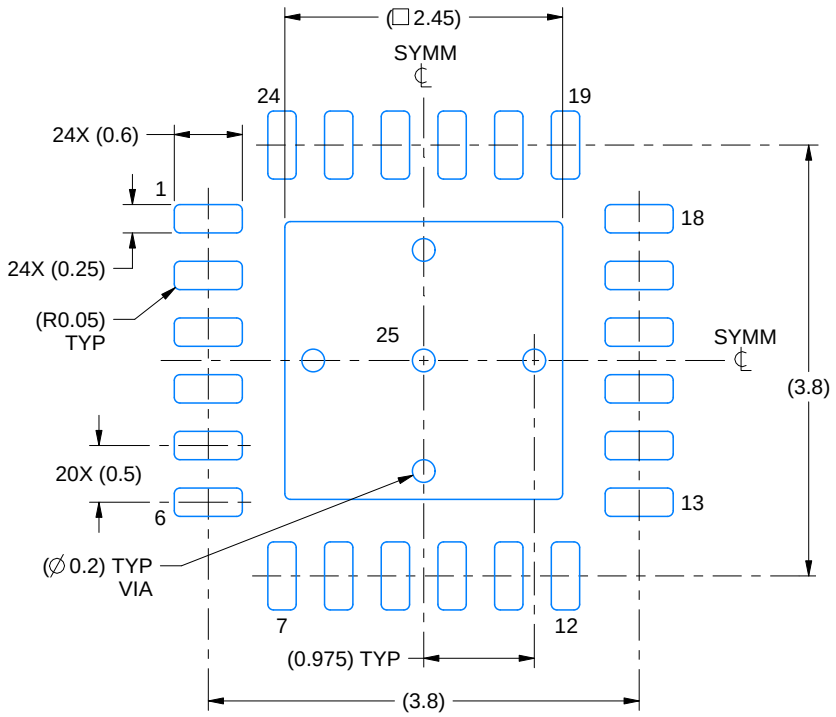

LAND PATTERN EXAMPLE
EXPOSED METAL SHOWN
SCALE:15X

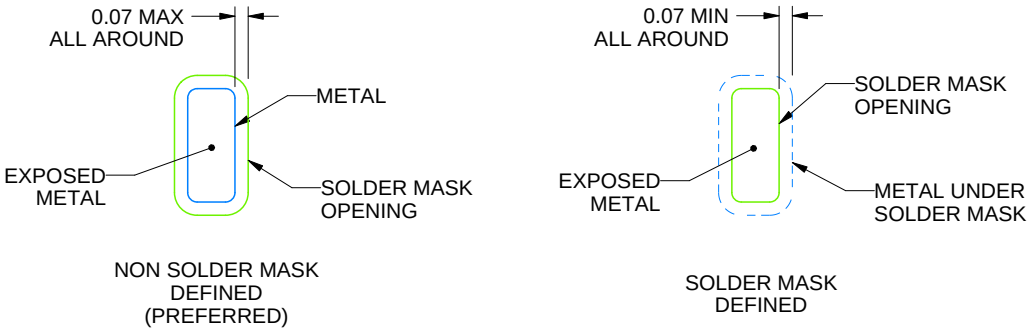

SOLDER MASK DETAILS

4219013/A 05/2017

NOTES: (continued)

4. This package is designed to be soldered to a thermal pad on the board. For more information, see Texas Instruments literature number SLUA271 (www.ti.com/lit/slua271).
5. Vias are optional depending on application, refer to device data sheet. If any vias are implemented, refer to their locations shown on this view. It is recommended that vias under paste be filled, plugged or tented.

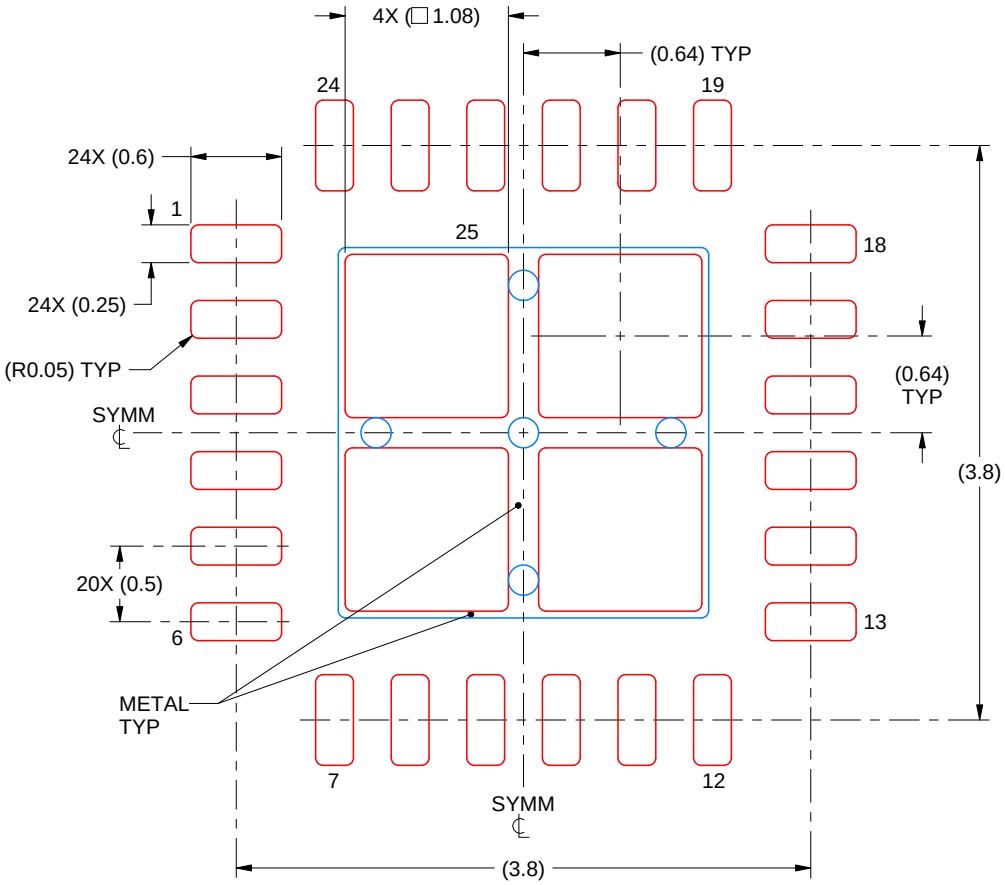

SOLDER PASTE EXAMPLE
BASED ON 0.125 mm THICK STENCIL

EXPOSED PAD 25
78% PRINTED SOLDER COVERAGE BY AREA UNDER PACKAGE
SCALE:20X

4219013/A 05/2017

NOTES: (continued)

6. Laser cutting apertures with trapezoidal walls and rounded corners may offer better paste release. IPC-7525 may have alternate design recommendations.

GENERIC PACKAGE VIEW

RHB 32

VQFN - 1 mm max height

5 x 5, 0.5 mm pitch

PLASTIC QUAD FLATPACK - NO LEAD

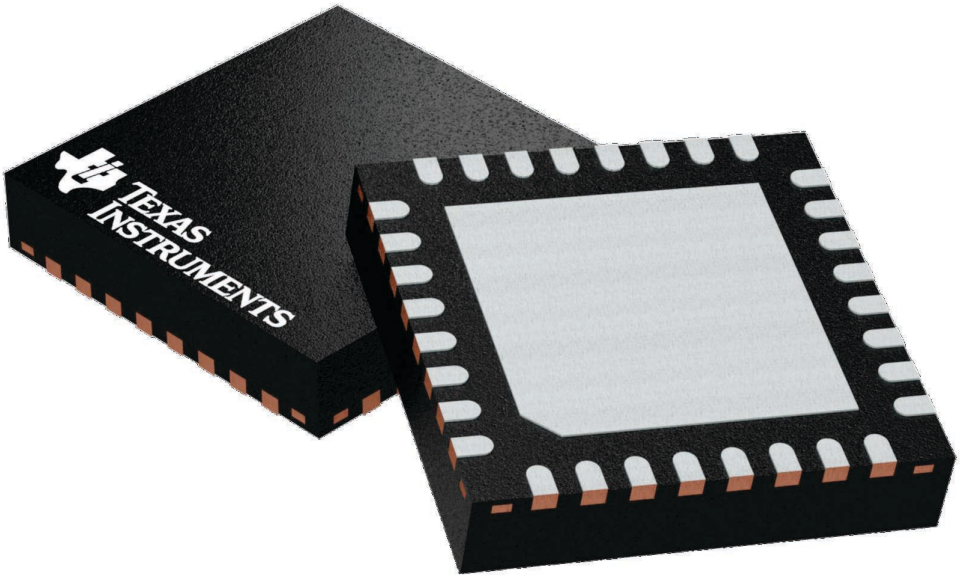

Images above are just a representation of the package family, actual package may vary.
Refer to the product data sheet for package details.

4224745/A

RHB0032E

PACKAGE OUTLINE

VQFN - 1 mm max height

PLASTIC QUAD FLATPACK - NO LEAD

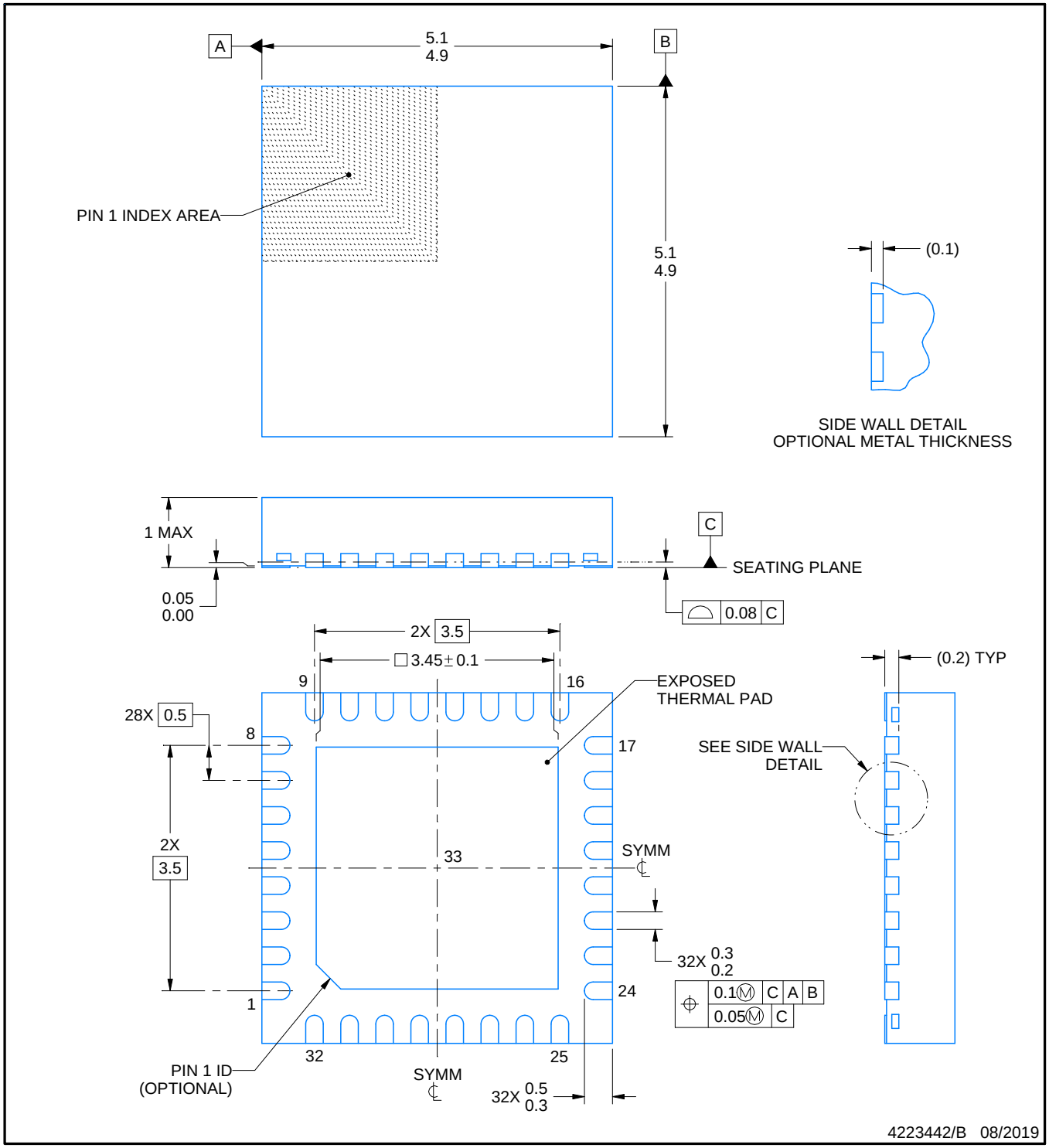

NOTES:

1. All linear dimensions are in millimeters. Any dimensions in parenthesis are for reference only. Dimensioning and tolerancing per ASME Y14.5M.
2. This drawing is subject to change without notice.
3. The package thermal pad must be soldered to the printed circuit board for thermal and mechanical performance.

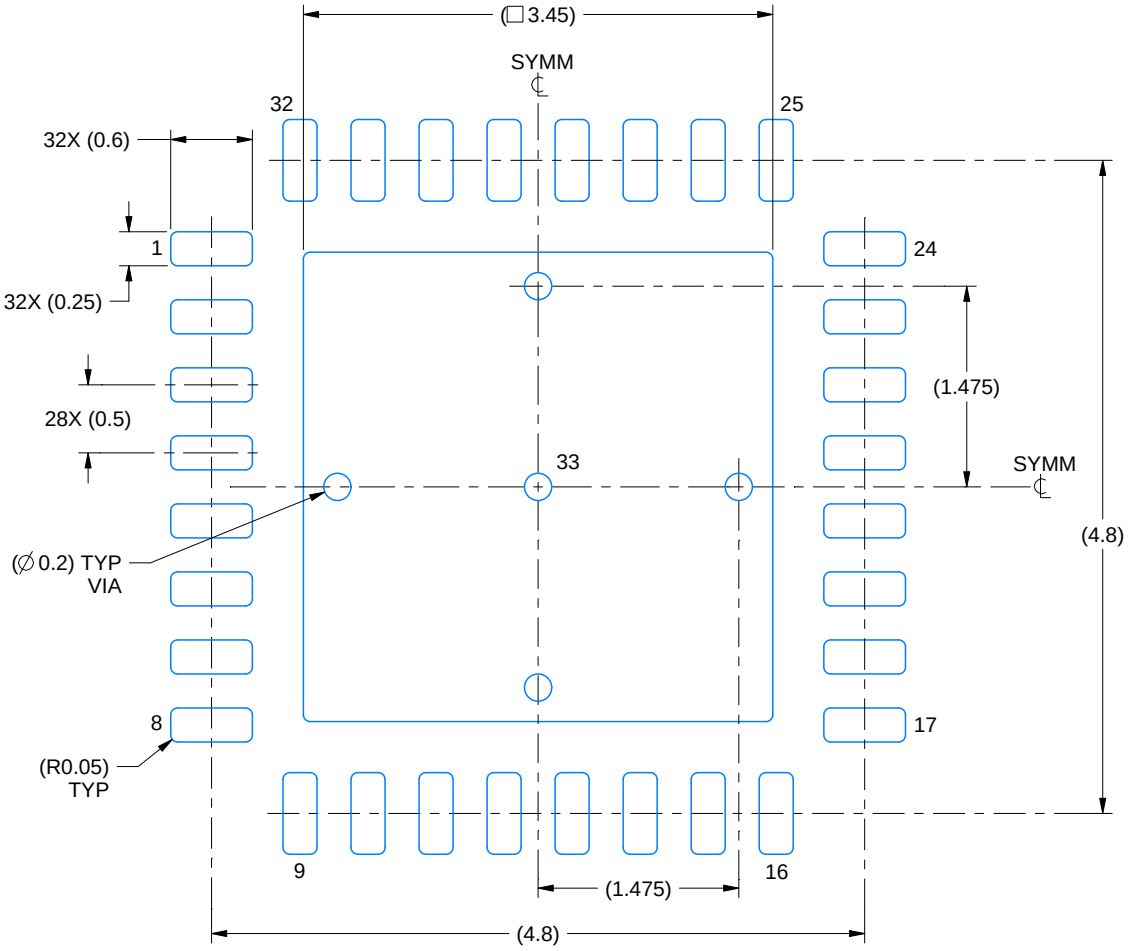

LAND PATTERN EXAMPLE
SCALE:18X

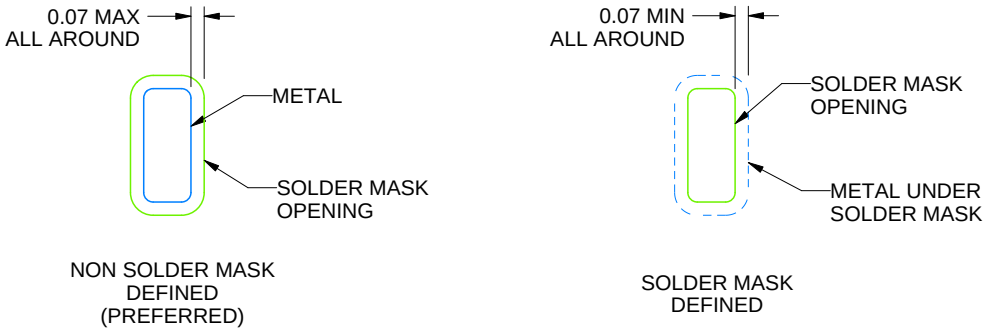

SOLDER MASK DETAILS

4223442/B 08/2019

NOTES: (continued)

4. This package is designed to be soldered to a thermal pad on the board. For more information, see Texas Instruments literature number SLUA271 (www.ti.com/lit/slua271).
5. Vias are optional depending on application, refer to device data sheet. If any vias are implemented, refer to their locations shown on this view. It is recommended that vias under paste be filled, plugged or tented.

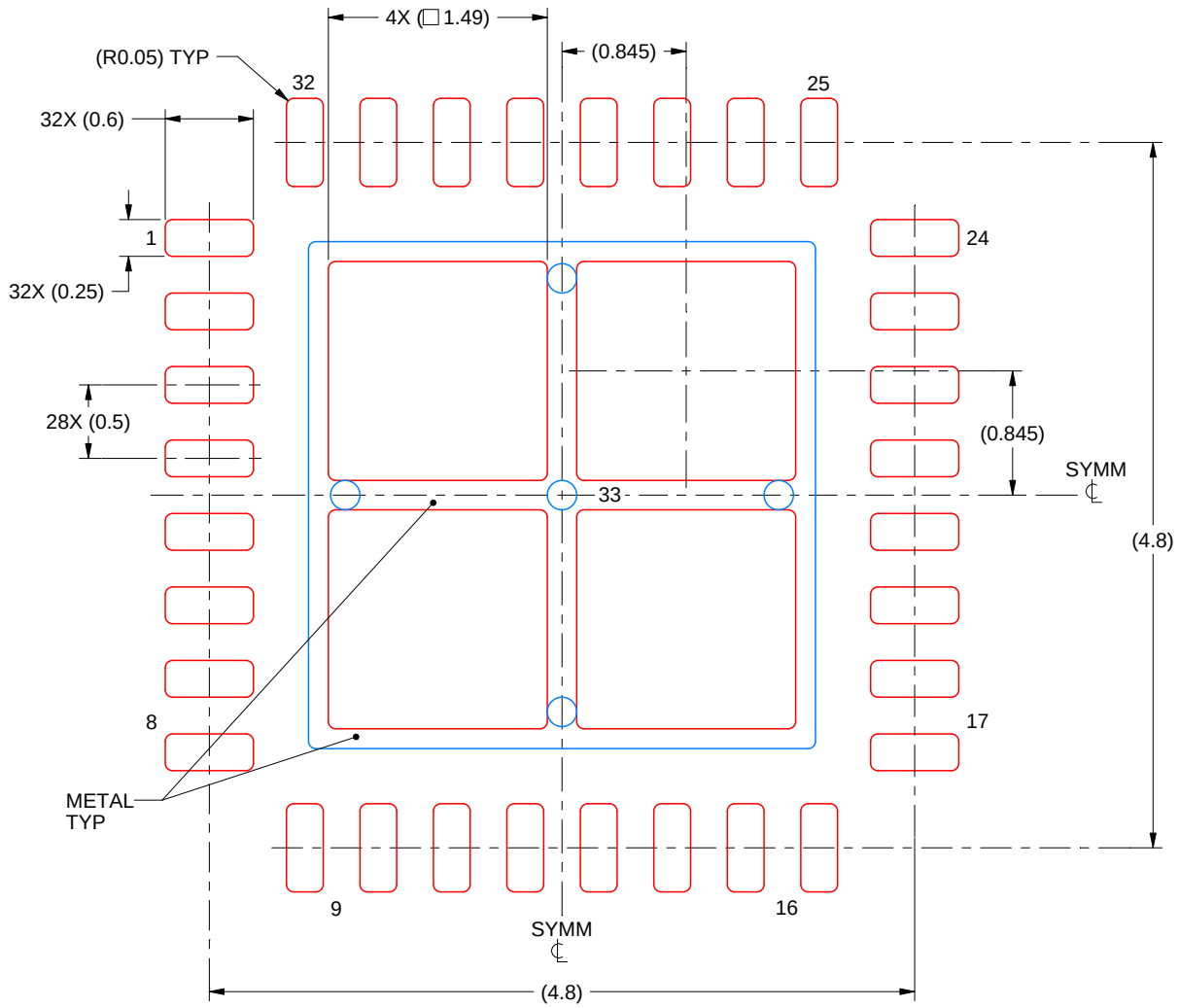

SOLDER PASTE EXAMPLE
BASED ON 0.125 mm THICK STENCIL

EXPOSED PAD 33:
75% PRINTED SOLDER COVERAGE BY AREA UNDER PACKAGE
SCALE:20X

4223442/B 08/2019

NOTES: (continued)

6. Laser cutting apertures with trapezoidal walls and rounded corners may offer better paste release. IPC-7525 may have alternate design recommendations.

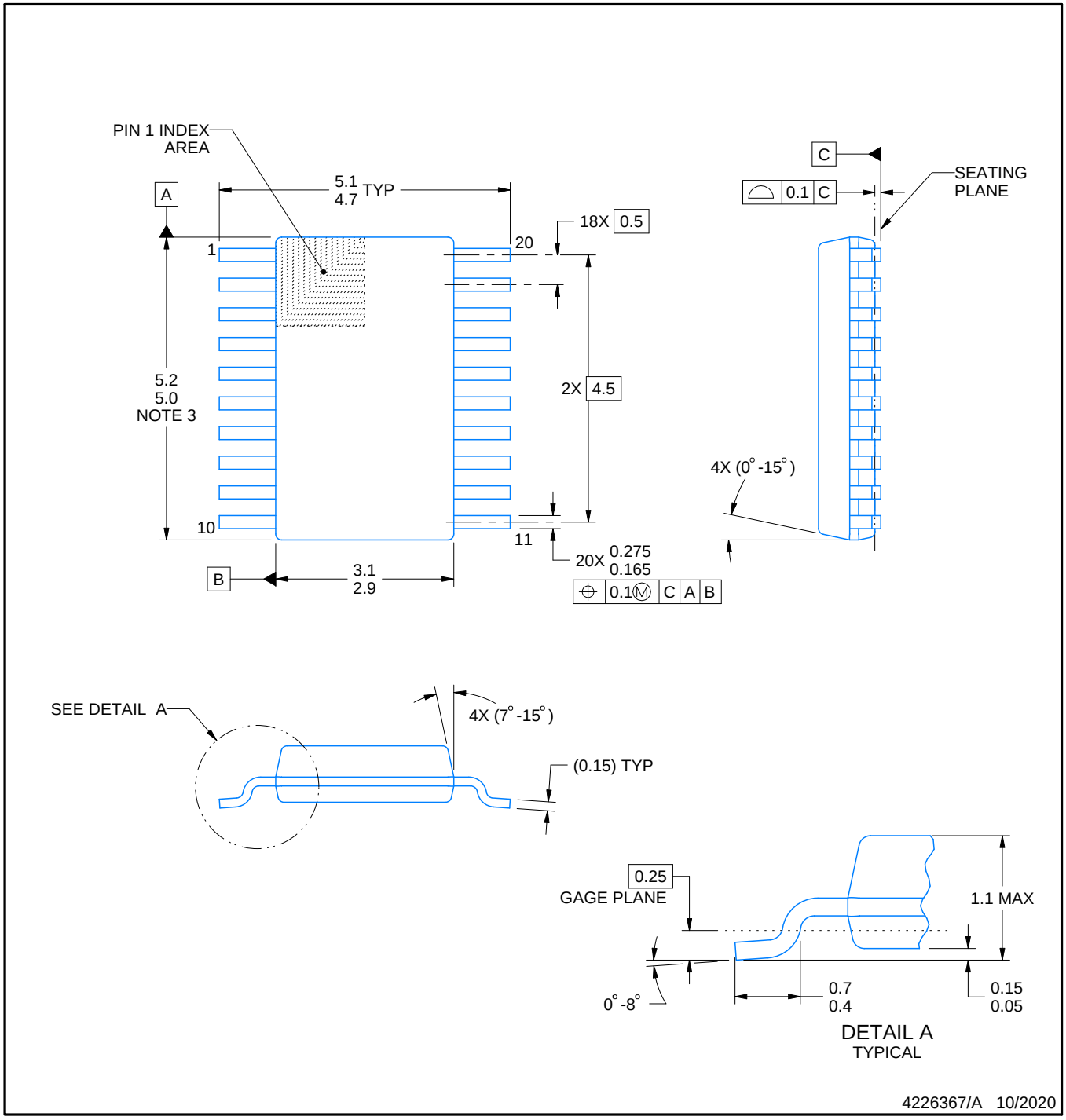

PowerPAD is a trademark of Texas Instruments.

NOTES:

1. All linear dimensions are in millimeters. Any dimensions in parenthesis are for reference only. Dimensioning and tolerancing per ASME Y14.5M.
2. This drawing is subject to change without notice.
3. This dimension does not include mold flash, protrusions, or gate burrs. Mold flash, protrusions, or gate burrs shall not exceed 0.15 mm per side.
4. No JEDEC registration as of September 2020.
5. Features may differ or may not be present.

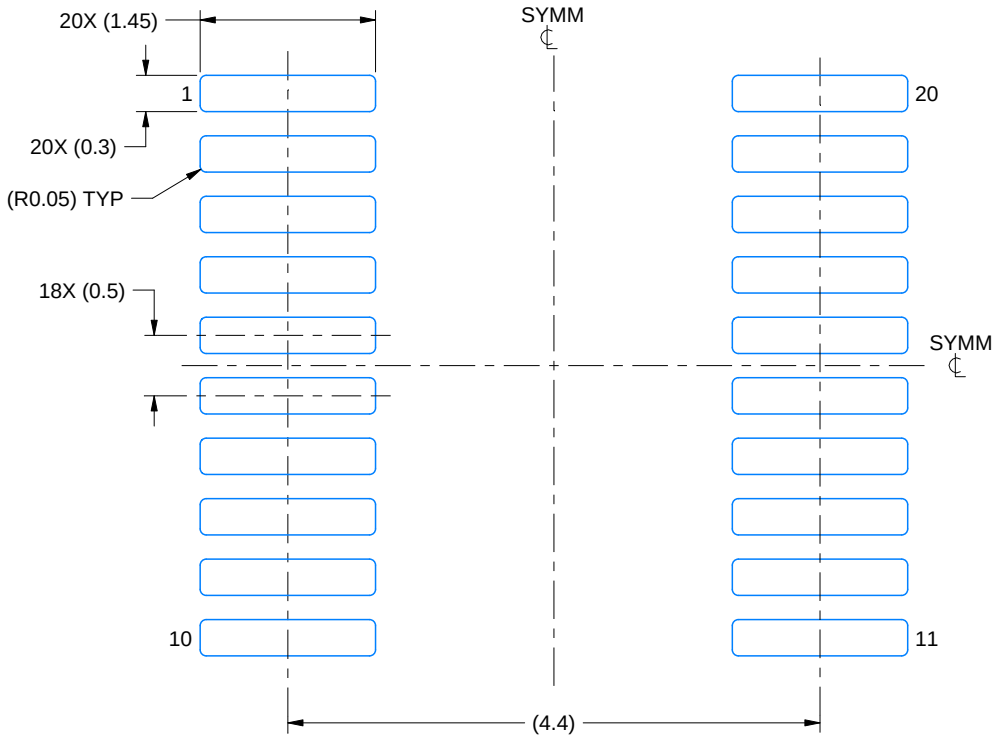

LAND PATTERN EXAMPLE
SCALE: 16X

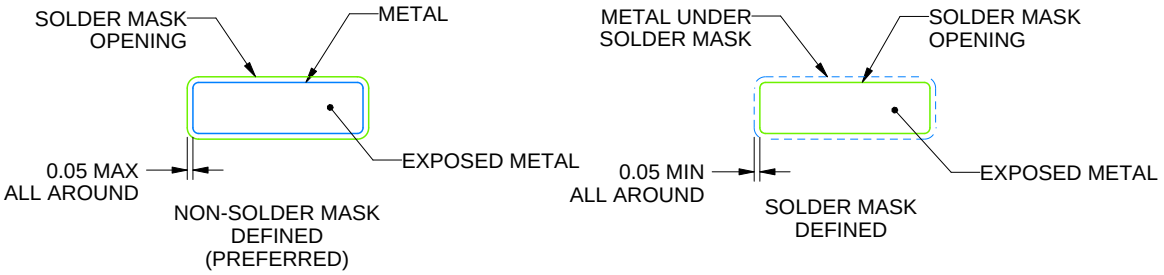

SOLDER MASK DETAILS

4226367/A 10/2020

NOTES: (continued)

6. Publication IPC-7351 may have alternate designs.
7. Solder mask tolerances between and around signal pads can vary based on board fabrication site.
8. This package is designed to be soldered to a thermal pad on the board. For more information, see Texas Instruments literature numbers SLMA002 (www.ti.com/lit/slma002) and SLMA004 (www.ti.com/lit/slma004).
9. Size of metal pad may vary due to creepage requirement.
10. Vias are optional depending on application, refer to device data sheet. It is recommended that vias under paste be filled, plugged or tented.

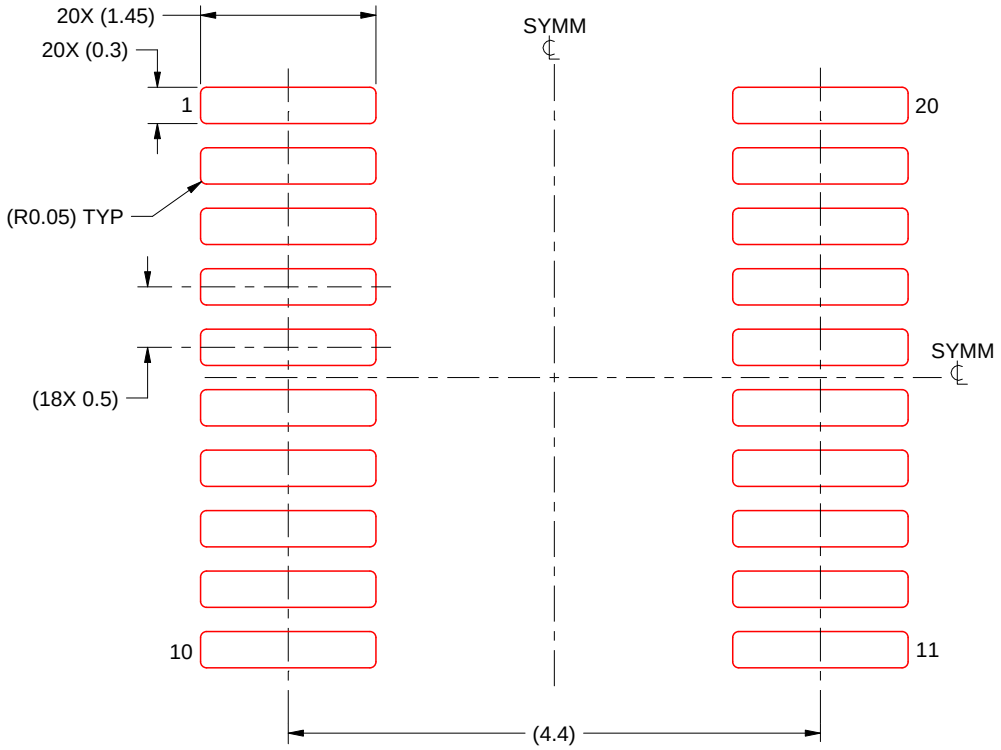

SOLDER PASTE EXAMPLE
BASED ON 0.125 mm THICK STENCIL
SCALE: 16X

4226367/A 10/2020

NOTES: (continued)

11. Laser cutting apertures with trapezoidal walls and rounded corners may offer better paste release. IPC-7525 may have alternate design recommendations.
12. Board assembly site may have different recommendations for stencil design.

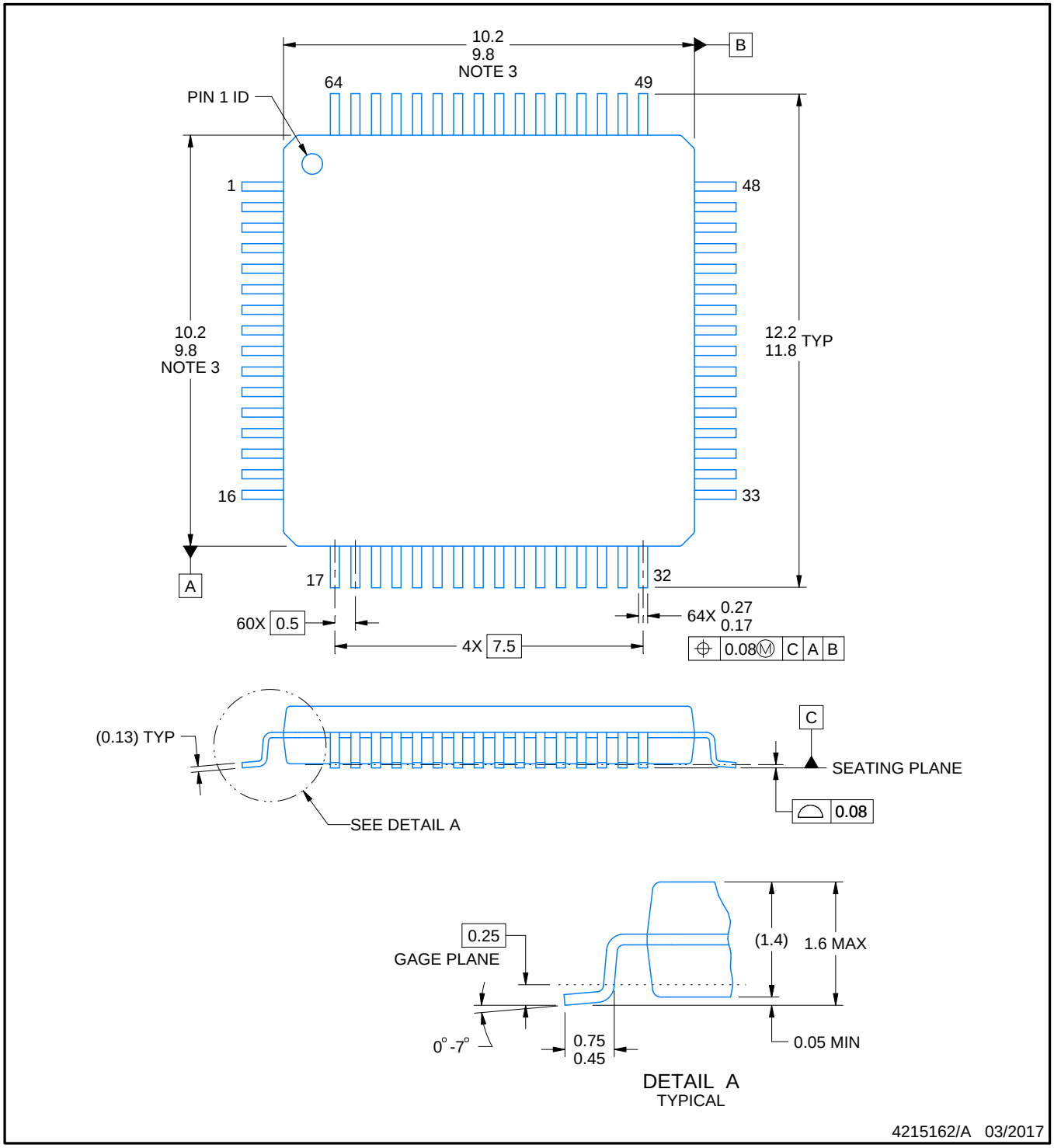

NOTES:

1. All linear dimensions are in millimeters. Any dimensions in parenthesis are for reference only. Dimensioning and tolerancing per ASME Y14.5M.
2. This drawing is subject to change without notice.
3. This dimension does not include mold flash, protrusions, or gate burrs. Mold flash, protrusions, or gate burrs shall not exceed 0.15 mm per side.
4. Reference JEDEC registration MS-026.

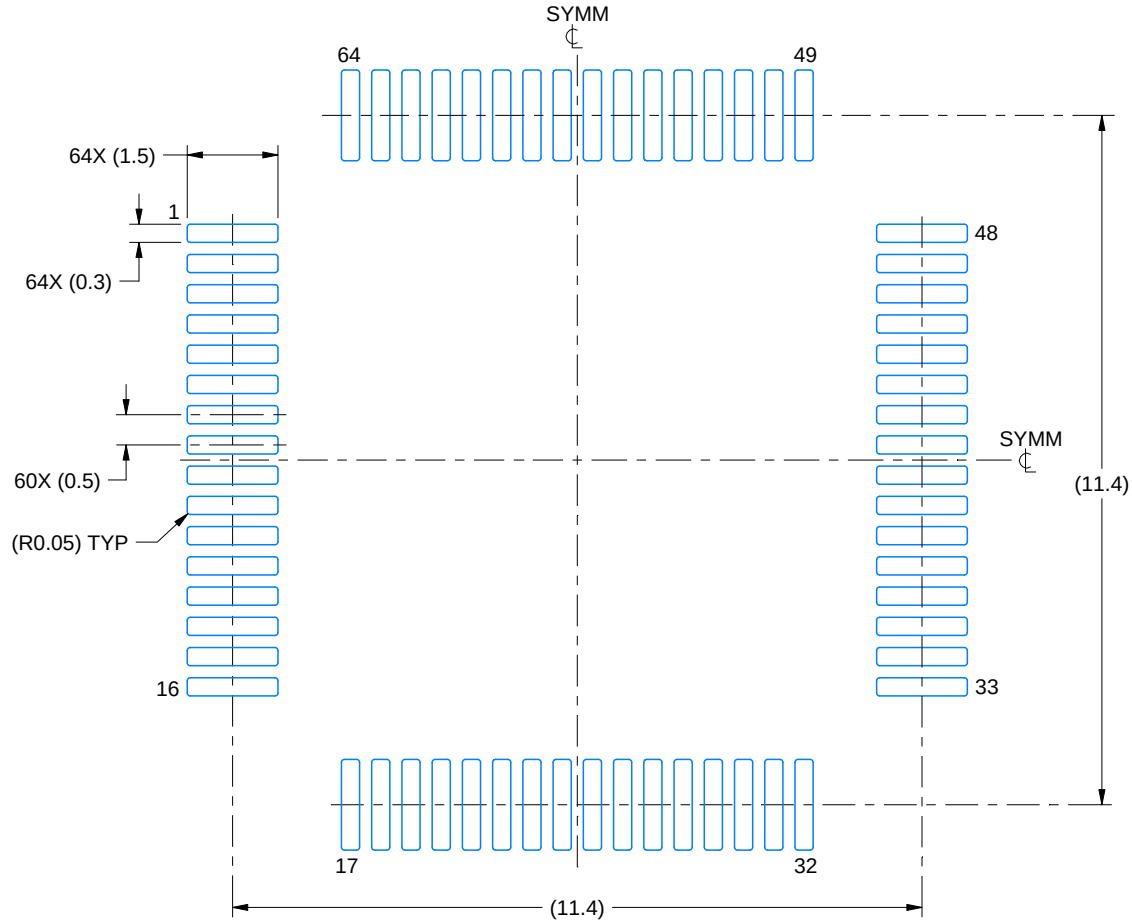

LAND PATTERN EXAMPLE
EXPOSED METAL SHOWN
SCALE:8X

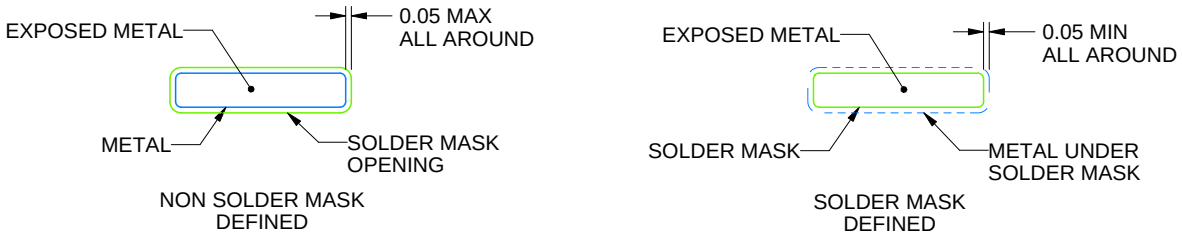

SOLDER MASK DETAILS

4215162/A 03/2017

NOTES: (continued)

5. Publication IPC-7351 may have alternate designs.
6. Solder mask tolerances between and around signal pads can vary based on board fabrication site.
7. For more information, see Texas Instruments literature number SLMA004 (www.ti.com/lit/slma004).

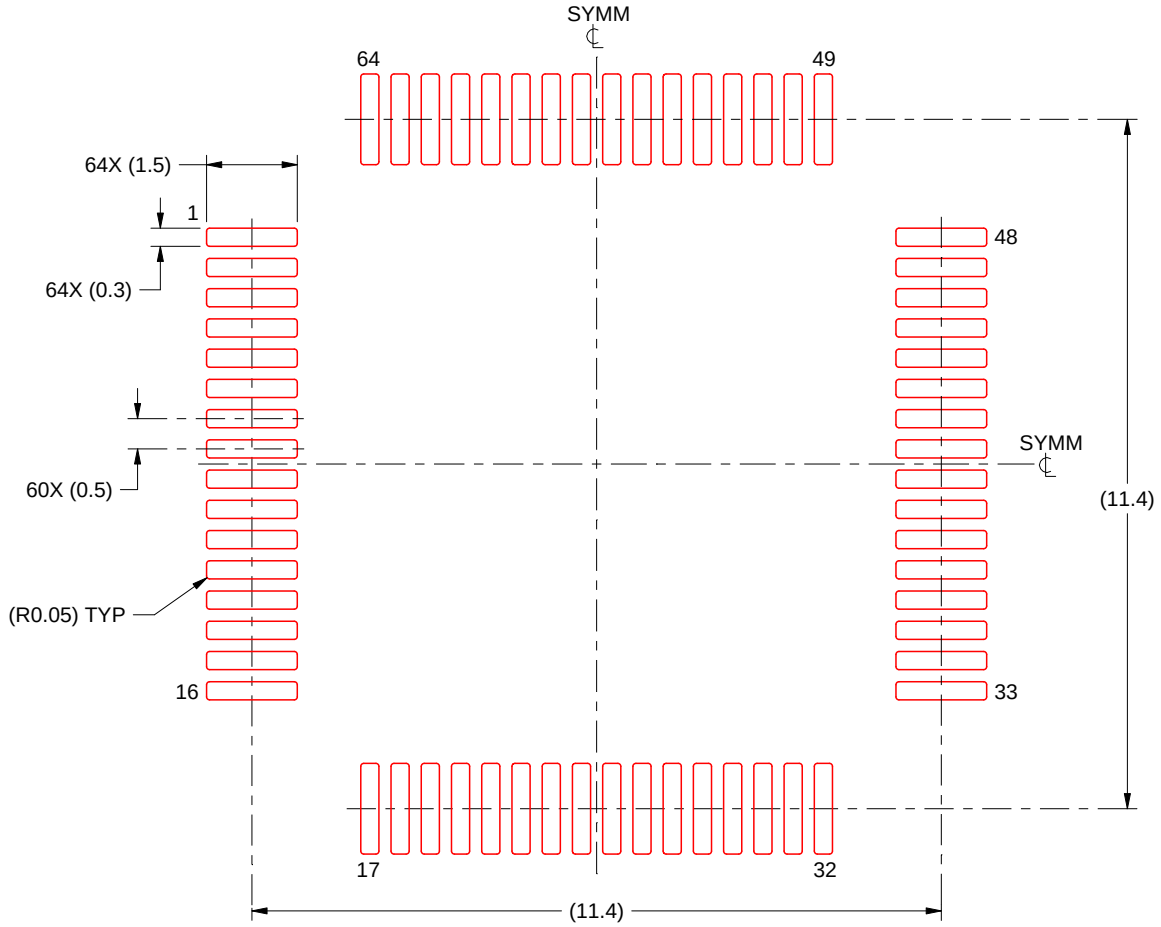

SOLDER PASTE EXAMPLE
BASED ON 0.125 mm THICK STENCIL
SCALE:8X

4215162/A 03/2017

NOTES: (continued)

8. Laser cutting apertures with trapezoidal walls and rounded corners may offer better paste release. IPC-7525 may have alternate design recommendations.
9. Board assembly site may have different recommendations for stencil design.

GENERIC PACKAGE VIEW

RGZ 48

VQFN - 1 mm max height

7 x 7, 0.5 mm pitch

PLASTIC QUADFLAT PACK- NO LEAD

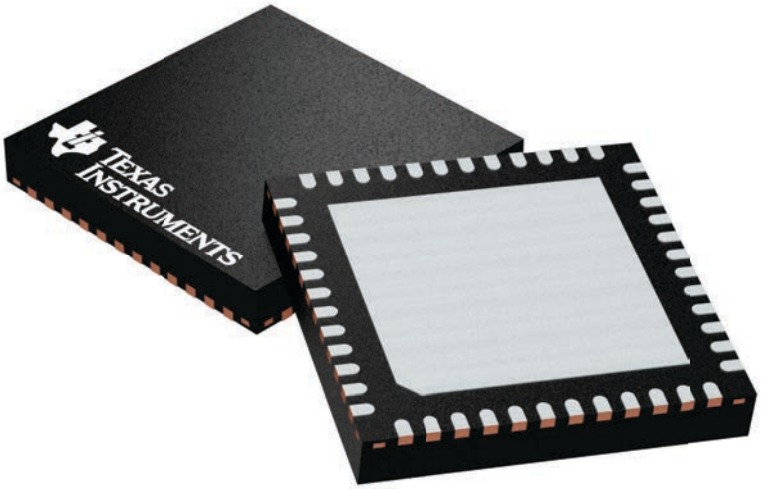

Images above are just a representation of the package family, actual package may vary.
Refer to the product data sheet for package details.

4224671/A

RGZ0048B

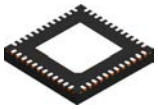

PACKAGE OUTLINE

VQFN - 1 mm max height

PLASTIC QUAD FLATPACK - NO LEAD

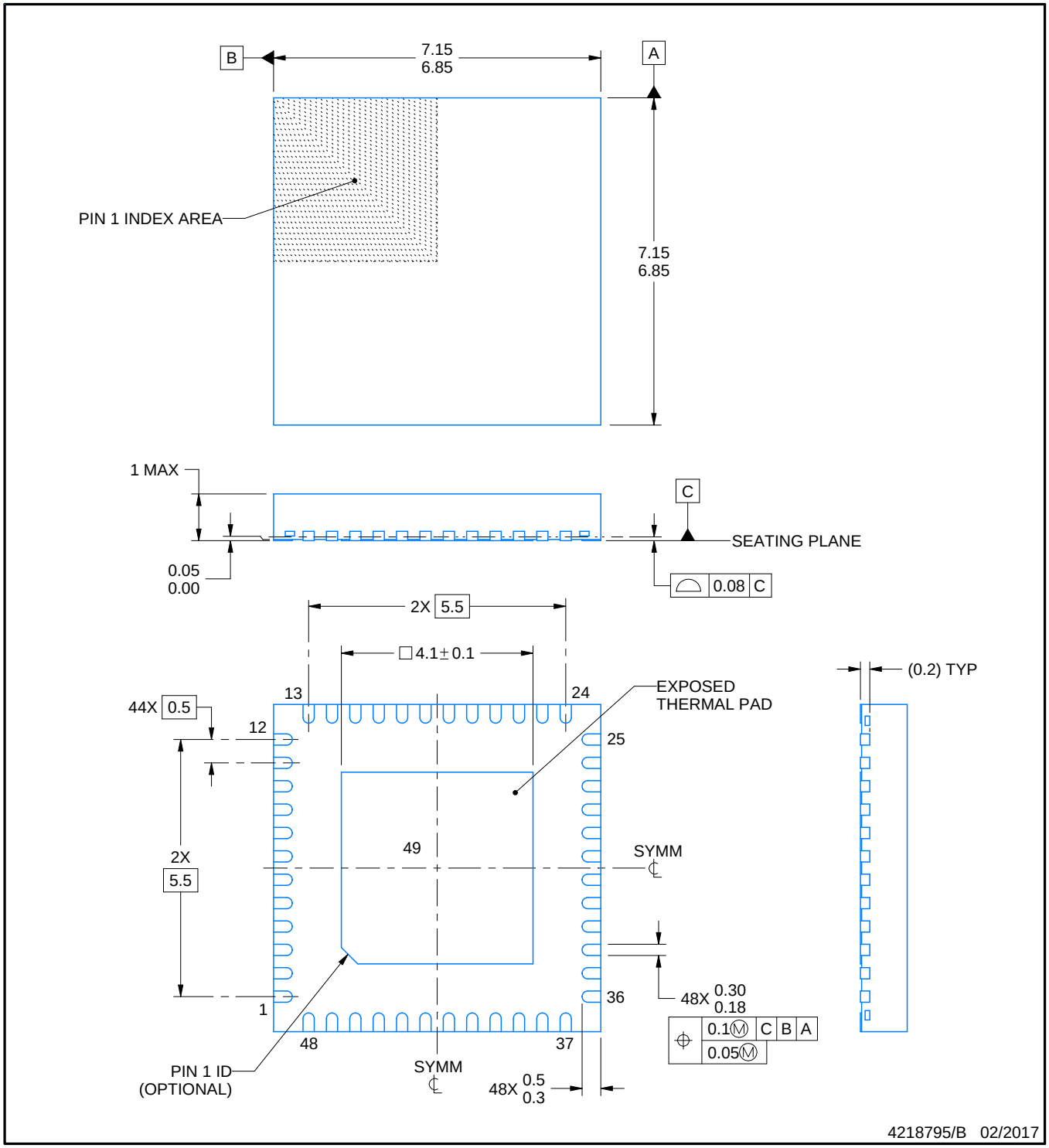

NOTES:

1. All linear dimensions are in millimeters. Any dimensions in parenthesis are for reference only. Dimensioning and tolerancing per ASME Y14.5M.
2. This drawing is subject to change without notice.
3. The package thermal pad must be soldered to the printed circuit board for thermal and mechanical performance.

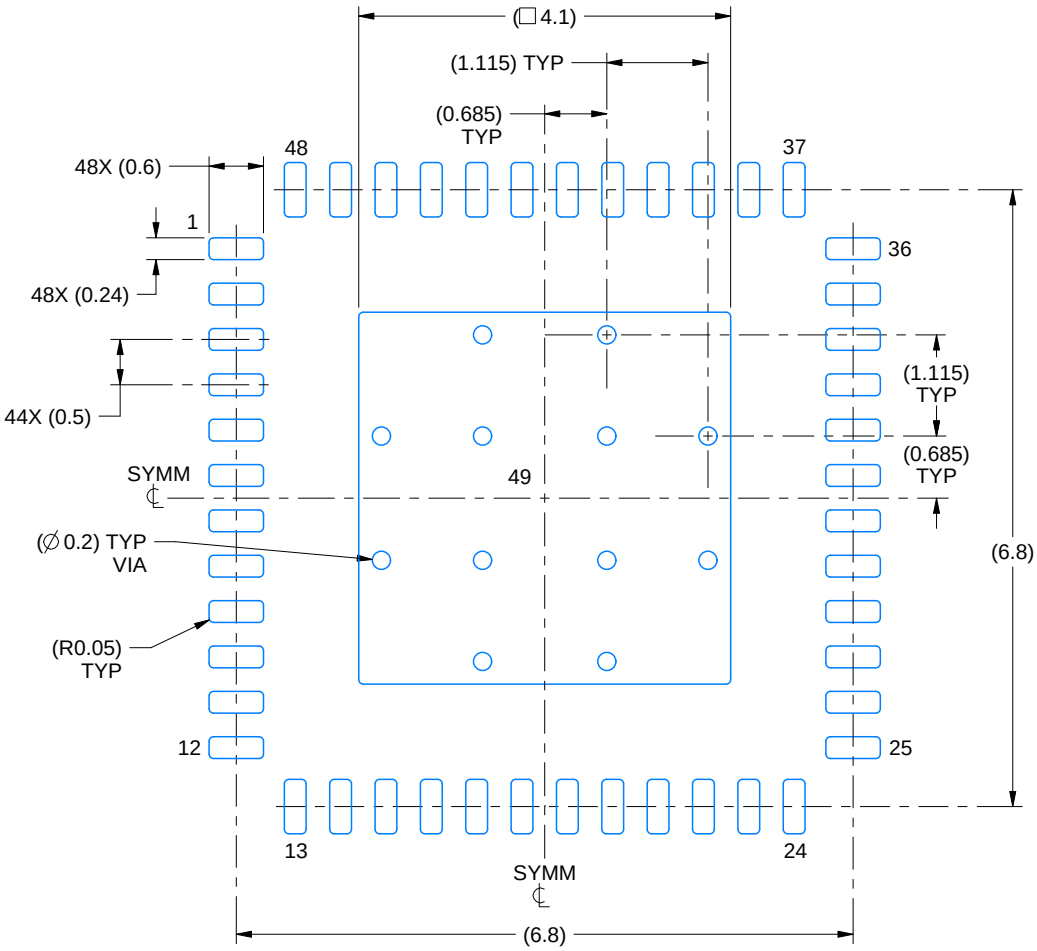

LAND PATTERN EXAMPLE
EXPOSED METAL SHOWN
SCALE:12X

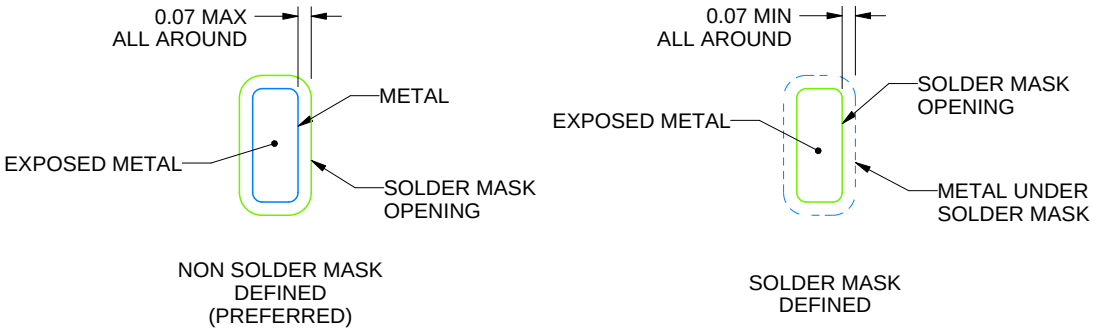

SOLDER MASK DETAILS

4218795/B 02/2017

NOTES: (continued)

4. This package is designed to be soldered to a thermal pad on the board. For more information, see Texas Instruments literature number SLUA271 (www.ti.com/lit/slua271).
5. Vias are optional depending on application, refer to device data sheet. If any vias are implemented, refer to their locations shown on this view. It is recommended that vias under paste be filled, plugged or tented.

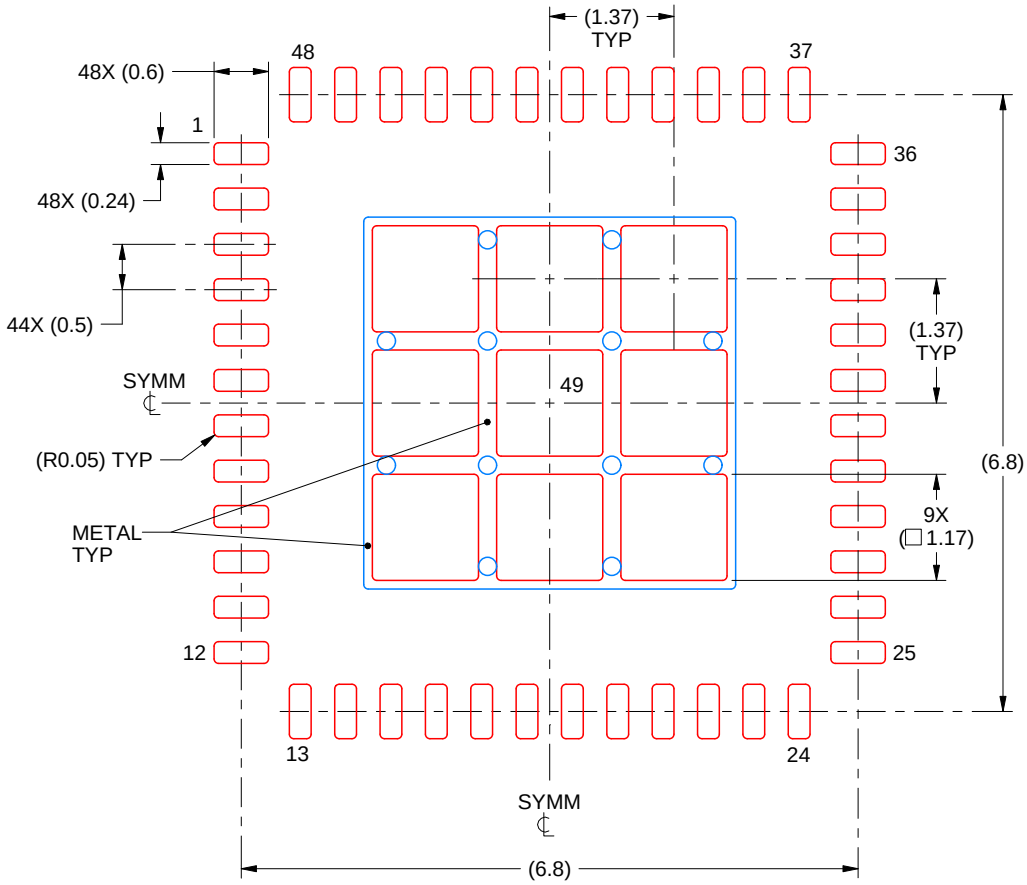

SOLDER PASTE EXAMPLE
BASED ON 0.125 mm THICK STENCIL

EXPOSED PAD 49
73% PRINTED SOLDER COVERAGE BY AREA UNDER PACKAGE
SCALE:12X

4218795/B 02/2017

NOTES: (continued)

6. Laser cutting apertures with trapezoidal walls and rounded corners may offer better paste release. IPC-7525 may have alternate design recommendations.

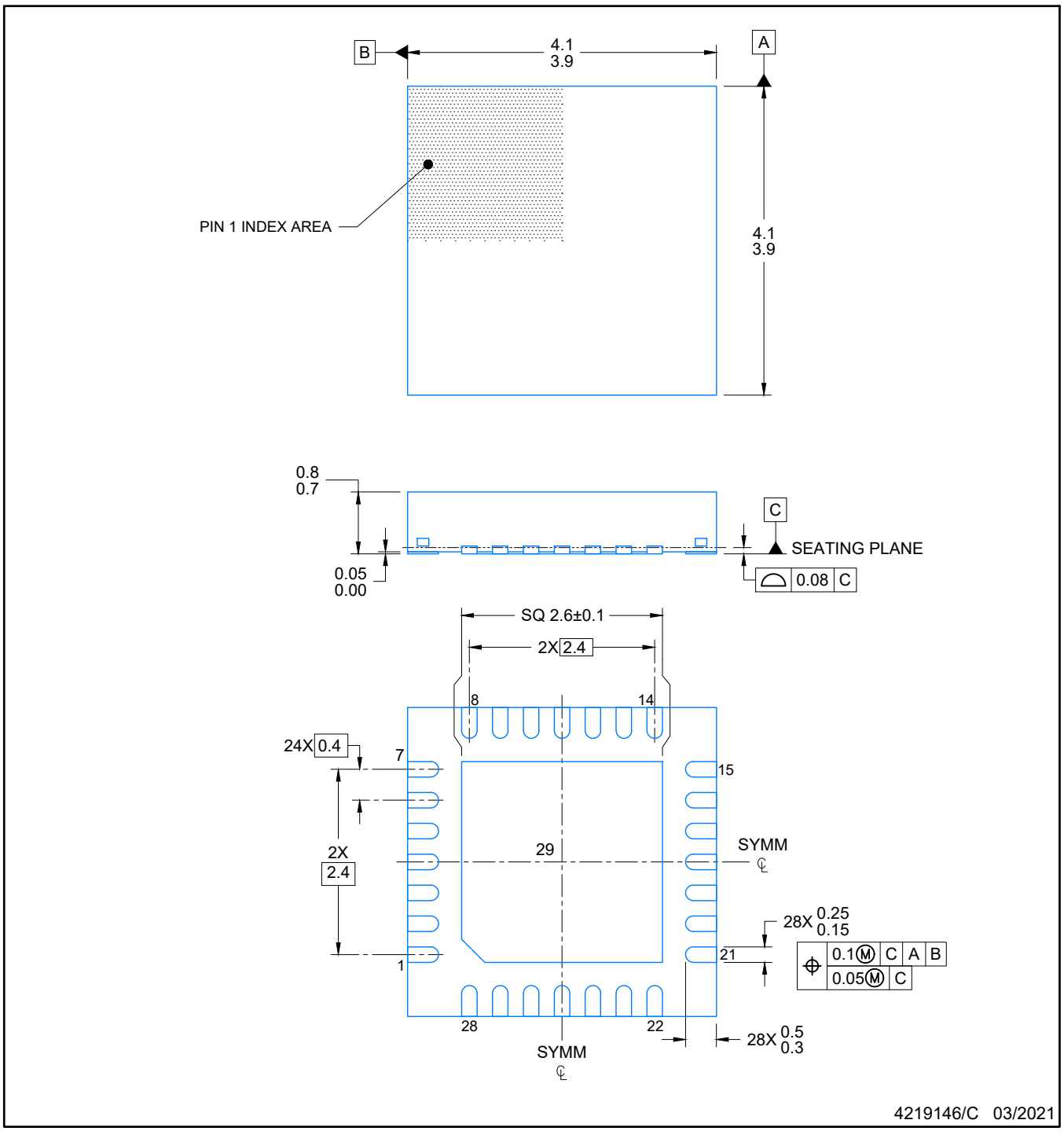

NOTES:

1. All linear dimensions are in millimeters. Any dimensions in parenthesis are for reference only. Dimensioning and tolerancing per ASME Y14.5M.
2. This drawing is subject to change without notice.
3. The package thermal pad must be soldered to the printed circuit board for optimal thermal and mechanical performance.

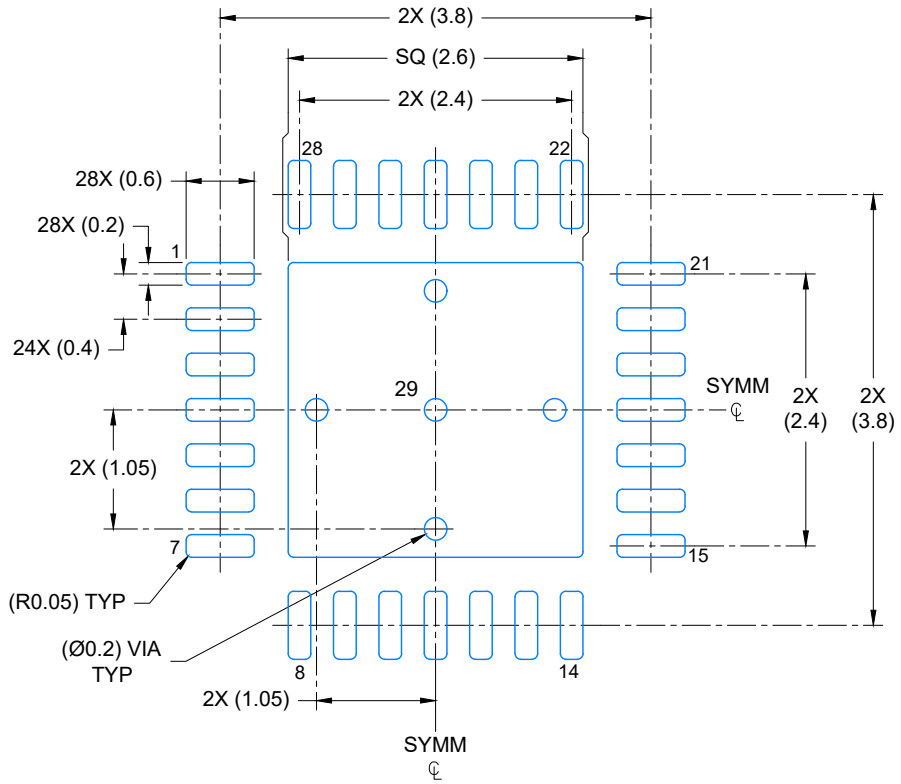

LAND PATTERN EXAMPLE
EXPOSED METAL SHOWN
SCALE: 15X

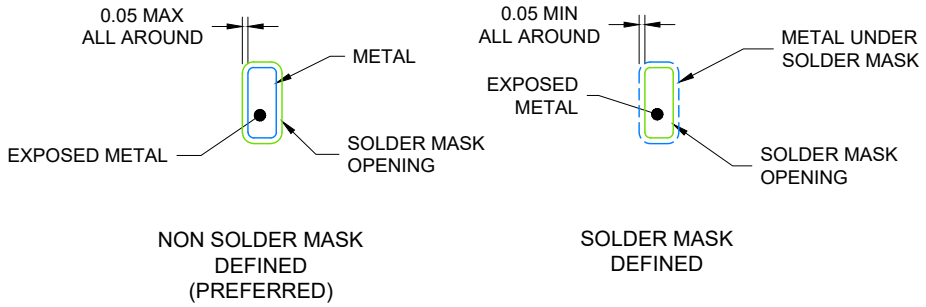

SOLDER MASK DETAILS

4219146/C 03/2021

NOTES: (continued)

4. This package is designed to be soldered to a thermal pad on the board. For more information, see Texas Instruments literature number SLUA271 (www.ti.com/lit/slua271).
5. Vias are optional depending on application, refer to device data sheet. If any vias are implemented, refer to their locations shown on this view. It is recommended that vias under paste be filled, plugged or tented.

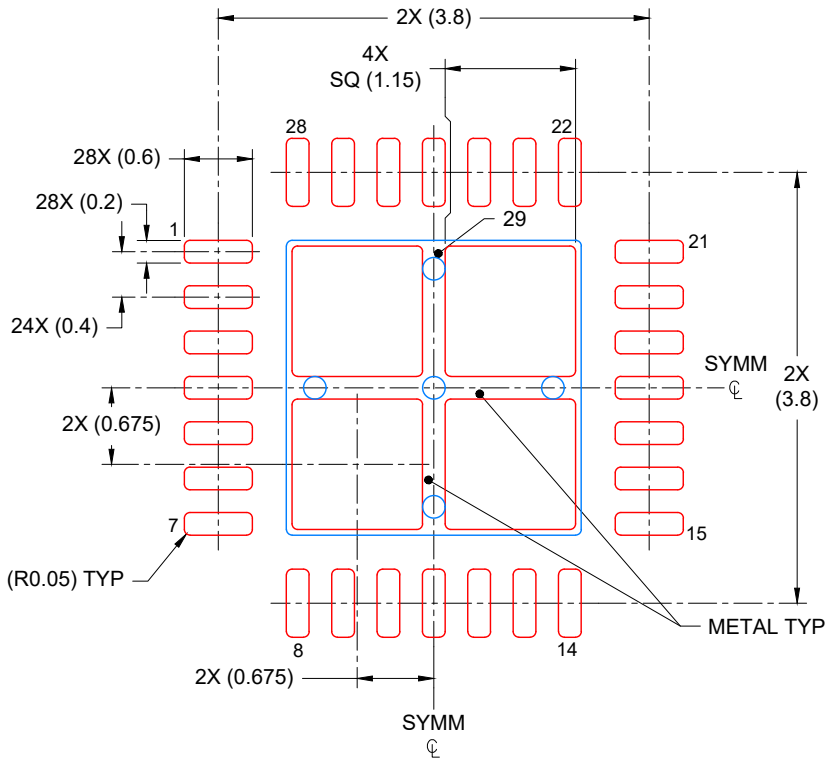

SOLDER PASTE EXAMPLE
BASED ON 0.125 mm THICK STENCIL

EXPOSED PAD
78% PRINTED COVERAGE BY AREA
SCALE: 15X

4219146/C 03/2021

NOTES: (continued)

6. Laser cutting apertures with trapezoidal walls and rounded corners may offer better paste release. IPC-7525 may have alternate design recommendations.

IMPORTANT NOTICE AND DISCLAIMER

TI PROVIDES TECHNICAL AND RELIABILITY DATA (INCLUDING DATASHEETS), DESIGN RESOURCES (INCLUDING REFERENCE DESIGNS), APPLICATION OR OTHER DESIGN ADVICE, WEB TOOLS, SAFETY INFORMATION, AND OTHER RESOURCES “AS IS” AND WITH ALL FAULTS, AND DISCLAIMS ALL WARRANTIES, EXPRESS AND IMPLIED, INCLUDING WITHOUT LIMITATION ANY IMPLIED WARRANTIES OF MERCHANTABILITY, FITNESS FOR A PARTICULAR PURPOSE OR NON-INFRINGEMENT OF THIRD PARTY INTELLECTUAL PROPERTY RIGHTS.

These resources are intended for skilled developers designing with TI products. You are solely responsible for (1) selecting the appropriate TI products for your application, (2) designing, validating and testing your application, and (3) ensuring your application meets applicable standards, and any other safety, security, regulatory or other requirements.

These resources are subject to change without notice. TI grants you permission to use these resources only for development of an application that uses the TI products described in the resource. Other reproduction and display of these resources is prohibited. No license is granted to any other TI intellectual property right or to any third party intellectual property right. TI disclaims responsibility for, and you fully indemnify TI and its representatives against any claims, damages, costs, losses, and liabilities arising out of your use of these resources.

TI’s products are provided subject to TI’s Terms of Sale, TI’s General Quality Guidelines, or other applicable terms available either on ti.com or provided in conjunction with such TI products. TI’s provision of these resources does not expand or otherwise alter TI’s applicable warranties or warranty disclaimers for TI products. Unless TI explicitly designates a product as custom or customer-specified, TI products are standard, catalog, general purpose devices.

TI objects to and rejects any additional or different terms you may propose.

Copyright © 2026, Texas Instruments Incorporated

Last updated 10/2025