- **Choice of Operating Speeds**
  - **High-Speed, A Devices . . . 25 MHz Min**
  - **Half-Power, A-2 Devices . . . 16 MHz Min**
- **Choice of Input/Output Configuration**
- **Package Options Include Both Ceramic DIP and Chip Carrier in Addition to Ceramic Flat Package**

DEVICE	I INPUTS	3-STATE O OUTPUTS	REGISTERED Q OUTPUTS	I/O PORTS
PAL16L8	10	2	0	6
PAL16R4	8	0	4 (3-state buffers)	4
PAL16R6	8	0	6 (3-state buffers)	2
PAL16R8	8	0	8 (3-state buffers)	0

PAL16L8'
J OR W PACKAGE

(TOP VIEW)

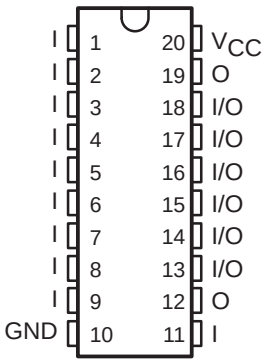

PAL16L8'
FK PACKAGE

(TOP VIEW)

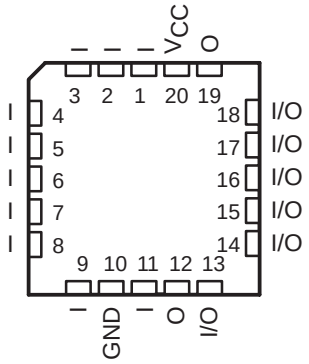

description

These programmable array logic devices feature high speed and a choice of either standard or half-power devices. They combine Advanced Low-Power Schottky technology with proven titanium-tungsten fuses. These devices will provide reliable, high-performance substitutes for conventional TTL logic. Their easy programmability allow for quick design of "custom" functions and typically results in a more compact circuit board. In addition, chip carriers are available for further reduction in board space.

The Half-Power versions offer a choice of operating frequency, switching speeds, and power dissipation. In many cases, these Half-Power devices can result in significant power reduction from an overall system level.

The PAL16' M series is characterized for operation over the full military temperature range of –55°C to 125°C.

PAL is a registered trademark of Advanced Micro Devices Inc.

PRODUCTION DATA information is current as of publication date. Products conform to specifications per the terms of Texas Instruments standard warranty. Production processing does not necessarily include testing of all parameters.

Copyright © 1992, Texas Instruments Incorporated

PAL16R4'
J OR W PACKAGE

(TOP VIEW)

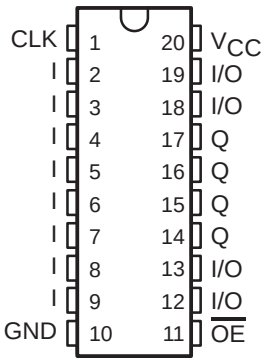

PAL16R4'
FK PACKAGE

(TOP VIEW)

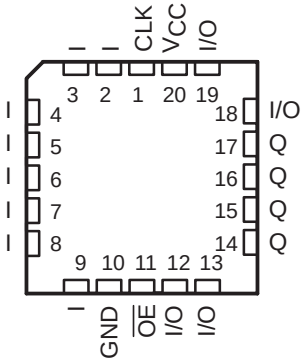

PAL16R6'
J OR W PACKAGE

(TOP VIEW)

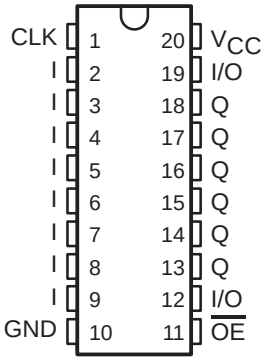

PAL16R6'
FK PACKAGE

(TOP VIEW)

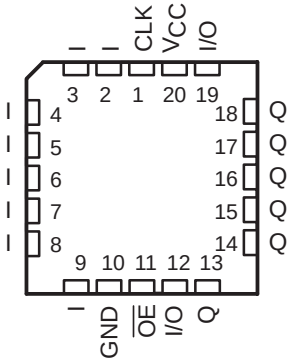

PAL16R8'
J OR W PACKAGE

(TOP VIEW)

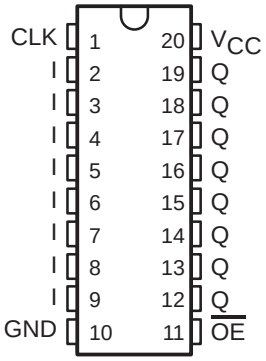

PAL16R8'
FK PACKAGE

(TOP VIEW)

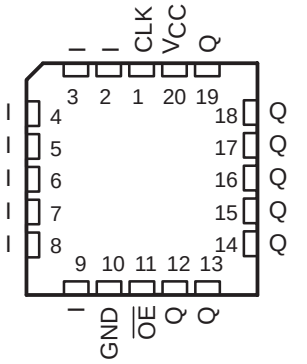

functional block diagrams (positive logic)

PAL16L8AM
PAL16L8A-2M

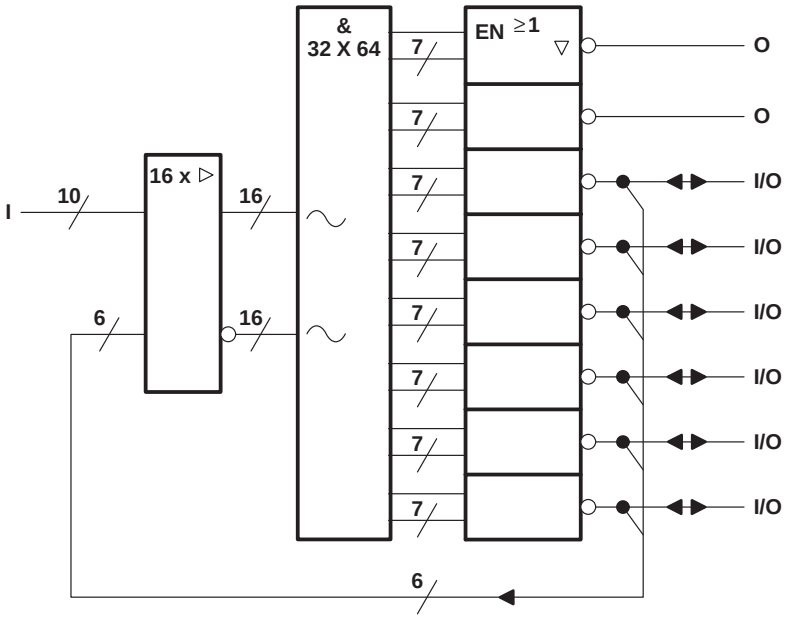

PAL16R4AM
PAL16R4A-2M

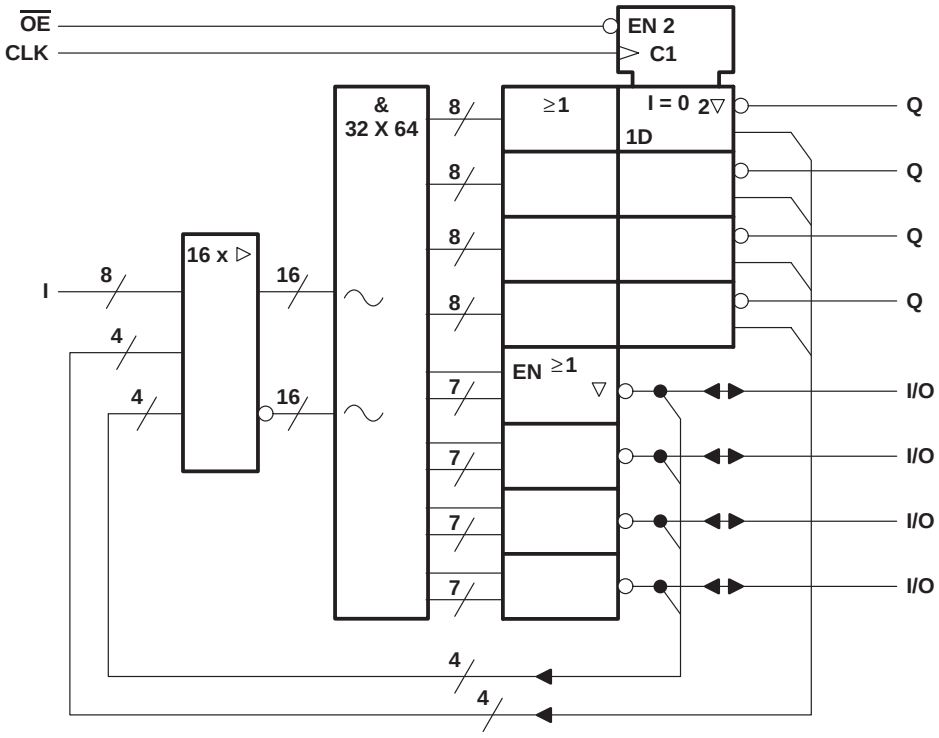

denotes fused inputs

functional block diagrams (positive logic)

PAL16R6AM
PAL16R6A-2M

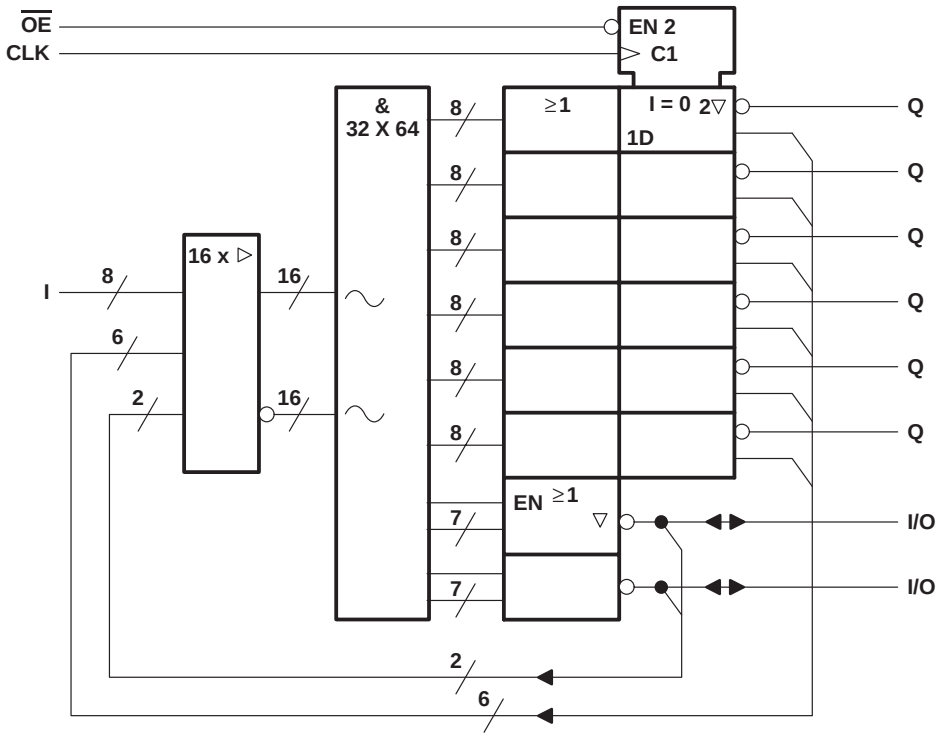

PAL16R8AM
PAL16R8A-2M

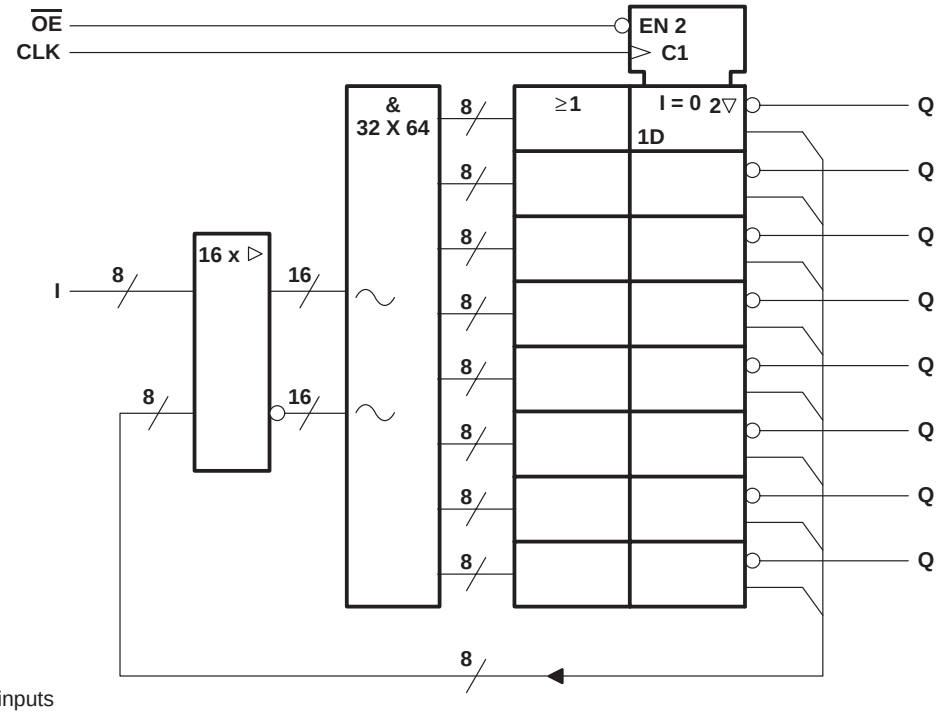

denotes fused inputs

logic diagram (positive logic)

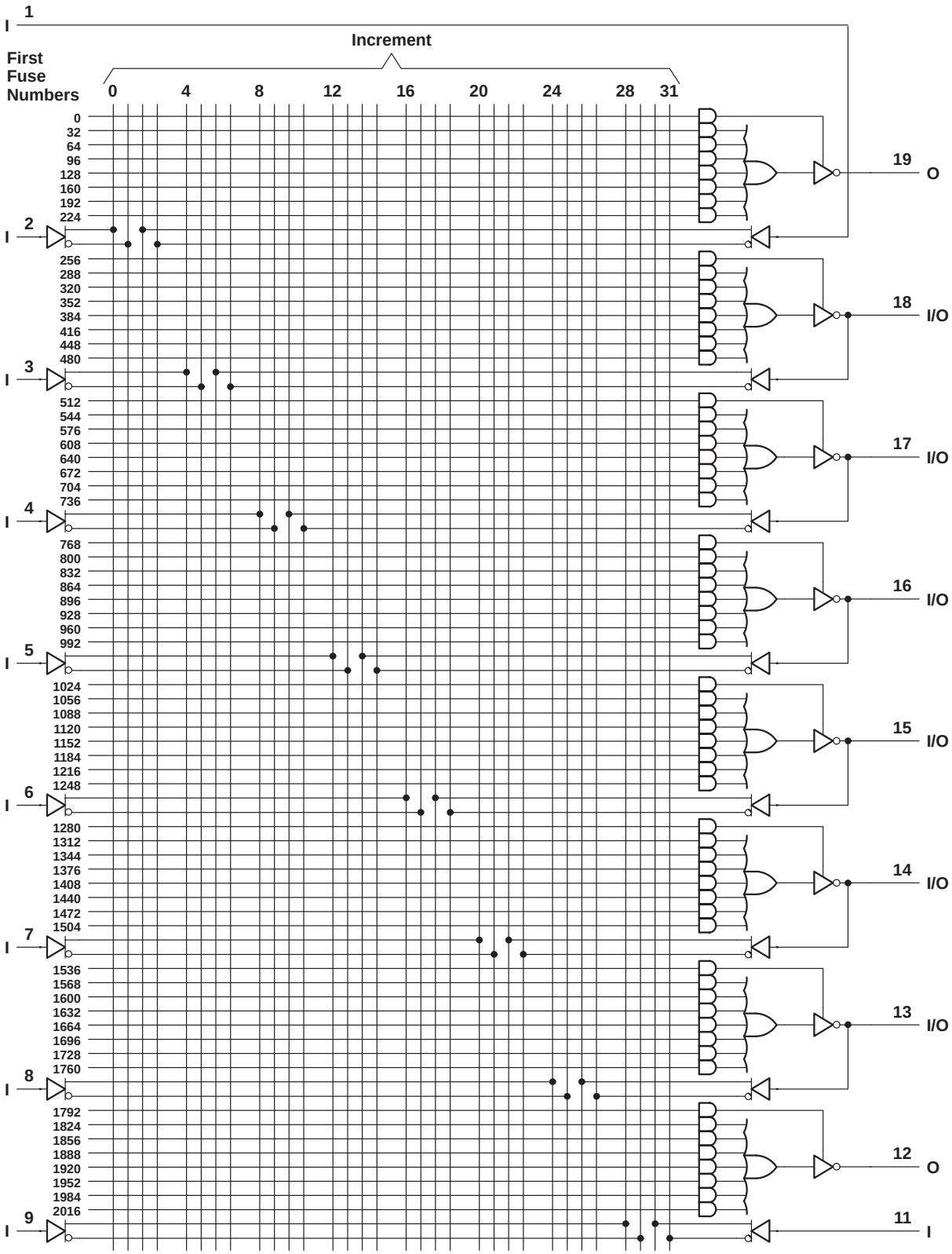

Fuse number = First fuse number + Increment

logic diagram (positive logic)

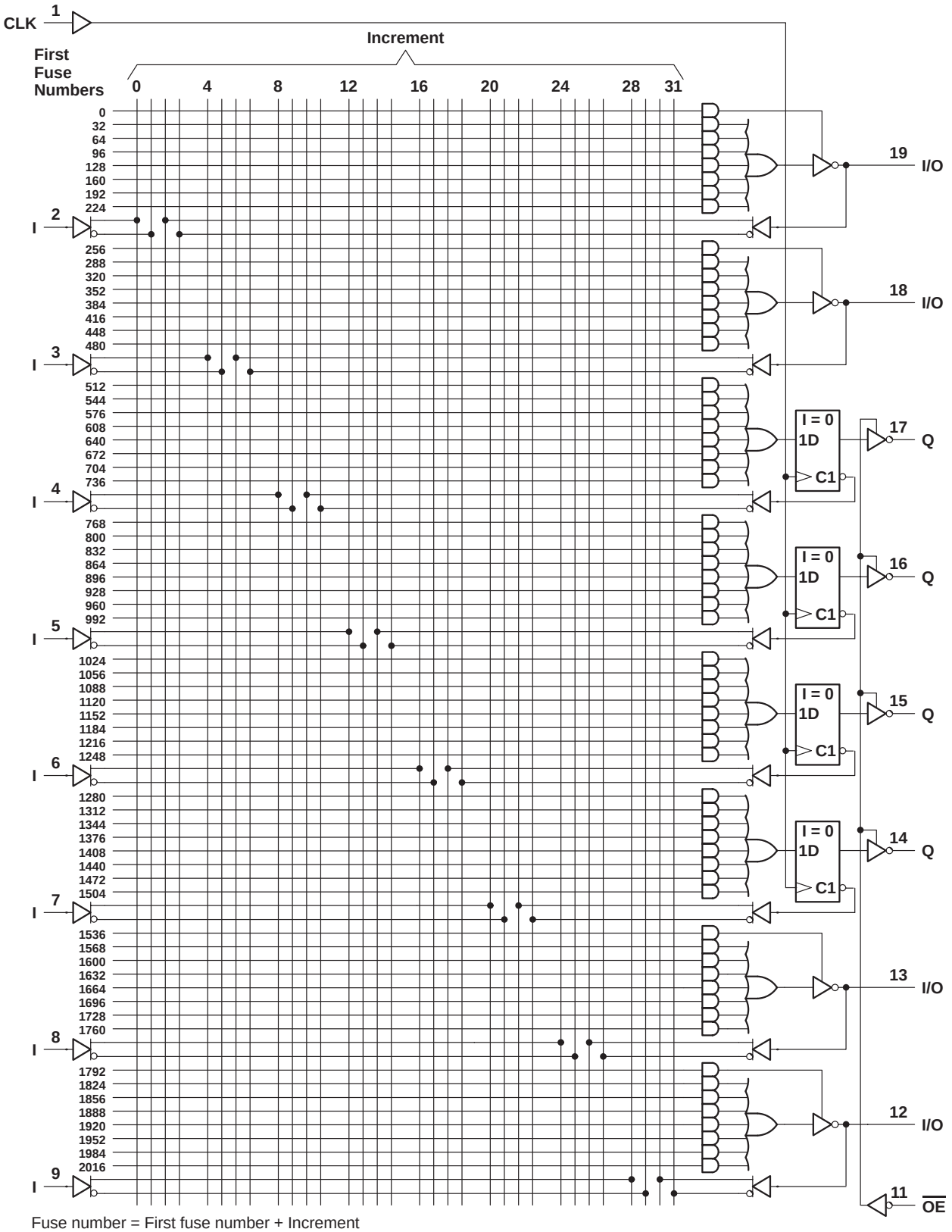

Fuse number = First fuse number + Increment

logic diagram (positive logic)

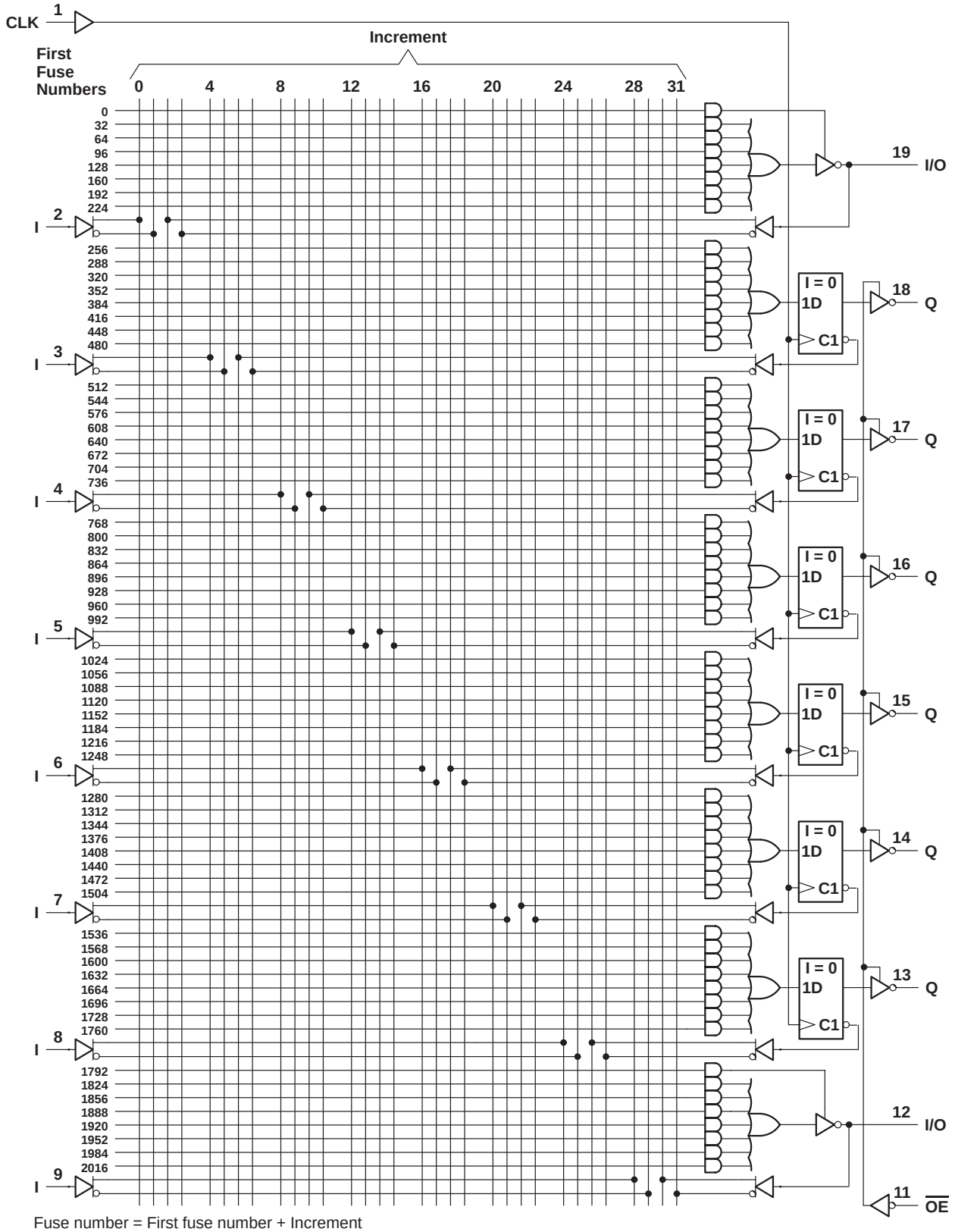

Fuse number = First fuse number + Increment

logic diagram (positive logic)

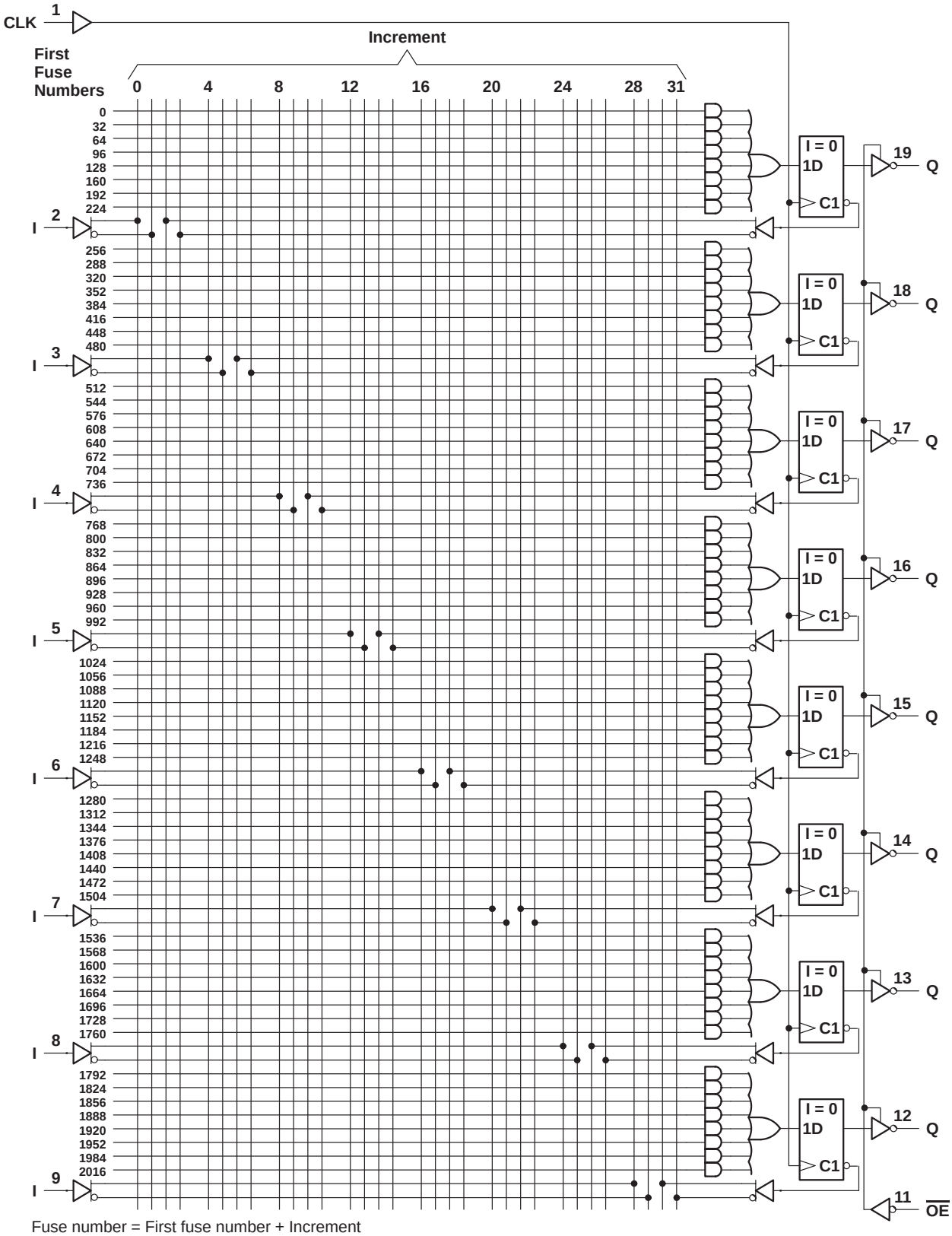

Fuse number = First fuse number + Increment

programming information

Texas Instruments programmable logic devices can be programmed using widely available software and inexpensive device programmers.

Complete programming specifications, algorithms, and the latest information on hardware, software, and firmware are available upon request. Information on programmers capable of programming Texas Instruments programmable logic is also available, upon request, from the nearest TI field sales office, local authorized TI distributor, or by calling Texas Instruments at (214) 997-5666.

absolute maximum ratings over operating free-air temperature range (unless otherwise noted)

Supply voltage, V_{CC} (see Note 1) . . . . . 7 V
Input voltage (see Note 1) . . . . . 5.5 V
Voltage applied to disabled output (see Note 1) . . . . . 5.5 V
Operating free-air temperature range . . . . . –55°C to 125°C
Storage temperature range . . . . . –65°C to 150°C

NOTE 1: These ratings apply except for programming pins during a programming cycle.

recommended operating conditions

		MIN	NOM	MAX	UNIT
V_{CC}	Supply voltage	4.5	5	5.5	V
V_{IH}	High-level input voltage	2		5.5	V
V_{IL}	Low-level input voltage			0.8	V
I_{OH}	High-level output current			–2	mA
I_{OL}	Low-level output current			12	mA
T_A	Operating free-air temperature	–55	25	125	°C

electrical characteristics over recommended operating free-air temperature range

PARAMETER		TEST CONDITIONS			MIN	TYP†	MAX	UNIT
V_{IK}		V_{CC} = 4.5 V,	I_I = –18 mA				–1.5	V
V_{OH}		V_{CC} = 4.5 V,	I_{OH} = –2 mA		2.4	3.2		V
V_{OL}		V_{CC} = 4.5 V,	I_{OL} = 12 mA			0.25	0.4	V
I_{OZH}	Outputs	V_{CC} = 5.5 V,	V_O = 2.7 V				20	μA
	I/O ports						100	
I_{OZL}	Outputs	V_{CC} = 5.5 V,	V_O = 0.4 V				–20	μA
	I/O ports						–100	
I_I		V_{CC} = 5.5 V,	V_I = 5.5 V				0.2	mA
I_{IH}	I/O Ports	V_{CC} = 5.5 V,	V_I = 2.7 V				100	μA
	All others						25	
I_{IL}	$\overline{OE}$ input	V_{CC} = 5.5 V,	V_I = 0.4 V				–0.2	mA
	All others						–0.1	
I_{OS}‡		V_{CC} = 5.5 V,	V_O = 0.5 V		–30		–250	mA
I_{CC}		V_{CC} = 5.5 V,	V_I = 0,	Outputs open		75	180	mA

timing requirements

			MIN	MAX	UNIT
f_{clock}	Clock Frequency		0	25	MHz
t_w	Pulse duration (see Note 2)	Clock high	15		ns
		Clock low	20		
t_{su}	Setup time, input or feedback before CLK↑		25		ns
t_h	Hold time, input or feedback after CLK↑		0		ns

NOTE 2: The total clock period of clock high and clock low must not exceed clock frequency, f_{clock}. The minimum pulse durations specified are only for clock high or low, but not for both simultaneously.

switching characteristics over recommended ranges of supply voltage and operating free-air temperature (unless otherwise noted)

PARAMETER	FROM (INPUT)	TO (OUTPUT)	TEST CONDITION	MIN	TYP†	MAX	UNIT
f_{max}			R1 = 390 Ω, R2 = 750 Ω, See Figure 1	25	45		MHz
t_{pd}	I, I/O	O, I/O			15	30	ns
t_{pd}	CLK↑	Q			10	20	ns
t_{en}	$\overline{OE}$↓	Q			15	25	ns
t_{dis}	$\overline{OE}$↑	Q			10	25	ns
t_{en}	I, I/O	O, I/O			14	30	ns
t_{dis}	I, I/O	O, I/O			13	30	ns

† All typical values are at V_{CC} = 5 V, T_A = 25°C.
‡ Not more than one output should be shorted at a time and the duration of the short circuit should not exceed one second. Set V_O at 0.5 V to avoid test equipment degradation.

electrical characteristics over recommended operating free-air temperature range

PARAMETER		TEST CONDITIONS			MIN	TYP†	MAX	UNIT
V_{IK}		V_{CC} = 4.5 V,	I_I = –18 mA				–1.5	V
V_{OH}		V_{CC} = 4.5 V,	I_{OH} = –2 mA		2.4	3.2		V
V_{OL}		V_{CC} = 4.5 V,	I_{OL} = 12 mA			0.25	0.4	V
I_{OZH}	Outputs	V_{CC} = 5.5 V,	V_O = 2.7 V				20	μA
	I/O ports						100	
I_{OZL}	Outputs	V_{CC} = 5.5 V,	V_O = 0.4 V				–20	μA
	I/O ports						–100	
I_I		V_{CC} = 5.5 V,	V_I = 5.5 V				0.2	mA
I_{IH}	I/O Ports	V_{CC} = 5.5 V,	V_I = 2.7 V				100	μA
	All others						25	
I_{IL}	$\overline{OE}$ input	V_{CC} = 5.5 V,	V_I = 0.4 V				–0.2	mA
	All others						–0.1	
I_{OS}‡		V_{CC} = 5.5 V,	V_O = 0.5 V		–30		–250	mA
I_{CC}		V_{CC} = 5.5 V,	V_I = 0,	Outputs open		75	90	mA

timing requirements

			MIN	MAX	UNIT
f_{clock}	Clock Frequency		0	16	MHz
t_w	Pulse duration (see Note 2)	Clock high	25		ns
		Clock low	25		
t_{su}	Setup time, input or feedback before CLK↑		35		ns
t_h	Hold time, input or feedback after CLK↑		0		ns

NOTE 2: The total clock period of clock high and clock low must not exceed clock frequency, f_{clock}. The minimum pulse durations specified are only for clock high or low, but not for both simultaneously.

switching characteristics over recommended ranges of supply voltage and operating free-air temperature (unless otherwise noted)

PARAMETER	FROM (INPUT)	TO (OUTPUT)	TEST CONDITION	MIN	TYP†	MAX	UNIT
f_{max}			R1 = 390 Ω, R2 = 750 Ω, See Figure 1	16	25		MHz
t_{pd}	I, I/O	O, I/O			25	40	ns
t_{pd}	CLK↑	Q			11	25	ns
t_{en}	$\overline{OE}$↓	Q			20	25	ns
t_{dis}	$\overline{OE}$↑	Q			11	25	ns
t_{en}	I, I/O	O, I/O			25	40	ns
t_{dis}	I, I/O	O, I/O			25	35	ns

† All typical values are at V_{CC} = 5 V, T_A = 25°C.
‡ Not more than one output should be shorted at a time and the duration of the short circuit should not exceed one second. Set V_O at 0.5 V to avoid test equipment degradation.

PARAMETER MEASUREMENT INFORMATION

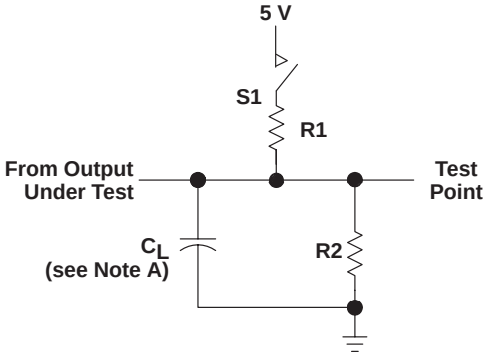

LOAD CIRCUIT FOR 3-STATE OUTPUTS

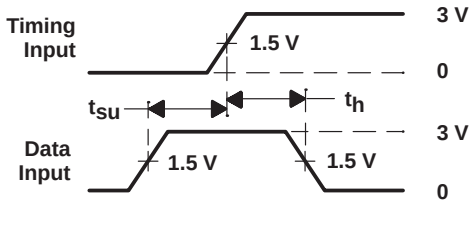

VOLTAGE WAVEFORMS SETUP AND HOLD TIMES

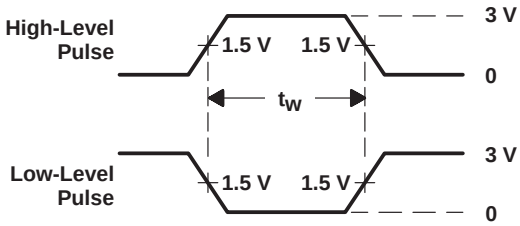

VOLTAGE WAVEFORMS PULSE DURATIONS

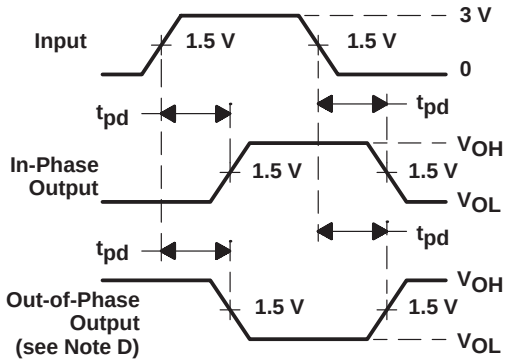

VOLTAGE WAVEFORMS PROPAGATION DELAY TIMES

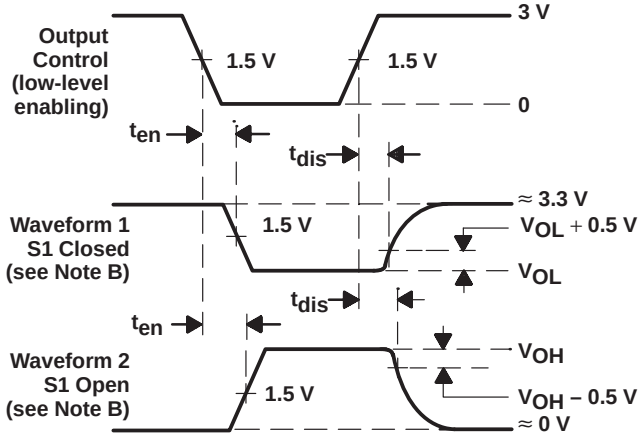

VOLTAGE WAVEFORMS ENABLE AND DISABLE TIMES, 3-STATE OUTPUTS

NOTES: A. C_L includes probe and jig capacitance and is 50 pF for t_{pd} and t_{en}, 5 pF for t_{dis}.
B. Waveform 1 is for an output with internal conditions such that the output is low except when disabled by the output control. Waveform 2 is for an output with internal conditions such that the output is high except when disabled by the output control.
C. All input pulses have the following characteristics: PRR ≤ 10 MHz, t_r and t_f ≤ 2 ns, duty cycle = 50%
D. When measuring propagation delay times of 3-state outputs, switch S1 is closed.
E. Equivalent loads may be used for testing.

Figure 1. Load Circuit and Voltage Waveforms

PACKAGING INFORMATION

Orderable part number	Status (1)	Material type (2)	Package | Pins	Package qty | Carrier	RoHS (3)	Lead finish/ Ball material (4)	MSL rating/ Peak reflow (5)	Op temp (°C)	Part marking (6)
81036072A	Active	Production	LCCC (FK) | 20	55 | TUBE	No	SNPB	N/A for Pkg Type	-55 to 125	81036072A PAL16L8A MFKB
8103607RA	Active	Production	CDIP (J) | 20	20 | TUBE	No	SNPB	N/A for Pkg Type	-55 to 125	8103607RA PAL16L8AMJB
8103607SA	Active	Production	CFP (W) | 20	25 | TUBE	No	SNPB	N/A for Pkg Type	-55 to 125	8103607SA PAL16L8AMWB
81036082A	Active	Production	LCCC (FK) | 20	55 | TUBE	No	SNPB	N/A for Pkg Type	-55 to 125	81036082A PAL16R8A MFKB
8103608RA	Active	Production	CDIP (J) | 20	20 | TUBE	No	SNPB	N/A for Pkg Type	-55 to 125	8103608RA PAL16R8AMJB
81036092A	Active	Production	LCCC (FK) | 20	55 | TUBE	No	SNPB	N/A for Pkg Type	-55 to 125	81036092A PAL16R6A MFKB
8103609RA	Active	Production	CDIP (J) | 20	20 | TUBE	No	SNPB	N/A for Pkg Type	-55 to 125	8103609RA PAL16R6AMJB
81036102A	Active	Production	LCCC (FK) | 20	55 | TUBE	No	SNPB	N/A for Pkg Type	-55 to 125	81036102A PAL16R4A MFKB
8103610RA	Active	Production	CDIP (J) | 20	20 | TUBE	No	SNPB	N/A for Pkg Type	-55 to 125	8103610RA PAL16R4AMJB
8103610SA	Active	Production	CFP (W) | 20	25 | TUBE	No	SNPB	N/A for Pkg Type	-55 to 125	8103610SA PAL16R4AMWB
81036112A	Active	Production	LCCC (FK) | 20	55 | TUBE	No	SNPB	N/A for Pkg Type	-55 to 125	81036112A PAL16L8A-2MFKB
8103611RA	Active	Production	CDIP (J) | 20	20 | TUBE	No	SNPB	N/A for Pkg Type	-55 to 125	8103611RA PAL16L8A-2MJB
81036142A	Active	Production	LCCC (FK) | 20	55 | TUBE	No	SNPB	N/A for Pkg Type	-55 to 125	81036142A PAL16R4A-2MFKB

Orderable part number	Status (1)	Material type (2)	Package | Pins	Package qty | Carrier	RoHS (3)	Lead finish/ Ball material (4)	MSL rating/ Peak reflow (5)	Op temp (°C)	Part marking (6)
PAL16L8A-2MFKB	Active	Production	LCCC (FK) | 20	55 | TUBE	No	SNPB	N/A for Pkg Type	-55 to 125	81036112A PAL16L8A-2MFKB
PAL16L8A-2MFKB.A	Active	Production	LCCC (FK) | 20	55 | TUBE	No	SNPB	N/A for Pkg Type	-55 to 125	81036112A PAL16L8A-2MFKB
PAL16L8A-2MJ	Active	Production	CDIP (J) | 20	20 | TUBE	No	SNPB	N/A for Pkg Type	-55 to 125	PAL16L8A-2MJ
PAL16L8A-2MJ.A	Active	Production	CDIP (J) | 20	20 | TUBE	No	SNPB	N/A for Pkg Type	-55 to 125	PAL16L8A-2MJ
PAL16L8A-2MJB	Active	Production	CDIP (J) | 20	20 | TUBE	No	SNPB	N/A for Pkg Type	-55 to 125	8103611RA PAL16L8A-2MJB
PAL16L8A-2MJB.A	Active	Production	CDIP (J) | 20	20 | TUBE	No	SNPB	N/A for Pkg Type	-55 to 125	8103611RA PAL16L8A-2MJB
PAL16L8AMFKB	Active	Production	LCCC (FK) | 20	55 | TUBE	No	SNPB	N/A for Pkg Type	-55 to 125	81036072A PAL16L8A MFKB
PAL16L8AMFKB.A	Active	Production	LCCC (FK) | 20	55 | TUBE	No	SNPB	N/A for Pkg Type	-55 to 125	81036072A PAL16L8A MFKB
PAL16L8AMJ	Active	Production	CDIP (J) | 20	20 | TUBE	No	SNPB	N/A for Pkg Type	-55 to 125	PAL16L8AMJ
PAL16L8AMJ.A	Active	Production	CDIP (J) | 20	20 | TUBE	No	SNPB	N/A for Pkg Type	-55 to 125	PAL16L8AMJ
PAL16L8AMJB	Active	Production	CDIP (J) | 20	20 | TUBE	No	SNPB	N/A for Pkg Type	-55 to 125	8103607RA PAL16L8AMJB
PAL16L8AMJB.A	Active	Production	CDIP (J) | 20	20 | TUBE	No	SNPB	N/A for Pkg Type	-55 to 125	8103607RA PAL16L8AMJB
PAL16L8AMWB	Active	Production	CFP (W) | 20	25 | TUBE	No	SNPB	N/A for Pkg Type	-55 to 125	8103607SA PAL16L8AMWB
PAL16L8AMWB.A	Active	Production	CFP (W) | 20	25 | TUBE	No	SNPB	N/A for Pkg Type	-55 to 125	8103607SA PAL16L8AMWB
PAL16R4A-2MFKB	Active	Production	LCCC (FK) | 20	55 | TUBE	No	SNPB	N/A for Pkg Type	-55 to 125	81036142A PAL16R4A-2MFKB
PAL16R4A-2MFKB.A	Active	Production	LCCC (FK) | 20	55 | TUBE	No	SNPB	N/A for Pkg Type	-55 to 125	81036142A PAL16R4A-2MFKB
PAL16R4A-2MJ	NRND	Production	CDIP (J) | 20	20 | TUBE	No	SNPB	N/A for Pkg Type	-55 to 125	PAL16R4A-2MJ

Orderable part number	Status (1)	Material type (2)	Package | Pins	Package qty | Carrier	RoHS (3)	Lead finish/ Ball material (4)	MSL rating/ Peak reflow (5)	Op temp (°C)	Part marking (6)
PAL16R4A-2MJ.A	NRND	Production	CDIP (J) | 20	20 | TUBE	No	SNPB	N/A for Pkg Type	-55 to 125	PAL16R4A-2MJ
PAL16R4AMFKB	Active	Production	LCCC (FK) | 20	55 | TUBE	No	SNPB	N/A for Pkg Type	-55 to 125	81036102A PAL16R4A MFKB
PAL16R4AMFKB.A	Active	Production	LCCC (FK) | 20	55 | TUBE	No	SNPB	N/A for Pkg Type	-55 to 125	81036102A PAL16R4A MFKB
PAL16R4AMJ	Active	Production	CDIP (J) | 20	20 | TUBE	No	SNPB	N/A for Pkg Type	-55 to 125	PAL16R4AMJ
PAL16R4AMJ.A	Active	Production	CDIP (J) | 20	20 | TUBE	No	SNPB	N/A for Pkg Type	-55 to 125	PAL16R4AMJ
PAL16R4AMJB	Active	Production	CDIP (J) | 20	20 | TUBE	No	SNPB	N/A for Pkg Type	-55 to 125	8103610RA PAL16R4AMJB
PAL16R4AMJB.A	Active	Production	CDIP (J) | 20	20 | TUBE	No	SNPB	N/A for Pkg Type	-55 to 125	8103610RA PAL16R4AMJB
PAL16R4AMWB	Active	Production	CFP (W) | 20	25 | TUBE	No	SNPB	N/A for Pkg Type	-55 to 125	8103610SA PAL16R4AMWB
PAL16R4AMWB.A	Active	Production	CFP (W) | 20	25 | TUBE	No	SNPB	N/A for Pkg Type	-55 to 125	8103610SA PAL16R4AMWB
PAL16R6AMFKB	Active	Production	LCCC (FK) | 20	55 | TUBE	No	SNPB	N/A for Pkg Type	-55 to 125	81036092A PAL16R6A MFKB
PAL16R6AMFKB.A	Active	Production	LCCC (FK) | 20	55 | TUBE	No	SNPB	N/A for Pkg Type	-55 to 125	81036092A PAL16R6A MFKB
PAL16R6AMJ	Active	Production	CDIP (J) | 20	20 | TUBE	No	SNPB	N/A for Pkg Type	-55 to 125	PAL16R6AMJ
PAL16R6AMJ.A	Active	Production	CDIP (J) | 20	20 | TUBE	No	SNPB	N/A for Pkg Type	-55 to 125	PAL16R6AMJ
PAL16R6AMJB	Active	Production	CDIP (J) | 20	20 | TUBE	No	SNPB	N/A for Pkg Type	-55 to 125	8103609RA PAL16R6AMJB
PAL16R6AMJB.A	Active	Production	CDIP (J) | 20	20 | TUBE	No	SNPB	N/A for Pkg Type	-55 to 125	8103609RA PAL16R6AMJB
PAL16R8AMFKB	Active	Production	LCCC (FK) | 20	55 | TUBE	No	SNPB	N/A for Pkg Type	-55 to 125	81036082A PAL16R8A MFKB
PAL16R8AMFKB.A	Active	Production	LCCC (FK) | 20	55 | TUBE	No	SNPB	N/A for Pkg Type	-55 to 125	81036082A PAL16R8A MFKB

Orderable part number	Status (1)	Material type (2)	Package | Pins	Package qty | Carrier	RoHS (3)	Lead finish/ Ball material (4)	MSL rating/ Peak reflow (5)	Op temp (°C)	Part marking (6)
PAL16R8AMJ	Active	Production	CDIP (J) | 20	20 | TUBE	No	SNPB	N/A for Pkg Type	-55 to 125	PAL16R8AMJ
PAL16R8AMJ.A	Active	Production	CDIP (J) | 20	20 | TUBE	No	SNPB	N/A for Pkg Type	-55 to 125	PAL16R8AMJ
PAL16R8AMJB	Active	Production	CDIP (J) | 20	20 | TUBE	No	SNPB	N/A for Pkg Type	-55 to 125	8103608RA PAL16R8AMJB
PAL16R8AMJB.A	Active	Production	CDIP (J) | 20	20 | TUBE	No	SNPB	N/A for Pkg Type	-55 to 125	8103608RA PAL16R8AMJB

(1) **Status:** For more details on status, see our product life cycle.

(2) **Material type:** When designated, preproduction parts are prototypes/experimental devices, and are not yet approved or released for full production. Testing and final process, including without limitation quality assurance, reliability performance testing, and/or process qualification, may not yet be complete, and this item is subject to further changes or possible discontinuation. If available for ordering, purchases will be subject to an additional waiver at checkout, and are intended for early internal evaluation purposes only. These items are sold without warranties of any kind.

(3) **RoHS values:** Yes, No, RoHS Exempt. See the TI RoHS Statement for additional information and value definition.

(4) **Lead finish/Ball material:** Parts may have multiple material finish options. Finish options are separated by a vertical ruled line. Lead finish/Ball material values may wrap to two lines if the finish value exceeds the maximum column width.

(5) **MSL rating/Peak reflow:** The moisture sensitivity level ratings and peak solder (reflow) temperatures. In the event that a part has multiple moisture sensitivity ratings, only the lowest level per JEDEC standards is shown. Refer to the shipping label for the actual reflow temperature that will be used to mount the part to the printed circuit board.

(6) **Part marking:** There may be an additional marking, which relates to the logo, the lot trace code information, or the environmental category of the part.

Multiple part markings will be inside parentheses. Only one part marking contained in parentheses and separated by a "~" will appear on a part. If a line is indented then it is a continuation of the previous line and the two combined represent the entire part marking for that device.

Important Information and Disclaimer: The information provided on this page represents TI's knowledge and belief as of the date that it is provided. TI bases its knowledge and belief on information provided by third parties, and makes no representation or warranty as to the accuracy of such information. Efforts are underway to better integrate information from third parties. TI has taken and continues to take reasonable steps to provide representative and accurate information but may not have conducted destructive testing or chemical analysis on incoming materials and chemicals. TI and TI suppliers consider certain information to be proprietary, and thus CAS numbers and other limited information may not be available for release.

In no event shall TI's liability arising out of such information exceed the total purchase price of the TI part(s) at issue in this document sold by TI to Customer on an annual basis.

OTHER QUALIFIED VERSIONS OF PAL16L8A-2M, PAL16L8AM, PAL16R6AM, PAL16R8AM :

- Catalog : PAL16L8A-2, PAL16L8A, PAL16R6A, PAL16R8A

NOTE: Qualified Version Definitions:

- Catalog - TI's standard catalog product

TUBE

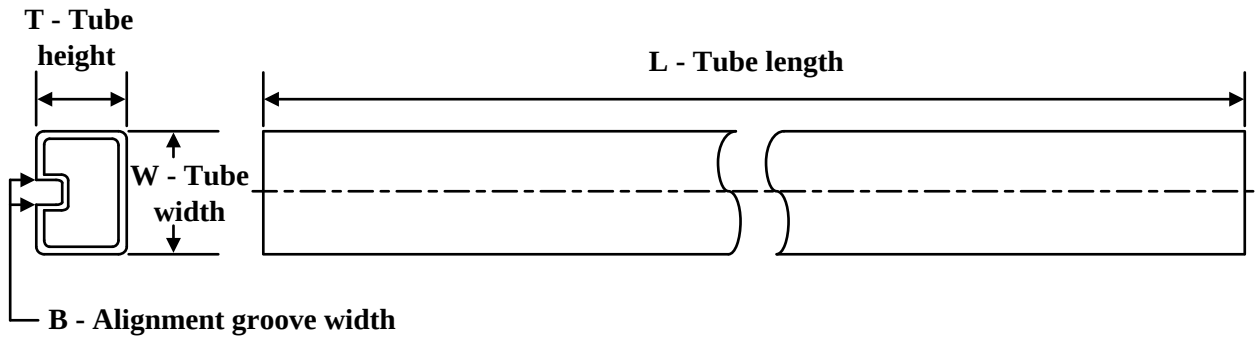

*All dimensions are nominal

Device	Package Name	Package Type	Pins	SPQ	L (mm)	W (mm)	T (µm)	B (mm)
81036072A	FK	LCCC	20	55	506.98	12.06	2030	NA
8103607SA	W	CFP	20	25	506.98	26.16	6220	NA
81036082A	FK	LCCC	20	55	506.98	12.06	2030	NA
81036092A	FK	LCCC	20	55	506.98	12.06	2030	NA
81036102A	FK	LCCC	20	55	506.98	12.06	2030	NA
8103610SA	W	CFP	20	25	506.98	26.16	6220	NA
81036112A	FK	LCCC	20	55	506.98	12.06	2030	NA
81036142A	FK	LCCC	20	55	506.98	12.06	2030	NA
PAL16L8A-2MFKB	FK	LCCC	20	55	506.98	12.06	2030	NA
PAL16L8A-2MFKB.A	FK	LCCC	20	55	506.98	12.06	2030	NA
PAL16L8AMFKB	FK	LCCC	20	55	506.98	12.06	2030	NA
PAL16L8AMFKB.A	FK	LCCC	20	55	506.98	12.06	2030	NA
PAL16L8AMWB	W	CFP	20	25	506.98	26.16	6220	NA
PAL16L8AMWB.A	W	CFP	20	25	506.98	26.16	6220	NA
PAL16R4A-2MFKB	FK	LCCC	20	55	506.98	12.06	2030	NA
PAL16R4A-2MFKB.A	FK	LCCC	20	55	506.98	12.06	2030	NA
PAL16R4AMFKB	FK	LCCC	20	55	506.98	12.06	2030	NA
PAL16R4AMFKB.A	FK	LCCC	20	55	506.98	12.06	2030	NA
PAL16R4AMWB	W	CFP	20	25	506.98	26.16	6220	NA
PAL16R4AMWB.A	W	CFP	20	25	506.98	26.16	6220	NA
PAL16R6AMFKB	FK	LCCC	20	55	506.98	12.06	2030	NA
PAL16R6AMFKB.A	FK	LCCC	20	55	506.98	12.06	2030	NA
PAL16R8AMFKB	FK	LCCC	20	55	506.98	12.06	2030	NA
PAL16R8AMFKB.A	FK	LCCC	20	55	506.98	12.06	2030	NA

J (R–GDIP–T**)

14 LEADS SHOWN

CERAMIC DUAL IN–LINE PACKAGE

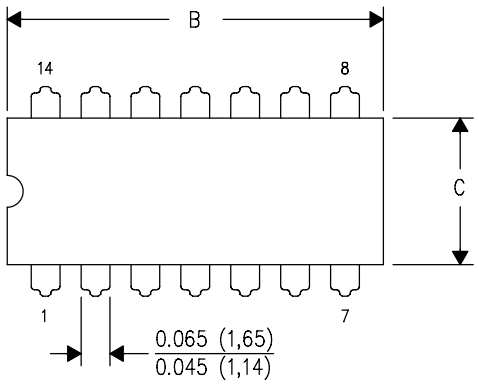

DIM \ PINS **	14	16	18	20
A	0.300 (7,62) BSC	0.300 (7,62) BSC	0.300 (7,62) BSC	0.300 (7,62) BSC
B MAX	0.785 (19,94)	.840 (21,34)	0.960 (24,38)	1.060 (26,92)
B MIN	—	—	—	—
C MAX	0.300 (7,62)	0.300 (7,62)	0.310 (7,87)	0.300 (7,62)
C MIN	0.245 (6,22)	0.245 (6,22)	0.220 (5,59)	0.245 (6,22)

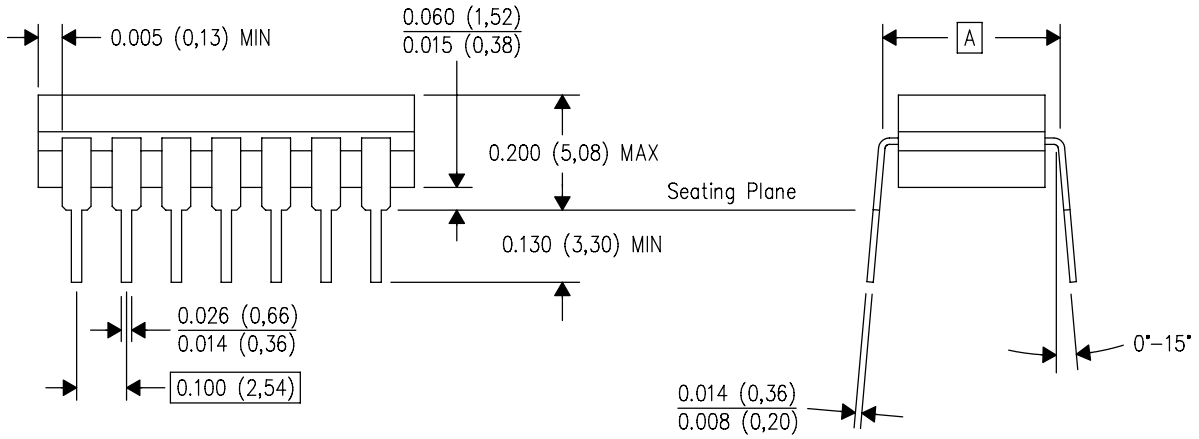

4040083/F 03/03

NOTES:
A. All linear dimensions are in inches (millimeters).
B. This drawing is subject to change without notice.
C. This package is hermetically sealed with a ceramic lid using glass frit.
D. Index point is provided on cap for terminal identification only on press ceramic glass frit seal only.
E. Falls within MIL STD 1835 GDIP1–T14, GDIP1–T16, GDIP1–T18 and GDIP1–T20.

GENERIC PACKAGE VIEW

FK 20

LCCC - 2.03 mm max height

8.89 x 8.89, 1.27 mm pitch

LEADLESS CERAMIC CHIP CARRIER

This image is a representation of the package family, actual package may vary.
Refer to the product data sheet for package details.

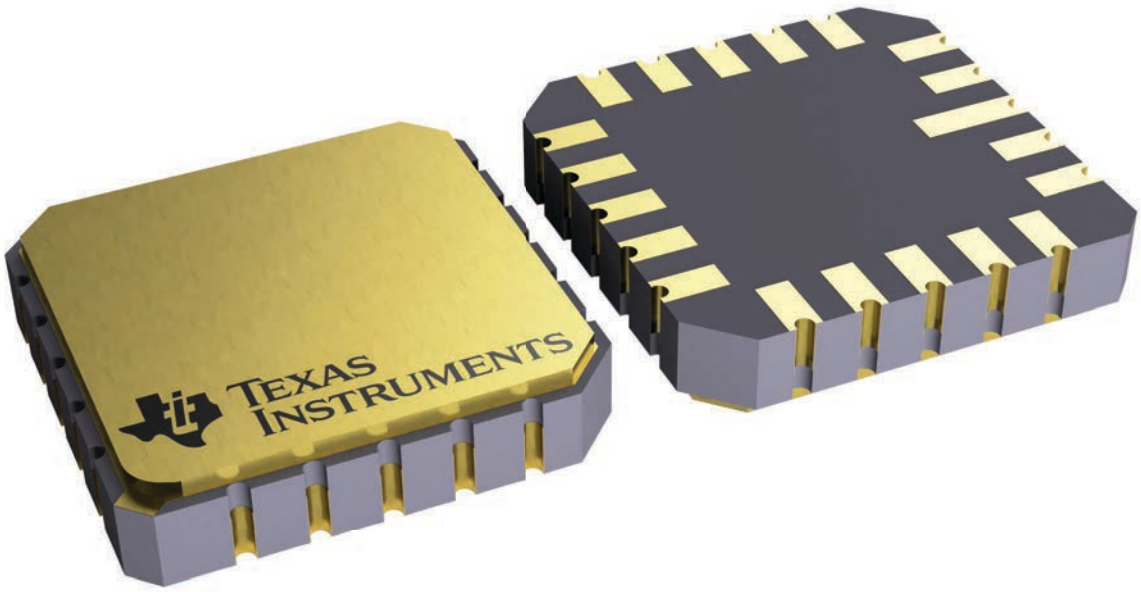

4229370VA\

W (R–GDFP–F20) CERAMIC DUAL FLATPACK

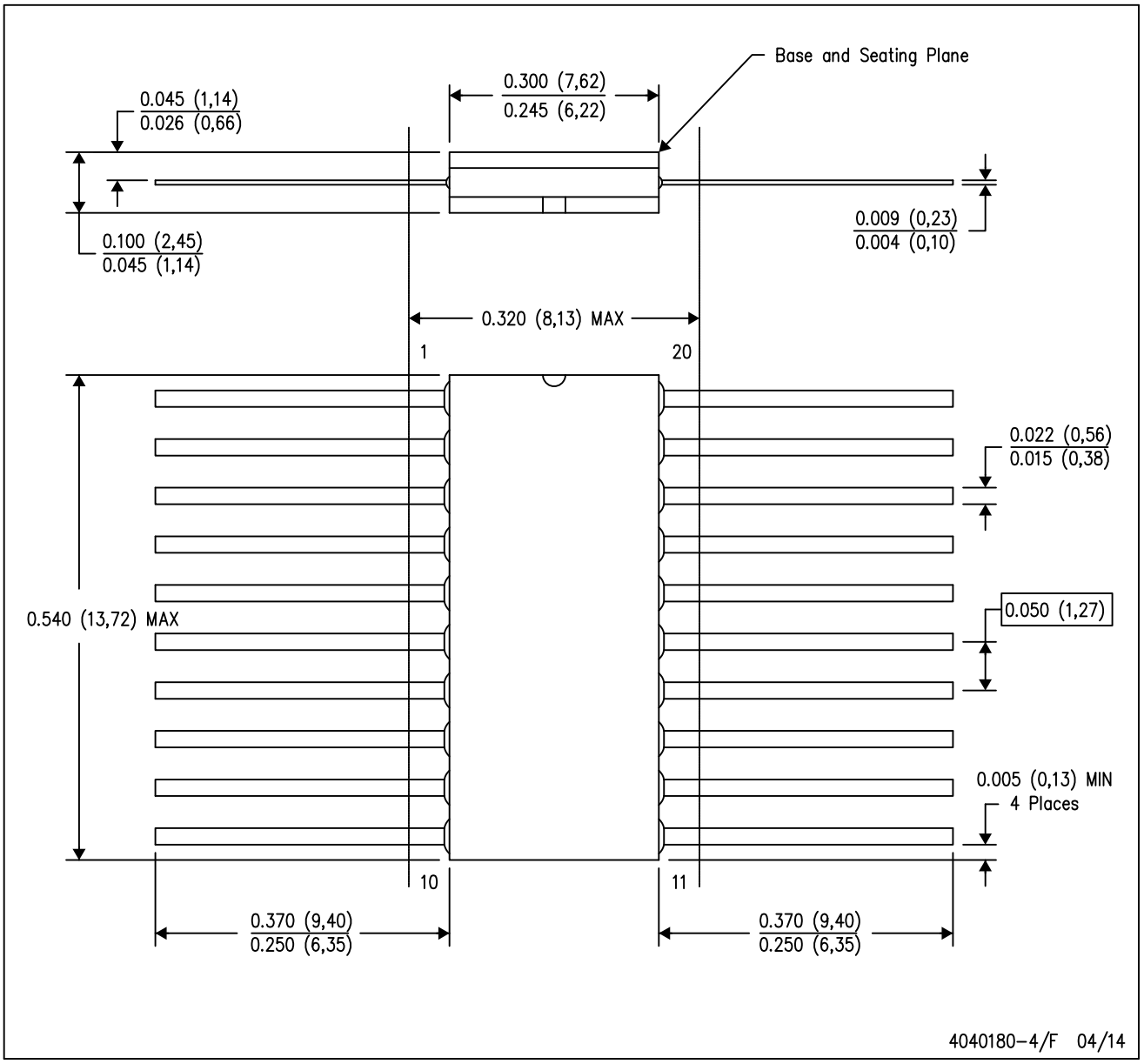

NOTES:
A. All linear dimensions are in inches (millimeters).
B. This drawing is subject to change without notice.
C. This package can be hermetically sealed with a ceramic lid using glass frit.
D. Index point is provided on cap for terminal identification only.
E. Falls within Mil–Std 1835 GDFP2–F20

IMPORTANT NOTICE AND DISCLAIMER

TI PROVIDES TECHNICAL AND RELIABILITY DATA (INCLUDING DATASHEETS), DESIGN RESOURCES (INCLUDING REFERENCE DESIGNS), APPLICATION OR OTHER DESIGN ADVICE, WEB TOOLS, SAFETY INFORMATION, AND OTHER RESOURCES “AS IS” AND WITH ALL FAULTS, AND DISCLAIMS ALL WARRANTIES, EXPRESS AND IMPLIED, INCLUDING WITHOUT LIMITATION ANY IMPLIED WARRANTIES OF MERCHANTABILITY, FITNESS FOR A PARTICULAR PURPOSE OR NON-INFRINGEMENT OF THIRD PARTY INTELLECTUAL PROPERTY RIGHTS.

These resources are intended for skilled developers designing with TI products. You are solely responsible for (1) selecting the appropriate TI products for your application, (2) designing, validating and testing your application, and (3) ensuring your application meets applicable standards, and any other safety, security, regulatory or other requirements.

These resources are subject to change without notice. TI grants you permission to use these resources only for development of an application that uses the TI products described in the resource. Other reproduction and display of these resources is prohibited. No license is granted to any other TI intellectual property right or to any third party intellectual property right. TI disclaims responsibility for, and you fully indemnify TI and its representatives against any claims, damages, costs, losses, and liabilities arising out of your use of these resources.

TI’s products are provided subject to TI’s Terms of Sale, TI’s General Quality Guidelines, or other applicable terms available either on ti.com or provided in conjunction with such TI products. TI’s provision of these resources does not expand or otherwise alter TI’s applicable warranties or warranty disclaimers for TI products. Unless TI explicitly designates a product as custom or customer-specified, TI products are standard, catalog, general purpose devices.

TI objects to and rejects any additional or different terms you may propose.

Copyright © 2026, Texas Instruments Incorporated

Last updated 10/2025