PCF8574 Remote 8-Bit I/O Expander for I²C Bus

1 Features

- Low standby-current consumption of 10µA max
- I²C to parallel-port expander
- Open-drain interrupt output
- Compatible with most microcontrollers
- Latched outputs with high-current drive capability for directly driving LEDs
- Latch-up performance exceeds 100mA per JESD 78, Class II

2 Applications

- Telecom shelters: filter units
- Servers
- Routers (telecom switching equipment)
- Personal computers
- Personal electronics
- Industrial automation
- Products with GPIO-limited processors

3 Description

This 8-bit input/output (I/O) expander for the two-line bidirectional bus (I²C) is designed for 2.5V to 6V V_{CC} operation.

The PCF8574 device provides general-purpose remote I/O expansion for most microcontroller families by way of the I²C interface [serial clock (SCL), serial data (SDA)].

The device features an 8-bit quasi-bidirectional I/O port (P0–P7), including latched outputs with high-current drive capability for directly driving LEDs. Each quasi-bidirectional I/O can be used as an input or output without the use of a data-direction control signal. At power on, the I/Os are high. In this mode, only a current source to V_{CC} is active.

Package Information

PART NUMBER	PACKAGE (1)	PACKAGE SIZE(2)
PCF8574	TVSOP (DGV, 20)	5mm × 6.40mm
	SOIC (DW, 16)	10.3mm × 10.3mm
	PDIP (N, 16)	19.3mm × 9.4mm
	TSSOP (PW,20)	6.5mm × 6.4mm
	VQFN (RGT, 16)	3mm × 3mm
	VQFN (RGY, 20)	4.5mm × 3.5mm

(1) For more information, see Section 11.
(2) The package size (length × width) is a nominal value and includes pins, where applicable.

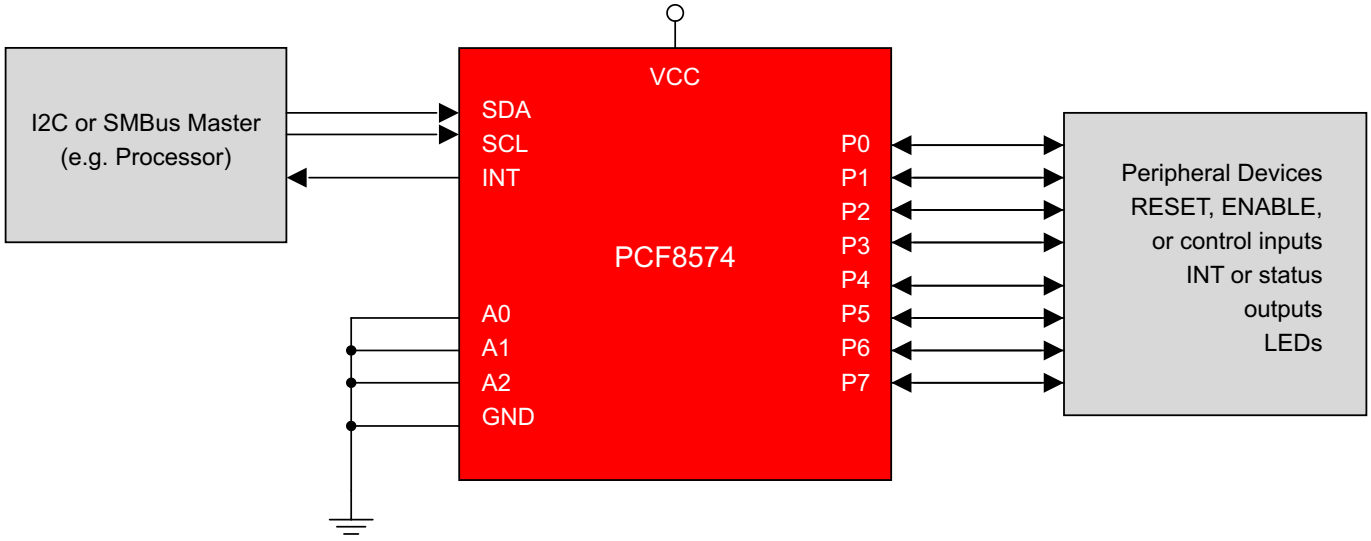

Simplified Schematic

An IMPORTANT NOTICE at the end of this data sheet addresses availability, warranty, changes, use in safety-critical applications, intellectual property matters and other important disclaimers. PRODUCTION DATA.

Table of Contents

1 Features....1
2 Applications....1
3 Description....1
4 Pin Configuration and Functions....3
5 Specifications....4
5.1 Absolute Maximum Ratings....4
5.2 ESD Ratings....4
5.3 Recommended Operating Conditions....4
5.4 Thermal Information....4
5.5 Electrical Characteristics....5
5.6 I^2C Interface Timing Requirements....5
5.7 Switching Characteristics....6
5.8 Typical Characteristics....7
6 Parameter Measurement Information....9
7 Detailed Description....12
7.1 Overview....12
7.2 Functional Block Diagram....12
7.3 Feature Description....13
7.4 Device Functional Modes....14
8 Application and Implementation....16
8.1 Application Information....16
8.2 Typical Application....16
8.3 Power Supply Recommendations....18
8.4 Layout....20
9 Device and Documentation Support....22
9.1 Documentation Support....22
9.2 Receiving Notification of Documentation Updates....22
9.3 Support Resources....22
9.4 Trademarks....22
9.5 Electrostatic Discharge Caution....22
9.6 Glossary....22
10 Revision History....22
11 Mechanical, Packaging, and Orderable Information....23

Copyright © 2024 Texas Instruments Incorporated

4 Pin Configuration and Functions

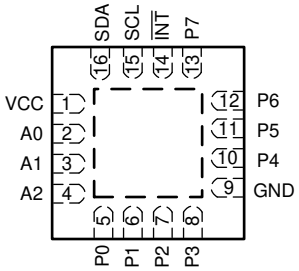

Figure 4-1. RGT Package, 16 Pins (Top View)

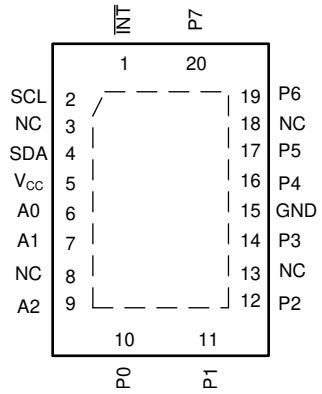

Figure 4-2. RGY Package, 20 Pins (Top View)

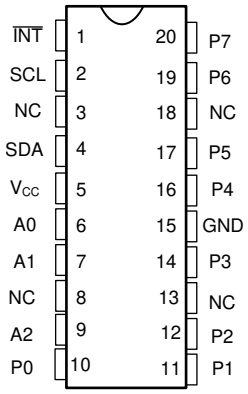

Figure 4-3. DGV or PW Package, 20 Pins (Top View)

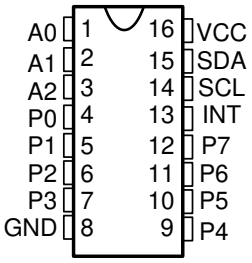

Figure 4-4. DW or N Package, 20 Pins, Top View

Table 4-1. Pin Functions

PIN					TYPE	DESCRIPTION
NAME	RGT	RGY	DGV or PW	DW or N		
A [0..2]	2, 3, 4	6, 7, 9	6, 7, 9	1, 2, 3	I	Address inputs 0 through 2. Connect directly to V_{CC} or ground. Pullup resistors are not needed.
GND	9	15	15	8	—	Ground
$\overline{INT}$	14	1	1	13	O	Interrupt output. Connect to V_{CC} through a pullup resistor.
NC	-	3, 8, 13, 18	3, 8, 13, 18	-	—	Do not connect
P[0..7]	5, 6, 7, 8, 10, 11, 12, 13	10, 11, 12, 14, 16, 17, 19, 20	10, 11, 12, 14, 16, 17, 19, 20	4, 5, 6, 7, 9, 10, 11, 12	I/O	P-port input/output. Push-pull design structure.
SCL	15	2	2	14	I	Serial clock line. Connect to V_{CC} through a pullup resistor
SDA	16	4	4	15	I/O	Serial data line. Connect to V_{CC} through a pullup resistor.
V_{CC}	1	5	5	16	—	Voltage supply

Copyright © 2024 Texas Instruments Incorporated

5 Specifications

5.1 Absolute Maximum Ratings

over operating free-air temperature range (unless otherwise noted)(1)

			MIN	MAX	UNIT
V_{CC}	Supply voltage range		–0.5	6.5	V
V_I	Input voltage range(2)		–0.5	V_{CC} + 0.5	V
V_O	Output voltage range(2)		–0.5	V_{CC} + 0.5	V
I_{IK}	Input clamp current	V_I < 0		–20	mA
I_{OK}	Output clamp current	V_O < 0		–20	mA
I_{OK}	Input/output clamp current	V_O < 0 or V_O > V_{CC}		±400	µA
I_{OL}	Continuous output low current	V_O = 0 to V_{CC}		50	mA
I_{OH}	Continuous output high current	V_O = 0 to V_{CC}		–4	mA
	Continuous current through V_{CC} or GND			±100	mA
T_J	Junction temperature			150	°C
T_{stg}	Storage temperature range		–65	150	°C

(1) Stresses beyond those listed under *Absolute Maximum Ratings* may cause permanent damage to the device. These are stress ratings only, and functional operation of the device at these or any other conditions beyond those indicated under Section 5.3 is not implied. Exposure to absolute-maximum-rated conditions for extended periods may affect device reliability.
(2) The input negative-voltage and output voltage ratings may be exceeded if the input and output current ratings are observed.

5.2 ESD Ratings

			VALUE	UNIT
$V_{(ESD)}$	Electrostatic discharge	Human-body model (HBM), per ANSI/ESDA/JEDEC JS-001 (1)	1500	V
		Charged-device model (CDM), per JEDEC specification JESD22-C101 (2)	2000	

(1) JEDEC document JEP155 states that 500-V HBM allows safe manufacturing with a standard ESD control process. Manufacturing with less than 500-V HBM is possible with the necessary precautions.
(2) JEDEC document JEP157 states that 250-V CDM allows safe manufacturing with a standard ESD control process. Manufacturing with less than 250-V CDM is possible with the necessary precautions.

5.3 Recommended Operating Conditions

		MIN	MAX	UNIT
V_{CC}	Supply voltage	2.5	6	V
V_{IH}	High-level input voltage	0.7 × V_{CC}	V_{CC} + 0.5	V
V_{IL}	Low-level input voltage	–0.5	0.3 × V_{CC}	V
I_{OH}	High-level output current		–1	mA
I_{OL}	Low-level output current		25	mA
T_A	Operating free-air temperature	–40	85	°C

5.4 Thermal Information

THERMAL METRIC (1)		PCF8574						UNIT
		DGV	DW	N	PW	RGT	RGY	
		20 PINS	16 PINS	16 PINS	20 PINS	16 PINS	20 PINS	
$R_{\theta JA}$	Junction-to-ambient thermal resistance	92	76.7	73.1	94.8	56.0	52.2	°C/W
$R_{\theta JC(top)}$	Junction-to-case (top) thermal resistance	-	45.1	51.9	40.2	67.4	50.6	°C/W
$R_{\theta JB}$	Junction-to-board thermal resistance	-	45.8	48.3	58.5	31.2	29.2	°C/W
ψ_{JT}	Junction-to-top characterization parameter	-	17.2	29.8	2.8	3.9	3.3	°C/W
ψ_{JB}	Junction-to-board characterization parameter	-	45.2	47.9	58.0	31.1	29.1	°C/W
$R_{\theta JC(bot)}$	Junction-to-case (bottom) thermal resistance	-	n/a	n/a	n/a	15.1	16.0	°C/W

(1) For more information about traditional and new thermal metrics, see the Semiconductor and IC package thermal metrics application report.

Copyright © 2024 Texas Instruments Incorporated

5.5 Electrical Characteristics

over recommended operating free-air temperature range (unless otherwise noted)

		TEST CONDITIONS			VCC	MIN	TYP(1)	MAX	UNIT
V_{IK}	Input diode clamp voltage	I_I = –18 mA			2.5 V to 6 V	–1.2			V
V_{POR}	Power-on reset voltage	$V_I = V_{CC}$ or GND,	I_O = 0		6 V		1.3	2.4	V
I_{OH}	P port	V_O = GND			2.5 V to 6 V	-310		-30	µA
I_{OHT}	P port transient pullup current	High during acknowledge, V_{OH} = GND			2.5 V		–1		mA
I_{OL}	SDA	V_O = 0.4 V			2.5 V to 6 V	3			mA
	P port	V_O = 1 V			5 V	10	25		
	$\overline{INT}$	V_O = 0.4 V			2.5 V to 6 V	1.6			
I_I	SCL, SDA	$V_I = V_{CC}$ or GND			2.5 V to 6 V			±5	µA
	$\overline{INT}$							±5	
	A0, A1, A2							±5	
I_{IHL}	P port	-250mV < Vi < GND			2.5 V to 6 V			±400	µA
I_{CC}	Operating mode	$V_I = V_{CC}$ or GND,	I_O = 0,	f_{SCL} = 100 kHz	6 V		40	100	µA
	Standby mode	$V_I = V_{CC}$ or GND,	I_O = 0				2.5	10	
C_i	SCL	$V_I = V_{CC}$ or GND			2.5 V to 6 V		1.5	7	pF
C_{io}	SDA	$V_{IO} = V_{CC}$ or GND			2.5 V to 6 V		3	7	pF
	P port						4	10	

(1) All typical values are at V_{CC} = 5 V, T_A = 25°C.

5.6 I²C Interface Timing Requirements

over recommended operating free-air temperature range (unless otherwise noted)

			MIN	MAX	UNIT
f_{scl}	I²C clock frequency			100	kHz
t_{sch}	I²C clock high time		4		µs
t_{scl}	I²C clock low time		4.7		µs
t_{sp}	I²C spike time			70	ns
t_{sds}	I²C serial data setup time		250		ns
t_{sdh}	I²C serial data hold time		0		ns
t_{icr}	I²C input rise time			1	µs
t_{icf}	I²C input fall time			0.3	µs
t_{ocf}	I²C output fall time (10-pF to 400-pF bus)			300	ns
t_{buf}	I²C bus free time between stop and start		4.7		µs
t_{sts}	I²C start or repeated start condition setup		4.7		µs
t_{sth}	I²C start or repeated start condition hold		4		µs
t_{sps}	I²C stop condition setup		4		µs
t_{vd}	Valid data time	SCL low to SDA output valid		3.4	µs
C_b	I²C bus capacitive load			400	pF

Copyright © 2024 Texas Instruments Incorporated

5.7 Switching Characteristics

over recommended operating free-air temperature range, $C_L \leq 100$ pF (unless otherwise noted)

PARAMETER		FROM (INPUT)	TO (OUTPUT)	MIN	MAX	UNIT
t_{pv}	Output data valid	SCL	P port		4	µs
t_{su}	Input data setup time	P port	SCL	0		µs
t_h	Input data hold time	P port	SCL	4		µs
t_{iv}	Interrupt valid time	P port	$\overline{INT}$		4	µs
t_{ir}	Interrupt reset delay time	SCL	$\overline{INT}$		4	µs

Copyright © 2024 Texas Instruments Incorporated

5.8 Typical Characteristics

T_A = 25°C (unless otherwise noted)

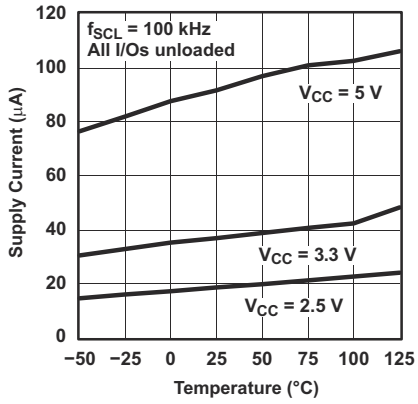

Figure 5-1. Supply Current vs Temperature

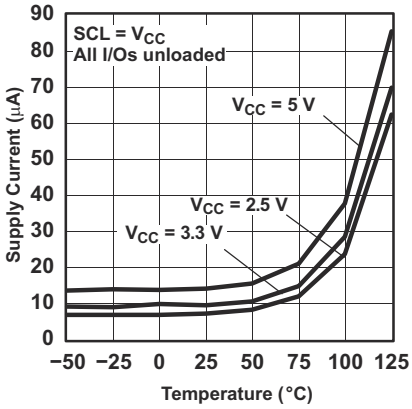

Figure 5-2. Standby Supply Current vs Temperature

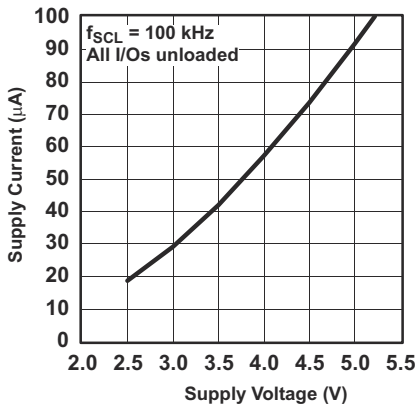

Figure 5-3. Supply Current vs Supply Voltage

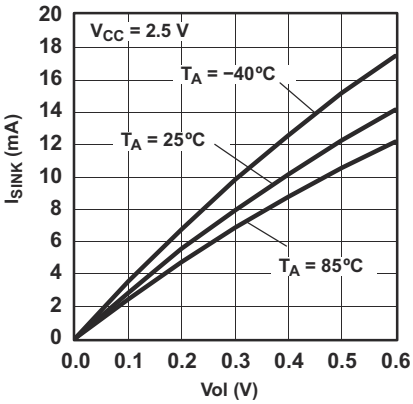

Figure 5-4. I/O Sink Current vs Output Low Voltage

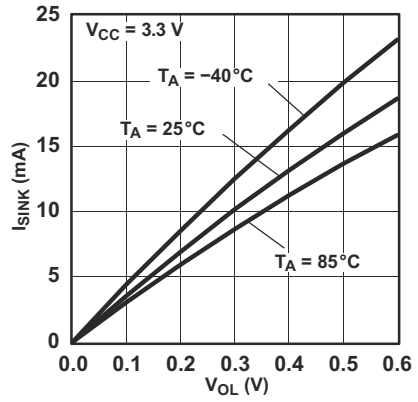

Figure 5-5. I/O Sink Current vs Output Low Voltage

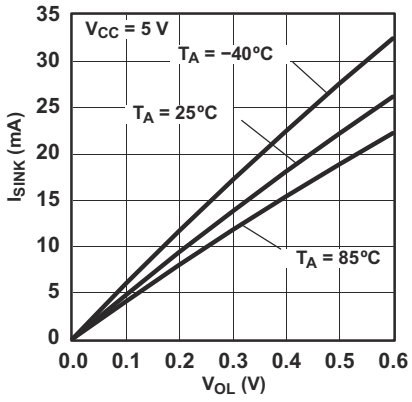

Figure 5-6. I/O Sink Current vs Output Low Voltage

Copyright © 2024 Texas Instruments Incorporated

5.8 Typical Characteristics (continued)

T_A = 25°C (unless otherwise noted)

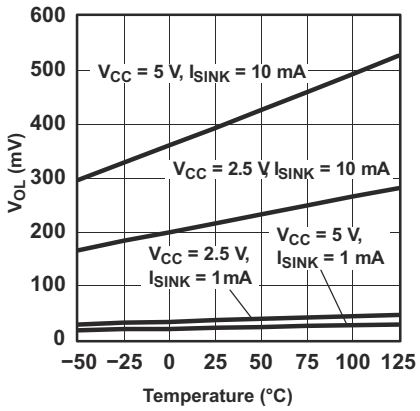

Figure 5-7. I/O Output Low Voltage vs Temperature

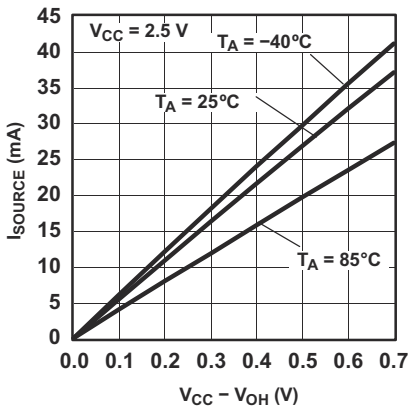

Figure 5-8. I/O Source Current vs Output High Voltage

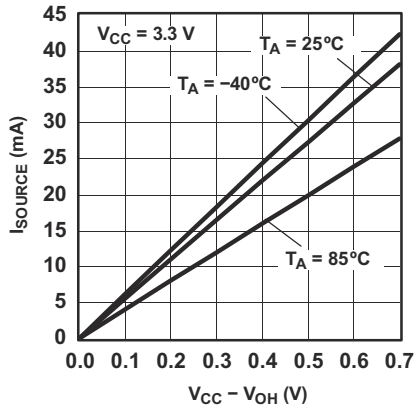

Figure 5-9. I/O Source Current vs Output High Voltage

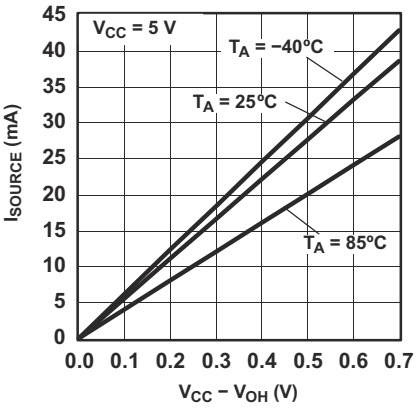

Figure 5-10. I/O Source Current vs Output High Voltage

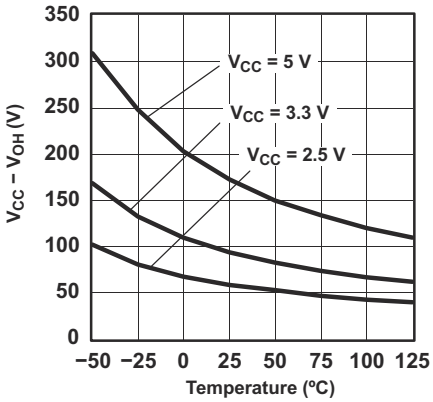

Figure 5-11. I/O High Voltage vs Temperature

Copyright © 2024 Texas Instruments Incorporated

6 Parameter Measurement Information

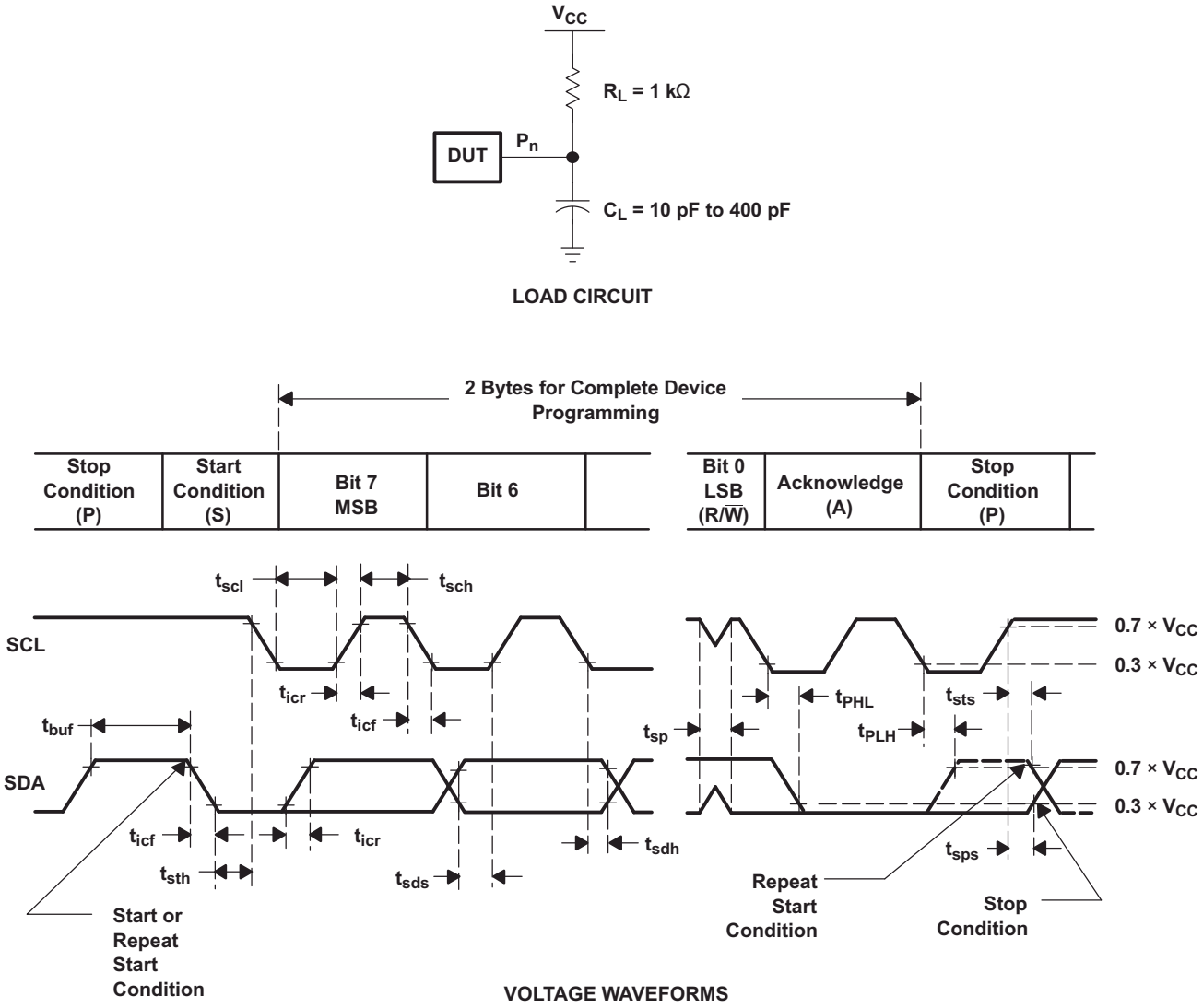

Figure 6-1. I²C Interface Load Circuit and Voltage Waveforms

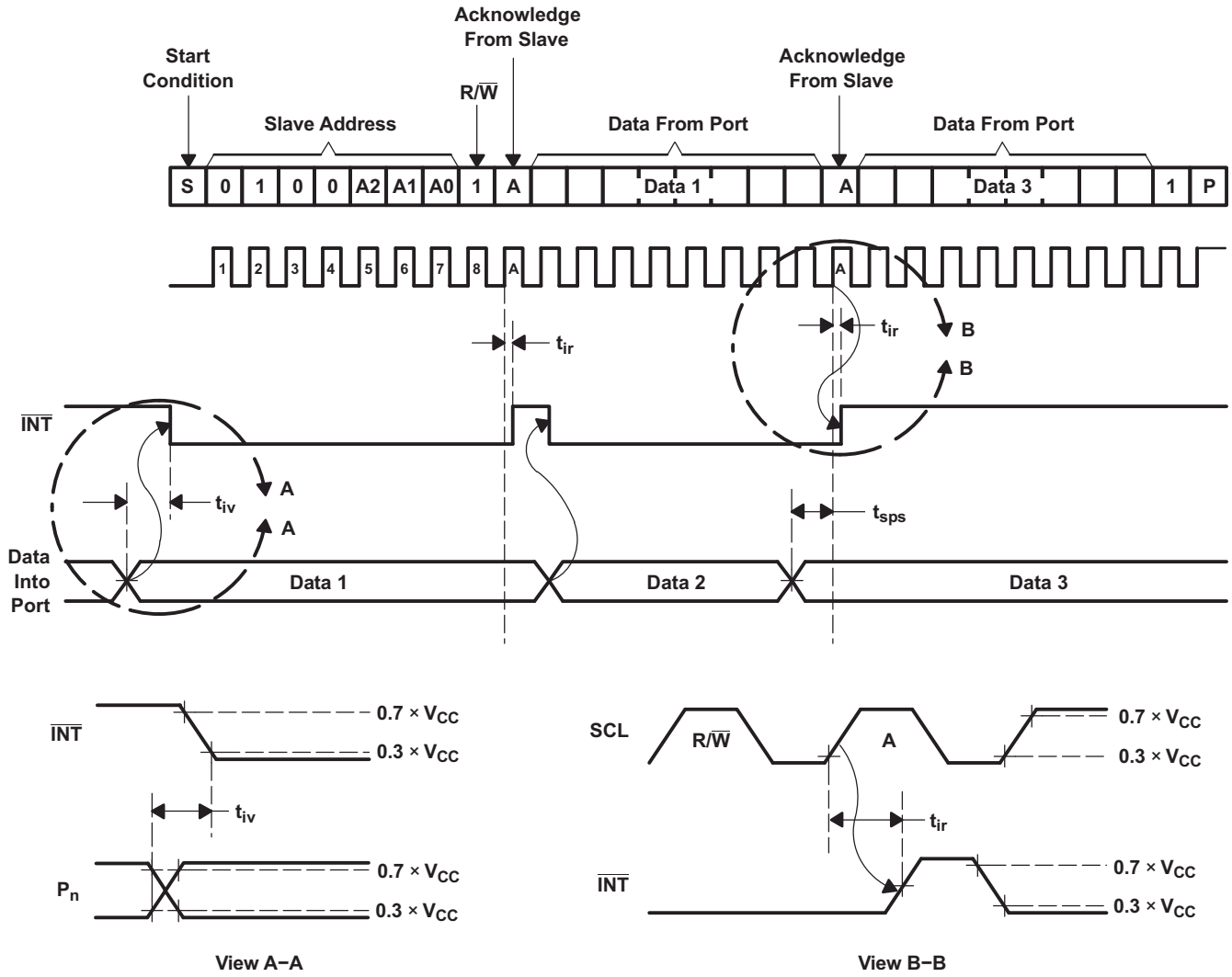

Figure 6-2. Interrupt Voltage Waveforms

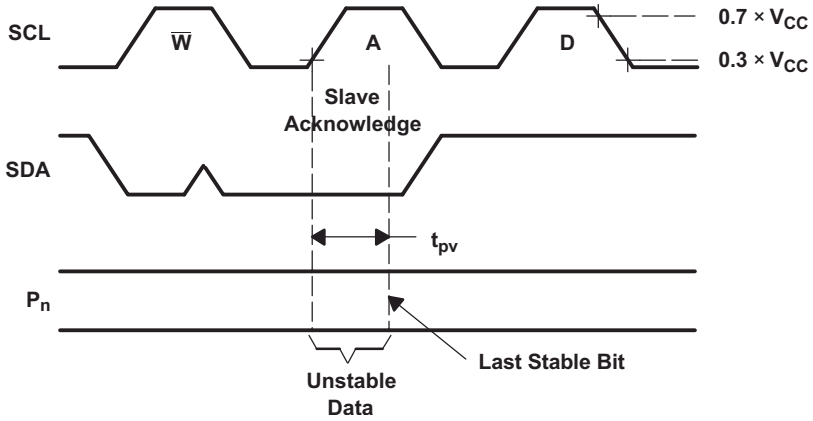

Figure 6-3. I²C Write Voltage Waveforms

Copyright © 2024 Texas Instruments Incorporated

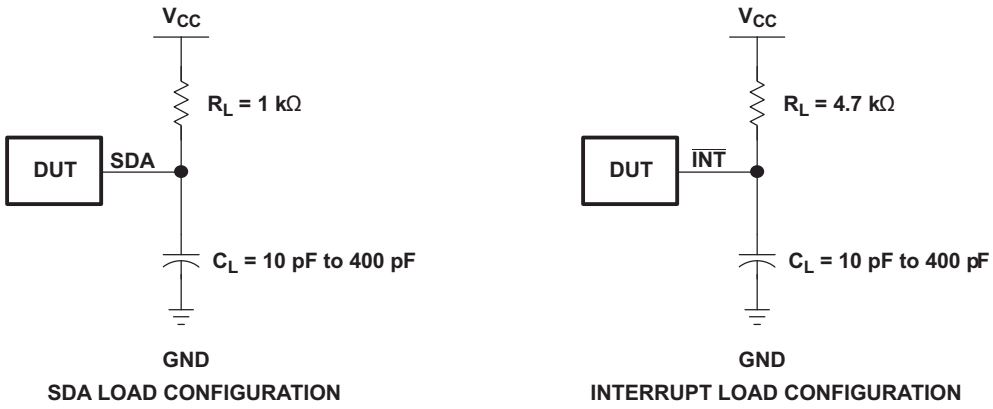

Figure 6-4. Load Circuits

7 Detailed Description

7.1 Overview

The PCF8574 device is an 8-bit I/O expander for the two-line bidirectional bus (I2C) is designed for 2.5-V to 6-V V_{CC} operation. It provides general-purpose remote I/O expansion for most micro-controller families via the I2C interface (serial clock, SCL, and serial data, SDA, pins).

The PCF8574 device provides an open-drain output ($\overline{INT}$) that can be connected to the interrupt input of a microcontroller. An interrupt is generated by any rising or falling edge of the port inputs in the input mode. After time, t_{iv}, $\overline{INT}$ is valid. Resetting and reactivating the interrupt circuit is achieved when data on the port is changed to the original setting or data is read from, or written to, the port that generated the interrupt. Resetting occurs in the read mode at the acknowledge bit after the rising edge of the SCL signal, or in the write mode at the acknowledge bit after the high-to-low transition of the SCL signal. Interrupts that occur during the acknowledge clock pulse can be lost (or be very short) due to the resetting of the interrupt during this pulse. Each change of the I/Os after resetting is detected and, after the next rising clock edge, is transmitted as $\overline{INT}$. Reading from, or writing to, another device does not affect the interrupt circuit. This device does not have internal configuration or status registers. Instead, read or write to the device I/Os directly after sending the device address (see Figure 7-3 and Figure 7-4).

By sending an interrupt signal on this line, the remote I/O can inform the microcontroller if there is incoming data on its ports without having to communicate by way of the I^2C bus. Therefore, PCF8574 can remain a simple target device.

An additional strong pullup to V_{CC} allows fast rising edges into heavily loaded outputs. This device turns on when an output is written high and is switched off by the negative edge of SCL. The I/Os should be high before being used as inputs.

7.2 Functional Block Diagram

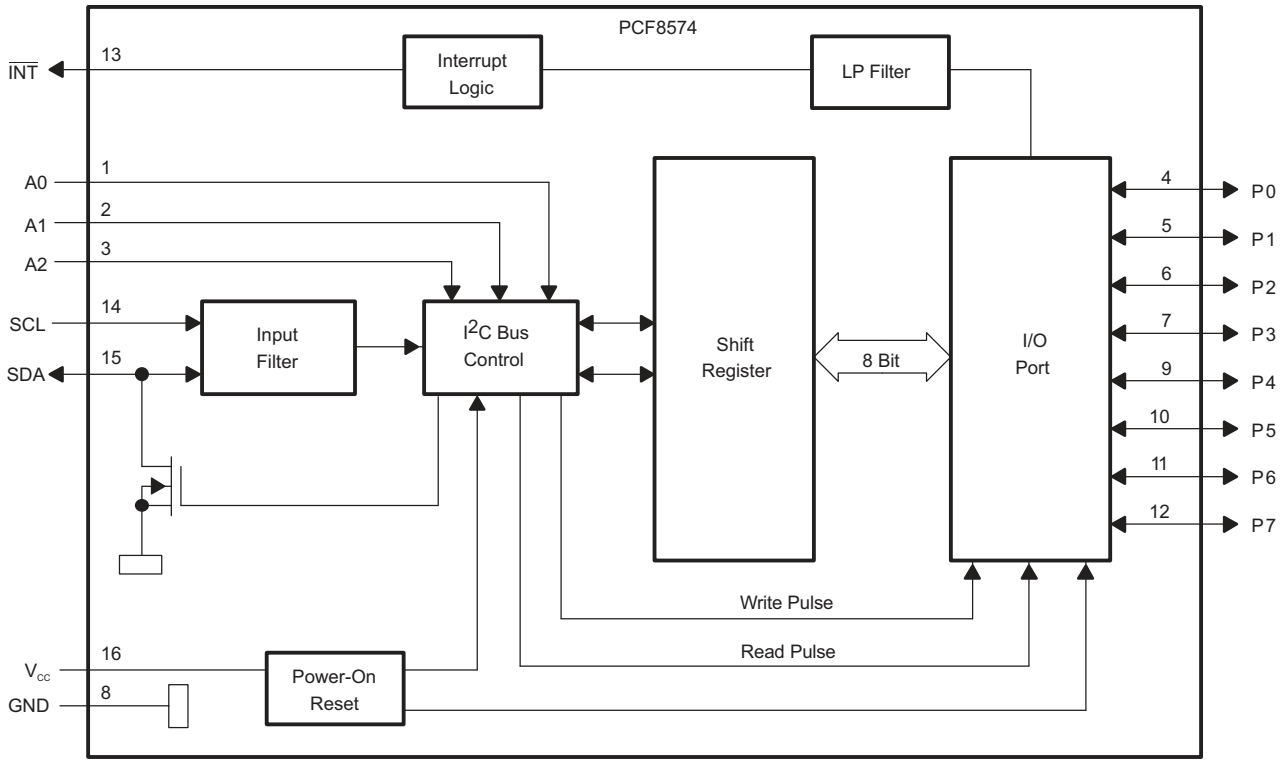

Pin numbers shown are for the DW and N packages.

Figure 7-1. Simplified Block Diagram of Device

Copyright © 2024 Texas Instruments Incorporated

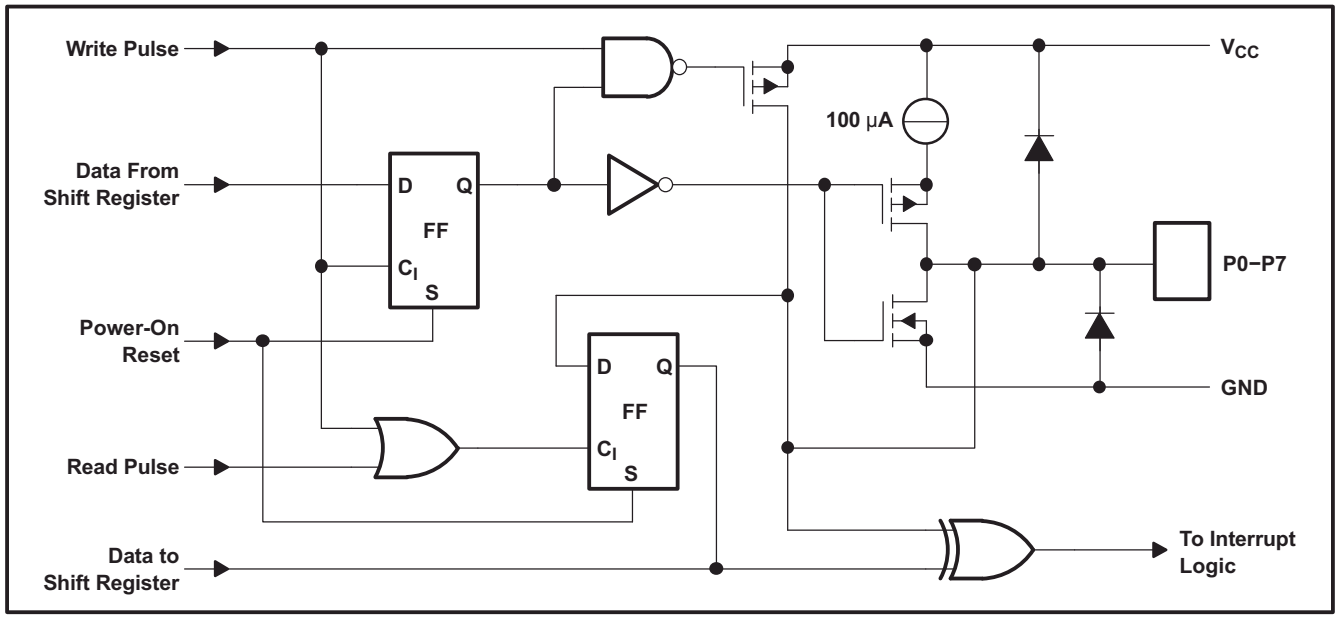

Figure 7-2. Simplified Schematic Diagram of Each P-Port Input or Output

7.3 Feature Description

7.3.1 I²C Interface

I²C communication with this device is initiated by a controller sending a start condition, a high-to-low transition on the SDA I/O while the SCL input is high. After the start condition, the device address byte is sent, most-significant bit (MSB) first, including the data direction bit (R/ $\overline{W}$). This device does not respond to the general call address. After receiving the valid address byte, this device responds with an acknowledge, a low on the SDA I/O during the high of the acknowledge-related clock pulse. The address inputs (A0–A2) of the target device must not be changed between the start and the stop conditions.

The data byte follows the address acknowledge. If the R/ $\overline{W}$ bit is high, the data from this device are the values read from the P port. If the R/ $\overline{W}$ bit is low, the data are from the controller, to be output to the P port. The data byte is followed by an acknowledge sent from this device. If other data bytes are sent from the controller, following the acknowledge, they are ignored by this device. Data are output only if complete bytes are received and acknowledged. The output data will be valid at time, t_{pv}, after the low-to-high transition of SCL and during the clock cycle for the acknowledge.

A stop condition, which is a low-to-high transition on the SDA I/O while the SCL input is high, is sent by the controller.

7.3.2 Interface Definition

BYTE	BIT							
	7 (MSB)	6	5	4	3	2	1	0 (LSB)
I²C target address	L	H	L	L	A2	A1	A0	R/ $\overline{W}$
I/O data bus	P7	P6	P5	P4	P3	P2	P1	P0

Copyright © 2024 Texas Instruments Incorporated

7.3.3 Address Reference

INPUTS			I²C BUS TARGET 8-BIT READ ADDRESS	I²C BUS TARGET 8-BIT WRITE ADDRESS
A2	A1	A0		
L	L	L	65 (decimal), 41 (hexadecimal)	64 (decimal), 40 (hexadecimal)
L	L	H	67 (decimal), 43 (hexadecimal)	66 (decimal), 42 (hexadecimal)
L	H	L	69 (decimal), 45 (hexadecimal)	68 (decimal), 44 (hexadecimal)
L	H	H	71 (decimal), 47 (hexadecimal)	70 (decimal), 46 (hexadecimal)
H	L	L	73 (decimal), 49 (hexadecimal)	72 (decimal), 48 (hexadecimal)
H	L	H	75 (decimal), 4B (hexadecimal)	74 (decimal), 4A (hexadecimal)
H	H	L	77 (decimal), 4D (hexadecimal)	76 (decimal), 4C (hexadecimal)
H	H	H	79 (decimal), 4F (hexadecimal)	78 (decimal), 4E (hexadecimal)

7.4 Device Functional Modes

Figure 7-3 and Figure 7-4 show the address and timing diagrams for the write and read modes, respectively.

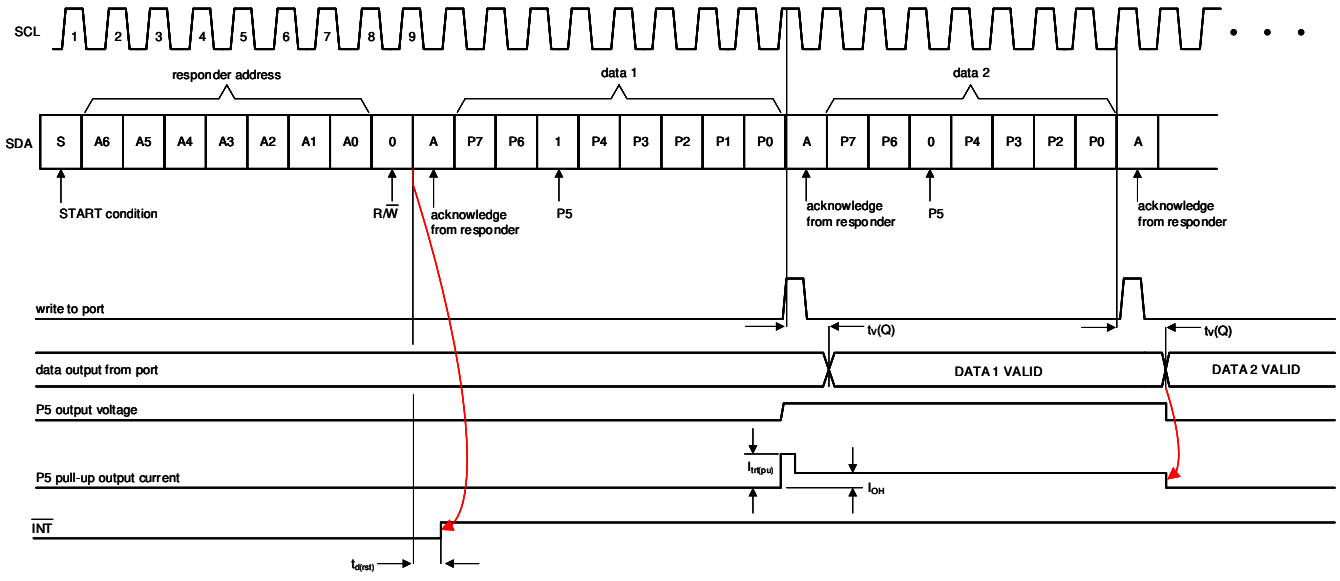

Figure 7-3. Write Mode (Output)

Copyright © 2024 Texas Instruments Incorporated

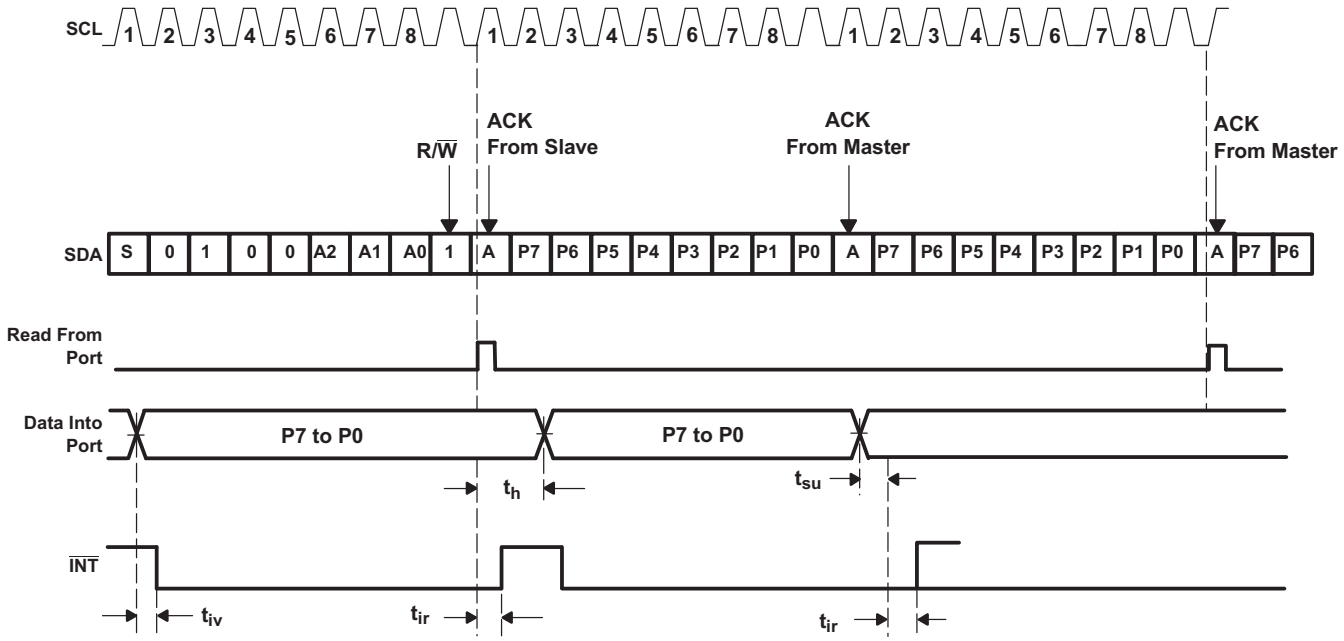

A. A low-to-high transition of SDA while SCL is high is defined as the stop condition (P). The transfer of data can be stopped at any moment bya stop condition. When this occurs, data present at the latest ACK phase is valid (output mode). Input data is lost.

Figure 7-4. Read Mode (Input)

8 Application and Implementation

Note

Information in the following applications sections is not part of the TI component specification, and TI does not warrant its accuracy or completeness. TI's customers are responsible for determining suitability of components for their purposes, as well as validating and testing their design implementation to confirm system functionality.

8.1 Application Information

Figure 8-1 shows an application in which the PCF8574 device can be used.

8.2 Typical Application

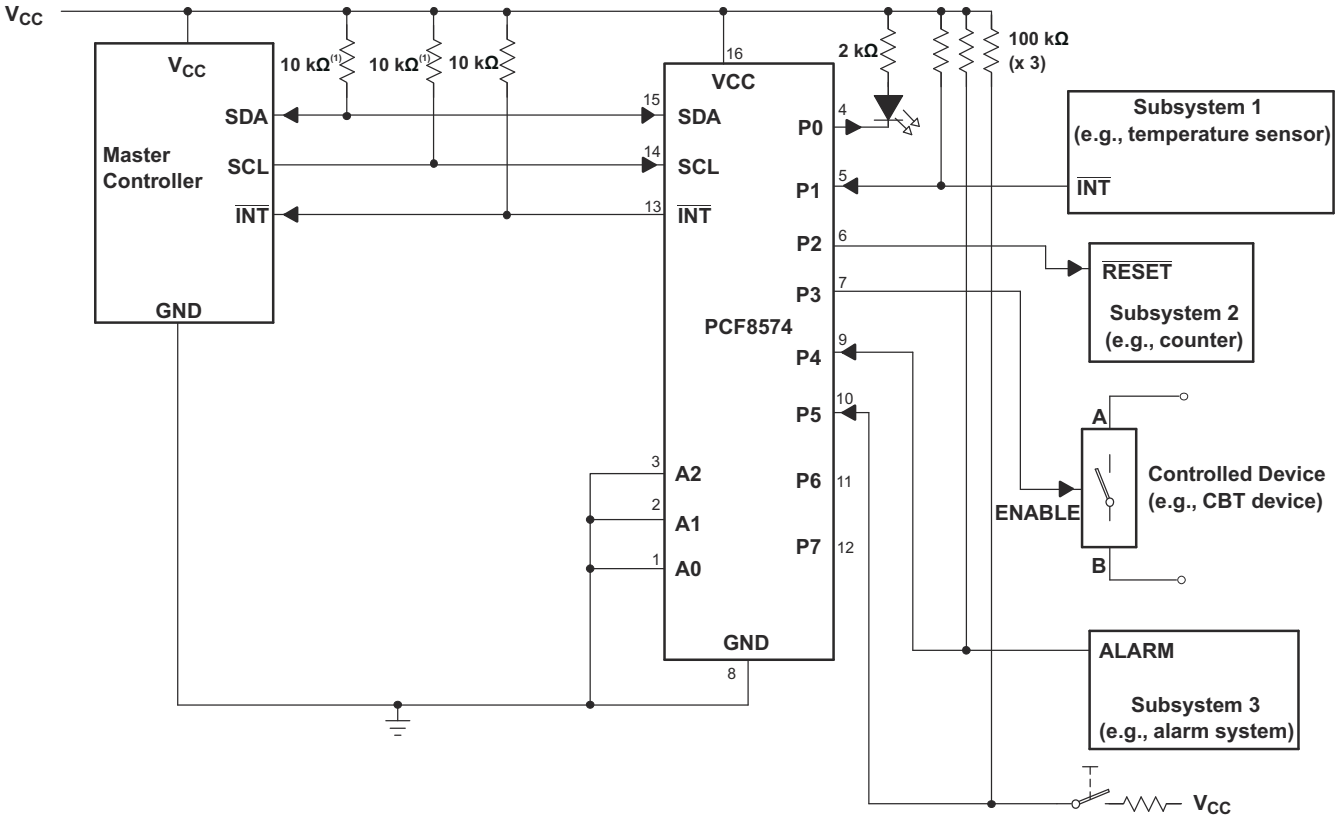

A. The SCL and SDA pins must be tied directly to V_{CC} because if SCL and SDA are tied to an auxiliary power supply that could be powered on while V_{CC} is powered off, then the supply current, ICC, will increase as a result.
B. Device address is configured as 0100000 for this example.
C. P0, P2, and P3 are configured as outputs.
D. P1, P4, and P5 are configured as inputs.
E. P6 and P7 are not used and must be configured as outputs.

Figure 8-1. Application Schematic

Copyright © 2024 Texas Instruments Incorporated

8.2.1 Design Requirements

8.2.1.1 Minimizing I_{CC} When I/Os Control LEDs

When the I/Os are used to control LEDs, normally they are connected to V_{CC} through a resistor as shown in Figure 8-1. For a P-port configured as an input, I_{CC} increases as V_I becomes lower than V_{CC}. The LED is a diode, with threshold voltage V_T, and when a P-port is configured as an input the LED will be off but V_I is a V_T drop below V_{CC}.

For battery-powered applications, it is essential that the voltage of P-ports controlling LEDs is greater than or equal to V_{CC} when the P-ports are configured as input to minimize current consumption. Figure 8-2 shows a high-value resistor in parallel with the LED. Figure 8-3 shows V_{CC} less than the LED supply voltage by at least V_T. Both of these methods maintain the I/O V_I at or above V_{CC} and prevents additional supply current consumption when the P-port is configured as an input and the LED is off.

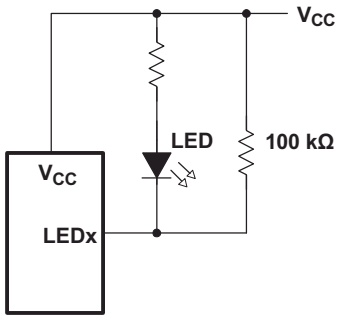

Figure 8-2. High-Value Resistor in Parallel With LED

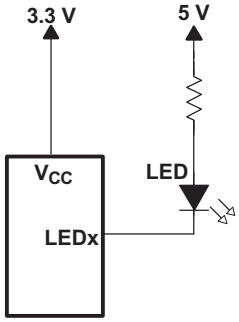

Figure 8-3. Device Supplied by a Lower Voltage

Copyright © 2024 Texas Instruments Incorporated

8.2.2 Detailed Design Procedure

The pull-up resistors, R_P, for the SCL and SDA lines need to be selected appropriately and take into consideration the total capacitance of all targets on the I^2C bus. The minimum pull-up resistance is a function of V_{CC}, $V_{OL,(max)}$, and I_{OL}:

$$R_{p(min)} = \frac{V_{CC} - V_{OL(max)}}{I_{OL}} \quad (1)$$

The maximum pull-up resistance is a function of the maximum rise time, t_r (300 ns for fast-mode operation, f_{SCL} = 400 kHz) and bus capacitance, C_b:

$$R_{p(max)} = \frac{t_r}{0.8473 \times C_b} \quad (2)$$

The maximum bus capacitance for an I^2C bus must not exceed 400 pF for standard-mode or fast-mode operation. The bus capacitance can be approximated by adding the capacitance of the PCF8574 device, C_i for SCL or C_{io} for SDA, the capacitance of wires/connections/traces, and the capacitance of additional targets on the bus.

8.2.3 Application Curves

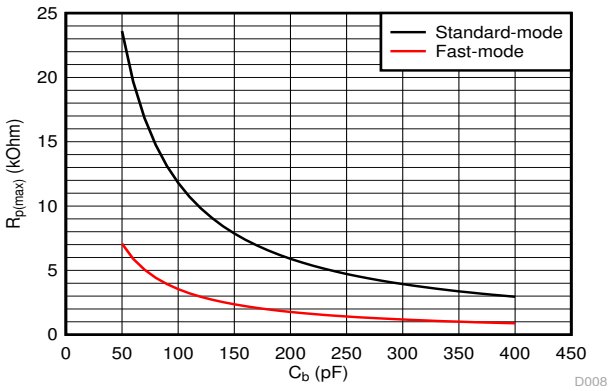

Standard-mode (f_{SCL}= 100 kHz, t_r = 1 µs)

Fast-mode (f_{SCL}= 400 kHz, t_r= 300 ns)

Figure 8-4. Maximum Pull-Up resistance ($R_{p(max)}$) vs Bus Capacitance (C_b)

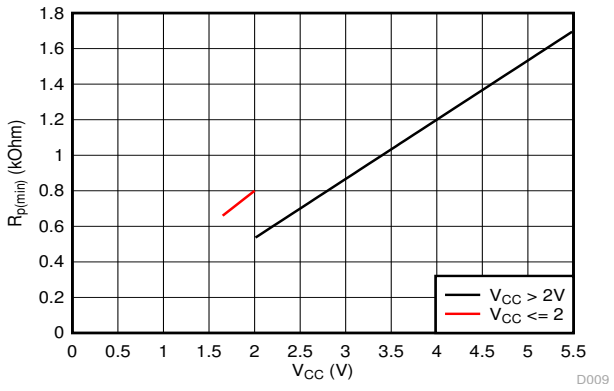

V_{OL} = 0.2*V_{CC}, I_{OL} = 2 mA when V_{CC} ≤ 2 V

V_{OL} = 0.4 V, I_{OL} = 3 mA when V_{CC} > 2 V

Figure 8-5. Minimum Pull-Up Resistance ($R_{p(min)}$) vs Pull-Up Reference Voltage (V_{CC})

8.3 Power Supply Recommendations

8.3.1 Power-On Reset Requirements

In the event of a glitch or data corruption, the PCF8574 device can be reset to its default conditions by using the power-on reset feature. Power-on reset requires that the device go through a power cycle to be completely reset. This reset also happens when the device is powered on for the first time in an application.

The two types of power-on reset are shown in Figure 8-6 and Figure 8-7.

Copyright © 2024 Texas Instruments Incorporated

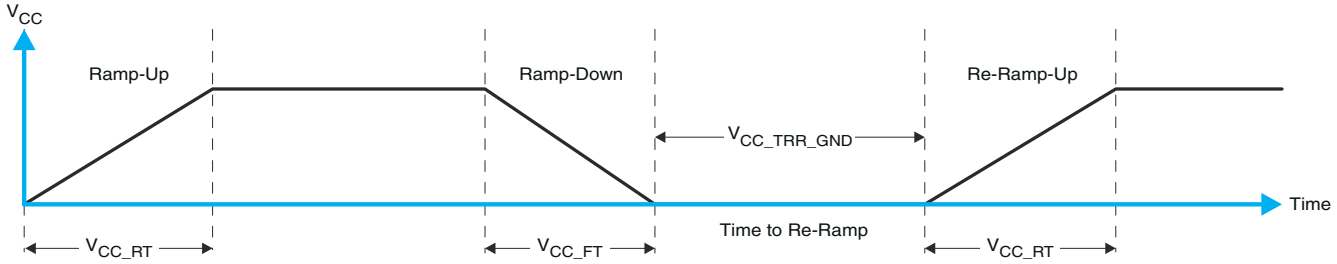

Figure 8-6. V_{CC} is Lowered Below 0.2 V or 0 V and Then Ramped Up to V_{CC}

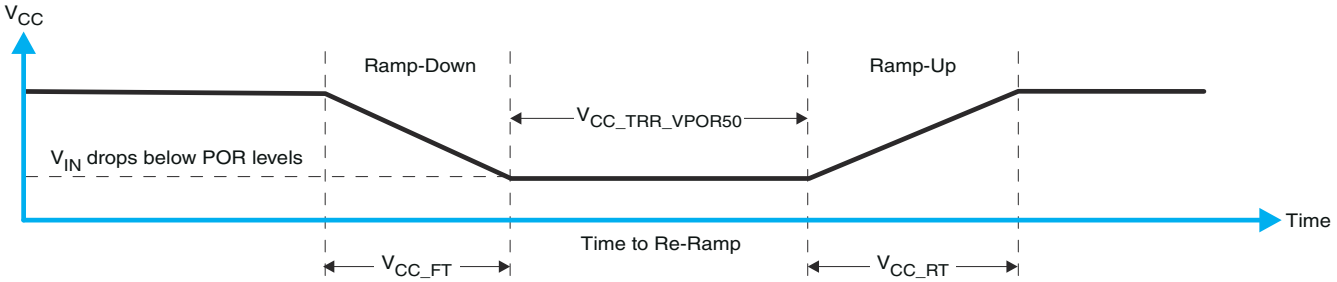

Figure 8-7. V_{CC} is Lowered Below the POR Threshold, Then Ramped Back Up to V_{CC}

Table 8-1 specifies the performance of the power-on reset feature for PCF8574 for both types of power-on reset.

Table 8-1. Recommended Supply Sequencing and Ramp Rates (1)

PARAMETER			MIN	TYP	MAX	UNIT
V_{CC_FT}	Fall rate	See Figure 8-6	1		100	ms
V_{CC_RT}	Rise rate	See Figure 8-6	0.01		100	ms
$V_{CC_TRR_GND}$	Time to re-ramp (when V_{CC} drops to GND)	See Figure 8-6	0.001			ms
$V_{CC_TRR_POR50}$	Time to re-ramp (when V_{CC} drops to V_{POR_MIN} – 50 mV)	See Figure 8-7	0.001			ms
V_{CC_GH}	Level that V_{CCP} can glitch down to, but not cause a functional disruption when V_{CCX_GW} = 1 µs	See Figure 8-8			1.2	V
V_{CC_GW}	Glitch width that will not cause a functional disruption when V_{CCX_GH} = 0.5 × V_{CCx}	See Figure 8-8				µs
V_{PORF}	Voltage trip point of POR on falling V_{CC}		0.99		1.28	V
V_{PORR}	Voltage trip point of POR on fising V_{CC}		1.190		1.410	V

(1) T_A = –40°C to 85°C (unless otherwise noted)

Glitches in the power supply can also affect the power-on reset performance of this device. The glitch width (V_{CC_GW}) and height (V_{CC_GH}) are dependent on each other. The bypass capacitance, source impedance, and device impedance are factors that affect power-on reset performance. Figure 8-8 and Table 8-1 provide more information on how to measure these specifications.

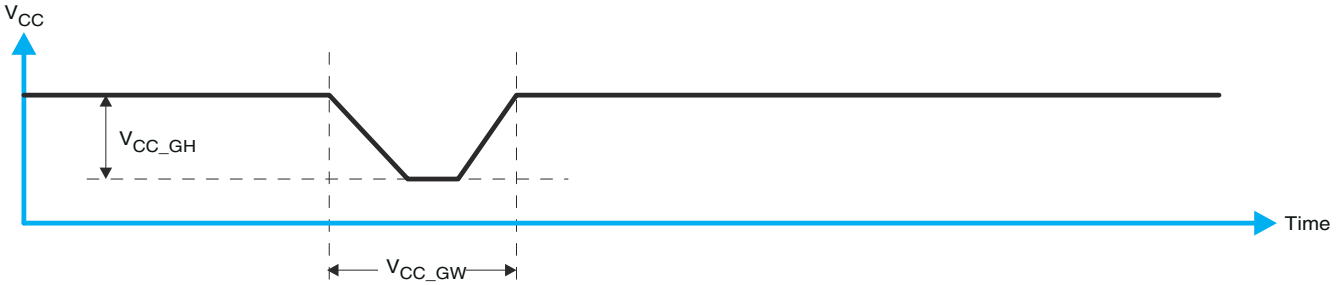

Figure 8-8. Glitch Width and Glitch Height

Copyright © 2024 Texas Instruments Incorporated

V_{POR} is critical to the power-on reset. V_{POR} is the voltage level at which the reset condition is released and all the registers and the I^2C/SMBus state machine are initialized to their default states. The value of V_{POR} differs based on the V_{CC} being lowered to or from 0. Figure 8-9 and Table 8-1 provide more details on this specification.

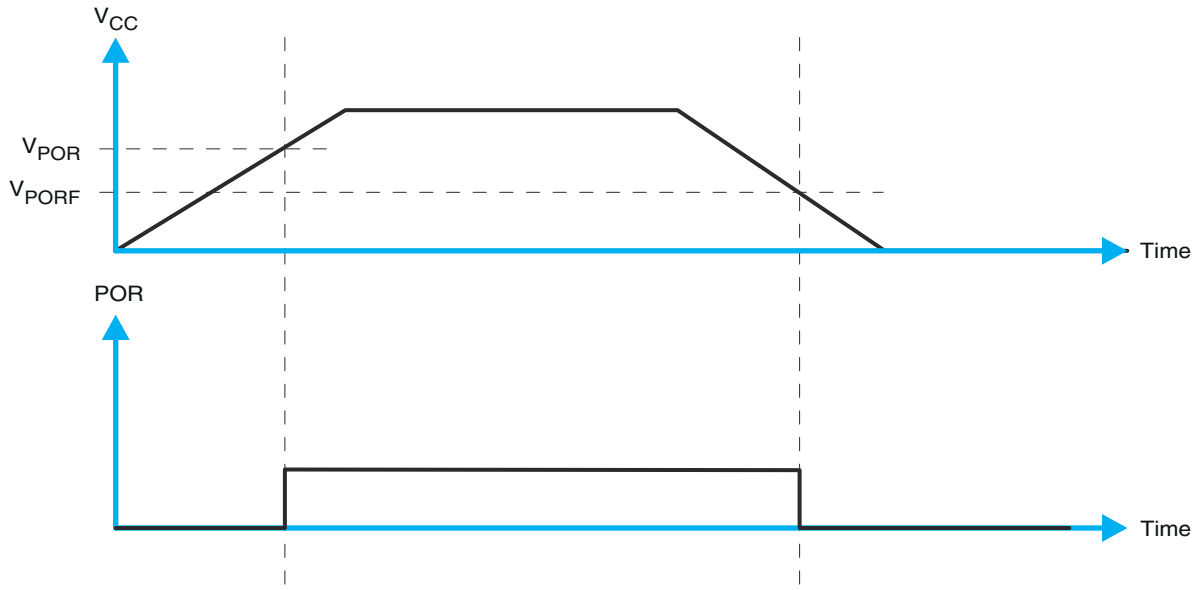

Figure 8-9. V_{POR}

8.4 Layout

8.4.1 Layout Guidelines

For printed circuit board (PCB) layout of the PCF8574 device, common PCB layout practices should be followed but additional concerns related to high-speed data transfer such as matched impedances and differential pairs are not a concern for I2C signal speeds.

In all PCB layouts, it is a best practice to avoid right angles in signal traces, to fan out signal traces away from each other upon leaving the vicinity of an integrated circuit (IC), and to use thicker trace widths to carry higher amounts of current that commonly pass through power and ground traces. By-pass and de-coupling capacitors are commonly used to control the voltage on the VCC pin, using a larger capacitor to provide additional power in the event of a short power supply glitch and a smaller capacitor to filter out high-frequency ripple. These capacitors should be placed as close to the PCF8574 device as possible. These best practices are shown in Figure 8-10.

For the layout example provided in Figure 8-10, it would be possible to fabricate a PCB with only 2 layers by using the top layer for signal routing and the bottom layer as a split plane for power (VCC) and ground (GND). However, a 4 layer board is preferable for boards with higher density signal routing. On a 4 layer PCB, it is common to route signals on the top and bottom layer, dedicate one internal layer to a ground plane, and dedicate the other internal layer to a power plane. In a board layout using planes or split planes for power and ground, vias are placed directly next to the surface mount component pad which needs to attach to VCC or GND and the via is connected electrically to the internal layer or the other side of the board. Vias are also used when a signal trace needs to be routed to the opposite side of the board, but this technique is not demonstrated in Figure 8-10.

Copyright © 2024 Texas Instruments Incorporated

8.4.2 Layout Example

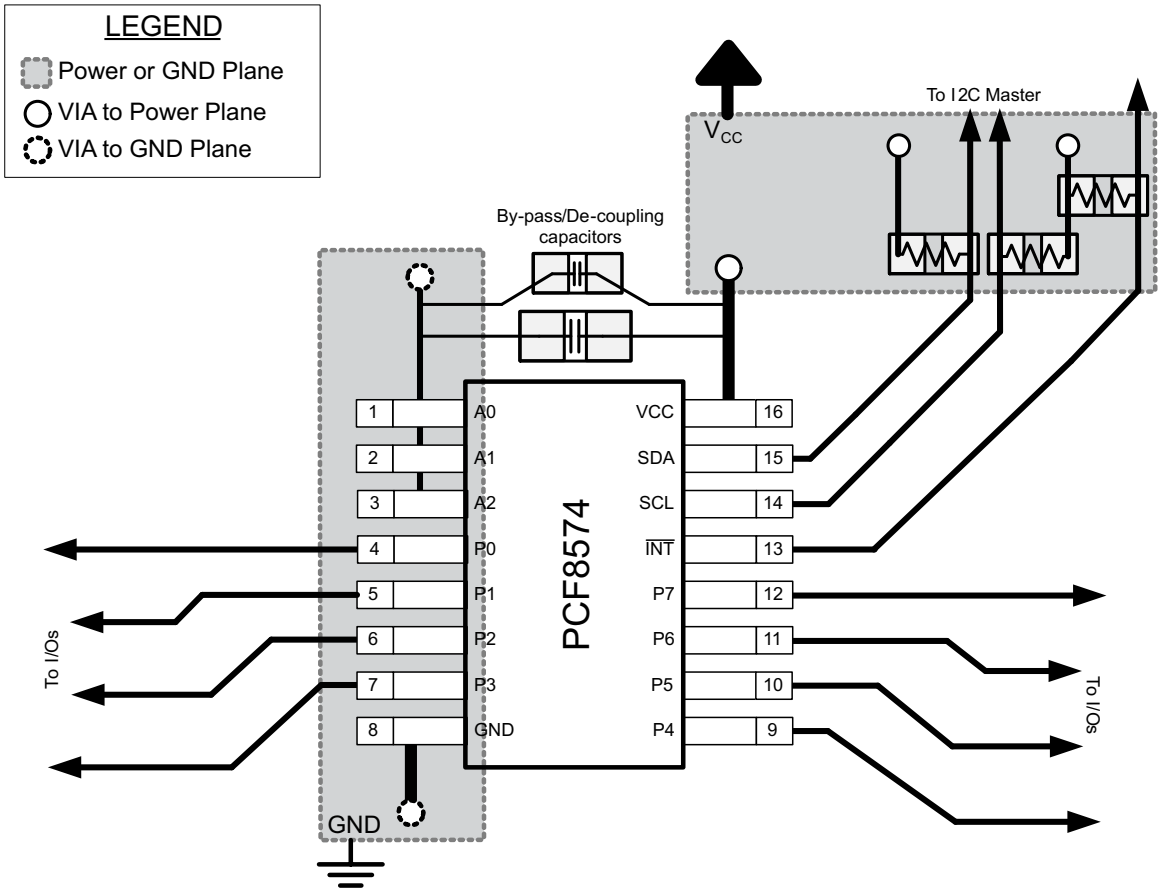

Figure 8-10. Layout Example for PCF8574

9 Device and Documentation Support

9.1 Documentation Support

9.1.1 Glossary

SLYZ022 — *TI Glossary.*

This glossary lists and explains terms, acronyms and definitions.

9.2 Receiving Notification of Documentation Updates

To receive notification of documentation updates, navigate to the device product folder on ti.com. In the upper right corner, click on *Alert me* to register and receive a weekly digest of any product information that has changed. For change details, review the revision history included in any revised document.

9.3 Support Resources

TI E2E™ support forums are an engineer's go-to source for fast, verified answers and design help — straight from the experts. Search existing answers or ask your own question to get the quick design help you need.

Linked content is provided "AS IS" by the respective contributors. They do not constitute TI specifications and do not necessarily reflect TI's views; see TI's Terms of Use.

9.4 Trademarks

TI E2E™ is a trademark of Texas Instruments.
All trademarks are the property of their respective owners.

9.5 Electrostatic Discharge Caution



This integrated circuit can be damaged by ESD. Texas Instruments recommends that all integrated circuits be handled with appropriate precautions. Failure to observe proper handling and installation procedures can cause damage.

ESD damage can range from subtle performance degradation to complete device failure. Precision integrated circuits may be more susceptible to damage because very small parametric changes could cause the device not to meet its published specifications.

9.6 Glossary

TI Glossary	This glossary lists and explains terms, acronyms, and definitions.

10 Revision History

Changes from Revision J (March 2016) to Revision K (September 2024)	Page
• Changed all instances of legacy terminology to controller and target where I^2C is mentioned	1
• Changed the Device Information table to the *Package Information* table	1
• Update *Absolute Max Voltage* from 7V to 6.5V	4
• Update *Thermal Information* for RGY, PW, RGT, N and DW packages	4
• Update I_{OH} polarity and increase limit from -300µA to -310µA	5
• Removed footnote #2 from *Electrical Characteristics*	5
• Updated I_{IHL} test condition	5
• Changed Spike filter limit from 100ns to 70ns max	5
• Changed Figure 7-3	14
• Updated VPORF and VPORR values	18

Changes from Revision I (November 2015) to Revision J (March 2016)	Page
• Corrected part number in *Device Information* table	1

Copyright © 2024 Texas Instruments Incorporated

11 Mechanical, Packaging, and Orderable Information

The following pages include mechanical packaging and orderable information. This information is the most current data available for the designated devices. This data is subject to change without notice and revision of this document. For browser based versions of this data sheet, refer to the left hand navigation.

Copyright © 2024 Texas Instruments Incorporated

PACKAGING INFORMATION

Orderable part number	Status (1)	Material type (2)	Package | Pins	Package qty | Carrier	RoHS (3)	Lead finish/ Ball material (4)	MSL rating/ Peak reflow (5)	Op temp (°C)	Part marking (6)
PCF8574DGVR	Active	Production	TVSOP (DGV) | 20	2000 | LARGE T&R	Yes	NIPDAU	Level-1-260C-UNLIM	-40 to 85	PF574
PCF8574DGVR.A	Active	Production	TVSOP (DGV) | 20	2000 | LARGE T&R	Yes	NIPDAU	Level-1-260C-UNLIM	-40 to 85	PF574
PCF8574DW	Obsolete	Production	SOIC (DW) | 16	-	-	Call TI	Call TI	-40 to 85	PCF8574
PCF8574DWR	Active	Production	SOIC (DW) | 16	2000 | LARGE T&R	Yes	NIPDAU	Level-1-260C-UNLIM	-40 to 85	PCF8574
PCF8574DWR.A	Active	Production	SOIC (DW) | 16	2000 | LARGE T&R	Yes	NIPDAU	Level-1-260C-UNLIM	-40 to 85	PCF8574
PCF8574DWR1G4	Active	Production	SOIC (DW) | 16	2000 | LARGE T&R	Yes	NIPDAU	Level-1-260C-UNLIM	-40 to 85	PCF8574
PCF8574DWR1G4.A	Active	Production	SOIC (DW) | 16	2000 | LARGE T&R	Yes	NIPDAU	Level-1-260C-UNLIM	-40 to 85	PCF8574
PCF8574DWRG4	Obsolete	Production	SOIC (DW) | 16	-	-	Call TI	Call TI	-40 to 85	PCF8574
PCF8574N	Active	Production	PDIP (N) | 16	25 | TUBE	Yes	NIPDAU	N/A for Pkg Type	-40 to 85	PCF8574N
PCF8574N.A	Active	Production	PDIP (N) | 16	25 | TUBE	Yes	NIPDAU	N/A for Pkg Type	-40 to 85	PCF8574N
PCF8574NE4	Active	Production	PDIP (N) | 16	25 | TUBE	Yes	NIPDAU	N/A for Pkg Type	-40 to 85	PCF8574N
PCF8574PWR	Active	Production	TSSOP (PW) | 20	2000 | LARGE T&R	Yes	NIPDAU	Level-1-260C-UNLIM	-40 to 85	PF574
PCF8574PWR.A	Active	Production	TSSOP (PW) | 20	2000 | LARGE T&R	Yes	NIPDAU	Level-1-260C-UNLIM	-40 to 85	PF574
PCF8574PWRG4	Active	Production	TSSOP (PW) | 20	2000 | LARGE T&R	Yes	NIPDAU	Level-1-260C-UNLIM	-40 to 85	PF574
PCF8574PWRG4.A	Active	Production	TSSOP (PW) | 20	2000 | LARGE T&R	Yes	NIPDAU	Level-1-260C-UNLIM	-40 to 85	PF574
PCF8574RGTR	Active	Production	VQFN (RGT) | 16	3000 | LARGE T&R	Yes	NIPDAU	Level-2-260C-1 YEAR	-40 to 85	ZWJ
PCF8574RGTR.A	Active	Production	VQFN (RGT) | 16	3000 | LARGE T&R	Yes	NIPDAU	Level-2-260C-1 YEAR	-40 to 85	ZWJ
PCF8574RGTRG4	Active	Production	VQFN (RGT) | 16	3000 | LARGE T&R	Yes	NIPDAU	Level-2-260C-1 YEAR	-40 to 85	ZWJ
PCF8574RGTRG4.A	Active	Production	VQFN (RGT) | 16	3000 | LARGE T&R	Yes	NIPDAU	Level-2-260C-1 YEAR	-40 to 85	ZWJ
PCF8574RGYR	Active	Production	VQFN (RGY) | 20	3000 | LARGE T&R	Yes	NIPDAU	Level-2-260C-1 YEAR	-40 to 85	PF574
PCF8574RGYR.A	Active	Production	VQFN (RGY) | 20	3000 | LARGE T&R	Yes	NIPDAU	Level-2-260C-1 YEAR	-40 to 85	PF574
PCF8574RGYRG4	Active	Production	VQFN (RGY) | 20	3000 | LARGE T&R	Yes	NIPDAU	Level-2-260C-1 YEAR	-40 to 85	PF574
PCF8574RGYRG4.A	Active	Production	VQFN (RGY) | 20	3000 | LARGE T&R	Yes	NIPDAU	Level-2-260C-1 YEAR	-40 to 85	PF574

(1) **Status:** For more details on status, see our product life cycle.

(2) **Material type:** When designated, preproduction parts are prototypes/experimental devices, and are not yet approved or released for full production. Testing and final process, including without limitation quality assurance, reliability performance testing, and/or process qualification, may not yet be complete, and this item is subject to further changes or possible discontinuation. If available for ordering, purchases will be subject to an additional waiver at checkout, and are intended for early internal evaluation purposes only. These items are sold without warranties of any kind.

(3) **RoHS values:** Yes, No, RoHS Exempt. See the TI RoHS Statement for additional information and value definition.

(4) **Lead finish/Ball material:** Parts may have multiple material finish options. Finish options are separated by a vertical ruled line. Lead finish/Ball material values may wrap to two lines if the finish value exceeds the maximum column width.

(5) **MSL rating/Peak reflow:** The moisture sensitivity level ratings and peak solder (reflow) temperatures. In the event that a part has multiple moisture sensitivity ratings, only the lowest level per JEDEC standards is shown. Refer to the shipping label for the actual reflow temperature that will be used to mount the part to the printed circuit board.

(6) **Part marking:** There may be an additional marking, which relates to the logo, the lot trace code information, or the environmental category of the part.

Multiple part markings will be inside parentheses. Only one part marking contained in parentheses and separated by a "~" will appear on a part. If a line is indented then it is a continuation of the previous line and the two combined represent the entire part marking for that device.

Important Information and Disclaimer: The information provided on this page represents TI's knowledge and belief as of the date that it is provided. TI bases its knowledge and belief on information provided by third parties, and makes no representation or warranty as to the accuracy of such information. Efforts are underway to better integrate information from third parties. TI has taken and continues to take reasonable steps to provide representative and accurate information but may not have conducted destructive testing or chemical analysis on incoming materials and chemicals. TI and TI suppliers consider certain information to be proprietary, and thus CAS numbers and other limited information may not be available for release.

In no event shall TI's liability arising out of such information exceed the total purchase price of the TI part(s) at issue in this document sold by TI to Customer on an annual basis.

PACKAGE OUTLINE

PW0020A

TSSOP - 1.2 mm max height

SMALL OUTLINE PACKAGE

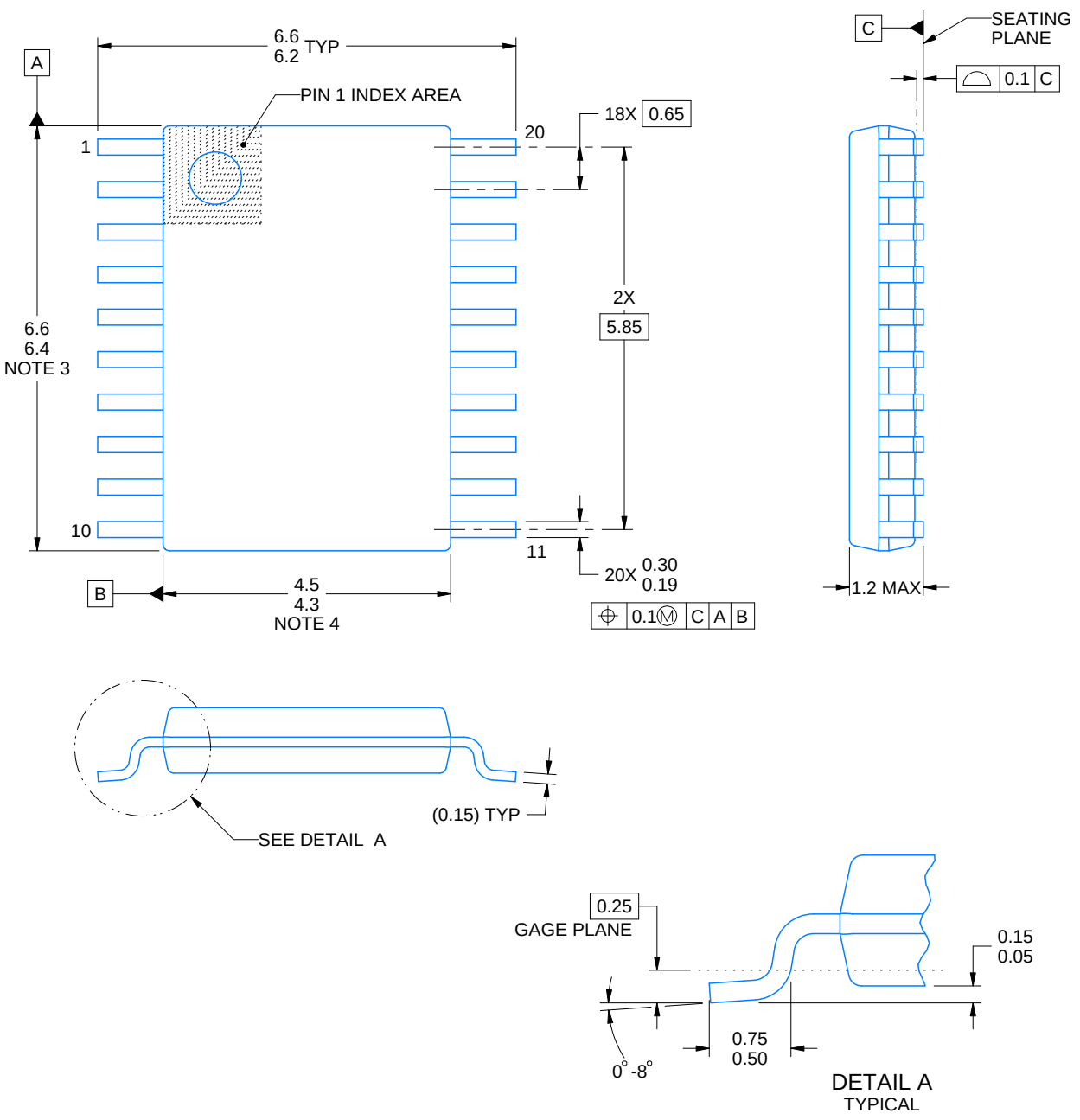

NOTES:

1. All linear dimensions are in millimeters. Any dimensions in parenthesis are for reference only. Dimensioning and tolerancing per ASME Y14.5M.
2. This drawing is subject to change without notice.
3. This dimension does not include mold flash, protrusions, or gate burrs. Mold flash, protrusions, or gate burrs shall not exceed 0.15 mm per side.
4. This dimension does not include interlead flash. Interlead flash shall not exceed 0.25 mm per side.
5. Reference JEDEC registration MO-153.

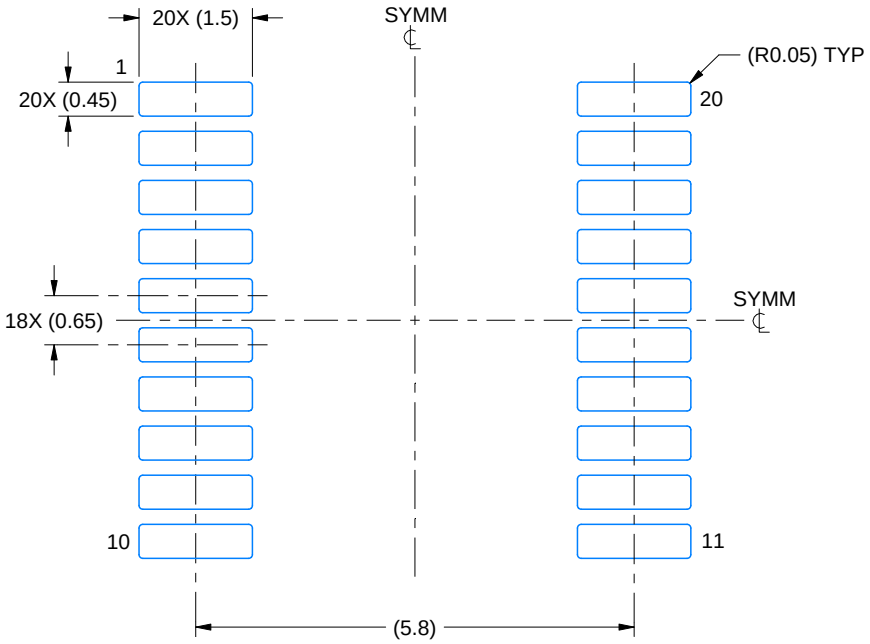

LAND PATTERN EXAMPLE
EXPOSED METAL SHOWN
SCALE: 10X



SOLDER MASK DETAILS

4220206/A 02/2017

NOTES: (continued)

6. Publication IPC-7351 may have alternate designs.
7. Solder mask tolerances between and around signal pads can vary based on board fabrication site.

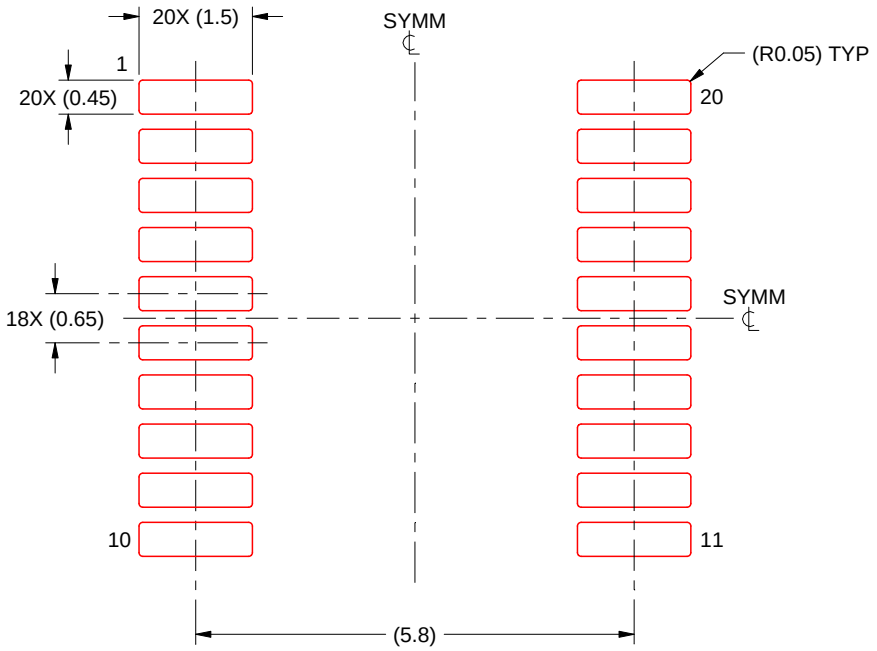

SOLDER PASTE EXAMPLE
BASED ON 0.125 mm THICK STENCIL
SCALE: 10X

4220206/A 02/2017

NOTES: (continued)

8. Laser cutting apertures with trapezoidal walls and rounded corners may offer better paste release. IPC-7525 may have alternate design recommendations.
9. Board assembly site may have different recommendations for stencil design.

RGT 16 VQFN - 1 mm max height

PLASTIC QUAD FLATPACK - NO LEAD

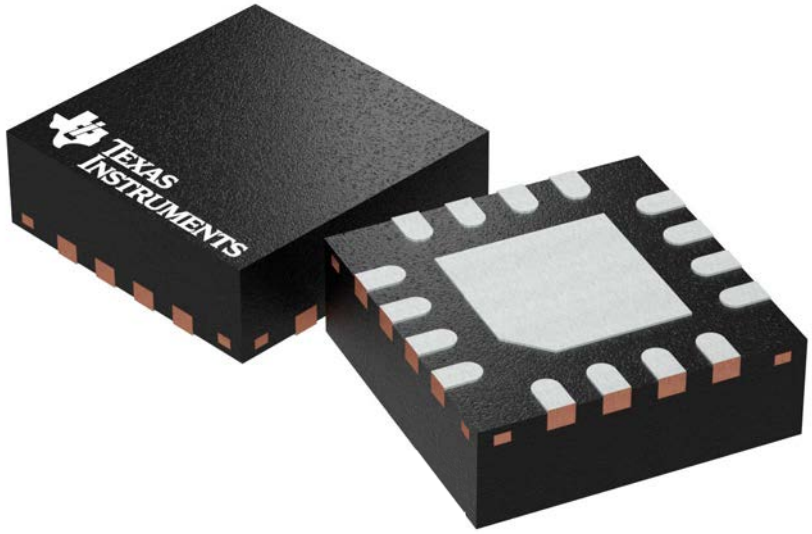

Images above are just a representation of the package family, actual package may vary.
Refer to the product data sheet for package details.

PACKAGE OUTLINE

RGT0016C

VQFN - 1 mm max height

PLASTIC QUAD FLATPACK - NO LEAD

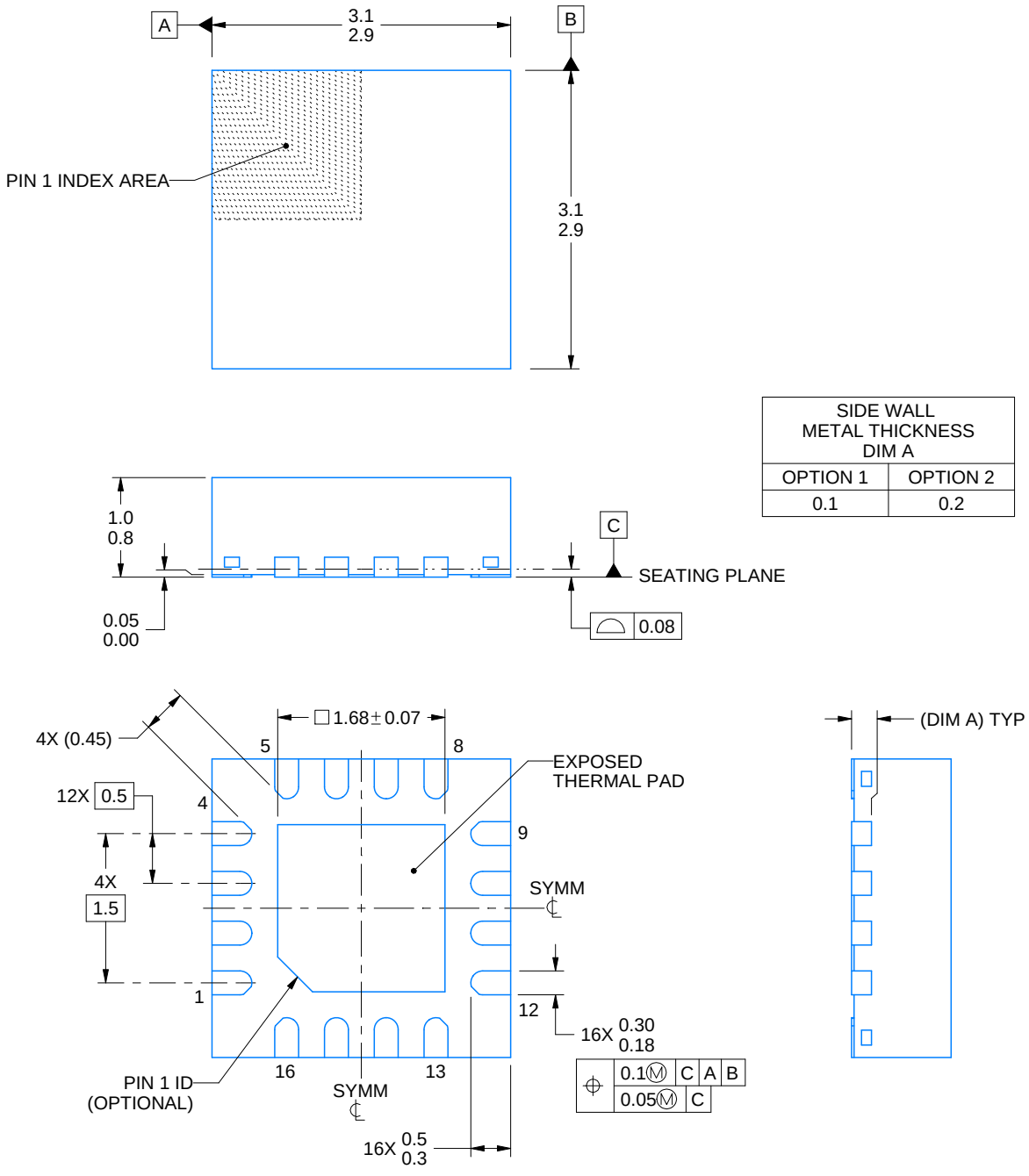

NOTES:

1. All linear dimensions are in millimeters. Any dimensions in parenthesis are for reference only. Dimensioning and tolerancing per ASME Y14.5M.
2. This drawing is subject to change without notice.
3. The package thermal pad must be soldered to the printed circuit board for thermal and mechanical performance.

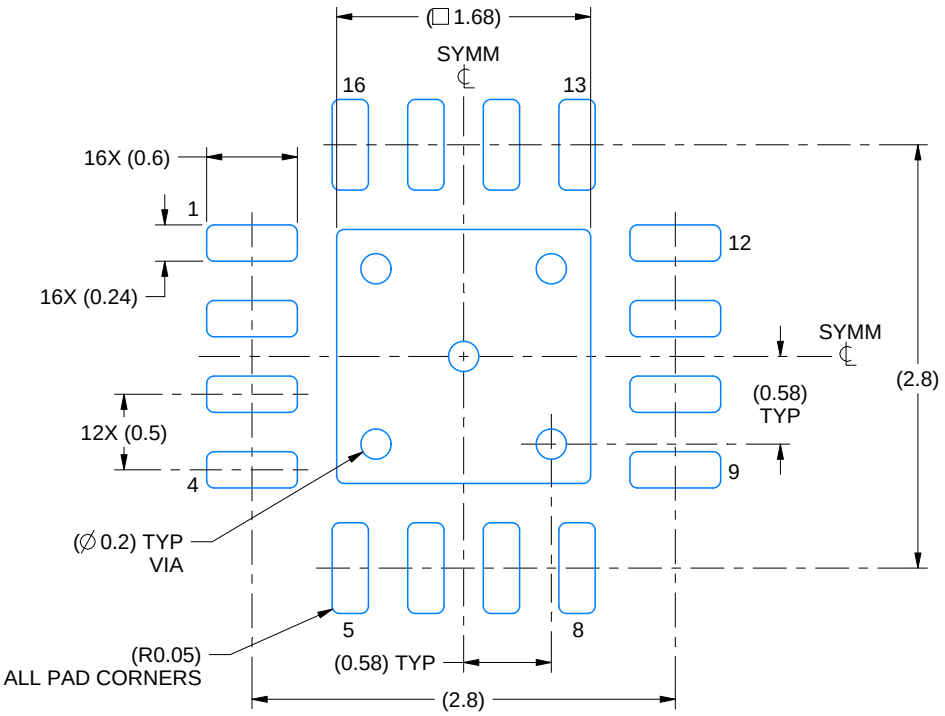

LAND PATTERN EXAMPLE
EXPOSED METAL SHOWN
SCALE:20X

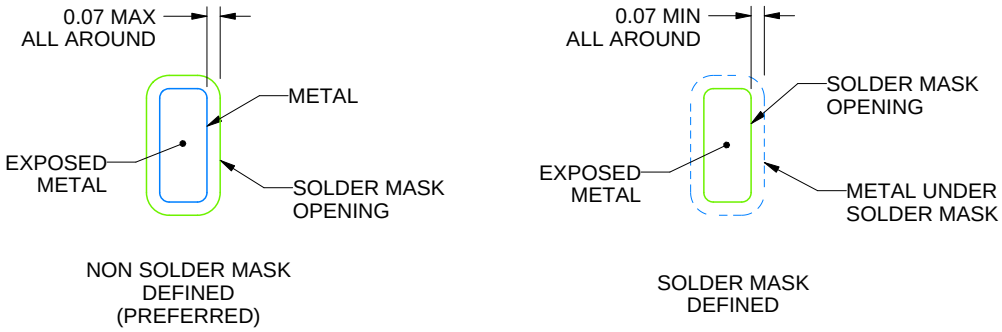

SOLDER MASK DETAILS

4222419/E 07/2025

NOTES: (continued)

4. This package is designed to be soldered to a thermal pad on the board. For more information, see Texas Instruments literature number SLUA271 (www.ti.com/lit/slua271).
5. Vias are optional depending on application, refer to device data sheet. If any vias are implemented, refer to their locations shown on this view. It is recommended that vias under paste be filled, plugged or tented.

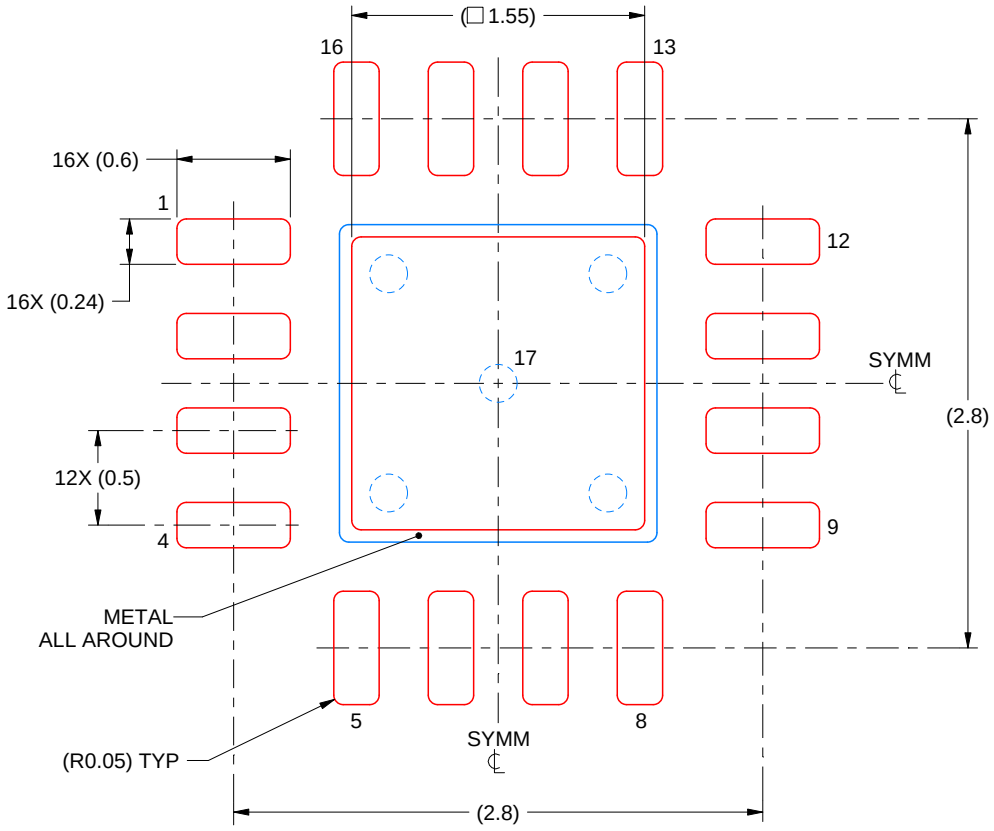

SOLDER PASTE EXAMPLE
BASED ON 0.125 mm THICK STENCIL

EXPOSED PAD 17:
85% PRINTED SOLDER COVERAGE BY AREA UNDER PACKAGE
SCALE:25X

4222419/E 07/2025

NOTES: (continued)

6. Laser cutting apertures with trapezoidal walls and rounded corners may offer better paste release. IPC-7525 may have alternate design recommendations.

GENERIC PACKAGE VIEW

RGY 20

VQFN - 1 mm max height

3.5 x 4.5, 0.5 mm pitch

PLASTIC QUAD FGLATPACK - NO LEAD

This image is a representation of the package family, actual package may vary.
Refer to the product data sheet for package details.

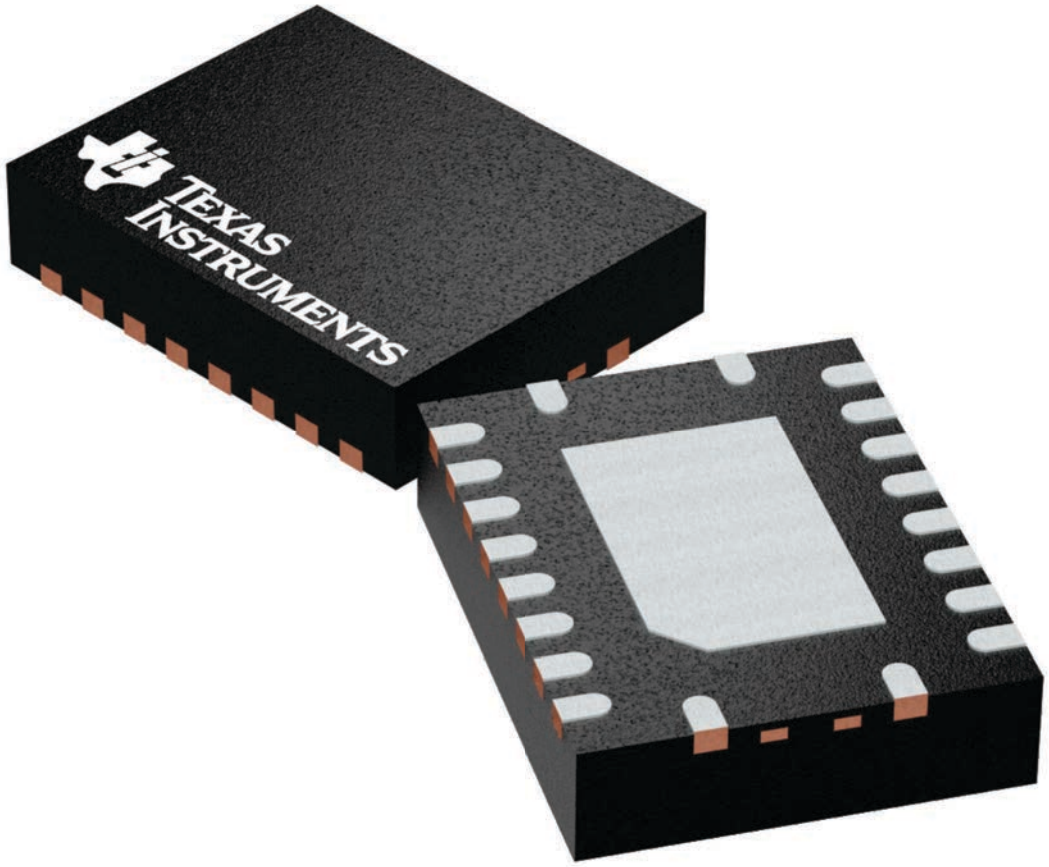

4225264/A

GENERIC PACKAGE VIEW

DW 16

SOIC - 2.65 mm max height

7.5 x 10.3, 1.27 mm pitch

SMALL OUTLINE INTEGRATED CIRCUIT

This image is a representation of the package family, actual package may vary.
Refer to the product data sheet for package details.

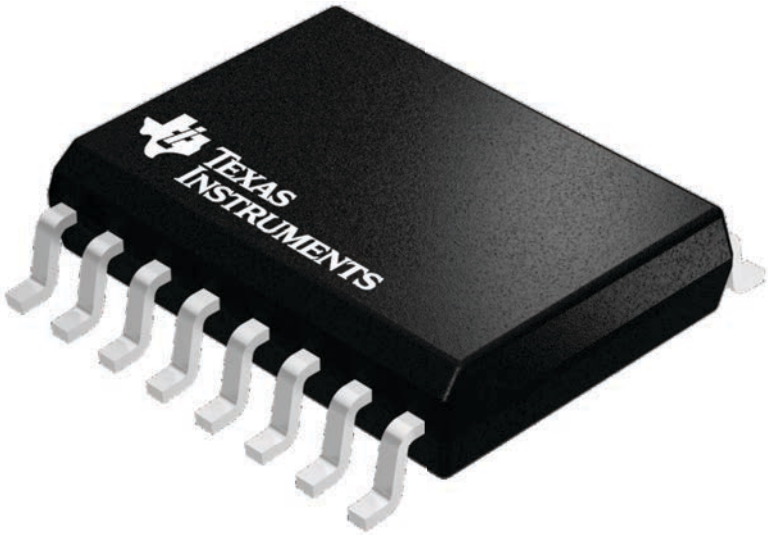

4224780/A

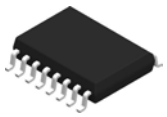

PACKAGE OUTLINE

DW0016A

SOIC - 2.65 mm max height

SOIC

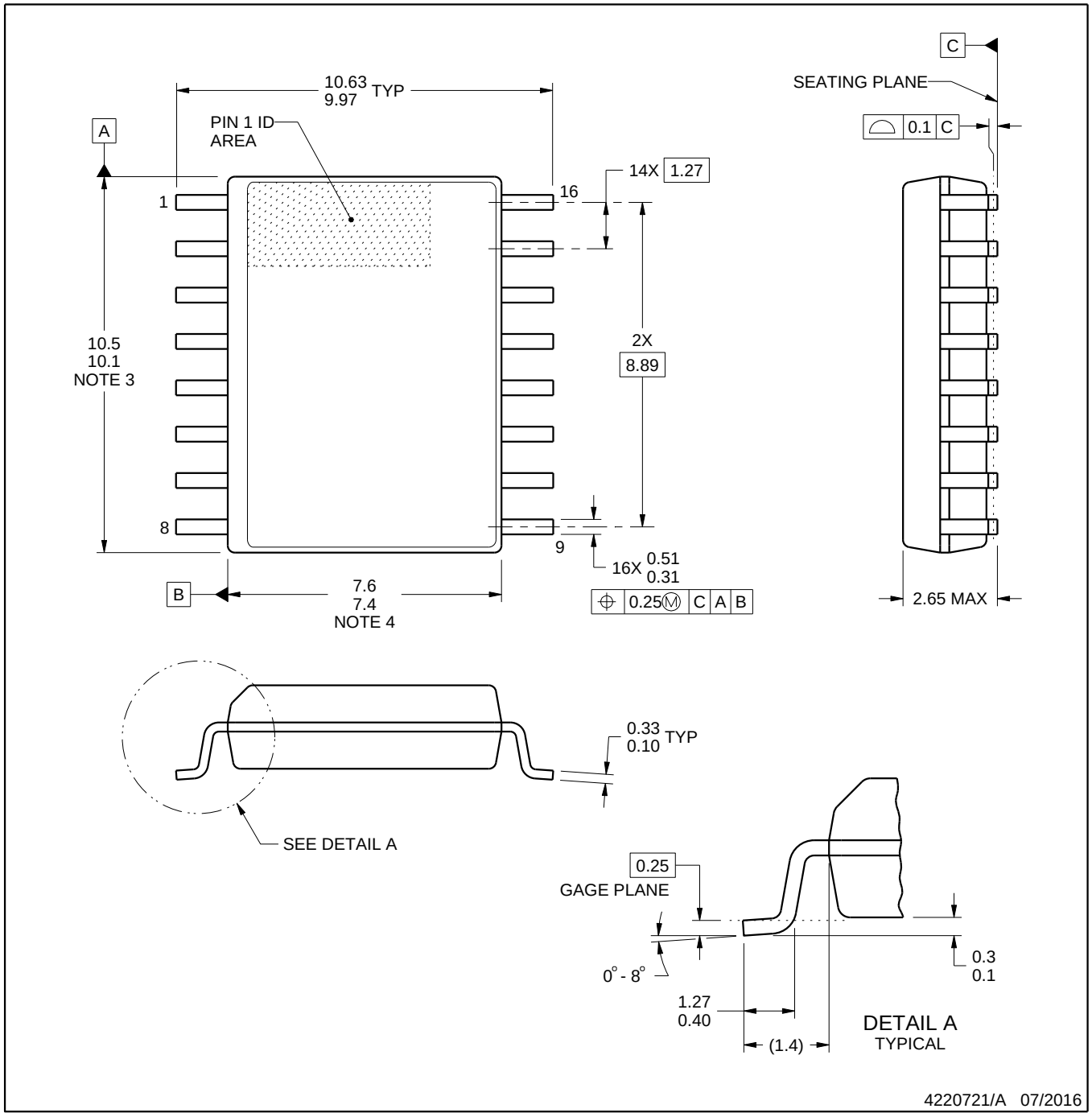

NOTES:

1. All linear dimensions are in millimeters. Dimensions in parenthesis are for reference only. Dimensioning and tolerancing per ASME Y14.5M.
2. This drawing is subject to change without notice.
3. This dimension does not include mold flash, protrusions, or gate burrs. Mold flash, protrusions, or gate burrs shall not exceed 0.15 mm, per side.
4. This dimension does not include interlead flash. Interlead flash shall not exceed 0.25 mm, per side.
5. Reference JEDEC registration MS-013.

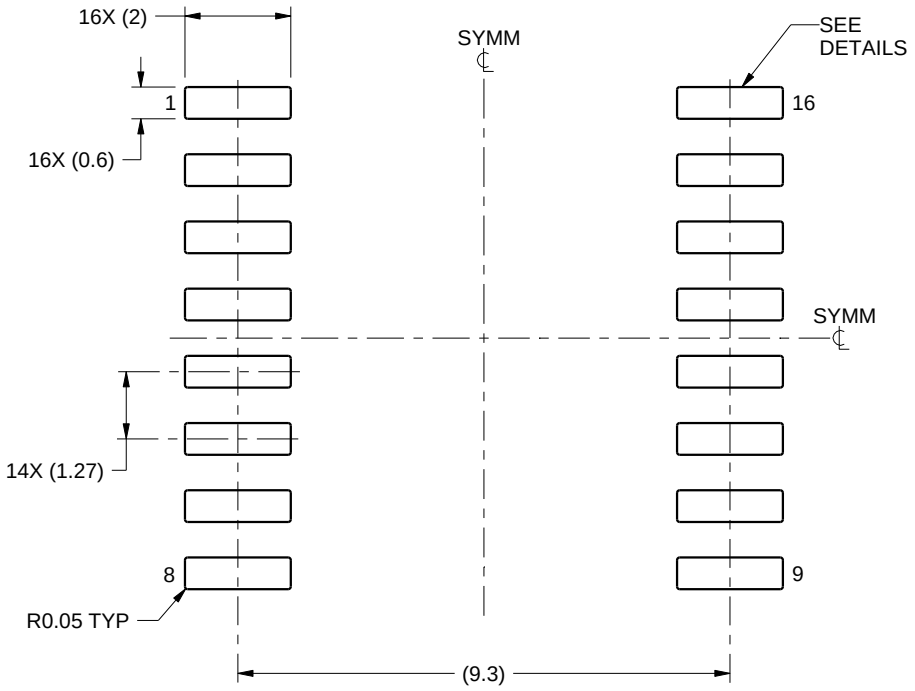

LAND PATTERN EXAMPLE
SCALE:7X

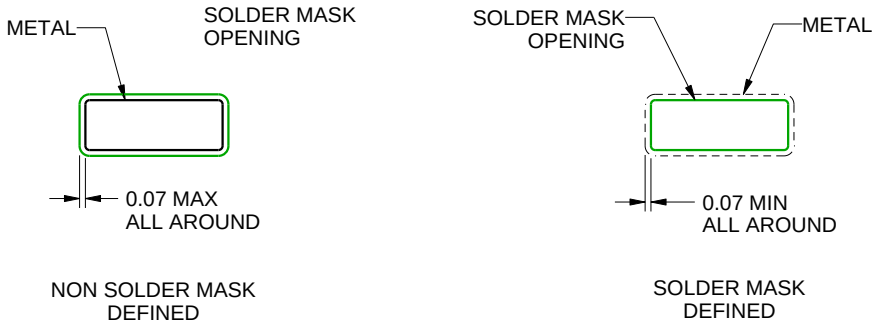

SOLDER MASK DETAILS

4220721/A 07/2016

NOTES: (continued)

6. Publication IPC-7351 may have alternate designs.
7. Solder mask tolerances between and around signal pads can vary based on board fabrication site.

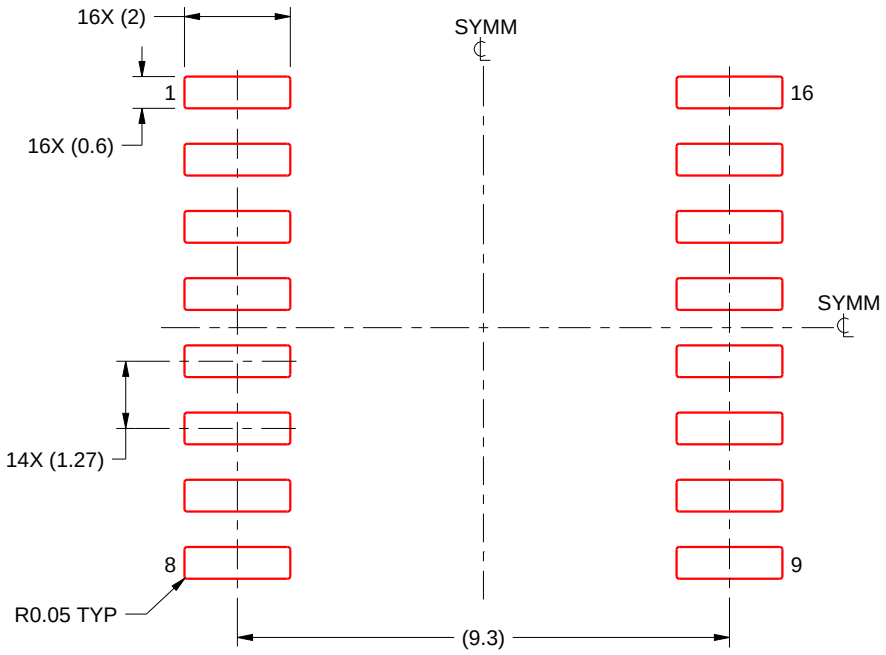

SOLDER PASTE EXAMPLE
BASED ON 0.125 mm THICK STENCIL
SCALE:7X

4220721/A 07/2016

NOTES: (continued)

8. Laser cutting apertures with trapezoidal walls and rounded corners may offer better paste release. IPC-7525 may have alternate design recommendations.
9. Board assembly site may have different recommendations for stencil design.

N (R–PDIP–T**)

PLASTIC DUAL–IN–LINE PACKAGE

16 PINS SHOWN

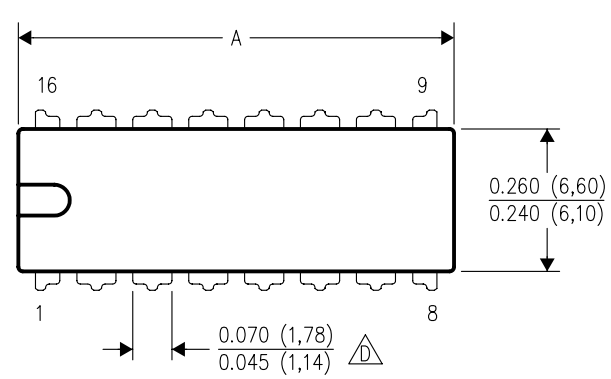

DIM \ PINS **	14	16	18	20
A MAX	0.775 (19,69)	0.775 (19,69)	0.920 (23,37)	1.060 (26,92)
A MIN	0.745 (18,92)	0.745 (18,92)	0.850 (21,59)	0.940 (23,88)
MS–001 VARIATION (C)	AA	BB	AC	AD

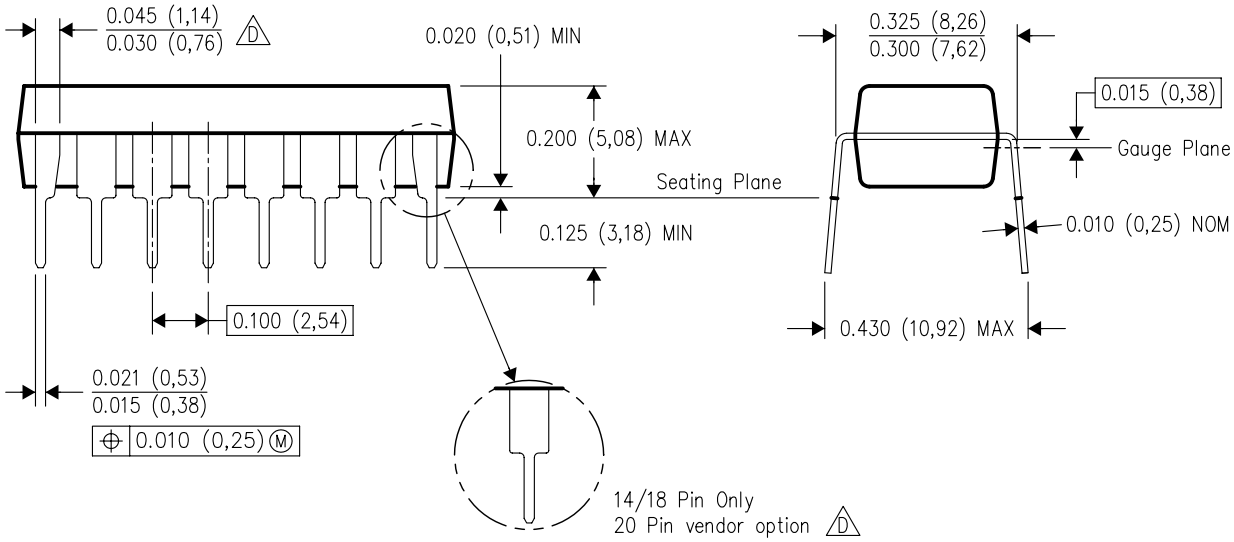

4040049/E 12/2002

NOTES:
A. All linear dimensions are in inches (millimeters).
B. This drawing is subject to change without notice.
C. Falls within JEDEC MS–001, except 18 and 20 pin minimum body length (Dim A).
D. The 20 pin end lead shoulder width is a vendor option, either half or full width.

IMPORTANT NOTICE AND DISCLAIMER

TI PROVIDES TECHNICAL AND RELIABILITY DATA (INCLUDING DATASHEETS), DESIGN RESOURCES (INCLUDING REFERENCE DESIGNS), APPLICATION OR OTHER DESIGN ADVICE, WEB TOOLS, SAFETY INFORMATION, AND OTHER RESOURCES “AS IS” AND WITH ALL FAULTS, AND DISCLAIMS ALL WARRANTIES, EXPRESS AND IMPLIED, INCLUDING WITHOUT LIMITATION ANY IMPLIED WARRANTIES OF MERCHANTABILITY, FITNESS FOR A PARTICULAR PURPOSE OR NON-INFRINGEMENT OF THIRD PARTY INTELLECTUAL PROPERTY RIGHTS.

These resources are intended for skilled developers designing with TI products. You are solely responsible for (1) selecting the appropriate TI products for your application, (2) designing, validating and testing your application, and (3) ensuring your application meets applicable standards, and any other safety, security, regulatory or other requirements.

These resources are subject to change without notice. TI grants you permission to use these resources only for development of an application that uses the TI products described in the resource. Other reproduction and display of these resources is prohibited. No license is granted to any other TI intellectual property right or to any third party intellectual property right. TI disclaims responsibility for, and you fully indemnify TI and its representatives against any claims, damages, costs, losses, and liabilities arising out of your use of these resources.

TI’s products are provided subject to TI’s Terms of Sale, TI’s General Quality Guidelines, or other applicable terms available either on ti.com or provided in conjunction with such TI products. TI’s provision of these resources does not expand or otherwise alter TI’s applicable warranties or warranty disclaimers for TI products. Unless TI explicitly designates a product as custom or customer-specified, TI products are standard, catalog, general purpose devices.

TI objects to and rejects any additional or different terms you may propose.

Copyright © 2026, Texas Instruments Incorporated

Last updated 10/2025