15-A NON-ISOLATED DDR/QDR MEMORY BUS TERMINATION MODULES

FEATURES

- **V_{TT} Bus Termination Output (Output Tracks the System V_{REF})**
- **15 A Output Current (12 A for 12-V Input)**
- **3.3-V, 5-V or 12-V Input Voltage**
- **DDR and QDR Compatible**
- **On/Off Inhibit (for V_{TT} Standby)**
- **Undervoltage Lockout**
- **Operating Temperature: –40°C to 85°C**
- **Efficiencies up to 91%**
- **Output Overcurrent Protection (Nonlatching, Auto-Reset)**
- **62 W/in^3 Power Density**
- **Safety Agency Approvals UL/cUL60950, EN60950, VDE**
- **Point-of-Load Alliance (POLA™) Compatible**



Nominal Size
1.37 in x 0.62 in
34,8 mm x 15,75 mm)

DESCRIPTION

The PTHxx010Y are a series of ready-to-use switching regulator modules from Texas Instruments designed specifically for bus termination in DDR and QDR memory applications. Operating from either a 3.3-V, 5-V or 12-V input, the modules generate a V_{TT} output that will source or sink up to 15 A of current (12 A for 12-V input) to accurately track their V_{REF} input. V_{TT} is the required bus termination supply voltage, and V_{REF} is the reference voltage for the memory and chipset bus receiver comparators. V_{REF} is usually set to half the V_{DDQ} power supply voltage.

Both the PTHxx010Y series employs an actively switched synchronous rectifier output to provide state-of-the-art stepdown switching conversion. The products are small in size (1.37 in × 0.62 in), and are an ideal choice where space, performance, and high efficiency are desired, along with the convenience of a ready-to-use module.

Operating features include an on/off inhibit and output over-current protection (source mode only). The on/off inhibit feature allows the V_{TT} bus to be turned off to save power in a standby mode of operation. To ensure tight load regulation, an output remote sense is also provided. Package options include both throughhole and surface mount configurations.

STANDARD APPLICATION

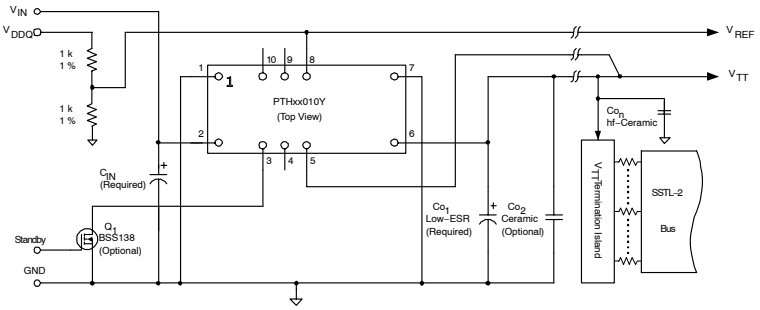

C_{IN} = Required Capacitor; 470 μF (3.3 ± 5 V Input), 560 μF (12 V Input).
Co_1 = Required Low-ESR Electrolyitic Capacitor; 470 μF (3.3 ± 5 V Input), 940 μF (12 V Input).
Co_2 = Ceramic Capacitance for Optimum Response to a 3 A (± 1.5 A) Load Transient; 200 μF (3.3 ± 5 V Input), 400 μF (12 V Input).
Co_n = Distributed hf-Ceramic Decoupling Capacitors for V_{TT} bus; as Recommended for DDR Memory Applications.

Please be aware that an important notice concerning availability, standard warranty, and use in critical applications of Texas Instruments semiconductor products and disclaimers thereto appears at the end of this data sheet.

POLA is a trademark of Texas Instruments.

PRODUCTION DATA information is current as of publication date. Products conform to specifications per the terms of the Texas Instruments standard warranty. Production processing does not necessarily include testing of all parameters.

Copyright © 2004–2005, Texas Instruments Incorporated

ORDERING INFORMATION

PTHXX010Y (Base Part Number)				
Input Voltage	**Part Number (1)**	**DESCRIPTION**	**Pb – free and RoHS**	**Mechanical Package (2)**
3.3 V	PTH03010YAH	Horizontal T/H	Yes (3)	EUH
	PTH03010YAS	Standard SMD	No (4)	EUJ
	PTH03010YAZ	Optional SMD	Yes (3)	EUJ
5 V	PTH05010YAH	Horizontal T/H	Yes (3)	EUH
	PTH05010YAS	Standard SMD	No (4)	EUJ
	PTH05010YAZ	Optional SMD	Yes (3)	EUJ
12 V	PTH12010YAH	Horizontal T/H	Yes (3)	EUH
	PTH12010YAS	Standard SMD	No (4)	EUJ
	PTH12010YAZ	Optional SMD	Yes (3)	EUJ

(1) Add *T* to end of part number for tape and reel on SMD packages only.
(2) Reference the applicable package reference drawing for the dimensions and PC board layout.
(3) *Lead (Pb) –free* option specifies Sn/Ag pin solder material.
(4) *Standard* option specifies 63/37, Sn/Pb pin solder material.

ENVIRONMENTAL AND ABSOLUTE MAXIMUM RATINGS

voltages are with respect to GND

				UNIT
V_{REF}	Control input voltage			–0.3 V to V_{in}+03 V
T_A	Operating temperature range	Over V_{IN} range		–40°C to 85°C (1)
T_{wave}	Wave solder temperature	Surface temperature of module body or pins **(5 seconds)**	PTHXX010YAH	260°C (2)
T_{reflow}	Solder reflow temperature	Surface temperature of module body or pins	PTHXX010YAS	235°C (2)
			PTHXX010YAZ	260°C (2)
T_s	Storage temperature			–40°C to 125°C
	Mechanical shock	Per Mil-STD-883D, Method 2002.3 1 msec, 1/2 Sine, mounted		500 G
	Mechanical vibration	Mil-STD-883D, Method 2007.2 20-2000 Hz		20 G
	Weight			3.7 grams
	Flammability	Meets UL 94V-O		

(1) For operation below 0°C the external capacitors must bave stable characteristics, use either a low ESR tantalum, Os-Con, or ceramic capacitor.
(2) During soldering of package version, do not elevate peak temperature of the module, pins or internal components above the stated maximum.

ELECTRICAL SPECIFICATIONS

T_A = 25°C; nominal V_{IN}; V_{REF} = 1.25 V; C_{IN}, C_O1, and C_O2 = typical values; and I_O = $I_O$max (unless otherwise stated)

PARAMETER		TEST CONDITIONS		MIN	TYP	MAX	UNIT
I_O	Output current	Over ΔV_{REF} range	PTH03010Y/PTH05010Y	0		±15 (1)	A
			PTH12010Y			±12 (1)	
V_{IN}	Input voltage range	Over I_O range	PTH03010Y	2.95		3.65	V
			PTH05010Y	4.5		5.5	
			PTH12010Y	10.8		13.2	
ΔV_{REF}	Tracking range for V_{REF}			0.55		1.8	V
$\lvert V_{TT} - V_{REF} \rvert$	Tracking tolerance to V_{REF}	Over line, load and temperature		–10		10	mV
η	Efficiency	I_o = 10 A	PTH03010Y		88%		
			PTH05010Y		88%		
			PTH12010Y		85%		
V_r	V_o Ripple (pk-pk)	20 MHz bandwidth			20		mVpp
I_o trip	Overcurrent threshold	Reset, followed by auto recovery	PTH03010Y/PTH05010Y		27.5		A
			PTH12010Y		20		
t_{tr}	Load transient response	15 A/μs load step, from –1.5 A to 1.5 A	Recovery time		30		μsec
V_{tr}			V_O over/undershoot		30	40	mV
UVLO	Under-voltage lockout	V_{IN} Increasing	PTH03010Y		2.45	2.8	V
			PTH05010Y		4.3	4.45	
			PTH12010Y		9.5	10.4	
		V_{IN} Dncreasing	PTH03010Y	2.0	2.40		V
			PTH05010Y	3.4	3.7		
			PTH12010Y	8.8	9		
V_{IH}	Inhibit control (pin 4) Input high voltage	Referenced to GND		V_{IN}–0.5		Open (2)	V
V_{IL}	Inhibit control (pin 4) Input low voltage			–0.2		0.6	V
I_{IL} inhibit	Inhibit control (pin 4) Input low curent	Pin to GND			130		μA
I_{IN} inh	Input standby current	Inhibit (pin 3) to GND			10		mA
f_s	Switching frequency	Over V_{IN} and I_O ranges	PTH03010Y/PTH05010Y	250	300	350	kHz
			PTH12010Y	200	250	300	
C_{IN}	External input capacitance		PTH03010Y/PTH05010Y	470 (3)			μF
			PTH12010Y	560 (3)			
C_O1, C_O2	External output capacitance	Capacitance value: Nonceramic	PTH03010Y/PTH05010Y	470 (4)		8200 (5)	μF
			PTH12010Y	940 (4)		6600 (5)	
		Capacitance value: Ceramic	PTH03010Y/PTH05010Y		200 (4)	300	μF
			PTH12010Y		400 (4)	600	
		Equiv. series resistance (non-ceramic)		4 (6)			mΩ
MTBF	Reliability	Per Bellcore TR-332 50 % stress, T_A = 40°C, ground benign		6			10^6 Hrs

(1) Rating is conditional on the module being directly soldered to a 4-layer PCB with 1 oz. copper. See the SOA curves or contact the factory for appropriate derating.
(2) This control pin has an internal pull-up to the input voltage V_{IN}. If it is left open-circuit the module will operate when input power is applied. A small low-leakage (<100 nA) MOSFET is recommended for control. For further information, consult the related application note.
(3) An input capacitor is required for proper operation. The capacitor must be rated for a minimum a minimum of 500 mA rms(750 mA rms for 12-V input) of ripple current.
(4) The minimum value of external output capacitance value ensures that V_{TT} meets the specified transient performance requirements for the memory bus terminations. Lower values of capacitance may be possible when the *measured* peak change in output current is consistently less than 3 A.
(5) This is the calculated maximum. The minimum ESR limitation will often result in a lower value. Consult the application notes for further guidance.
(6) This is the typcial ESR for all the electrolytic (non-ceramic) output capacitance. Use 7 mΩ as the minimum when using max-ESR values to calculate.

Terminal Functions

TERMINAL		DESCRIPTION
NAME	NO.	
V_{IN}	2	The positive input voltage power node to the module, which is referenced to common GND.
GND	1, 7	This is the common ground connection for the V_{IN} and V_{TT} power connections. It is also the 0-VDC reference for the control inputs.
V_{REF}	8	The module senses the voltage at this input to regulate the output voltage, V_{TT}. The voltage at V_{REF} is also the reference voltage for the system bus receiver comparators. It is normally set to precisely half the bus driver supply voltage (V_{DDQ}÷ 2), using a resistor divider. The Thevenin impedance of the network driving the V_{REF} pin should not exceed 500 Ω. See the Typical DDR Application Diagram in the Application Information section for reference.
V_{TT}	6	This is the regulated power output from the module with respect to the GND node, and the tracking termination supply for the application data and address buses. It is precisely regulated to the voltage applied to the module's V_{REF} input, and is active active about 20 ms after a valid input source is applied to the module. Once active it will track the voltage applied at V_{REF}.
V_o Sense	5	The sense input allows the regulation circuit to compensate for voltage drop between the module and the load. For optimal voltage accuracy V_o Sense should be connected to V_{TT}.
Inhibit	3	The Inhibit pin is an open-collector/drain negative logic input that is referenced to GND. Applying a low-level ground signal to this input turns off the output voltage, V_{TT}. Although the module is inhibited, a voltage, V_{DDQ} will be present at the output terminals, fed through the DDR memory. When the Inhibit is active, the input current drawn by the regulator is significantly reduced. If the Inhibit pin is left open circuit, the module will produce an output whenever a valid input source is applied. See the Typical DDR Application Diagram in the Application Information section for reference.
N/C	4, 9, 10	No connection

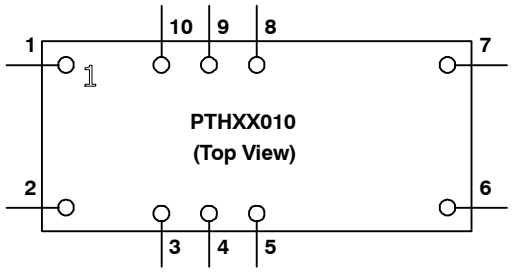

TYPICAL CHARACTERISTICS (V_{REF} = 1.25 V)(1)(2)

EFFICIENCY vs LOAD CURRENT

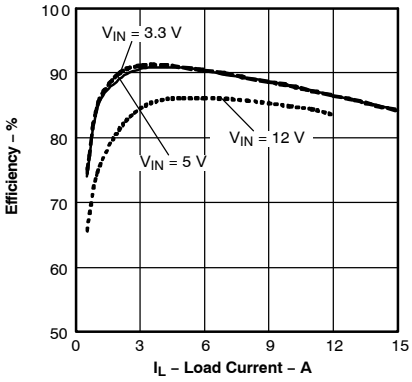

Figure 1.

OUTPUT RIPPLE vs LOAD CURRENT

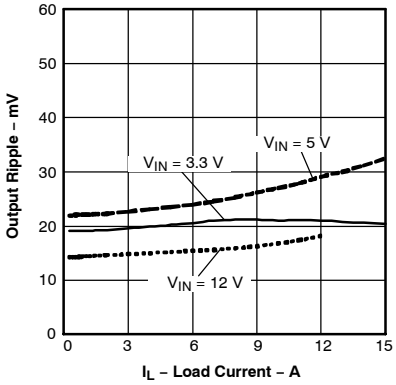

Figure 2.

POWER DISSIPATION vs LOAD CURRENT

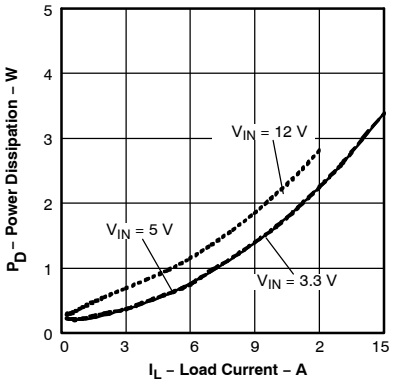

Figure 3.

PTH03010Y/PTH05010Y AT NOMINAL V_{IN} TEMPERATURE DERATING vs LOAD CURRENT

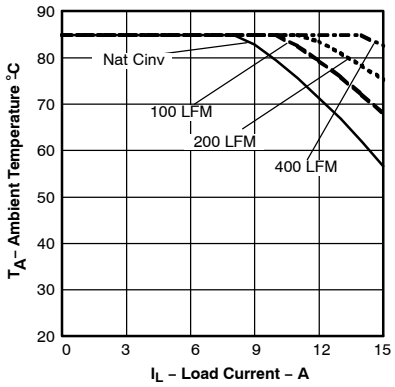

Figure 4.

PTH12010Y ONLY; V_{IN} = 12 V TEMPERATURE DERATING vs LOAD CURRENT

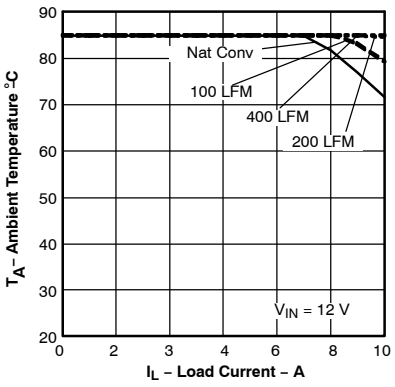

Figure 5.

(1) The electrical characteristic data has been developed from actual products tested at 25°C. This data is considered typical for the converter. Applies to Figure 1, Figure 2, and Figure 3.

(2) The temperature derating curves represent the conditions at which internal components are at or below the manufacturer's maximum operating temperatures. Derating limits apply to modules soldered directly to a 4 in x 4 in double-sided PCB with 1 oz. copper. For surface mount packages (AS and AZ suffix), multiple vias (plated through holes) are required to add thermal paths around the power pins. Please refer to the mechanical specification for more information. Applies to Figure 4, and Figure 5.

TYPICAL CHARACTERISTICS

TRANSIENT PERFORMANCE FOR Δ3-A LOAD CHANGE

PTH03010Y/PTH05010Y: SOURCE-SINK-SOURCE TRANSIENT

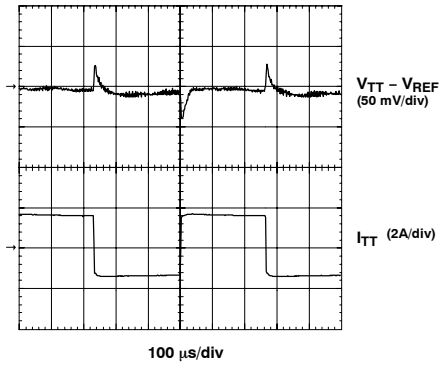

Figure 6.

PTH12010Y: SOURCE-SINK-SOURCE TRANSIENT

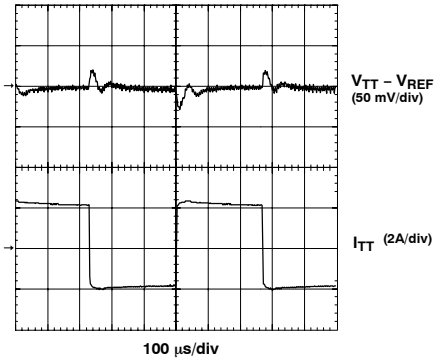

Figure 7.

APPLICATION INFORMATION

Typical DDR Application Diagram

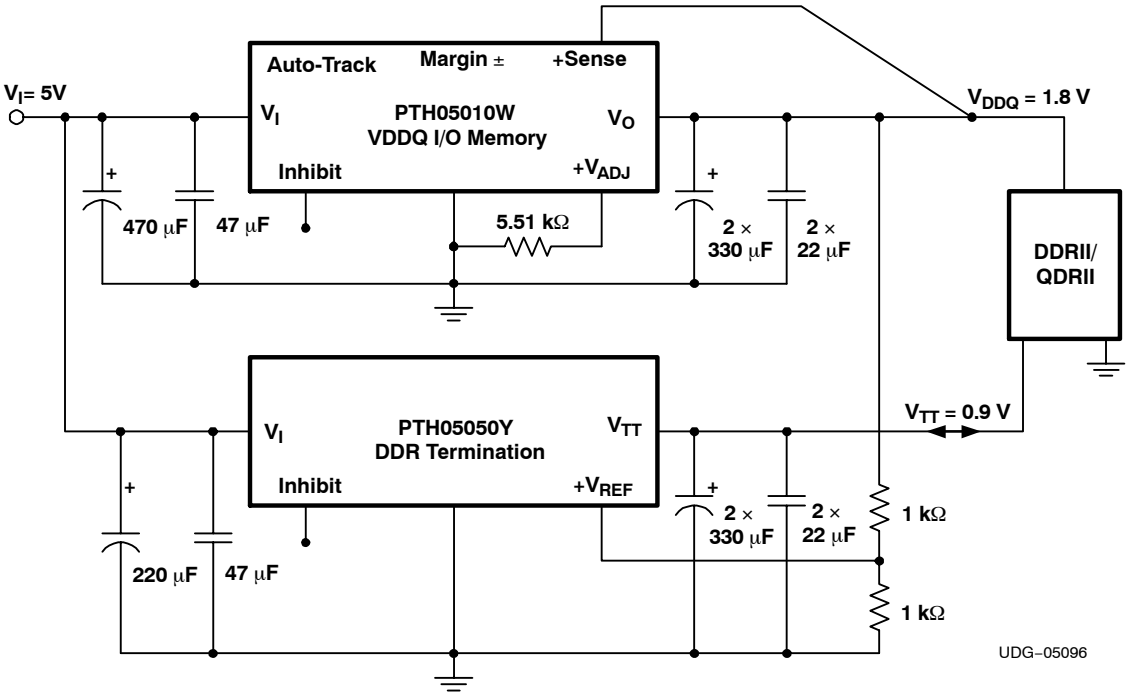

CAPACITOR RECOMMENDATIONS FOR THE PTH03010Y AND PTH05010Y DDR POWER MODULES (3.3-V/5-V OPTION)

Input Capacitor

The recommended input capacitor(s) is determined by the 470 µF minimum capacitance and 500 mArms minimum ripple current rating.

Ripple current, less than 160 mΩ equivalent series resistance (ESR), and temperature are the major considerations when selecting input capacitors. Unlike polymer tantalum, regular tantalum capacitors have a recommended minimum voltage rating of 2 × (maximum dc voltage + ac ripple). This is standard practice to ensure reliability.

For improved ripple reduction on the input bus, ceramic capacitors may used to complement electrolytic types to achieve the minimum required capacitance.

Output Capacitors

For applications with load transients (sudden changes in load current), regulator response benefits from external output capacitance. The recommended output capacitance of 470 µF will allow the modue to meet its transieint response specification. (See Electrical Specifications table). For most applications, a high quality computer-grade aluminum electrolytic capacitor is adequate. These capacitors provide decoupling over the frequency range, 2 kHz to 150 kHz, and are suitable for ambient temperatures above 0°C. Below 0°C, tantalum, ceramic or Os-Con type capacitors are recommended. When using one or more nonceramic capacitors, the calculated equivalent ESR should be no lower than 4 mΩ (7 mΩ using the manufacturer's maximum ESR for a single capacitor).

A list of preferred low-ESR type capacitors are identified in Table 1. In addition to electrolytic capacitance, adding a 10-μF to 22-µF X5R/X7R ceramic capacitor to the output reduces the output ripple voltage and improve the regulator's transient response. The measurement of both the output ripple and transient response is also best achieved across a 10-μF ceramic capacitor.

APPLICATION INFORMATION (continued)

Ceramic Capacitors

Above 150 kHz the performance of aluminum electrolytic capacitors becomes less effective. To further improve the reflected input ripple current or the output transient response, multilayer ceramic capacitors can be added. Ceramic capacitors have very low ESR and their resonant frequency is higher than the bandwidth of the regulator. When used on the output their combined ESR is not critical as long as the total value of ceramic capacitance does not exceed 300 μF. Also, to prevent the formation of local resonances, do not place more than five identical ceramic capacitors in parallel with values of 10 μF or greater.

Tantalum Capacitors

Tantalum type capacitors can be used at both the input and output, and are recommended for applications where the ambient operating temperature can be less than 0°C. The AVX TPS, Sprague 593D/594/595, and Kemet T495/T510 capacitor series are suggested over many other tantalum types due to their higher rated surge, power dissipation, and ripple current capability. As a caution, many general-purpose tantalum capacitors have considerably higher ESR, reduced power dissipation and lower ripple current capability. These capacitors are also less reliable as they have lower power dissipation and surge current ratings. Tantalum capacitors that do not have a stated ESR or surge current rating are not recommended for power applications.

When specifying Os-Con and polymer tantalum capacitors for the output, the minimum ESR limit is encountered before the maximum capacitance value is reached.

Capacitor Table

Table 1 identifies the characteristics of capacitors from a number of vendors with acceptable ESR and ripple current (rms) ratings. The recommended number of capacitors required at both the input and output buses is identified for each capacitor type.

This is not an extensive capacitor list. Capacitors from other vendors are available with comparable specifications. Those listed are for guidance. The RMS ripple current rating and ESR (at 100 kHz) are critical parameters necessary to ensure both optimum regulator performance and long capacitor life.

Table 1. Input/Output Capacitors (1)

Capacitor Vendor, Type/Series (Style)	Capacitor Characteristics					Quantity		Vendor Part Number
	Working Voltage (V)	Value (μF)	Max ESR at 100 kHz (Ω)	Max Ripple Current at 85°C (Irms) (mA)	Physical Size (mm)	Input Bus	Output Bus	
Panasonic, Aluminum								
FC (Radial)	10	470	0.117	555	8 × 11,5	1	1	EEUFC1A471
FC (SMD)	10	470	0.150	670	10 × 10,2	1	1	EEUFC1A471P
FK (SMD)	10	470	0.160	600	8× 10,2	1	1	EEVFK1A471P
United Chemi-Con								
PXA, Poly-Aluminum (SMD)	6.3	470	0.020	4130	10 × 7,7	1	≤2	PXA6.3VC471MJ80TP
PS, Poly-Aluminum (Radial)	10	470	0.012	5300	10 × 12,5	1	≤1	10PS470MJ12
LXZ, Aluminum (Radial)	16	470	0.120	555	8 × 12	1	1	LXZ10VB471M8X12LL
Nichicon Aluminum								
WG(SMD)	10	470	0.150	670 mA	10 × 10	1	1	UWG1A471MNR1GS
HD (Radial)	10	470	0.072	760	8 × 11,5	1	1	UHD1A471MPR
PM (Radial)	10	470	0.130	600	10 × 12,5	1	1	UPM1A471MPH6

(1) **Capacitor Supplier Verification**
Please verify availability of capacitors identified in this table. Capacitor suppliers may recommend alternative part numbers because of limited availability or obsolete products. In some instances, the capacitor product life cycle may be in decline and have short-term consideration for obsolescence.
RoHS, Lead-free and Material Details
Please consult capacitor suppliers regarding material composition, RoHS status, lead-free status, and manufacturing process requirements. Component designators or part number deviations can occur when material composition or soldering requirements are updated.

APPLICATION INFORMATION (continued)

Table 1. Input/Output Capacitors (continued)

Capacitor Vendor, Type/Series (Style)	Capacitor Characteristics					Quantity		Vendor Part Number
	Working Voltage (V)	Value (μF)	Max ESR at 100 kHz (Ω)	Max Ripple Current at 85°C (Irms) (mA)	Physical Size (mm)	Input Bus	Output Bus	
Panasonic, Poly-Aluminum:								
S/SE (SMD)	6.3	180	0.005	4000	7,3 × 4,3 × 4,2	2 (2)	N/R (3)	EEFSE0J181R
Sanyo								
SEPC, Os-con (Radial)	6.3	470	0.008	5700	10 × 13	1	≤1	6SEPC470M
SVP, (SMD)	6.3	470	0.015	4200	11 × 11,9	1	≤2	6SVP470M
TPE, Poscap (SMD)	6.3	470	0.018	3500	7,3 × 4,3	1	≤2	6TPE470MI
AVX, Tantalum TPS (SMD)	10	470	0.045	1723	7,3 L × 5,7 W × 4,1 H	1	≤5	TPSE477M010R0045
	10	470	0.060	1826		1	≤5	TPSV477M010R0060
Kemet, Poly-Tantalum								
T520, (SMD)	10	330	0.040	1800	4,3 W × 7,3 L × 4 H	2	≤5	T520X337M010AS
T530, (SMD)	10	330	0.010	5200		2	≤1	T530X337M010ASE010
Vishay-Sprague								
595D, Tantalum (SMD)	10	470	0.100	1440	7,2 L × 6 W	1	≤5	595D477x0010r2t
94SP, Poly Aluminum (Radial)	10	470	0.015	4510	10 × 10	1	≤2	94SP477X0010FBP
94SVP, Poly-Aluminum (SMD)	6.3	470	0.017	3960	8 × 12	1	≤3	94SVP477X06R3E12
Kemet, Ceramic X5R (SMD)	16	10	0.002	–	3225 mm	1	≤5	C1210C106M4PAC
	6.3	47			3225 mm	1	≤5	C1210C476K9PAC
Murata, Ceramic X5R (SMD)	6.3	100	0.002	–	3225 mm	1 (4)	≤3	GRM32ER60J107M
	6.3	47			3225 mm	1 (4)	≤5	GRM32ER60J476M
	16	22				1 (4)	≤5	GRM32ER61C226K
	16	10				1 (4)	≤5	GRM32DR61C106K
TDK, Ceramic X5R (SMD)	6.3	100	0.002	–	3225 mm	1 (4)	≤3	C3225X5R0J107MT
	6.3	47			3225 mm	1 (4)	≤5	C3225X5R0J476MT
	16	22				1 (4)	≤5	C3225X5R1C226MT
	16	10				1 (4)	≤5	C3225X5R1C106MT

(2) A total capacitance of 360 μF is acceptable based on the combined ripple current rating.
(3) N/R –Not recommended. The capacitor voltage rating does not meet the minimum derated operating limits.
(4) A ceramic capacitor is recoommended to compliment electrolytic types at the input to further reduce high-frequency ripple current.

Designing for Very Fast Load Transients

The transient response of the dc/dc converter has been characterized using a load transient with a di/dt of 1 A/μs. The typical voltage deviation for this load transient is given in the data sheet specification table using the optional value of output capacitance. As the di/dt of a transient is increased, the response of a converter's regulation circuit ultimately depends on its output capacitor decoupling network. This is an inherent limitation with any dc/dc converter once the speed of the transient exceeds its bandwidth capability. If the target application specifies a higher di/dt or lower voltage deviation, the requirement can only be met with additional output capacitor decoupling. In these cases special attention must be paid to the type, value and ESR of the capacitors selected.

If the transient performance requirements exceed that specified in the data sheet, or the total amount of load capacitance is above 8200 μF, the selection of output capacitors becomes more important.

CAPACITOR RECOMMENDATIONS FOR THE PTH12010Y DDR POWER MODULES (12-V OPTION)

INPUT CAPACITOR

The recommended input capacitance is determined by the 560 μF minimum capacitance and 750 mArms minimum ripple current rating. A 10-μF X5R/X7R ceramic capacitor may also be added to reduce the reflected input ripple current. The ceramic capacitor should be located between the input electrolytic and the module.

Ripple current, less than 100 mΩ equivalent series resistance (ESR) and temperature are major considerations when selecting input capacitors. Unlike polymer-tantalum capacitors, regular tantalum capacitors have a recommended minimum voltage rating of 2 × (max dc voltage + ac ripple). This is standard practice to ensure reliability. No tantalum capacitors were found with sufficient voltage rating to meet this requirement. At temperatures below 0°C, the ESR of aluminum electrolytic capacitors increases. For these applications, Os-Con, polymer-tantalum, and polymer-aluminum types should be considered.

OUTPUT CAPACITORS

For applications with load transients (sudden changes in load current), regulator response benefits from external output capacitance. The recommended output capacitance of 940 μF will allow the modue to meet its transieint response specification. (See Electrical Specifications table). For most applications, a high quality computer-grade aluminum electrolytic capacitor is adequate. These capacitors provide decoupling over the frequency range, 2 kHz to 150 kHz, and are suitable for ambient temperatures above 0°C. Below 0°C, tantalum, ceramic or Os-Con type capacitors are recommended. When using one or more nonceramic capacitors, the calculated equivalent ESR should be no lower than 4 mΩ (7 mΩ using the manufacturer's maximum ESR for a single capacitor).

A list of preferred low-ESR type capacitors are identified in Table 2.

In addition to electrolytic capacitance, adding a 10-μF to 22-μF X5R/X7R ceramic capacitor to the output reduces the output ripple voltage and improve the regulator's transient response. The measurement of both the output ripple and transient response is also best achieved across a 10-μF ceramic capacitor.

CERAMIC CAPACITORS

Above 150 kHz the performance of aluminum electrolytic capacitors is less effective. Multilayer ceramic capacitors have very low ESR and a resonant frequency higher than the bandwidth of the regulator. They can be used to reduce the reflected ripple current at the input as well as improve the transient response of the output. When used on the output, their combined ESR is not critical as long as the total value of ceramic capacitance does not exceed 300 μF. Also, to prevent the formation of local resonances, do not place more than five identical ceramic capacitors in parallel with values of 10 μF or greater.

TANTALUM CAPACITORS

Tantalum type capacitors are most suited for use on the output bus, and are recommended for applications where the ambient operating temperature can be less than 0°C. The AVX TPS, Sprague 593D/594/595 and Kemet T495/T510 capacitor series are suggested over other tantalum types due to their higher rated surge, power dissipation, and ripple current capability. As a caution, many general purpose tantalum capacitors have considerably higher ESR, reduced power dissipation and lower ripple current capability. These capacitors are also less reliable as they have lower power dissipation and surge current ratings. Tantalum capacitors that do not have a stated ESR or surge current rating are not recommended for power applications.

When specifying Os-con and polymer tantalum capacitors for the output, the minimum ESR limit are encountered well before the maximum capacitance value is reached.

CAPACITOR TABLE

Table 2 identifies the characteristics of capacitors from a number of vendors with acceptable ESR and ripple current (rms) ratings. The recommended number of capacitors required at both the input and output buses is identified for each capacitor type.

This is not an extensive capacitor list. Capacitors from other vendors are available with comparable specifications. Those listed are for guidance. The RMS ripple current rating and ESR (at 100 kHz) are critical parameters necessary to insure both optimum regulator performance and long capacitor life.

Table 2. Input/Output Capacitors (1)

CAPACITOR VENDOR, TYPE/SERIES, (STYLE)	CAPACITOR CHARACTERISTICS					QUANTITY		
	WORKING VOLTAGE	VALUE (μF)	MAX. ESR AT 100 kHz	MAX RIPPLE CURRENT AT 85°C (Irms)	PHYSICAL SIZE (mm)	INPUT BUS	OPTIONAL OUTPUT BUS	VENDOR PART NUMBER
Panasonic, Aluminum (FC)	25 V	560	0.065 Ω	1205 mA	12,5 x 15	1	1	EEUFC1E561S
FC, Radial	25 V	1000	0.060 Ω	1100 mA	12,5 x 13,5	1	1	EEVFK1E102Q
FK, (SMD)	35 V	680	0.060 Ω	1100 mA	12,5 x 13,5	1	1	EEVFK1V681Q
United Chemi-Con								
PS, Poly-Aluminum (Radial)	16 V	330	0.014 Ω	5050 mA	10 x 12,5	2	≤2	16PS330MJ12
LXZ, Aluminium (Radial)	16 V	680	0.068 Ω	1050 mA	10 x 16	1	1	LXZ16VB681M10X16LL
PXA, Poly-Aluminum (SMD)	16 V	330	0.014 Ω	5050 mA	10 x 12,2	2	≤2	PXA16VC331MJ12TP
Nichicon, Aluminum (PM)	25 V	560	0.060 Ω	1060 mA	12,5 x 15	1	1	UPM1E561MHH6
HD, (Radial)	16 V	680	0.038 Ω	1430 mA	10 x 16	1	1	UHD1C681MPR
PM, (Radial)	35 V	560	0.048 Ω	1360 mA	16 x 15	1	1	UPM1V561MHH6
Sanyo TPE Poscap (SMD)	10 V	330	0.025 Ω	3000 mA	7,3 L x 5,7 W	N/R (2)	≤3	10TPE330M
SEQP, Os-Con (Radial)	16 V	330	0.016 Ω	>4720 mA	10 x 13	2	≤2	16SEQP330M
SVP, Os-Con (SMD)	16 V	330	0.016 Ω	4700 mA	11 x 12	2	≤2	16SVP330M
AVX, Tantalum Series III TPS (SMD)	10 V	470	0.045 Ω	>1723 mA	7,3L x 5,7W	N/R (2)	≤5 (3)	TPSE477M010R0045
	10 V	330	0.045 Ω	>1723 mA	x 4,1H	N/R (2)	≤5 (3)	TPSE377M010R0045
Kemet								
T520, Poly-Tantalum (SMD)	10 V	330	0.040 Ω	1800 mA	7,3 L	N/R (2)	≤5	T520X337M010AS
T530, Poly-Tant/Organic	10 V	330	0.010 Ω	>3800 mA	x 4,3 W	N/R (2)	≤1	T530X337M010ASE010
	6.3 V	470	0.005 Ω	4200 mA	x 4 H	N/R (2)	≤1 (3)	T530X477M006AS E005
Vishay-Sprague 595D, Tantalum (SMD)	10 V	470	0.100 Ω	1440 mA	7,2L x 6W x 4,1H	N/R (2)	≤5 (3)	595D477X0010R2T
94SA, Os-con (Radial)	16 V	1000	0.015Ω	9750 mA	16 x 25	1	≤2	94SA108X0016HBP
94SVP, Os-CON(SMD)	16V	330	0.017Ω	4580 mA	10 x 12,7	2 (4)	≤2	94SVP337X0016F12
Kemet, Ceramic X5R (SMD)	16 V	10	0.002 Ω	-	3225 mm	1 (5)	≤5	C1210C106M4PAC
	6.3 V	47	0.002 Ω		3225 mm	N/R (2)	≤5	C1210C476K9PAC
Murata, Ceramic X5R (SMD)	6.3 V	100	0.002 Ω	-	3225 mm	N/R (2)	≤3	GRM32ER60J107M
	16 V	47			3225 mm	1 (5)	≤5	GRM32ER61CJ476K
	16 V	22				1 (5)	≤5	GRM32ER61C226K
	16 V	10				1 (5)	≤5	GRM32DR61C106K
TDK, Ceramic X5R (SMD)	6.3 V	100	0.002 Ω	-	3225 mm	N/R (2)	≤3	C3225X5R0J107MT
	6.3 V	47			3225 mm	N/R (2)	≤5	C3225X5R0J476MT
	16 V	22				1 (5)	≤5	C3225X5R1C226MT
	16 V	10				1 (5)	≤5	C3225X5R1C106MT

(1) **Capacitor Supplier Verification**
Please verify availability of capacitors identified in this table. Capacitor suppliers may recommend alternative part numbers because of limited availability or obsolete products. In some instances, the capacitor product life cycle may be in decline and have short-term consideration for obsolescence.
RoHS, Lead-free and Material Details
Please consult capacitor suppliers regarding material composition, RoHS status, lead-free status, and manufacturing process requirements. Component designators or part number deviations can occur when material composition or soldering requirements are updated.
(2) N/R –Not recommended. The capacitor voltage rating does not meet the minimum derated operating limits.
(3) The voltage rating of this capacitor only allows it to be used for output voltages that are equal to or less than 5.1 V.
(4) A total capacitance of 540 μF is acceptable based on the combined ripple current rating.
(5) A ceramic capacitor can be used to complement electrolytic types at the input further reduce high-frequency ripple current.

DESIGNING FOR VERY FAST LOAD TRANSIENTS

The transient response of the DC/DC converter has been characterized using a load transient with a di/dt of 1 A/μs. The typical voltage deviation for this load transient is given in the data sheet specification table using the optional value of output capacitance. As the di/dt of a transient is increased, the response of a converter's regulation circuit ultimately depends on its output capacitor decoupling network. This is an inherent limitation with any dc/dc converter once the speed of the transient exceeds its bandwidth capability. If the target application specifies a higher di/dt or lower voltage deviation, the requirement can only be met with additional output capacitor decoupling. In these cases special attention must be paid to the type, value and ESR of the capacitors selected.

If the transient performance requirements exceed that specified in the data sheet, or the total amount of load capacitance is above 6600 μF, the selection of output capacitors becomes more important.

TAPE AND REEL SPECIFICATION

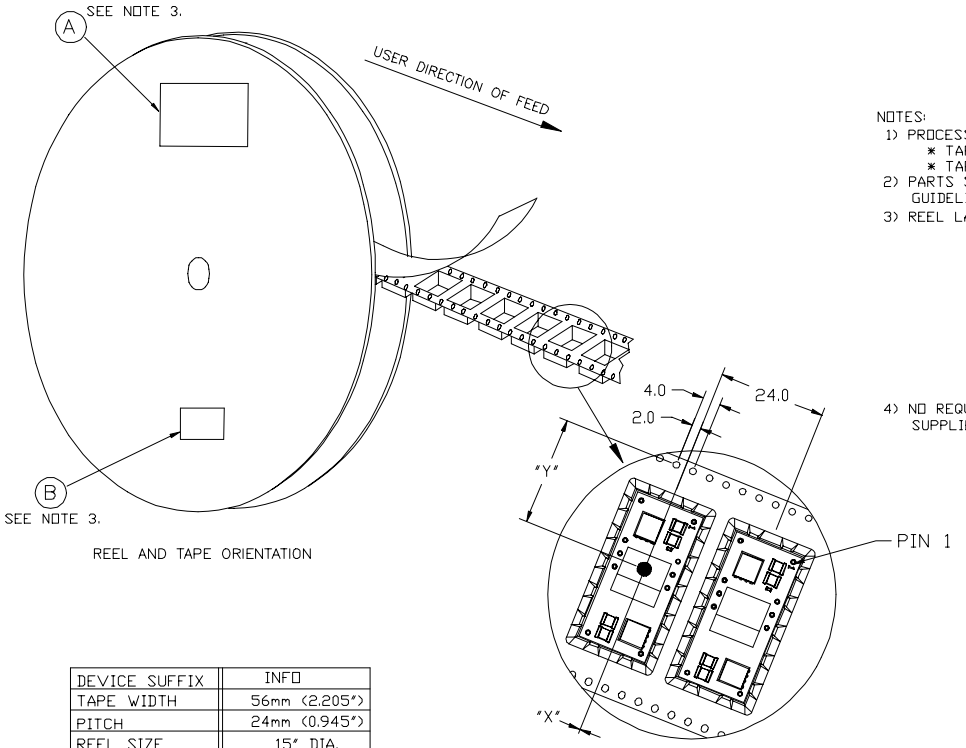

REEL AND TAPE ORIENTATION

NOTES:
1) PROCESS IN ACCORDANCE WITH EIA-481-2
   * TAPE LEADER DIMENSION 15.30" MIN.
   * TAPE TRAILER DIMENSION 6.30" MIN.
2) PARTS SHOULD BE PACKAGED IN ACCORDANCE WITH ESD GUIDELINES IN EIA-541.
3) REEL LABEL: "A"- * TI PART NUMBER.
   * QUANTITY
   * DATE CODE
   * LOT NUMBER
   * MSL DATA
   * MADE IN
   * ASSY SITE ORIGIN
   * COUNTRY OF ORIGIN
   * SUPPLIER

   "B"- ANTI-STATIC CAUTION LABEL
4) NO REQUIREMENT FOR TAPE DIRECTION OF FEED FROM SUPPLIER REEL.

PTXXXX1X	"X"	"Y"
PTH03010/05010	0.0mm	24.3mm
PTH12010	0.0mm	23.8mm

DEVICE SUFFIX	INFO
TAPE WIDTH	56mm (2.205")
PITCH	24mm (0.945")
REEL SIZE	15" DIA.
DEVICES/REEL	250

TRAY SPECIFICATION

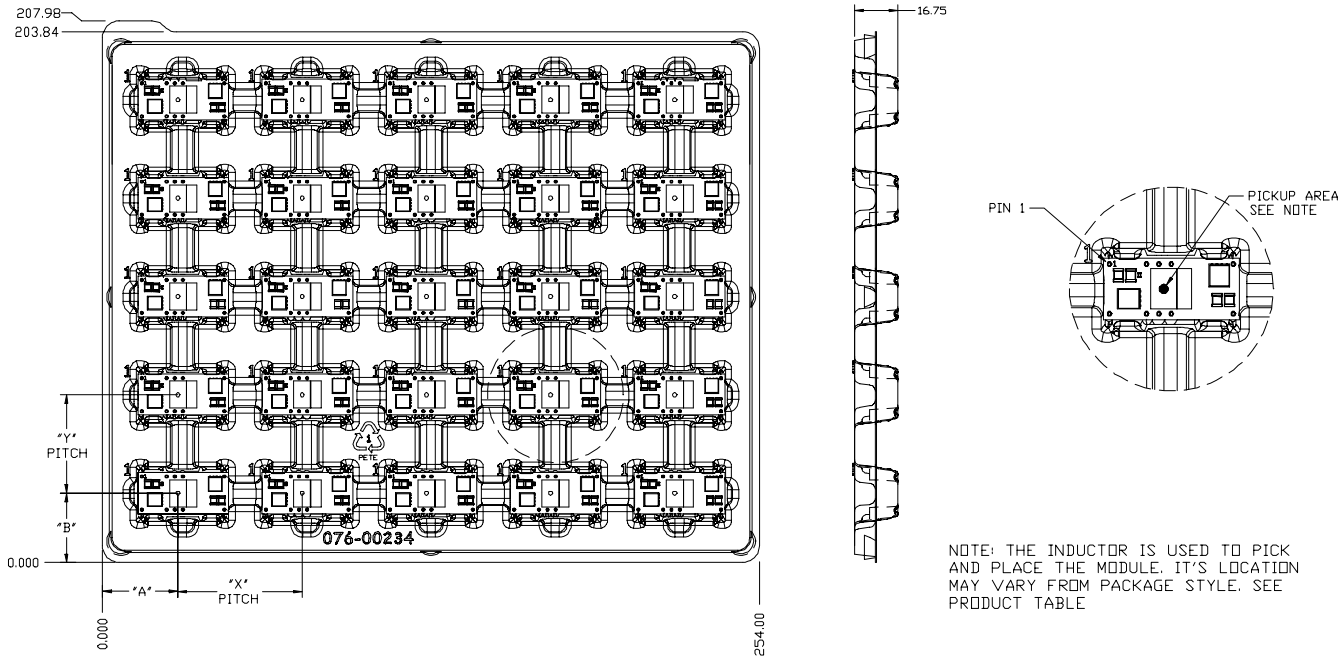

NOTE: THE INDUCTOR IS USED TO PICK AND PLACE THE MODULE. IT'S LOCATION MAY VARY FROM PACKAGE STYLE. SEE PRODUCT TABLE

PTXXXX1X	"A"	"B"	"X"	"Y"
PTH03010/05010	28.99	26.64	47.73	37.77
PTH12010	28.48	26.64		
ALL DIMENSIONS ARE IN MILLIMETER.				

DEVICES/TRAY	25

PACKAGING INFORMATION

Orderable part number	Status (1)	Material type (2)	Package | Pins	Package qty | Carrier	RoHS (3)	Lead finish/ Ball material (4)	MSL rating/ Peak reflow (5)	Op temp (°C)	Part marking (6)
PTH03010YAD	Obsolete	Production	Through-Hole Module (EUH) | 10	-	-			-40 to 85	
PTH05010YAZ	Obsolete	Production	Surface Mount Module (EUJ) | 10	-	-			-40 to 85	
PTH12010YAH	Active	Production	Through-Hole Module (EUH) | 10	25 | TIW TRAY	Exempt	SN	N/A for Pkg Type	-40 to 85	
PTH12010YAST	Active	Production	Surface Mount Module (EUJ) | 10	250 | SMALL T&R	No	SNPB	Level-1-235C-UNLIM/ Level-3-260C-168HRS	-40 to 85	
PTH12010YAST.B	Active	Production	Surface Mount Module (EUJ) | 10	250 | SMALL T&R	No	SNPB	Level-1-235C-UNLIM/ Level-3-260C-168HRS	-40 to 85	
PTH12010YAZ	Active	Production	Surface Mount Module (EUJ) | 10	25 | TIW TRAY	Exempt	SNAGCU	Level-3-260C-168 HR	-40 to 85	
PTH12010YAZ.B	Active	Production	Surface Mount Module (EUJ) | 10	25 | TIW TRAY	Exempt	SNAGCU	Level-3-260C-168 HR	-40 to 85	

(1) **Status:** For more details on status, see our product life cycle.

(2) **Material type:** When designated, preproduction parts are prototypes/experimental devices, and are not yet approved or released for full production. Testing and final process, including without limitation quality assurance, reliability performance testing, and/or process qualification, may not yet be complete, and this item is subject to further changes or possible discontinuation. If available for ordering, purchases will be subject to an additional waiver at checkout, and are intended for early internal evaluation purposes only. These items are sold without warranties of any kind.

(3) **RoHS values:** Yes, No, RoHS Exempt. See the TI RoHS Statement for additional information and value definition.

(4) **Lead finish/Ball material:** Parts may have multiple material finish options. Finish options are separated by a vertical ruled line. Lead finish/Ball material values may wrap to two lines if the finish value exceeds the maximum column width.

(5) **MSL rating/Peak reflow:** The moisture sensitivity level ratings and peak solder (reflow) temperatures. In the event that a part has multiple moisture sensitivity ratings, only the lowest level per JEDEC standards is shown. Refer to the shipping label for the actual reflow temperature that will be used to mount the part to the printed circuit board.

(6) **Part marking:** There may be an additional marking, which relates to the logo, the lot trace code information, or the environmental category of the part.

Multiple part markings will be inside parentheses. Only one part marking contained in parentheses and separated by a "~" will appear on a part. If a line is indented then it is a continuation of the previous line and the two combined represent the entire part marking for that device.

Important Information and Disclaimer: The information provided on this page represents TI's knowledge and belief as of the date that it is provided. TI bases its knowledge and belief on information provided by third parties, and makes no representation or warranty as to the accuracy of such information. Efforts are underway to better integrate information from third parties. TI has taken and continues to take reasonable steps to provide representative and accurate information but may not have conducted destructive testing or chemical analysis on incoming materials and chemicals. TI and TI suppliers consider certain information to be proprietary, and thus CAS numbers and other limited information may not be available for release.

In no event shall TI's liability arising out of such information exceed the total purchase price of the TI part(s) at issue in this document sold by TI to Customer on an annual basis.

EUJ (R–PDSS–B10)

DOUBLE SIDED MODULE

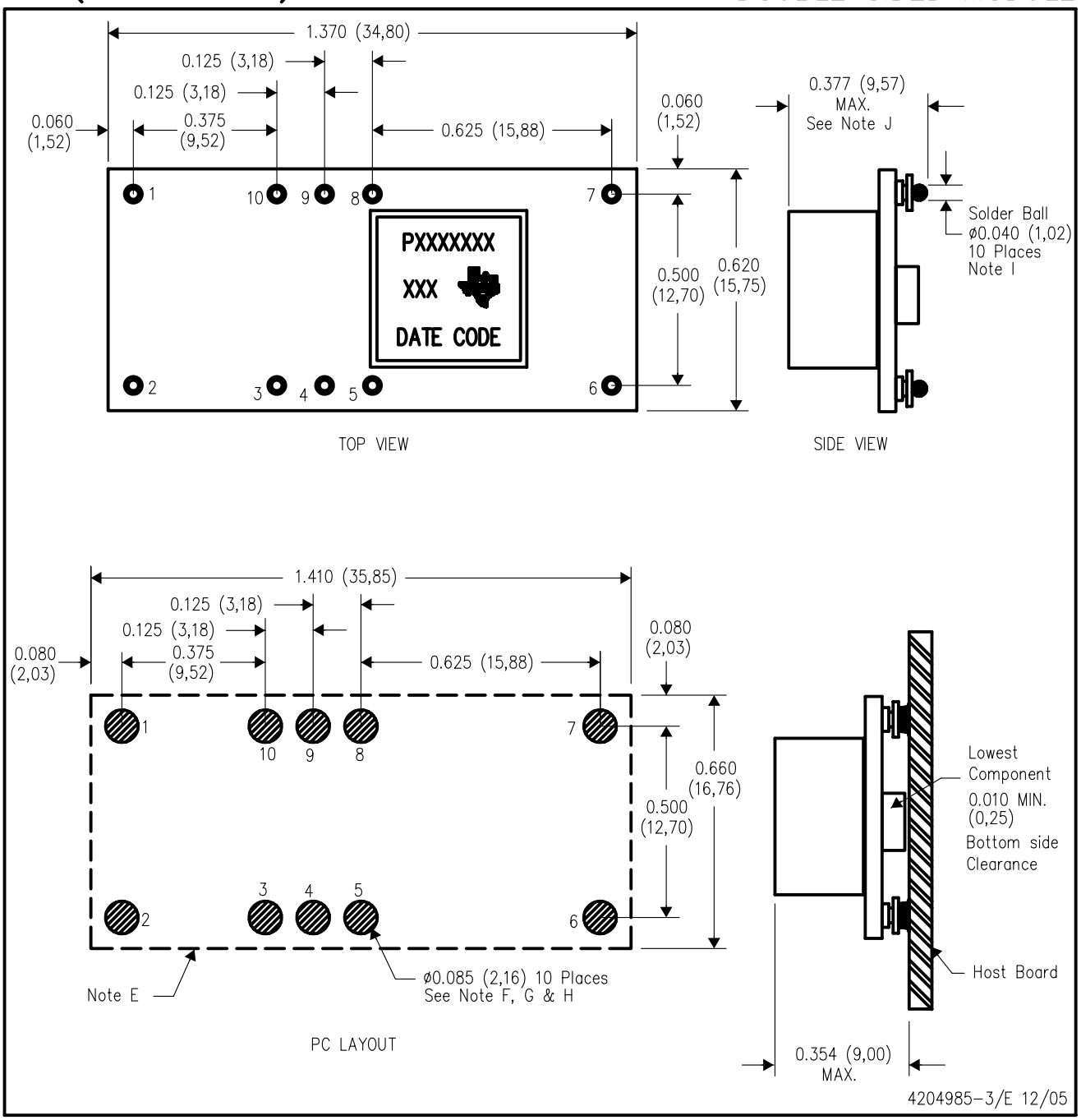

NOTES:
A. All linear dimensions are in inches (mm).
B. This drawing is subject to change without notice.
C. 2 place decimals are ±0.030 (±0,76mm).
D. 3 place decimals are ±0.010 (±0,25mm).
E. Recommended keep out area for user components.
F. Power pin connection should utilize two or more vias to the interior power plane of 0.025 (0,63) I.D. per input, ground and output pin (or the electrical equivalent).
G. Paste screen opening: 0.080 (2,03) to 0.085 (2,16). Paste screen thickness: 0.006 (0,15).
H. Pad type: Solder mask defined.
I. All pins: Material – Copper Alloy
Finish – Tin (100%) over Nickel plate
Solder Ball – See product data sheet.
J. Dimension prior to reflow solder.

EUH (R–PDSS–T10) DOUBLE SIDED MODULE

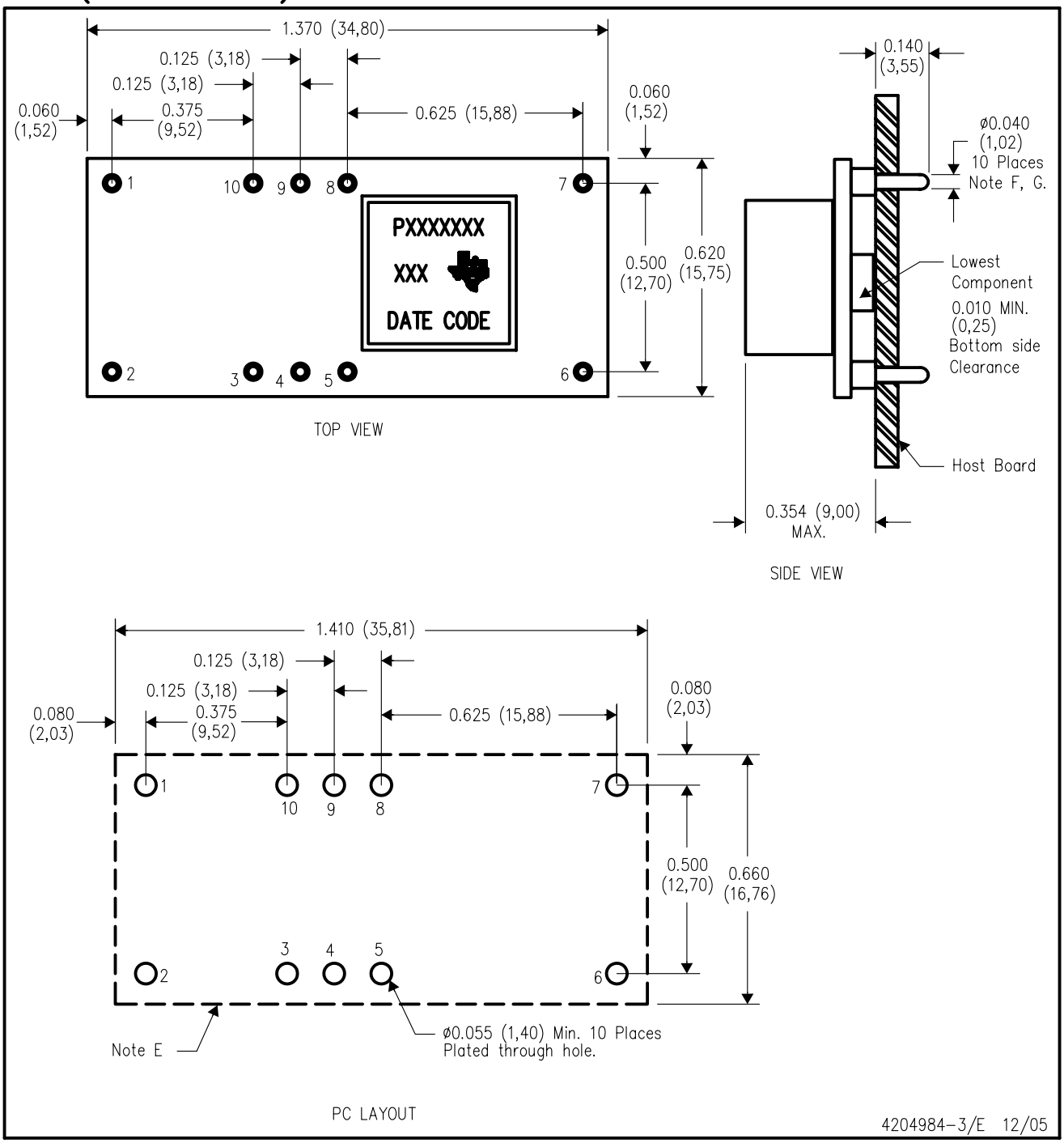

NOTES:
A. All linear dimensions are in inches (mm).
B. This drawing is subject to change without notice.
C. 2 place decimals are ±0.030 (±0,76mm).
D. 3 place decimals are ±0.010 (±0,25mm).
E. Recommended keep out area for user components.
F. Pins are 0.040" (1,02) diameter with 0.070" (1,78) diameter standoff shoulder.
G. All pins: Material – Copper Alloy
Finish – Tin (100%) over Nickel plate

IMPORTANT NOTICE AND DISCLAIMER

TI PROVIDES TECHNICAL AND RELIABILITY DATA (INCLUDING DATASHEETS), DESIGN RESOURCES (INCLUDING REFERENCE DESIGNS), APPLICATION OR OTHER DESIGN ADVICE, WEB TOOLS, SAFETY INFORMATION, AND OTHER RESOURCES “AS IS” AND WITH ALL FAULTS, AND DISCLAIMS ALL WARRANTIES, EXPRESS AND IMPLIED, INCLUDING WITHOUT LIMITATION ANY IMPLIED WARRANTIES OF MERCHANTABILITY, FITNESS FOR A PARTICULAR PURPOSE OR NON-INFRINGEMENT OF THIRD PARTY INTELLECTUAL PROPERTY RIGHTS.

These resources are intended for skilled developers designing with TI products. You are solely responsible for (1) selecting the appropriate TI products for your application, (2) designing, validating and testing your application, and (3) ensuring your application meets applicable standards, and any other safety, security, regulatory or other requirements.

These resources are subject to change without notice. TI grants you permission to use these resources only for development of an application that uses the TI products described in the resource. Other reproduction and display of these resources is prohibited. No license is granted to any other TI intellectual property right or to any third party intellectual property right. TI disclaims responsibility for, and you fully indemnify TI and its representatives against any claims, damages, costs, losses, and liabilities arising out of your use of these resources.

TI’s products are provided subject to TI’s Terms of Sale, TI’s General Quality Guidelines, or other applicable terms available either on ti.com or provided in conjunction with such TI products. TI’s provision of these resources does not expand or otherwise alter TI’s applicable warranties or warranty disclaimers for TI products. Unless TI explicitly designates a product as custom or customer-specified, TI products are standard, catalog, general purpose devices.

TI objects to and rejects any additional or different terms you may propose.

Copyright © 2026, Texas Instruments Incorporated

Last updated 10/2025