18-A, 5-V INPUT NONISOLATED WIDE-OUTPUT ADJUST SIP MODULE

FEATURES

- **Up to 18-A Output Current**
- **5-V Input Bus**
- **Wide-Output Voltage Adjust (0.8 V to 3.6 V)**
- **Efficiencies up to 96%**
- **On/Off Inhibit**
- **Output Voltage Sense**
- **Prebias Start-Up**
- **Undervoltage Lockout**
- **Auto-Track™ Sequencing**
- **Output Overcurrent Protection (Nonlatching, Auto-Reset)**
- **Overtemperature Protection**
- **Operating Temperature: –40°C to 85°C**
- **Safety Agency Approvals: UL/cUL 60950, EN60950 VDE**
- **POLA™ Compatible**

APPLICATIONS

- **Multivoltage Digital Systems**
- **High-Density Logic Circuits**
- **High-End Computers and Servers**
- **5-V Intermediate Bus Architectures**

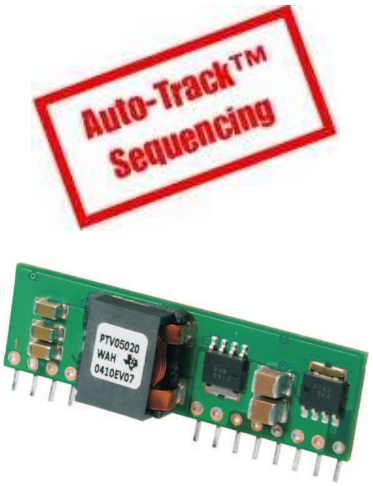

DESCRIPTION

The PTV05020W is a ready-to-use nonisolated power module, and part of a new class of complete dc/dc switching regulators from Texas Instruments. These regulators combine high performance with double-sided, surface-mount construction, to give designers the flexibility to power the most complex multiprocessor digital systems using off-the-shelf catalog parts.

The PTV05020W series is produced in a 12-pin, single in-line pin (SIP) package. The SIP footprint minimizes board space, and offers an alternate package option for space conscious applications. Operating from a 5-V input bus, the series provides step-down conversion to a wide range of output voltages, at up to 18 A of output current. The output voltage can be set to any value over the range, 0.8 V to 3.6 V. The output voltage is set using a single external resistor.

This series includes Auto-Track™. Auto-Track™ simplifies the task of supply-voltage sequencing in a power system by enabling the output voltage of multiple modules to accurately track each other, or any external voltage, during power up and power down.

Other operating features include an on/off inhibit, and the ability to start up into an existing output voltage or prebias. For improved load regulation, an output voltage sense is provided. A nonlatching overcurrent trip and overtemperature shutdown protects against load faults.

Target applications include complex multivoltage, multiprocessor systems that incorporate the industry's high-speed DSPs, microprocessors, and bus drivers.

Please be aware that an important notice concerning availability, standard warranty, and use in critical applications of Texas Instruments semiconductor products and disclaimers thereto appears at the end of this data sheet.

POLA, Auto-Track, TMS320 are trademarks of Texas Instruments.

PRODUCTION DATA information is current as of publication date. Products conform to specifications per the terms of the Texas Instruments standard warranty. Production processing does not necessarily include testing of all parameters.

Copyright © 2005–2007, Texas Instruments Incorporated

These devices have limited built-in ESD protection. The leads should be shorted together or the device placed in conductive foam during storage or handling to prevent electrostatic damage to the MOS gates.

STANDARD APPLICATION

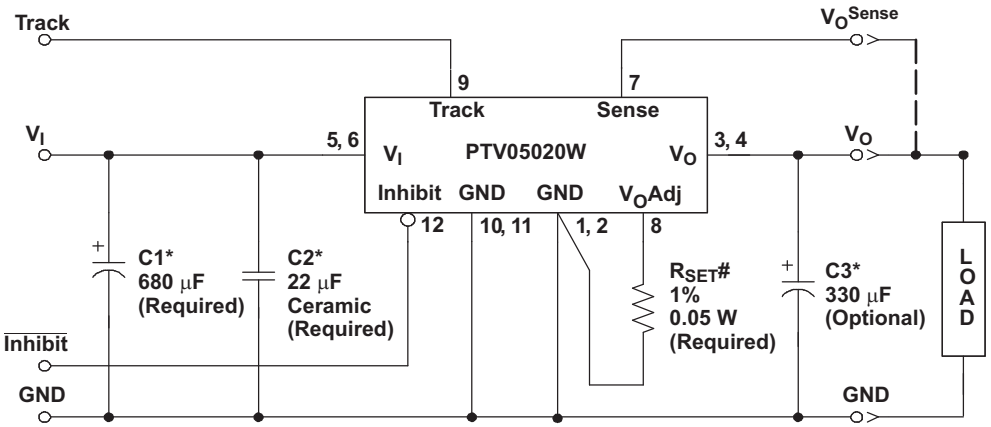

* **See the Application Information section for capacitor recommendations.**
# R_{SET} is required to adjust the output voltage higher than its lowest value. See the Application Information section for values.

ORDERING INFORMATION

PTV05020 (Basic Model)				
Output Voltage Range	**Part Number**	**DESCRIPTION**	**Pb - free and RoHS**	**Mechanical Package (1)**
0.8 V – 3.6 V (Adjustable)	PTV05020WAH	Vertical T/H	Yes (2)	EVC

(1) See the applicable package drawing for dimensions and PC board layout.
(2) Lead (Pb) - free specifies Sn/Ag pin solder material.

ABSOLUTE MAXIMUM RATINGS

over operating free-air temperature range unless otherwise noted(1)

			UNIT
$V_{(Track)}$	Track input voltage		–0.3 V to V_I +0.3 V
T_A	Operating temperature range	Over V_I range	–40°C to 85°C
	Lead temperature	5 seconds	260°C (2)
T_{stg}	Storage temperature		–55°C to 125°C
$V_{(INH)}$	Inhibit input voltage		–0.3 V to 7 V

(1) Stresses beyond those listed under absolute maximum ratings may cause permanent damage to the device. These are stress ratings only, and functional operation of the device at these or any other conditions beyond those indicated under recommended operating conditions is not implied. Exposure to absolute-maximum-rated conditions for extended periods may affect device reliability.
(2) This product is not compatible with surface-mount reflow solder processes.

PACKAGE SPECIFICATIONS

PTV05020W (Suffix AH)		
Weight		5.5 grams
Flammability	Meets UL 94 V-O	
Mechanical shock	Per Mil-STD-883D, Method 2002.3, 1 ms, 1/2 sine, mounted	500 G (1)
Mechanical vibration	Mil-STD-883D, Method 2007.2, 20 Hz - 2000 Hz	10 G (1)

(1) Qualification limit.

Copyright © 2005–2007, Texas Instruments Incorporated

ELECTRICAL CHARACTERISTICS

operating at 25°C free-air temperature, V_I = 5 V, V_O = 3.3 V, C1 = 680 µF, C2 = 22 µF, C3 = 0 µF, and I_O = I_O max (unless otherwise noted)

PARAMETER		TEST CONDITIONS		MIN	TYP	MAX	UNIT
I_O	Output current	Natural convection airflow		0		18 (1)	A
V_I	Input voltage range	Over I_O load range		4.5		5.5	V
V_O	Set-point voltage tolerance					2% (2)	
	Temperature variation	–40°C < T_A < 85°C			0.5%		
	Line regulation	Over V_I range			5		mV
	Load regulation	Over I_O range			5		mV
	Total output variation	Includes set-point, line, load, –40°C ≤ T_A ≤ 85°C				3 (2)	%V_o
	Adjust range	Over V_I range		0.8		3.6	V
η	Efficiency	I_O = I_O max	R_{SET} = 698 Ω, V_O = 3.3 V		94%		
			R_{SET} = 2.21 kΩ, V_O = 2.5 V		93%		
			R_{SET} = 5.49 kΩ, V_O = 1.8 V		90%		
			R_{SET} = 8.87 kΩ, V_O = 1.5 V		89%		
			R_{SET} = 17.4 kΩ, V_O = 1.2 V		87%		
			R_{SET} = 36.5 kΩ, V_O = 1 V		85%		
	Output voltage ripple (pk-pk)	20-MHz bandwidth			20		mV_{PP}
I_O (trip)	Overcurrent threshold	Reset, followed by auto-recovery			35		A
	Transient response	1-A/s load step, 50 to 100% I_O max, C3 = 330 µF					
		Recovery time			70		µs
		V_o over/undershoot			120		mV
	Track control (pin 9)	I_{IL} Input low current	Pin to GND			–0.13	mA
		Control slew-rate limit	C3 ≤ C3 (max)			1	V/ms
UVLO	Undervoltage lockout	V_I increasing			4.3	4.5	V
		V_I decreasing		3.1	3.7		
	Inhibit control (pin 12)	V_{IH} Input high voltage	Referenced to GND	V_I – 0.5		Open (3)	V
		V_{IL} Input low voltage		–0.2		0.6	
		I_{IL} Input low current	Pin to GND		0.24		mA
I_I (stby)	Input standby current	Inhibit (pin 12) to GND, Track (pin 9) open			10		mA
f_S	Switching frequency	Over V_I and I_O ranges		250	300	340	kHz
	External input capacitance	Nonceramic (C1)		680 (4)			µF
		Ceramic (C2)		22 (4)			
	External output capacitance (C3)	Capacitance value	Nonceramic	0	330 (5)	11,000 (6)	µF
			Ceramic	0		300	
		Equivalent series resistance (nonceramic)		4 (7)			mΩ
MTBF	Reliability	Per Telcordia SR-332, 50% stress, T_A = 40°C, ground benign			5		10^6 Hrs

(1) See thermal derating curves for safe operating area (SOA), or consult factory for appropriate derating.
(2) The set-point voltage tolerance is affected by the tolerance and stability of R_{SET}. The stated limit is unconditionally met if R_{SET} has a tolerance of 1%, with 100 ppm/°C or better temperature stability.
(3) This control pin is pulled up to the input voltage, V_I. If this input is left open circuit, the module will operate when input power is applied. A small low-leakage (< 100 nA) MOSFET is recommended for control. For further information, consult the related application note.
(4) A 22-µF high-frequency ceramic capacitor and 680-µF electrolytic input capacitor are required for proper operation. The electrolytic capacitor must be rated for 750 mArms minimum ripple current. Consult the Application Information for further guidance on capacitor selection.
(5) An external output capacitor is not required for basic operation. Adding 330 µF of distributed capacitance at the load improves the transient response.
(6) This is the calculated maximum. The minimum ESR limitation often results in a lower value. When controlling the Track pin using a voltage supervisor, C_O(max) is reduced to 6600 µF. Consult the Application Information for further guidance.
(7) This is the typical ESR for all the electrolytic (nonceramic) output capacitance. Use 7 mΩ as the minimum when using max-ESR values to calculate.

Copyright © 2005–2007, Texas Instruments Incorporated

TYPICAL CHARACTERISTICS; V_I = 5 V

EFFICIENCY vs OUTPUT CURRENT

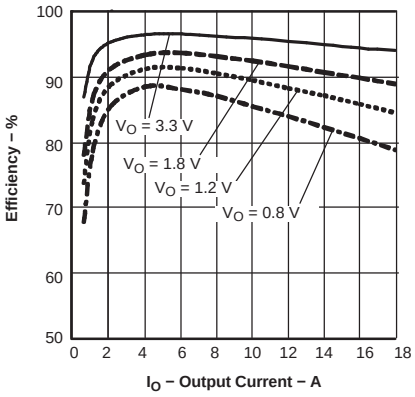

Figure 1.

OUTPUT VOLTAGE RIPPLE vs OUTPUT CURRENT

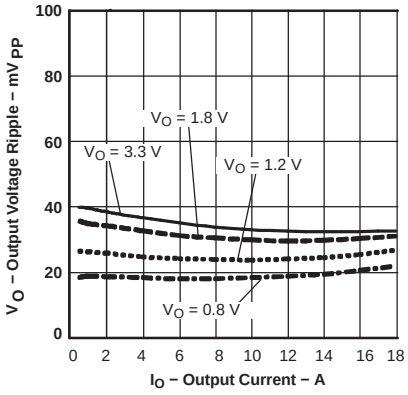

Figure 2.

POWER DISSIPATION vs OUTPUT CURRENT

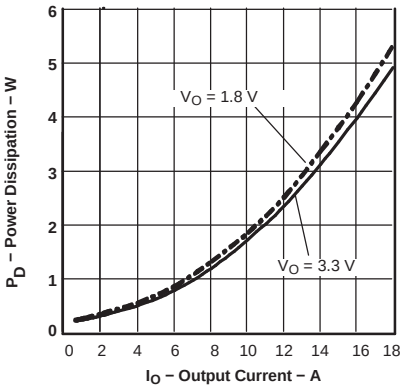

Figure 3.

TEMPERATURE DERATING vs OUTPUT CURRENT

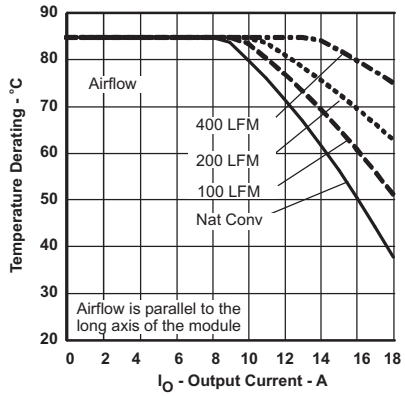

Figure 4.

Copyright © 2005–2007, Texas Instruments Incorporated

DEVICE INFORMATION

TERMINAL FUNCTIONS

TERMINAL		DESCRIPTION
NAME	NO.	
V_I	5, 6	The positive input voltage power node to the module, which is referenced to common GND.
V_O	3, 4	The regulated positive power output with respect to the GND node.
GND	1, 2, 10, 11	This is the common ground connection for the V_I and V_O power connections. It is also the 0-Vdc reference for the control inputs.
Inhibit	12	The Inhibit pin is an open-collector/drain, active-low input that is referenced to GND. Applying a low-level ground signal to this input disables the module's output and turns off the output voltage. When the Inhibit control is active, the input current drawn by the regulator is significantly reduced. If the inhibit feature is not used, the control pin should be left open-circuit. The module then produces an output voltage whenever a valid input source is applied.
V_o Adjust	8	A 1% resistor must be connected directly between this pin and GND (pin 1 or 2) to set the output voltage of the module higher than its lowest value. The temperature stability of the resistor should be 100 ppm/°C (or better). The set-point range is 0.8 V to 3.6 V. The resistor value can be calculated using a formula. If this input is left open-circuit, the output voltage defaults to its lowest value. For further information, consult the related application note. *The specification table gives the standard resistor values for a number of common output voltages.*
V_o Sense	7	The sense input allows the regulation circuit to compensate for voltage drop between the module and the load. For optimal voltage accuracy V_o Sense should be connected to V_O. It can also be left disconnected.
Track	9	This is an analog control input that enables the output voltage to follow an external voltage. This pin becomes active typically 20 ms after the input voltage has been applied, and allows direct control of the output voltage from 0 V up to the nominal set-point voltage. Within this range, the output follows the voltage at the Track pin on a volt-for-volt basis. When the control voltage is raised above this range, the module regulates at its set-point voltage. The feature allows the output voltage to rise simultaneously with other modules powered from the same input bus. If unused, this input should be connected to V_I. *NOTE: Due to the undervoltage lockout feature, the output of the module cannot follow its own input voltage during power up. Consult the related Application Information for further guidance.*

Front View of Module

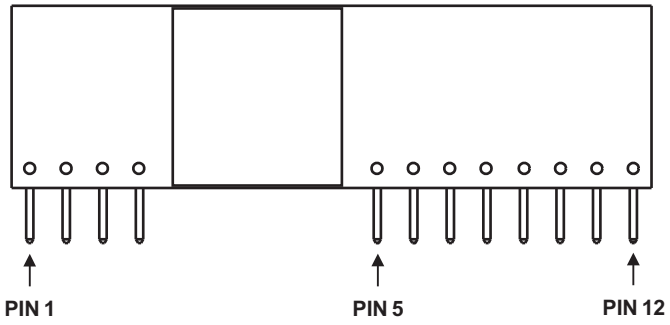

Figure 5. Pin Terminal Locations

Copyright © 2005–2007, Texas Instruments Incorporated

APPLICATION INFORMATION

Capacitor Recommendations for the PTV05020W Power Module

Input Capacitors

The required input capacitors are a 22-µF ceramic and a minimum of 680-µF electrolytic type. For V_O > 1 V and I_O > 11 A , the 680-µF capacitance must be rated for 750 mArms ripple current capability. For other conditions, V_O > 1 V at I_O < 11 A load, the ripple current rating must be at least 500 mArms. Where applicable, Table 1 gives the maximum output voltage and current limits for a capacitor's rms ripple current rating.

The above ripple current requirements are *conditional* that the 22-µF ceramic capacitor is present. The 22-µF X5R/X7R ceramic capacitor is necessary to reduce both the magnitude of ripple current through the electroytic capacitor and the amount of ripple current reflected back to the input source. Ceramic capacitors should be located within 0.5 inch. (1,3 cm) of the module's input pins. Additional ceramic capacitors can be added to reduce the RMS ripple current requirement for the electrolytic capacitor.

Ripple current (rms) rating, less than 100-mΩ equivalent series resistance (ESR), and temperature are the major considerations when selecting input capacitors. Unlike polymer-tantalum capacitors, regular tantalum capacitors have a recommended minimum voltage rating of 2 × (max. dc voltage + ac ripple). This is standard practice to ensure reliability. Only a few tantalum capacitors were found to have sufficient voltage rating to meet this requirement. At temperatures below 0°C, the ESR of aluminum electrolytic capacitors increases. For these applications, Os-Con, polymer-tantalum, and polymer-aluminum types should be considered.

Output Capacitor (Optional)

For applications with load transients (sudden changes in load current), regulator response benefits from external output capacitance. The recommended output capacitance of 330 µF allows the module to meet its transient response specification. For most applications, a high-quality computer-grade aluminum electrolytic capacitor is adequate. These capacitors provide decoupling over the frequency range, 2 kHz to 150 kHz, and are suitable when ambient temperatures are above 0°C. For operation below 0°C, tantalum, ceramic, or Os-Con type capacitors are recommended. When using one or more nonceramic capacitors, the calculated equivalent ESR should be no lower than 4 mΩ (7 mΩ using the manufacturer's maximum ESR for a single capacitor). A list of preferred low-ESR type capacitors are identified in Table 1.

Ceramic Capacitors

Above 150 kHz, the performance of aluminum electrolytic capacitors is less effective. Multilayer ceramic capacitors have low ESR and a resonant frequency higher than the bandwidth of the regulator. They can be used to reduce the reflected ripple current at the input as well as improve the transient response of the output. When used on the output, their combined ESR is not critical as long as the total value of ceramic capacitance does not exceed approximately 300 µF. Also, to prevent the formation of local resonances, do not place more than five identical ceramic capacitors in parallel with values of 10 µF or greater.

Tantalum Capacitors

Tantalum-type capacitors can only be used on the output bus, and are recommended for applications where the ambient operating temperature can be less than 0°C. The AVX TPS, Sprague 593D/594/595 and Kemet T495/T510 capacitor series are suggested over many other tantalum types due to their higher rated surge, power dissipation, and ripple current capability. As a caution, many general-purpose tantalum capacitors have considerably higher ESR, reduced power dissipation, and lower ripple current capability. These capacitors are also less reliable as they have reduced power dissipation and surge current ratings. Tantalum capacitors that have no stated ESR or surge current rating are not recommended for power applications.

When specifying Os-con and polymer tantalum capacitors for the output, the minimum ESR limit is encountered before the maximum capacitance value is reached.

Capacitor Table

Table 1 identifies the characteristics of capacitors from a number of vendors with acceptable ESR and ripple current (rms) ratings. The recommended number of capacitors required at both the input and output buses is identified for each capacitor type.

Copyright © 2005–2007, Texas Instruments Incorporated

Note: *This is not an extensive capacitor list. Capacitors from other vendors are available with comparable specifications. Those listed are for guidance. The RMS ripple current rating and ESR (at 100 kHz) are critical parameters necessary to ensure both optimum regulator performance and long capacitor life.*

Designing for Fast Load Transients

The transient response of the dc/dc converter has been characterized using a load transient with a di/dt of 1 A/µs. The typical voltage deviation for this load transient is given in the data sheet specification table using the optional value of output capacitance. As the di/dt of a transient is increased, the response of a converter regulation circuit ultimately depends on its output capacitor decoupling network. This is an inherent limitation with any dc/dc converter once the speed of the transient exceeds its bandwidth capability. If the target application specifies a higher di/dt or lower voltage deviation, the requirement can only be met with additional output capacitor decoupling. In these cases special attention must be paid to the type, value and ESR of the capacitors selected.

If the transient performance requirements exceed that specified in the data sheet, or the total amount of load capacitance is above 3000 µF, the selection of output capacitors becomes more important.

Table 1. Input/Output Capacitors (1)

Capacitor Vendor, Type/Series (Style)	Capacitor Characteristics					Quantity		Vendor Part Number
	Working Voltage (V)	Value (µF)	Max ESR at 100 kHz (Ω)	Max Ripple Current at 85°C (Irms) (mA)	Physical Size (mm)	Input Bus	Optional Output Bus	
Panasonic, Aluminum	10	680	0.090	775	10 × 12.5	1	1	EEUFC1E681
FC (Radial	10	680	0.090	755	10 × 12.2	1	1	EEUFC1A681
FK (SMD)	16	680	0.080	850	10 × 10.2	1	1	EEVFK1C681P
United Chemi-Con								
PSA,Poly- Aluminum (Radial)	6.3	680	0.007	5860	10 × 11.5	1	≤ 1	PSA6.3VB680MJ11
LXZ, Aluminum (Radial)	10	680	0.09	760	10 × 12.5	1	1	LXZ10VB681M10X12LL
PS, Poly-Aluminum (Radial)	6.3	680	0.010	5500	10 × 12.5	1	≤ 1	6PS680MJ12
PXA, Poly-Aluminum (SMD)	6.3	680	0.010	5500	10 × 12.2	1	≤ 1	PXA6.3VC681MJ12TP
Nichicon, Aluminum	10	680	0.090	1060	12.5 × 15	1	1	UPM1A681MHH6
HD (Radial)	10	680	0.053	1030	10 × 12.5	1	1	UHD1A681MHR
Panasonic, Poly-Aluminum								
S/SE (SMD)Poly-Tanalum	6.3	180	0.005	4000	7.3 × 154.3 × 4.2	N/R (2)	≤ 1	EEFSE0J181R
Sanyo								
TP, Poscap	10	330	0.025	3000	7.3 L × 4.3 W	2 (3)	≤ 4	10TPE330M
SP, Os-Con (Radial)	6.3	820	0.012	>5400	10 × 13	1	≤ 1	6SEQP820M
SVP, Os-Con (SMD)	6.3	820	0.012	5400	11 × 12.7	1	≤ 1	6SVP820M
AVX, Tantalum, Series III	10	330	0.060	>1723	7.3L × 5.7 W × 4.1 H	N/R	≤ 5	TPSV337M010R0040
TPS (SMD)	10	330	0.040	>2200		N/R	≤ 5	TPSE337M010R0040
Kemet (SMD)								
T520, Poly-Tant	10	330	0.040	1800		2	≤ 5	T520X337M010AS
T530, Poly-Tant/Organic	10	330	0.010	>3800	43 W × 7.3 L × 4 H	2	≤ 1	T530X337M010ASE010
	6.3	470	0.010	4200		2	≤ 1	T530X477M006ASE010
Vishay-Sprague 94SVP,(Oscon)(SMD)	6.3	820	0.014	5040	11 ×12	1	≤ 2	94SVP827X06R3F12
595D, Tantalum (SMD)	10	680	0.090	1680	7.2 L × 6 W × 4.1 H	1	≤ 5	595D687X0010R2T

(1) **Capacitor Supplier Verification**
Please verify availability of capacitors identified in this table. Capacitor suppliers may recommend alternative part numbers because of limited availability or obsolete products. In some instances, the capacitor product life cycle may be in decline and have short-term consideration for obsolescence.
RoHS, Lead-free and Material Details
Please consult capacitor suppliers regarding material composition, RoHS status, lead-free status, and manufacturing process requirements. Component designators or part number deviations can occur when material composition or soldering requirements are updated.
(2) N/R – Not recommended. The voltage rating does not meet the minimum operating limits.
(3) Total capacitance of 660 µF is acceptable based on the combined ripple current rating.

Copyright © 2005–2007, Texas Instruments Incorporated

Table 1. Input/Output Capacitors (continued)

Capacitor Vendor, Type/Series (Style)	Capacitor Characteristics					Quantity		Vendor Part Number
	Working Voltage (V)	Value (µF)	Max ESR at 100 kHz (Ω)	Max Ripple Current at 85°C (Irms) (mA)	Physical Size (mm)	Input Bus	Optional Output Bus	
94SA, Os-Con (Radial)	6.3	680	0.013	4840	10 × 10.5	1	≤ 2	94SA687X06R3FBP
Kemet, Ceramic X5R (SMD)	16	10	0.002	—	3225	≥2 (4)	≤ 5	C1210C106M4PAC
	6.3	22	0.002		3225	≥1 (4)	≤ 5	C1210C226K9PAC
	6.3	47	0.002		3225	≥1 (4)	≤ 5	C1210C476K9PAC
Murata, Ceramic X5R (SMD)	6.3	100	0.002	—	3225	≥1 (4)	≤ 3	GRM32ER60J107M
	6.3	47				≥1 (4)	≤ 5	GRM32ER60J476M
	16	22				≥1 (4)	≤ 5	GRM32ER61C226K
	16	10				≥2 (4)	≤ 5	GRM32DR61C106K
TDK, Ceramic X5R (SMD)	6.3	100	0.002	—	3225	≥1 (4)	≤ 3	C3225X5R0J107MT
	6.3	47				≥1 (4)	≤ 5	C3225X5R0J476MT
	16	22				≥1 (4)	≤ 5	C3225X5R1C226MT
	16	10				≥2 (4)	≤ 5	C3225X5R1C106MT

(4) Ceramic capacitors are required to complement electrolytic types at the input and to reduce high-frequency ripple current.

Adjusting the Output Voltage

The V_O *Adjust* control (pin 8) sets the output voltage of the PTV05020W product to a value over the range, 0.8 V to 3.6 V. The adjustment method requires the addition of a single external resistor, R_{SET}, that must be connected directly between the V_O Adjust and the regulator's output GND (pin 1 or 2). Without an adjust resistor, the output voltage is set to its lowest value. Table 2 gives the preferred value of the external resistor for a number of standard voltages, along with the actual output voltage that this resistance value provides. Figure 6 shows the placement of the required resistor.

Table 2. Nearest Standard Values of R_{SET} for Common Output Voltages

V_O (Required)	R_{SET} (Standard Value)	V_O (Actual)
3.3 V	698 Ω	3.309 V
2.5 V	2.21 kΩ	2.502 V
2 V	4.12 kΩ	2.010 V
1.8 V	5.49 kΩ	1.803 V
1.5 V	8.87 kΩ	1.504 V
1.2 V	17.4 kΩ	1.202 V
1 V	36.5 kΩ	1.005 V
0.8 V	Open	0.800 V

For other output voltages, the value of the required resistor can either be calculated or simply selected from the range of values given in Table 3. Equation 1 may be used for calculating the adjust resistor value.

$$R_{set} = 10\ k\Omega \times \frac{0.8\ V}{V_{out} - 0.8\ V} - 2.49\ k\Omega \quad (1)$$

Copyright © 2005–2007, Texas Instruments Incorporated

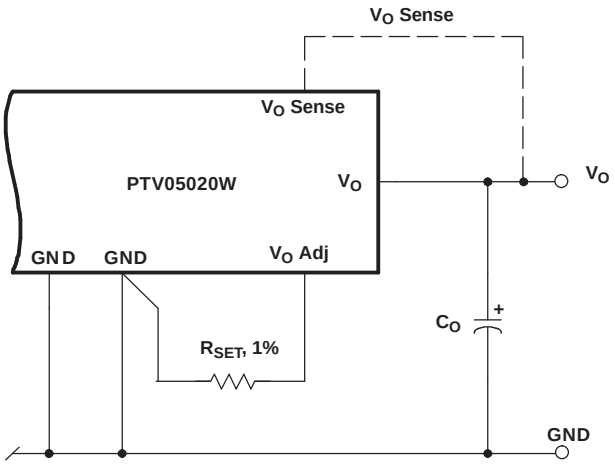

Figure 6. V_O Adjust Resistor Placement

Table 3. Calculated Values of R_{SET} for Other Output Voltages

V_O	R_{SET}	V_O	R_{SET}	V_O	R_{SET}
0.800	Open	1.450	9.82 kΩ	2.550	2.08 kΩ
0.825	318 kΩ	1.500	8.94 kΩ	2.600	1.95 kΩ
0.850	158 kΩ	1.550	8.18 kΩ	2.650	1.83 kΩ
0.875	104 kΩ	1.600	7.51 kΩ	2.700	1.72 kΩ
0.900	77.5 kΩ	1.650	6.92 kΩ	2.750	1.61 kΩ
0.925	61.5 kΩ	1.700	6.40 kΩ	2.800	1.51 kΩ
0.950	50.8 kΩ	1.750	5.93 kΩ	2.850	1.41 kΩ
0.975	43.2 kΩ	1.800	5.51 kΩ	2.900	1.32 kΩ
1.000	37.5 kΩ	1.850	5.13 kΩ	2.950	1.23 kΩ
1.025	33.1 kΩ	1.900	4.78 kΩ	3.000	1.15 kΩ
1.050	29.5 kΩ	1.950	4.47 kΩ	3.050	1.07 kΩ
1.075	26.6 kΩ	2.000	4.18 kΩ	3.100	998 Ω
1.100	24.2 kΩ	2.050	3.91 kΩ	3.150	914 Ω
1.125	22.1 kΩ	2.100	3.66 kΩ	3.200	843 Ω
1.150	20.4 kΩ	2.150	3.44 kΩ	3.250	775 Ω
1.175	18.8 kΩ	2.200	3.22 kΩ	3.300	710 Ω
1.200	17.5 kΩ	2.250	3.03 kΩ	3.350	647 Ω
1.225	16.3 kΩ	2.300	2.84 kΩ	3.400	587 Ω
1.250	15.3 kΩ	2.350	2.67 kΩ	3.450	529 Ω
1.300	13.5 kΩ	2.400	2.51 kΩ	3.500	473 Ω
1.350	12.1 kΩ	2.450	2.36 kΩ	3.550	419 Ω
1.400	10.8 kΩ	2.500	2.22 kΩ	3.600	367 Ω

Copyright © 2005–2007, Texas Instruments Incorporated

Features of the PTH/PTV Family of Non-Isolated, Wide-Output Adjust Power Modules

POLA™ Compatibility

The PTH/PTV family of non-isolated, wide-output adjustable power modules from Texas Instruments are optimized for applications that require a flexible, high-performance module that is small in size. Each of these products are POLA™ compatible. POLA-compatible products are produced by a number of manufacturers, and offer customers advanced, non-isolated modules with the same footprint and form factor. POLA parts are also ensured to be interoperable, thereby providing customers with true second-source availability.

Soft-Start Power Up

The Auto-Track feature allows the power up of multiple PTH/PTV modules to be directly controlled from the Track pin. However, in a stand-alone configuration, or when the Auto-Track feature is not being used, the *Track* pin should be directly connected to the input voltage, V_I (see Figure 7).

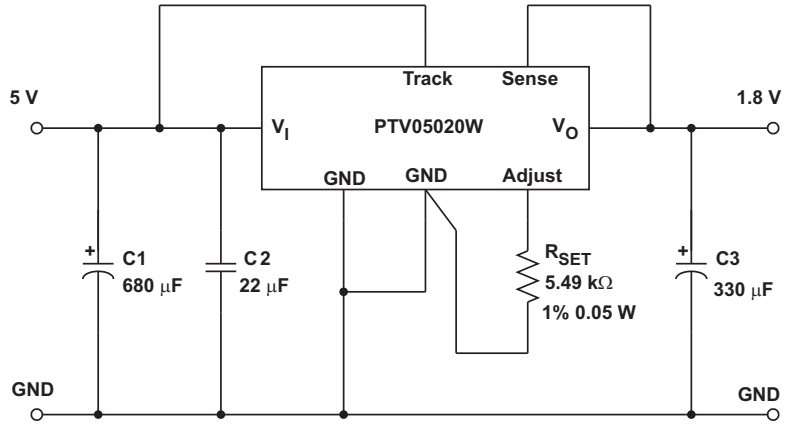

Figure 7. Power-Up Application Circuit

When the *Track* pin is connected to the input voltage, the Auto-Track function is permanently disengaged. This allows the module to power up entirely under the control of its internal soft-start circuitry. When power up is under soft-start control, the output voltage rises to the set-point at a quicker and more linear rate.

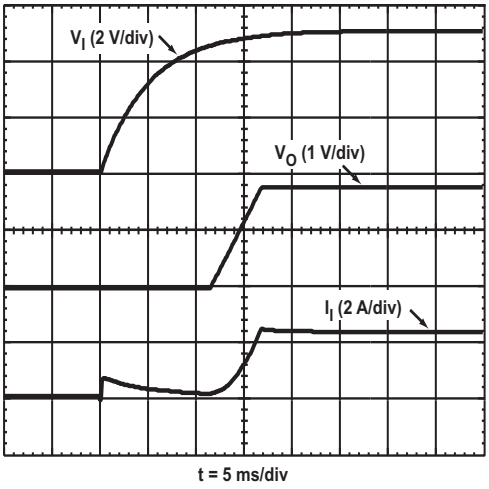

Figure 8. Power-Up Waveforms

Copyright © 2005–2007, Texas Instruments Incorporated

From the moment a valid input voltage is applied, the soft-start control introduces a short time delay (typically 8ms to 15ms) before allowing the output voltage to rise. The output then progressively rises to the module set-point voltage. Figure 8 shows the soft-start power-up characteristic of the PTV05020W, operating from a 5-V input bus and configured for a 3.3-V output. The waveforms were measured with a 10-A resistive load and the Auto-Track feature disabled. The initial rise in input current when the input voltage first starts to rise is the charge current drawn by the input capacitors. Power up is complete within 25 ms.

Overcurrent Protection (OCP)

For protection against load faults, the modules incorporate output overcurrent protection. Applying a load that exceeds the overcurrent threshold causes the regulated output to shut down. Following shutdown, a module periodically attempts to recover by initiating a soft-start power up. This is described as a *hiccup* mode of operation, whereby the module continues in the cycle of successive shutdown and power up until the load fault is removed. During this period, the average current flowing into the fault is significantly reduced. Once the fault is removed, the module automatically recovers and returns to normal operation.

Overtemperature Protection (OTP)

An onboard temperature sensor protects the module internal circuitry against excessively high temperatures. A rise in the internal temperature may be the result of a drop in airflow or a high ambient temperature. If the internal temperature exceeds the OTP threshold, the module Inhibit control is internally pulled low. This turns the output off. The output voltage drops as the external output capacitors are discharged by the load circuit. The recovery is automatic, and begins with a soft-start power up. It occurs when the sensed temperature decreases by about 10C below the trip point.

Note: *The overtemperature protection is a last resort mechanism to prevent thermal stress to the regulator. Operation at or close to the thermal shutdown temperature is not recommended and reduces the long-term reliability of the module. Always operate the regulator within the specified Safe Operating Area (SOA) limits for the worst-case conditions of ambient temperature and airflow.*

Output On/Off Inhibit

For applications requiring output voltage on/off control, the modules incorporate an output Inhibit control pin. The inhibit feature can be used wherever there is a requirement for the output voltage from the regulator to be turned off.

The power modules function normally when the *Inhibit* input is left open-circuit, providing a regulated output whenever a valid source voltage is connected to V_I with respect to GND.

Figure 9 shows the typical application of the inhibit function. Note the discrete transistor (Q1). The *Inhibit* input has its own internal pull up (see footnotes to electrical characteristics table). The input is not compatible with TTL logic devices. An open-collector (or open-drain) discrete transistor is recommended for control.

Copyright © 2005–2007, Texas Instruments Incorporated

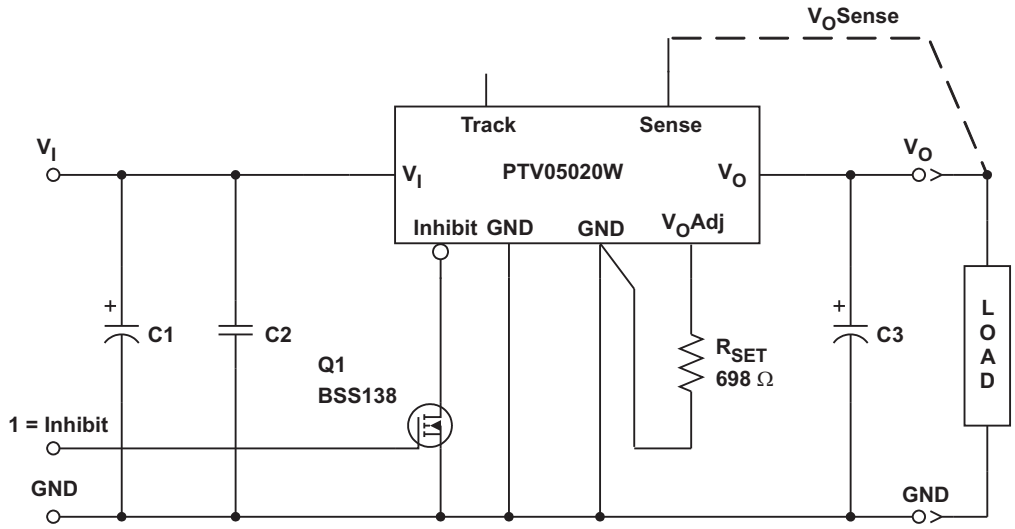

Figure 9. On/Off Inhibit Application Circuit

Turning Q1 on applies a low voltage to the Inhibit control and disables the output of the module. If Q1 is then turned off, the module executes a soft-start power-up sequence. A regulated output voltage is produced within25 ms. Figure 10 shows the typical rise in both the output voltage and input current, following the turnoff of Q1. The turnoff of Q1 corresponds to the rise in the waveform, Q1 V_{DS}. The waveforms were measured with a 10-A constant current load.

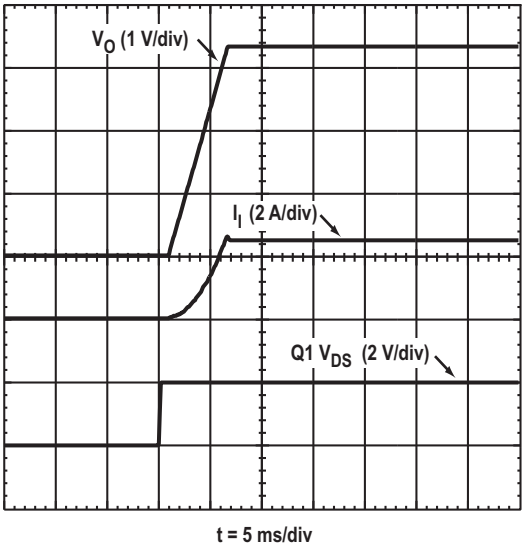

Figure 10. Power-Up from Inhbit Control

Auto-Track™ Function

The Auto-Track function is unique to the PTH/PTV family, and is available with all POLA products. Auto-Track was designed to simplify the amount of circuitry required to make the output voltage from each module power up and power down in sequence. The sequencing of two or more supply voltages during power up is a common requirement for complex mixed-signal applications that use dual-voltage VLSI ICs such as the TMS320™ DSP family, microprocessors, and ASICs.

Copyright © 2005–2007, Texas Instruments Incorporated

How Auto-Track™ Works

Auto-Track works by forcing the module output voltage to follow a voltage presented at the *Track* control pin (1). This control range is limited to between 0 V and the module set-point voltage. Once the track-pin voltage is raised above the set-point voltage, the module output remains at its set-point (2). As an example, if the *Track* pin of a 2.5-V regulator is at 1 V, the regulated output is 1 V. If the voltage at the *Track* pin rises to 3 V, the regulated output does not go higher than 2.5 V.

Under Auto-Track control, the regulated output from the module follows the voltage at its *Track* pin on a volt-for-volt basis. By connecting the *Track* pin of a number of these modules together, the output voltages follow a common signal during power up and power down. The control signal can be an externally generated master ramp waveform, or the output voltage from another power supply circuit (3). For convenience, the *Track* input incorporates an internal RC-charge circuit. This operates off the module input voltage to produce a suitable rising waveform at power up.

Typical Application

The basic implementation of Auto-Track allows for simultaneous voltage sequencing of a number of Auto-Track compliant modules. Connecting the *Track* inputs of two or more modules forces their track input to follow the same collective RC-ramp waveform, and allows their power-up sequence to be coordinated from a common track control signal. This can be an open-collector (or open drain) device, such as a power-up reset voltage supervisor IC. See U3 in Figure 11.

To coordinate a power-up sequence, the Track control must first be pulled to ground potential. This should be done at or before input power is applied to the modules. The ground signal should be maintained for at least 20 ms after input power has been applied. This brief period gives the modules time to complete their internal soft-start initialization (4), enabling them to produce an output voltage. A low-cost supply voltage supervisor IC, that includes a built-in time delay, is an ideal component for automatically controlling the track inputs at power up.

Figure 11 shows how the TPS3808G50 supply voltage supervisor IC (U3) can be used to coordinate the sequenced power-up of two 5-V input Auto-Track modules. The output of the TPS3808G50 supervisor becomes active above an input voltage of 0.8 V, enabling it to assert a ground signal to the common track control well before the input voltage has reached the module's undervoltage lockout threshold. The ground signal is maintained until approximately 27 ms after the input voltage has risen above U3's voltage threshold, which is 4.65 V. The 27-ms time period is controlled by the capacitor C3. The value of 4700 pF provides sufficient time delay for the modules to complete their internal soft-start initialization. The output voltage of each module remains at zero until the track control voltage is allowed to rise. When U3 removes the ground signal, the track control voltage automatically rises. This causes the output voltage of each module to rise simultaneously with the other modules, until each reaches its respective set-point voltage.

Figure 12 shows the output voltage waveforms from the circuit of Figure 11 after input voltage is applied to the circuit. The waveforms, V_O1 and V_O2 represent the output voltages from the two power modules, U1 (3.3 V) and U2 (1.8 V), respectively. V_{TRK}, V_O1, and V_O2 are shown rising together to produce the desired simultaneous power-up characteristic.

The same circuit also provides a power-down sequence. When the input voltage falls below U3's voltage threshold, the ground signal is reapplied to the common track control. This pulls the track inputs to zero volts, forcing the output of each module to follow, as shown in Figure 13. In order for a simultaneous power-down to occur, the track inputs must be pulled low before the input voltage has fallen below the modules' undervoltage lockout. This is an important constraint. Once the modules recognize that a valid input voltage is no longer present, their outputs can no longer follow the voltage applied at their track input. During a power-down sequence, the fall in the output voltage from the modules is limited by the maximum output capacitance and the Auto-Track slew rate. If the *Track* pin is pulled low at a slew rate greater than 1 V/ms, the discharge of the output capacitors will induce large currents which could exceed the peak current rating of the module. This will result in a reduction in the maximum allowable output capacitance as listed in the Electrical Characteristics table. When controlling the *Track* pin of the PTV05020W using a voltage supervisor IC, the slew rate is increased, therefore $C_O$max is reduced to 6600µF.

Notes on Use of Auto-Track™

1. The Auto-Track function tracks almost any voltage ramp during power up, and is compatible with ramp speeds of up to 1 V/ms.

Copyright © 2005–2007, Texas Instruments Incorporated

2. The *Track* pin voltage must be allowed to rise above the module set-point voltage before the module regulates at its adjusted set-point voltage.
3. The absolute maximum voltage that may be applied to the *Track* pin is the input voltage V_I.
4. The module cannot follow a voltage at its track control input until it has completed its soft-start initialization. This takes about 20 ms from the time that a valid voltage has been applied to its input. During this period, it is recommended that the *Track* pin be held at ground potential.
5. The Auto-Track function is disabled by connecting the *Track* pin to the input voltage (V_I). When Auto-Track is disabled, the output voltage rises at a quicker and more linear rate after input power has been applied.

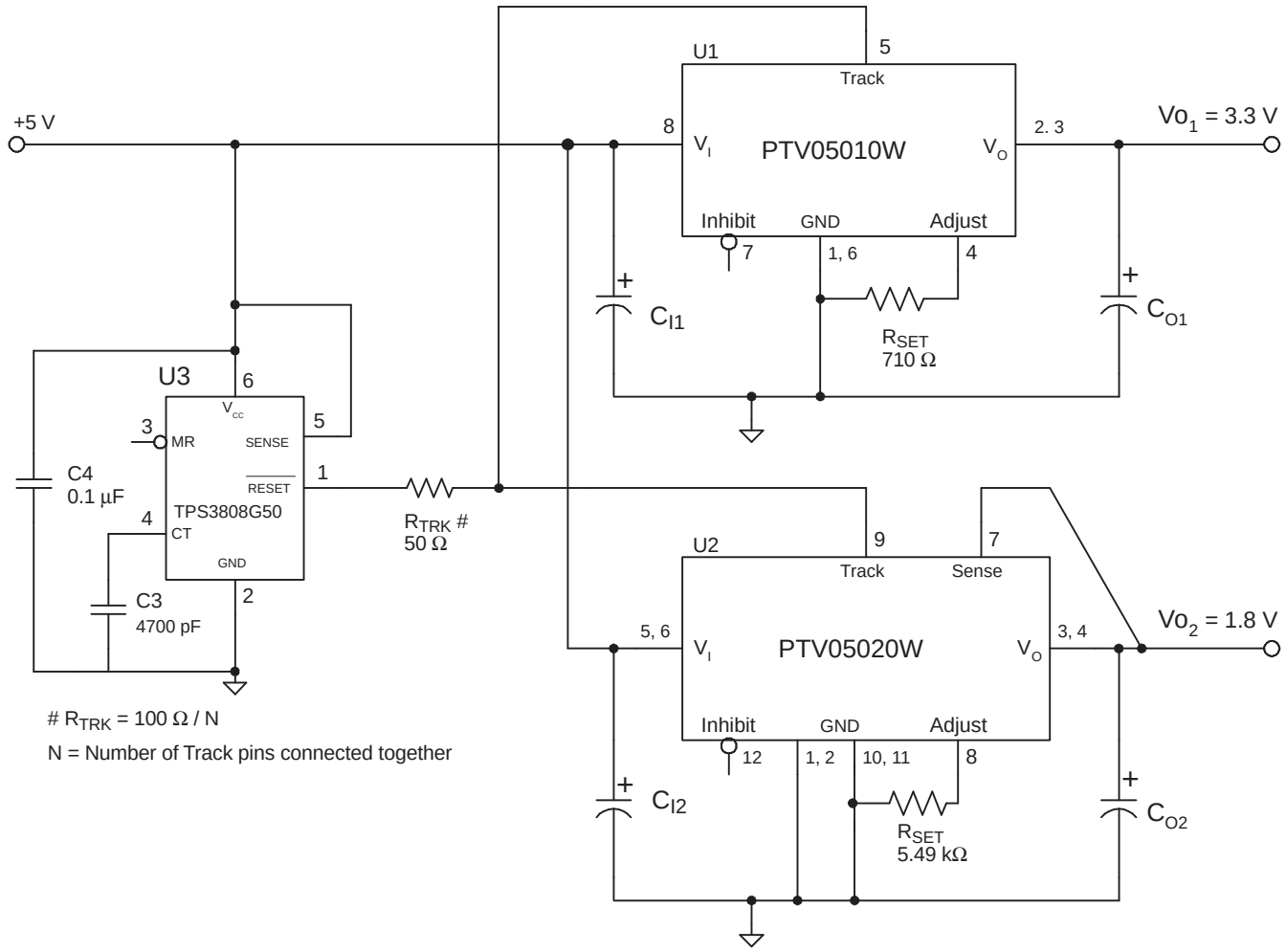

Figure 11. Sequenced Power Up and Power Down Using Auto-Track

Copyright © 2005–2007, Texas Instruments Incorporated

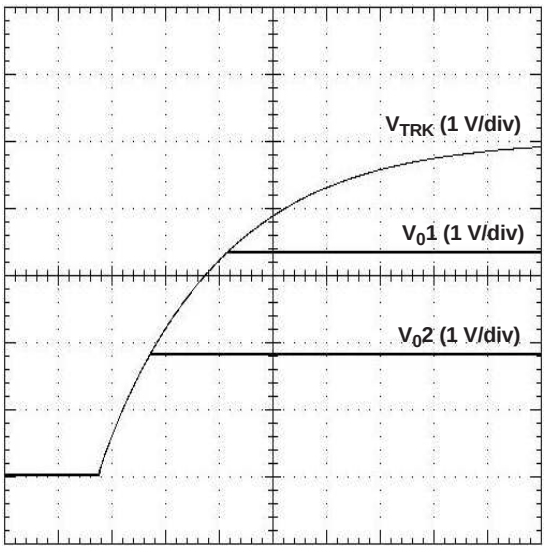

Figure 12. Simultaneous Power Up With Auto-Track Control

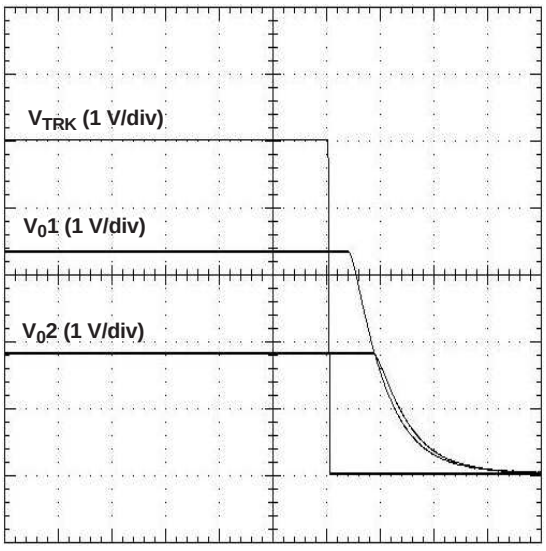

Figure 13. Simultaneous Power Down With Auto-Track Control

Prebias Start-Up Capability

A prebias start-up condition occurs as a result of an external voltage being present at the output of a power module prior to its output becoming active. This often occurs in complex digital systems when current from another power source is backfed through a dual-supply logic component, such as an FPGA or ASIC. Another path might be via clamp diodes, sometimes used as part of a dual-supply power-up sequencing arrangement. A prebias can cause problems with power modules that incorporate synchronous rectifiers. This is because under most operating conditions, such modules can sink as well as source output current. The PTH/PTV modules incorporate synchronous rectifiers but do not sink current during start-up, or whenever the *Inhibit* pin is held low. Start-up includes an initial delay (approximately 8–15 ms), followed by the rise of the output voltage under the control of the module internal soft-start mechanism; see Figure 14.

Conditions for Prebias Holdoff

In order for the module to allow an output prebias voltage to exist (and not sink current), certain conditions must be maintained. The module holds off a prebias voltage when the *Inhibit* pin is held low, and whenever the output is allowed to rise under soft-start control. Power up under soft-start control occurs on the removal of the ground signal to the Inhibit pin (with input voltage applied), or when input power is applied with Auto-Track disabled(1). To further ensure that the regulator does not sink output current (even with a ground signal applied to its *Inhibit*), the input voltage must also be greater than the applied prebias source, throughout the power-up sequence(2).

The soft-start period is complete when the output begins rising above the prebias voltage. The module then functions as normal, and sinks current if a voltage higher than its set-point value is applied to its output.

Note: *If a prebias condition is not present, the soft-start period is complete when the output voltage has risen to either the set-point voltage, or the voltage applied at the module Track control pin, whichever is lowest, to its output.*

Demonstration Circuit

Figure 15 shows the start-up waveforms for the demonstration circuit shown in Figure 16. The initial rise in V_O2 is the prebias voltage, which is passed from the VCCIO to the VCORE voltage rail through the ASIC. Note that the output current from the module (I_O2) is negligible until its output voltage rises above the applied prebias.

Copyright © 2005–2007, Texas Instruments Incorporated

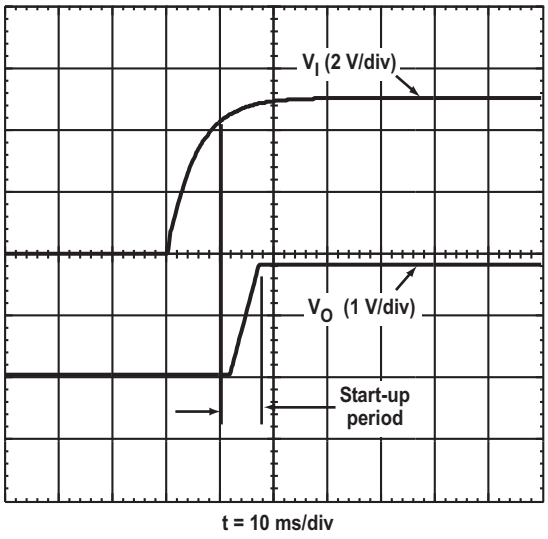

Figure 14. PTV05020W Start-Up

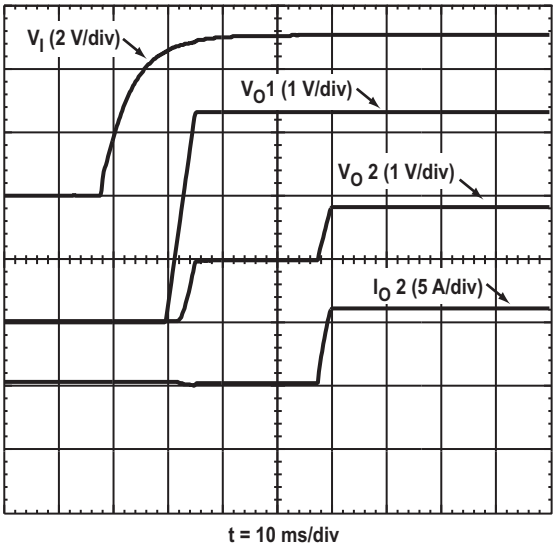

Figure 15. Prebias Start-Up Waveforms

NOTES:

1. The prebias start-up feature is not compatible with Auto-Track. If the rise in the output is limited by the voltage applied to the *Track* control pin, the output sinks current during the period that the track control voltage is below that of the back-feeding source. For this reason, Auto-Track should be disabled when not being used. This is accomplished by connecting the *Track* pin to the input voltage, V_I. This raises the *Track* pin well above the set-point voltage prior to start-up, thereby defeating the Auto-Track feature.
2. To further ensure that the regulator output does not sink current when power is first applied (even with a ground signal applied to the *Inhibit* control input), the input voltage *must* always be greater than the applied prebias source. This condition must exist *throughout* the power-up sequence of the power system.

Copyright © 2005–2007, Texas Instruments Incorporated

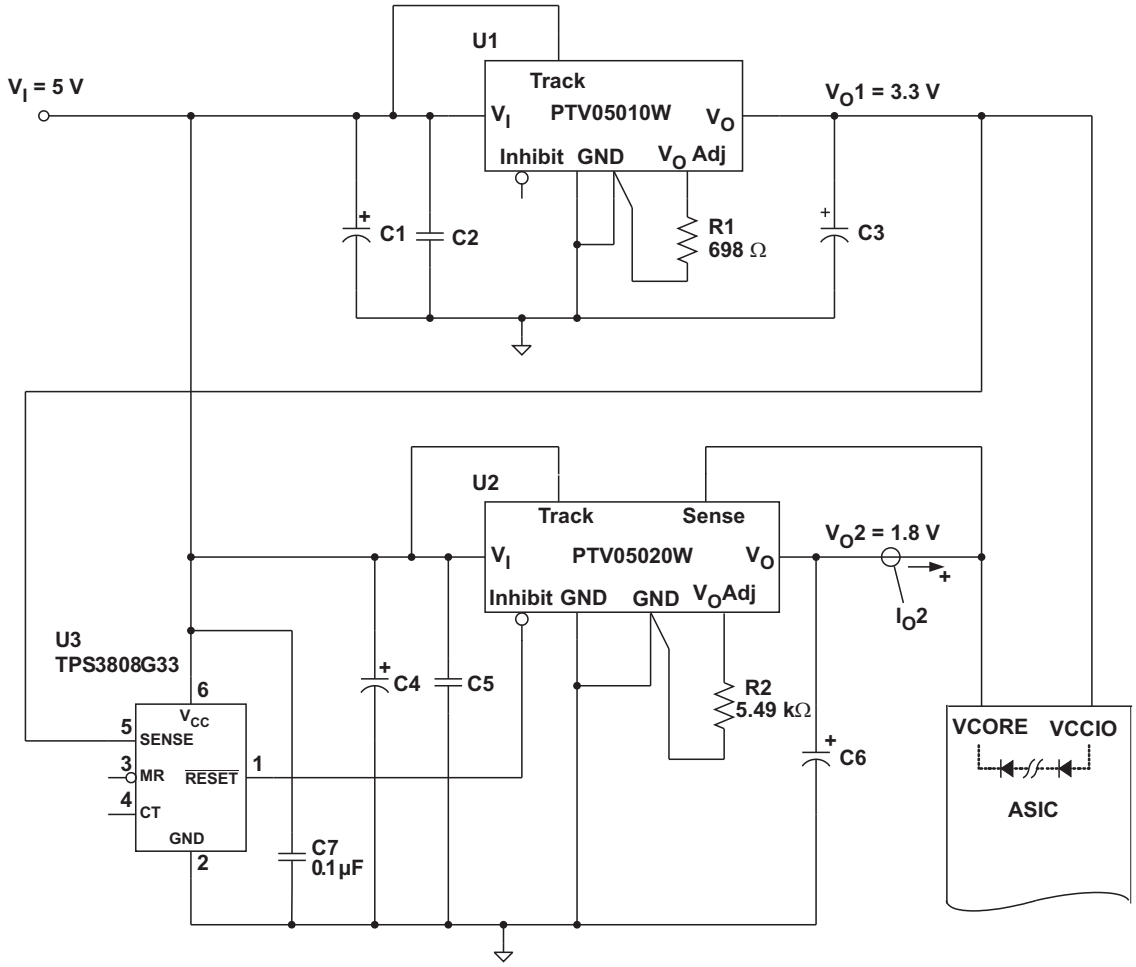

Figure 16. Application Circuit Demonstrating Prebias Start-Up

Output Remote Sense

Products with this feature incorporate an output voltage sense input, *V_O Sense*. A remote sense improves the load regulation performance of the module by allowing it to compensate for any remote *IR* voltage drop between its output and the load. An IR drop is caused by the output current flowing through the small amount of pin and trace resistance.

To use this feature, simply connect *V_O Sense* to the *V_O* node, close to the load circuit (see the data sheet standard application). If the V_O Sense input is left open-circuit, an internal low-value resistor (15 Ω or less) connected between the pin and the output node, ensures that the output remains in regulation.

With the sense input connected, the difference between the voltage measured directly between the *V_O* and *GND* pins, and that measured from *V_O Sense* to *GND*, is the amount of IR drop being compensated by the regulator. This should be limited to a maximum of 0.3 V.

Note: *The remote sense feature is not designed to compensate for the forward drop of nonlinear or frequency dependent components that may be placed in series with the output. Examples include OR-ing diodes, filter inductors, ferrite beads, and fuses. When these components are enclosed by the remote sense connection, they are effectively placed inside the regulation control loop, which can adversely affect the stability of the module.*

Copyright © 2005–2007, Texas Instruments Incorporated

PACKAGING INFORMATION

Orderable part number	Status (1)	Material type (2)	Package | Pins	Package qty | Carrier	RoHS (3)	Lead finish/ Ball material (4)	MSL rating/ Peak reflow (5)	Op temp (°C)	Part marking (6)
PTV05020WAH	Obsolete	Production	SIP MODULE (EVC) | 12	-	-			-40 to 85	

(1) **Status:** For more details on status, see our product life cycle.

(2) **Material type:** When designated, preproduction parts are prototypes/experimental devices, and are not yet approved or released for full production. Testing and final process, including without limitation quality assurance, reliability performance testing, and/or process qualification, may not yet be complete, and this item is subject to further changes or possible discontinuation. If available for ordering, purchases will be subject to an additional waiver at checkout, and are intended for early internal evaluation purposes only. These items are sold without warranties of any kind.

(3) **RoHS values:** Yes, No, RoHS Exempt. See the TI RoHS Statement for additional information and value definition.

(4) **Lead finish/Ball material:** Parts may have multiple material finish options. Finish options are separated by a vertical ruled line. Lead finish/Ball material values may wrap to two lines if the finish value exceeds the maximum column width.

(5) **MSL rating/Peak reflow:** The moisture sensitivity level ratings and peak solder (reflow) temperatures. In the event that a part has multiple moisture sensitivity ratings, only the lowest level per JEDEC standards is shown. Refer to the shipping label for the actual reflow temperature that will be used to mount the part to the printed circuit board.

(6) **Part marking:** There may be an additional marking, which relates to the logo, the lot trace code information, or the environmental category of the part.

Multiple part markings will be inside parentheses. Only one part marking contained in parentheses and separated by a "~" will appear on a part. If a line is indented then it is a continuation of the previous line and the two combined represent the entire part marking for that device.

Important Information and Disclaimer: The information provided on this page represents TI's knowledge and belief as of the date that it is provided. TI bases its knowledge and belief on information provided by third parties, and makes no representation or warranty as to the accuracy of such information. Efforts are underway to better integrate information from third parties. TI has taken and continues to take reasonable steps to provide representative and accurate information but may not have conducted destructive testing or chemical analysis on incoming materials and chemicals. TI and TI suppliers consider certain information to be proprietary, and thus CAS numbers and other limited information may not be available for release.

In no event shall TI's liability arising out of such information exceed the total purchase price of the TI part(s) at issue in this document sold by TI to Customer on an annual basis.

EVC (R–PDSS–T12) DOUBLE SIDED MODULE

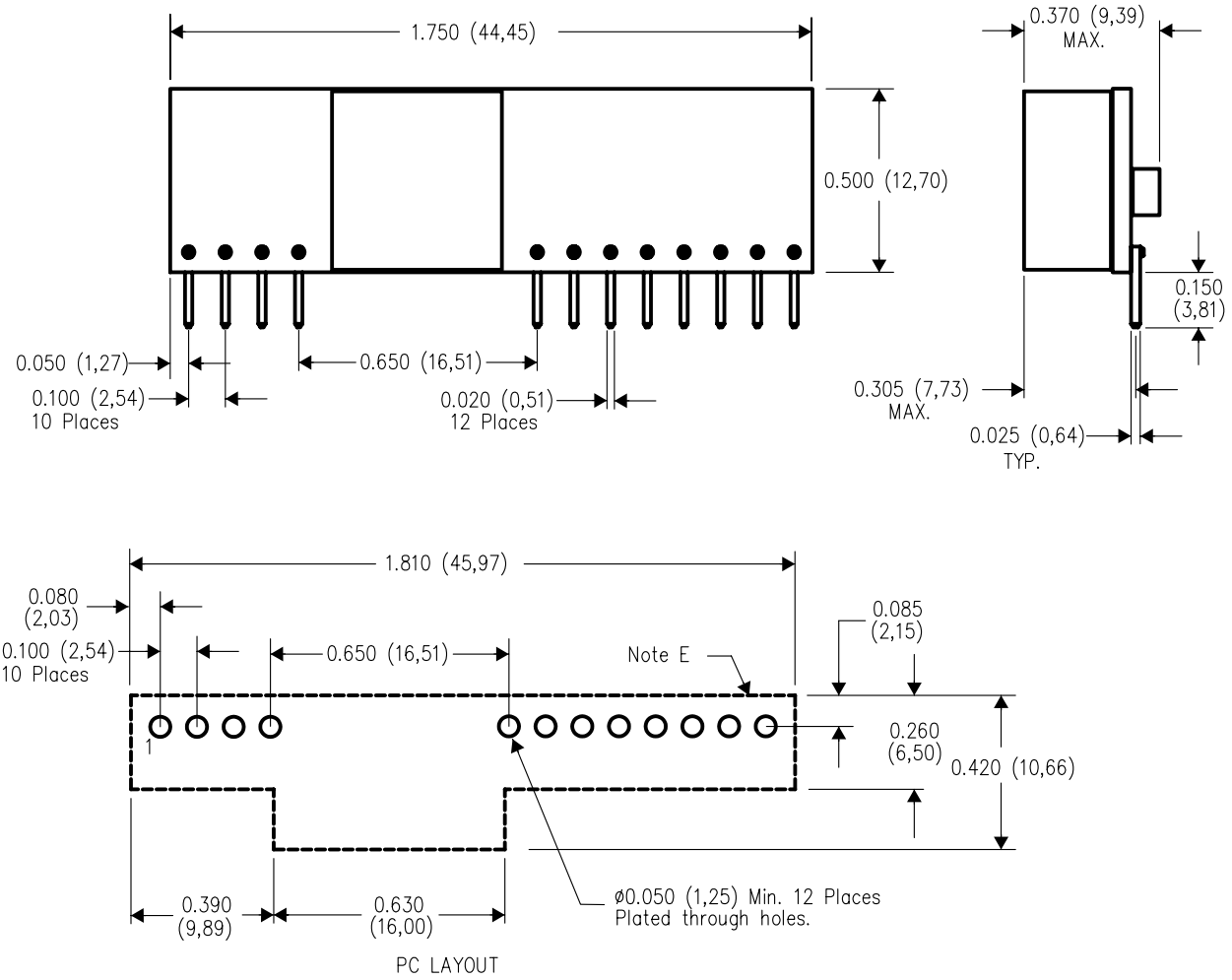

NOTES:
A. All linear dimensions are in inches (mm).
B. This drawing is subject to change without notice.
C. 2 place decimals are ±0.030 (±0,76mm).
D. 3 place decimals are ±0.010 (±0,25mm).
E. Recommended keep out area for user components.
F. Pins are 0.020" (0,51) x 0.025" (0,64).
G. All pins: Material – Copper Alloy
Finish – Tin (100%) over Nickel plate

IMPORTANT NOTICE AND DISCLAIMER

TI PROVIDES TECHNICAL AND RELIABILITY DATA (INCLUDING DATASHEETS), DESIGN RESOURCES (INCLUDING REFERENCE DESIGNS), APPLICATION OR OTHER DESIGN ADVICE, WEB TOOLS, SAFETY INFORMATION, AND OTHER RESOURCES “AS IS” AND WITH ALL FAULTS, AND DISCLAIMS ALL WARRANTIES, EXPRESS AND IMPLIED, INCLUDING WITHOUT LIMITATION ANY IMPLIED WARRANTIES OF MERCHANTABILITY, FITNESS FOR A PARTICULAR PURPOSE OR NON-INFRINGEMENT OF THIRD PARTY INTELLECTUAL PROPERTY RIGHTS.

These resources are intended for skilled developers designing with TI products. You are solely responsible for (1) selecting the appropriate TI products for your application, (2) designing, validating and testing your application, and (3) ensuring your application meets applicable standards, and any other safety, security, regulatory or other requirements.

These resources are subject to change without notice. TI grants you permission to use these resources only for development of an application that uses the TI products described in the resource. Other reproduction and display of these resources is prohibited. No license is granted to any other TI intellectual property right or to any third party intellectual property right. TI disclaims responsibility for, and you fully indemnify TI and its representatives against any claims, damages, costs, losses, and liabilities arising out of your use of these resources.

TI’s products are provided subject to TI’s Terms of Sale, TI’s General Quality Guidelines, or other applicable terms available either on ti.com or provided in conjunction with such TI products. TI’s provision of these resources does not expand or otherwise alter TI’s applicable warranties or warranty disclaimers for TI products. Unless TI explicitly designates a product as custom or customer-specified, TI products are standard, catalog, general purpose devices.

TI objects to and rejects any additional or different terms you may propose.

Copyright © 2026, Texas Instruments Incorporated

Last updated 10/2025