SNx4HC244 Octal Buffers and Line Drivers With 3-State Outputs

1 Features

- Wide operating voltage range of 2V to 6V
- High-current outputs drive up to 15 LSTTL loads
- 3-state outputs drive bus lines or buffer memory address registers
- Low power consumption: I_{CC}, 80µA (maximum)
- Typical t_{pd} = 11ns
- ±6mA output drive at 5V
- Low input current of 1µA (maximum)
- On products compliant to MIL-PRF-38535, all parameters are tested unless otherwise noted. On all other products, production processing does not necessarily include testing of all parameters.

2 Applications

- Servers
- LED Displays
- Network Switches
- Telecom Infrastructure
- Motor Drivers
- I/O Expanders

3 Description

The SNx4HC244 octal buffers and line drivers are designed specifically to improve both the performance and density of 3-state memory address drivers, clock drivers, and bus-oriented receivers and transmitters. The SNx4HC244 devices are organized as two 4-bit buffers and drivers with separate output-enable ($\overline{OE}$) inputs. When $\overline{OE}$ is low, the device passes noninverted data from the A inputs to the Y outputs. When $\overline{OE}$ is high, the outputs are in the high-impedance state.

Package Information

PART NUMBER	PACKAGE(1)	PACKAGE SIZE(2)	BODY SIZE(3)
SN54HC244	J (CDIP, 20)	24.38mm × 7.62mm	24.38mm × 6.92mm
	W (CFP, 20)	13.72mm × 8.13mm	13.72mm × 6.92mm
	FK (LCCC, 20)	8.89mm × 8.89mm	8.89mm × 8.89mm
SN74HC244	DB (SSOP, 20)	7.2mm × 7.8mm	7.2mm × 5.3mm
	DW (SOIC, 20)	12.80mm × 10.3mm	12.8mm × 7.5mm
	N (PDIP, 20)	24.33mm x 9.4mm	24.33mm × 6.35mm
	NS (SOP, 20)	12.6mm × 7.8mm	12.6mm × 5.3mm
	PW (TSSOP, 20)	6.5mm × 6.4mm	6.5mm × 4.4mm

(1) For more information, see Mechanical, Packaging, and Orderable Information.
(2) The package size (length × width) is a nominal value and includes pins, where applicable.
(3) The body size (length × width) is a nominal value and does not include pins.

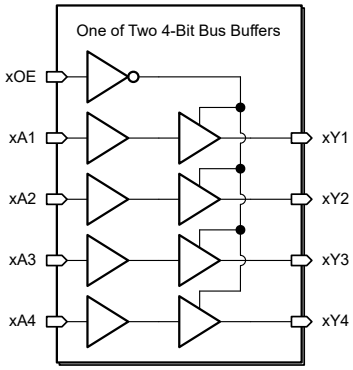

Logic Diagram (Positive Logic)

An IMPORTANT NOTICE at the end of this data sheet addresses availability, warranty, changes, use in safety-critical applications, intellectual property matters and other important disclaimers. PRODUCTION DATA.

Table of Contents

1 Features....1
2 Applications....1
3 Description....1
4 Pin Configuration and Functions....3
5 Specifications....4
5.1 Absolute Maximum Ratings....4
5.2 ESD Ratings....4
5.3 Recommended Operating Conditions....4
5.4 Thermal Information....5
5.5 Electrical Characteristics....5
5.6 Electrical Characteristics – -55°C – 125°C....5
5.7 Electrical Characteristics – -40°C – 125°C....6
5.8 Electrical Characteristics – -40°C – 85°C....6
5.9 Switching Characteristics....7
5.10 Switching Characteristics – C_L = 50pF....8
5.11 Switching Characteristics – C_L = 150pF....10
5.12 Typical Characteristic....11
6 Parameter Measurement Information....12
7 Detailed Description....14
7.1 Overview....14
7.2 Functional Block Diagram....14
7.3 Feature Description....14
7.4 Device Functional Modes....14
8 Application and Implementation....16
8.1 Application Information....16
8.2 Typical Application....16
8.3 Power Supply Recommendations....18
8.4 Layout Guidelines....18
9 Device and Documentation Support....20
9.1 Documentation Support....20
9.2 Receiving Notification of Documentation Updates....20
9.3 Support Resources....20
9.4 Trademarks....20
9.5 Electrostatic Discharge Caution....20
9.6 Glossary....20
10 Revision History....20
11 Mechanical, Packaging, and Orderable Information....20

Copyright © 2026 Texas Instruments Incorporated

4 Pin Configuration and Functions

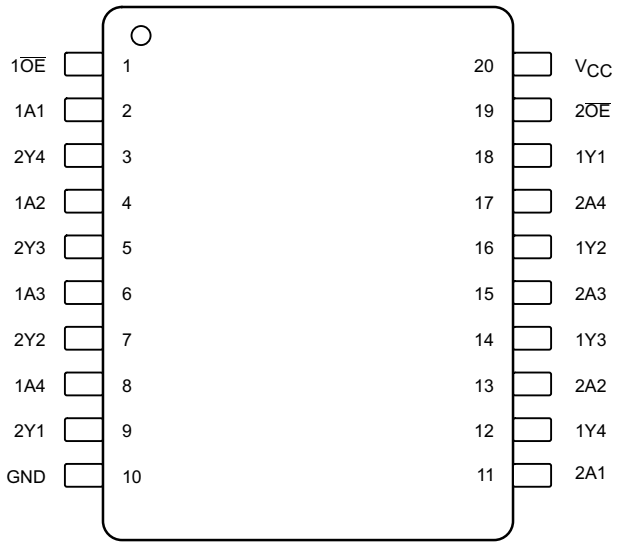

Figure 4-1. DB, DW, J, N, NS, PW, W Package 20-Pin SSOP, SOIC, CDIP, PDIP, SOP, TSSOP, or CFP Top View

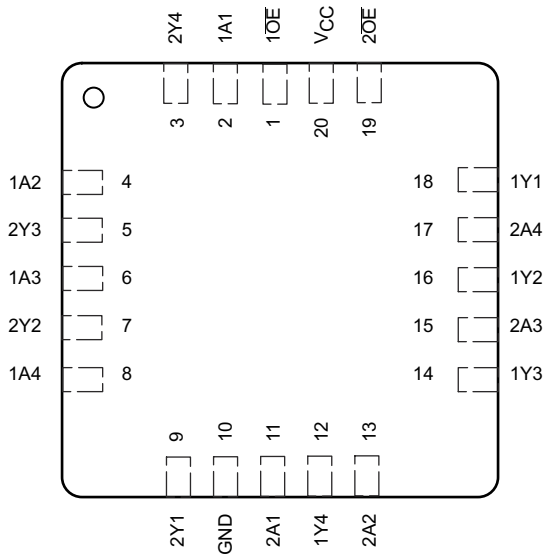

Figure 4-2. FK Package 20-Pin LCCC Top View

PIN		TYPE(1)	DESCRIPTION
NAME	NO.		
1A1	2	I	Input
1A2	4	I	Input
1A3	6	I	Input
1A4	8	I	Input
1 $\overline{OE}$	1	I	Output Enable
1Y1	18	O	Output
1Y2	16	O	Output
1Y3	14	O	Output
1Y4	12	O	Output
2A1	11	I	Input
2A2	13	I	Input
2A3	15	I	Input
2A4	17	I	Input
2 $\overline{OE}$	19	I	Output Enable
2Y1	9	O	Output
2Y2	7	O	Output
2Y3	5	O	Output
2Y4	3	O	Output
GND	10	—	Ground
V_{CC}	20	—	Power Pin

(1) Signal Types: I = Input, O = Output

Copyright © 2026 Texas Instruments Incorporated

5 Specifications

5.1 Absolute Maximum Ratings

over operating free-air temperature range (unless otherwise noted)(1)

		MIN	MAX	UNIT
Supply voltage range, V_{CC}		–0.5	7	V
Input clamp current, I_{IK}	$V_I < 0$ or $V_I > V_{CC}$ (2)		±20	mA
Output clamp current, I_{OK}	$V_O < 0$ or $V_O > V_{CC}$ (2)		±20	mA
Continuous output current, I_O	$V_O = 0$ or V_{CC}		±35	mA
Continuous current through V_{CC} or GND			±70	mA
Junction Temperature, T_J			150	°C
Storage temperature, T_{stg}		–65	150	°C

(1) Operation outside the *Absolute Maximum Ratings* may cause permanent device damage. *Absolute Maximum Ratings* do not imply functional operation of the device at these or any other conditions beyond those listed under *Recommended Operating Conditions*. If used outside the *Recommended Operating Conditions* but within the *Absolute Maximum Ratings*, the device may not be fully functional, and this may affect device reliability, functionality, performance, and shorten the device lifetime.
(2) The input and output voltage ratings may be exceeded if the input and output current ratings are observed.

5.2 ESD Ratings

	SN74HC244		VALUE	UNIT
$V_{(ESD)}$	Electrostatic discharge	Human-body model (HBM), per ANSI/ESDA/JEDEC JS-001(1)	±2000	V
		Charged-device model (CDM), per JEDEC specification JESD22-C101(2)	±1000	

(1) JEDEC document JEP155 states that 500V HBM allows safe manufacturing with a standard ESD control process.
(2) JEDEC document JEP157 states that 250V CDM allows safe manufacturing with a standard ESD control process.

5.3 Recommended Operating Conditions

over operating free-air temperature range (unless otherwise noted)(1)

			MIN	NOM	MAX	UNIT
V_{CC}	Supply voltage		2	5	6	V
V_{IH}	High-level input voltage	V_{CC} = 2V	1.5			V
		V_{CC} = 4.5V	3.15			
		V_{CC} = 6V	4.2			
V_{IL}	Low-level input voltage	V_{CC} = 2V			0.5	V
		V_{CC} = 4.5V			1.35	
		V_{CC} = 6V			1.8	
V_I	Input voltage		0		V_{CC}	V
V_O	Output voltage		0		V_{CC}	V
Δt/Δv	Input transition rise and fall time	V_{CC} = 2V			1000	ns/V
		V_{CC} = 4.5V			500	
		V_{CC} = 6V			400	
C_{pd}	Power dissipation capacitance per buffer or driver (no load)			35		pF
T_A	Operating free-air temperature	SN54HC244	–55		125	°C
		SN74HC244	–40		125	

(1) All unused inputs of the device must be held at V_{CC} or GND to ensure proper device operation. Refer to the TI application note, *Implications of Slow or Floating CMOS Inputs*.

Copyright © 2026 Texas Instruments Incorporated

5.4 Thermal Information

THERMAL METRIC		SN74HC244					UNIT
		DW (SOIC)	DB (SSOP)	N (PDIP)	NS (SO)	PW (TSSOP)	
		20 PINS	20 PINS	20 PINS	20 PINS	20 PINS	
$R_{\theta JA}$	Junction-to-ambient thermal resistance (1)	109.1	122.7	84.6	113.4	131.8	°C/W
$R_{\theta JC\ (top)}$	Junction-to-case (top) thermal resistance	76	81.6	72.5	78.6	72.2	°C/W
$R_{\theta JB}$	Junction-to-board thermal resistance	77.6	77.5	65.3	78.4	82.8	°C/W
Ψ_{JT}	Junction-to-top characterization parameter	51.5	46.1	55.3	47.1	21.5	°C/W
Ψ_{JB}	Junction-to-board characterization parameter	77.1	77.1	65.2	78.1	82.4	°C/W
$R_{\theta JC\ (bot)}$	Junction-to-case (bottom) thermal resistance	N/A	N/A	N/A	N/A	N/A	°C/W

(1) For more information about traditional and new thermal metrics, see the *Semiconductor and IC Package Thermal Metrics* application note.

5.5 Electrical Characteristics

T_A = 25°C (unless otherwise noted)

PARAMETER	TEST CONDITIONS			MIN	TYP	MAX	UNIT
V_{OH}	V_I = V_{IH} or V_{IL}	I_{OH} = –20 µA	V_{CC} = 2V	1.9	1.998		V
			V_{CC} = 4.5V	4.4	4.499		
			V_{CC} = 6V	5.9	5.999		
		I_{OH} = –6mA, V_{CC} = 4.5V		3.98	4.3		
		I_{OH} = –7.8mA, V_{CC} = 6V		5.48	5.8		
V_{OL}	V_I = V_{IH} or V_{IL}	I_{OL} = 20 µA	V_{CC} = 2V		0.002	0.1	V
			V_{CC} = 4.5V		0.001	0.1	
			V_{CC} = 6V		0.001	0.1	
		I_{OL} = 6mA, V_{CC} = 4.5V			0.17	0.26	
		I_{OL} = 7.8mA, V_{CC} = 6V			0.15	0.26	
I_I	V_I = V_{CC} or 0, V_{CC} = 6V				±0.1	±100	nA
I_{OZ}	V_O = V_{CC} or 0, V_I = V_{IH} or V_{IL}, V_{CC} = 6V				±0.01	±0.5	µA
I_{CC}	V_I = V_{CC} or 0, I_O = 0, V_{CC} = 6V					8	µA
C_i	V_{CC} = 2V to 6V				3	10	pF

5.6 Electrical Characteristics – -55°C – 125°C

over recommended operating free-air temperature range (unless otherwise noted)

PARAMETER	TEST CONDITIONS			MIN	TYP	MAX	UNIT
V_{OH}	V_I = V_{IH} or V_{IL}	I_{OH} = –20 µA	V_{CC} = 2V	1.9			V
			V_{CC} = 4.5V	4.4			
			V_{CC} = 6V	5.9			
		I_{OH} = –6mA, V_{CC} = 4.5V		3.7			
		I_{OH} = –7.8mA, V_{CC} = 6V		5.2			

Copyright © 2026 Texas Instruments Incorporated

over recommended operating free-air temperature range (unless otherwise noted)

PARAMETER	TEST CONDITIONS			MIN	TYP	MAX	UNIT
V_{OL}	$V_I = V_{IH}$ or V_{IL}	I_{OL} = 20μA	V_{CC} = 2V			0.1	V
			V_{CC} = 4.5V			0.1	
			V_{CC} = 6V			0.1	
		I_{OL} = 6mA, V_{CC} = 4.5V				0.4	
		I_{OL} = 7.8mA, V_{CC} = 6V				0.4	
I_I	$V_I = V_{CC}$ or 0, V_{CC} = 6V					±1000	nA
I_{OZ}	$V_O = V_{CC}$ or 0, $V_I = V_{IH}$ or V_{IL}, V_{CC} = 6V					±10	μA
I_{CC}	$V_I = V_{CC}$ or 0, I_O = 0, V_{CC} = 6V					160	μA
C_i	V_{CC} = 2V to 6V					10	pF

5.7 Electrical Characteristics – -40°C – 125°C

over recommended operating free-air temperature range (unless otherwise noted)

PARAMETER	TEST CONDITIONS			MIN	TYP	MAX	UNIT
V_{OH}	$V_I = V_{IH}$ or V_{IL}	I_{OH} = –20 μA	V_{CC} = 2V	1.9			V
			V_{CC} = 4.5V	4.4			
			V_{CC} = 6V	5.9			
		I_{OH} = –6mA, V_{CC} = 4.5V		3.7			
		I_{OH} = –7.8mA, V_{CC} = 6V		5.2			
V_{OL}	$V_I = V_{IH}$ or V_{IL}	I_{OL} = 20 μA	V_{CC} = 2V			0.1	V
			V_{CC} = 4.5V			0.1	
			V_{CC} = 6V			0.1	
		I_{OL} = 6mA, V_{CC} = 4.5V				0.4	
		I_{OL} = 7.8mA, V_{CC} = 6V				0.4	
I_I	$V_I = V_{CC}$ or 0, V_{CC} = 6 V					±1000	nA
I_{OZ}	$V_O = V_{CC}$ or 0, $V_I = V_{IH}$ or V_{IL}, V_{CC} = 6V					±10	μA
I_{CC}	$V_I = V_{CC}$ or 0, I_O = 0, V_{CC} = 6V					160	μA
C_i	V_{CC} = 2V to 6V					10	pF

5.8 Electrical Characteristics – -40°C – 85°C

over recommended operating free-air temperature range (unless otherwise noted)

PARAMETER	TEST CONDITIONS			MIN	TYP	MAX	UNIT
V_{OH}	$V_I = V_{IH}$ or V_{IL}	I_{OH} = –20μA	V_{CC} = 2V	1.9			V
			V_{CC} = 4.5V	4.4			
			V_{CC} = 6V	5.9			
		I_{OH} = –6mA, V_{CC} = 4.5V		3.84			
		I_{OH} = –7.8mA, V_{CC} = 6V		5.34			
V_{OL}	$V_I = V_{IH}$ or V_{IL}	I_{OL} = 20μA	V_{CC} = 2V			0.1	V
			V_{CC} = 4.5V			0.1	
			V_{CC} = 6V			0.1	
		I_{OL} = 6mA, V_{CC} = 4.5V				0.33	
		I_{OL} = 7.8mA, V_{CC} = 6V				0.33	
I_I	$V_I = V_{CC}$ or 0, V_{CC} = 6V					±1000	nA
I_{OZ}	$V_O = V_{CC}$ or 0, $V_I = V_{IH}$ or V_{IL}, V_{CC} = 6V					±5	μA
I_{CC}	$V_I = V_{CC}$ or 0, I_O = 0, V_{CC} = 6V					80	μA

Copyright © 2026 Texas Instruments Incorporated

over recommended operating free-air temperature range (unless otherwise noted)

PARAMETER	TEST CONDITIONS	MIN	TYP	MAX	UNIT
C_i	V_{CC} = 2V to 6V			10	pF

5.9 Switching Characteristics

T_A = 25°C (unless otherwise noted; see Figure 6-1)

PARAMETER	TEST CONDITIONS			MIN	TYP	MAX	UNIT
t_{pd}	From A (input) to Y (output)	V_{CC} = 2V	C_L = 50pF		40	115	ns
			C_L = 150pF		56	165	
		V_{CC} = 4.5V	C_L = 50pF		13	23	
			C_L = 150pF		18	33	
		V_{CC} = 6V	C_L = 50pF		11	20	
			C_L = 150pF		15	28	
t_{en}	From $\overline{OE}$ (input) to Y (output)	V_{CC} = 2V	C_L = 50pF		75	150	ns
			C_L = 150pF		100	200	
		V_{CC} = 4.5V	C_L = 50pF		15	30	
			C_L = 150pF		20	40	
		V_{CC} = 6V	C_L = 50pF		13	26	
			C_L = 150pF		17	34	
t_{dis}	From $\overline{OE}$ (input) to Y (output)	V_{CC} = 2V	C_L = 50pF		75	150	ns
		V_{CC} = 4.5V	C_L = 50pF		15	30	
		V_{CC} = 6V	C_L = 50pF		13	26	
t_t	To Y (output)	V_{CC} = 2V	C_L = 50pF		28	60	ns
			C_L = 150pF		45	210	
		V_{CC} = 4.5V	C_L = 50pF		8	12	
			C_L = 150pF		17	42	
		V_{CC} = 6V	C_L = 50pF		6	10	
			C_L = 150pF		13	36	

Copyright © 2026 Texas Instruments Incorporated

5.10 Switching Characteristics – C_L = 50pF

over recommended operating free-air temperature range (unless otherwise noted; see Figure 6-1)

PARAMETER	TEST CONDITIONS			MIN	TYP	MAX	UNIT
t_{pd}	From A (input) to Y (output)	V_{CC} = 2V	T_A = -55°C to 125°C			170	ns
			T_A = -40°C to 125°C			170	
			T_A = -40°C to 85°C			145	
		V_{CC} = 4.5V	T_A = -55°C to 125°C			34	
			T_A = -40°C to 125°C			34	
			T_A = -40°C to 85°C			29	
		V_{CC} = 6V	T_A = -55°C to 125°C			29	
			T_A = -40°C to 125°C			29	
			T_A = -40°C to 85°C			25	
t_{en}	From $\overline{OE}$ (input) to Y (output)	V_{CC} = 2V	T_A = -55°C to 125°C			225	ns
			T_A = -40°C to 125°C			225	
			T_A = -40°C to 85°C			190	
		V_{CC} = 4.5V	T_A = -55°C to 125°C			45	
			T_A = -40°C to 125°C			45	
			T_A = -40°C to 85°C			38	
		V_{CC} = 6V	T_A = -55°C to 125°C			38	
			T_A = -40°C to 125°C			38	
			T_A = -40°C to 85°C			32	

Copyright © 2026 Texas Instruments Incorporated

over recommended operating free-air temperature range (unless otherwise noted; see Figure 6-1)

PARAMETER	TEST CONDITIONS			MIN	TYP	MAX	UNIT
t_{dis}	From $\overline{OE}$ (input) to Y (output)	V_{CC} = 2V	T_A = -55°C to 125°C			225	ns
			T_A = -40°C to 125°C			225	
			T_A = -40°C to 85°C			190	
		V_{CC} = 4.5V	T_A = -55°C to 125°C			45	
			T_A = -40°C to 125°C			45	
			T_A = -40°C to 85°C			38	
		V_{CC} = 6V	T_A = -55°C to 125°C			38	
			T_A = -40°C to 125°C			38	
			T_A = -40°C to 85°C			32	
t_t	To Y (output)	V_{CC} = 2V	T_A = -55°C to 125°C			90	ns
			T_A = -40°C to 125°C			90	
			T_A = -40°C to 85°C			75	
		V_{CC} = 4.5V	T_A = -55°C to 125°C			18	
			T_A = -40°C to 125°C			18	
			T_A = -40°C to 85°C			15	
		V_{CC} = 6V	T_A = -55°C to 125°C			15	
			T_A = -40°C to 125°C			15	
			T_A = -40°C to 85°C			13	

Copyright © 2026 Texas Instruments Incorporated

5.11 Switching Characteristics – C_L = 150pF

over recommended operating free-air temperature range (unless otherwise noted; see Figure 6-1)

PARAMETER	TEST CONDITIONS			MIN	TYP	MAX	UNIT
t_{pd}	From A (input) to Y (output)	V_{CC} = 2 V	T_A = -55°C to 125°C			245	ns
			T_A = -40°C to 125°C			245	
			T_A = -40°C to 85°C			210	
		V_{CC} = 4.5 V	T_A = -55°C to 125°C			49	
			T_A = -40°C to 125°C			49	
			T_A = -40°C to 85°C			42	
		V_{CC} = 6 V	T_A = -55°C to 125°C			42	
			T_A = -40°C to 125°C			42	
			T_A = -40°C to 85°C			35	
t_{en}	From $\overline{OE}$ (input) to Y (output)	V_{CC} = 2 V	T_A = -55°C to 125°C			300	ns
			T_A = -40°C to 125°C			300	
			T_A = -40°C to 85°C			250	
		V_{CC} = 4.5 V	T_A = -55°C to 125°C			60	
			T_A = -40°C to 125°C			60	
			T_A = -40°C to 85°C			50	
		V_{CC} = 6 V	T_A = -55°C to 125°C			51	
			T_A = -40°C to 125°C			51	
			T_A = -40°C to 85°C			43	

Copyright © 2026 Texas Instruments Incorporated

over recommended operating free-air temperature range (unless otherwise noted; see Figure 6-1)

PARAMETER	TEST CONDITIONS			MIN	TYP	MAX	UNIT
t_t	To Y (output)	V_{CC} = 2 V	T_A = -55°C to 125°C			315	ns
			T_A = -40°C to 125°C			315	
			T_A = -40°C to 85°C			265	
		V_{CC} = 4.5 V	T_A = -55°C to 125°C			63	
			T_A = -40°C to 125°C			63	
			T_A = -40°C to 85°C			53	
		V_{CC} = 6 V	T_A = -55°C to 125°C			53	
			T_A = -40°C to 125°C			53	
			T_A = -40°C to 85°C			45	

5.12 Typical Characteristic

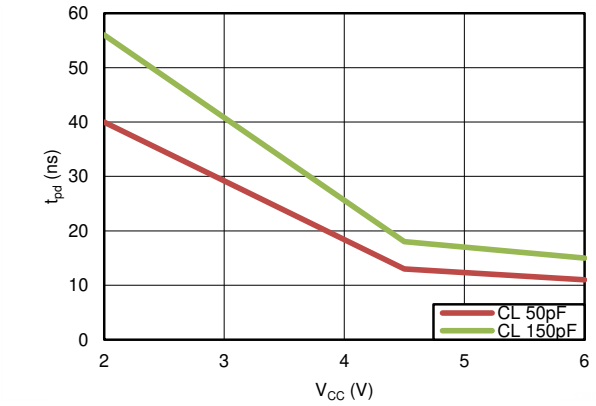

Figure 5-1. Propagation Delay

Copyright © 2026 Texas Instruments Incorporated

6 Parameter Measurement Information

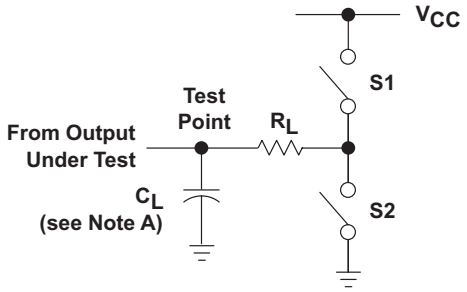

Figure 6-1. Load Circuit

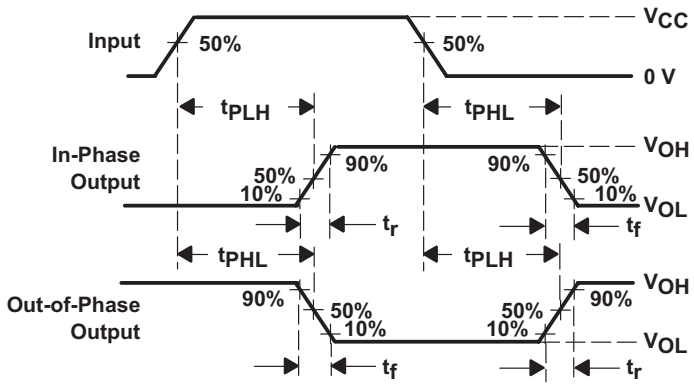

Figure 6-2. Propagation Delay and Output Transition Times

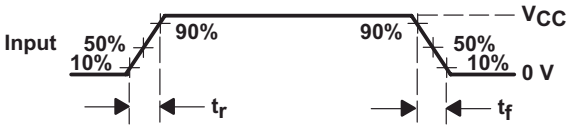

Figure 6-3. Input Rise and Fall Times

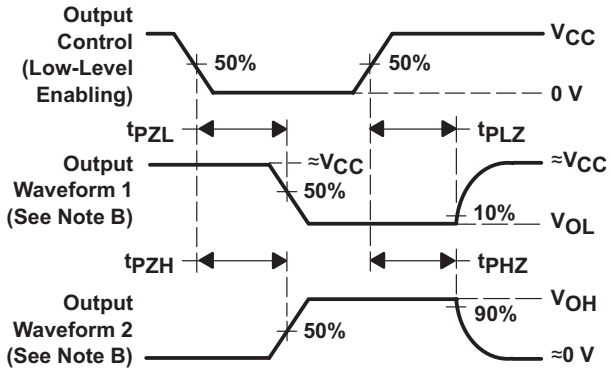

Figure 6-4. Enable and Disable Times for 3-State Outputs

Copyright © 2026 Texas Instruments Incorporated

Note

NOTE:

A. C_L includes probe and test-fixture capacitance.

B. Waveform 1 is for an output with internal conditions such that the output is low except when disabled by the output control. Waveform 2 is for an output with internal conditions such that the output is high except when disabled by the output control.

C. Phase relationships between waveforms were chosen arbitrarily. All input pulses are supplied by generators having the following characteristics: PRR ≤ 1MHz, Z_O = 50Ω, t_r = 6ns, t_f = 6ns.

D. The outputs are measured one at a time with one input transition per measurement.

E. t_{PLZ} and t_{PHZ} are the same as t_{dis}.

F. t_{PZL} and t_{PZH} are the same as t_{en}.

G. t_{PLH} and t_{PHL} are the same as t_{pd}.

Table 6-1. Switching Information Table

PARAMETER		RL	CL	S1	S2
t_{en}	t_{PZH}	1kΩ	50pF or 150pF	Open	Closed
	t_{PZL}	1kΩ	50pF or 150pF	Closed	Open
t_{dis}	t_{PHZ}	1kΩ	50pF	Open	Closed
	t_{PLZ}	1kΩ	50pF	Closed	Open
t_{pd} or t_t		—	50pF or 150pF	Open	Open

Copyright © 2026 Texas Instruments Incorporated

7 Detailed Description

7.1 Overview

The SNx4HC244 contains 8 individual high speed CMOS buffers organized as two 4-bit buffers/line drives with 3-state outputs.

Each buffer performs the boolean logic function xYn = xAn, with *x* being the bank number and *n* being the channel number.

Each output enable ($x\overline{OE}$) controls four buffers. When the $x\overline{OE}$ pin is in the low state, the outputs of all buffers in the bank x are enabled. When the $x\overline{OE}$ pin is in the high state, the outputs of all buffers in the bank x are disabled. All disabled output are placed into the high-impedance state.

To put the device in the high-impedance state during power up or power down, tie both $\overline{OE}$ pins to V_{CC} through a pull-up resistor; the minimum value of the resistor is determined by the current sinking capability of the driver and the leakage of the pin as defined in the *Electrical Characteristics* table.

7.2 Functional Block Diagram

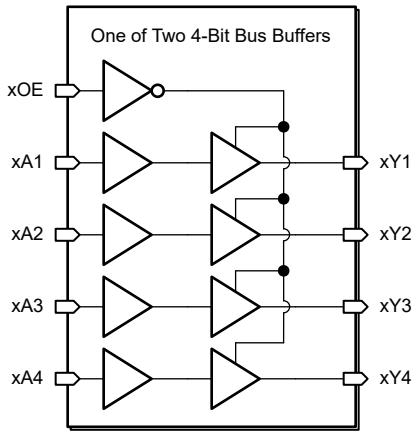

Figure 7-1. Logic Diagram (Positive Logic)

7.3 Feature Description

7.3.1 Standard CMOS Inputs

This device includes standard CMOS inputs. Standard CMOS inputs are high impedance and are typically modeled as a resistor in parallel with the input capacitance given in the *Electrical Characteristics*. The worst case resistance is calculated with the maximum input voltage, given in the *Absolute Maximum Ratings*, and the maximum input leakage current, given in the *Electrical Characteristics*, using Ohm's law (R = V ÷ I).

Standard CMOS inputs require that input signals transition between valid logic states quickly, as defined by the input transition time or rate in the *Recommended Operating Conditions* table. Failing to meet this specification will result in excessive power consumption and could cause oscillations. More details can be found in *Implications of Slow or Floating CMOS Inputs*.

Do not leave standard CMOS inputs floating at any time during operation. Unused inputs must be terminated at V_{CC} or GND. If a system will not be actively driving an input at all times, then a pull-up or pull-down resistor can be added to provide a valid input voltage during these times. The resistor value will depend on multiple factors; a 10kΩ resistor, however, is recommended and will typically meet all requirements.

7.4 Device Functional Modes

Table 7-1 lists the functional modes of the SNx4HC244.

Copyright © 2026 Texas Instruments Incorporated

Table 7-1. Function Table

INPUTS(1)		OUTPUTS
$\overline{OE}$	A	Y
L	L	L
L	H	H
H	X	Z

(1) H = High Voltage Level, L = Low Voltage Level, X = Do Not Care, Z = High-Impedance State

Copyright © 2026 Texas Instruments Incorporated

8 Application and Implementation

Note

Information in the following applications sections is not part of the TI component specification, and TI does not warrant its accuracy or completeness. TI's customers are responsible for determining suitability of components for their purposes, as well as validating and testing their design implementation to confirm system functionality.

8.1 Application Information

SN74HC244 is a high-drive CMOS device that can be used for a multitude of bus interface type applications where output drive or PCB trace length is a concern.

8.2 Typical Application

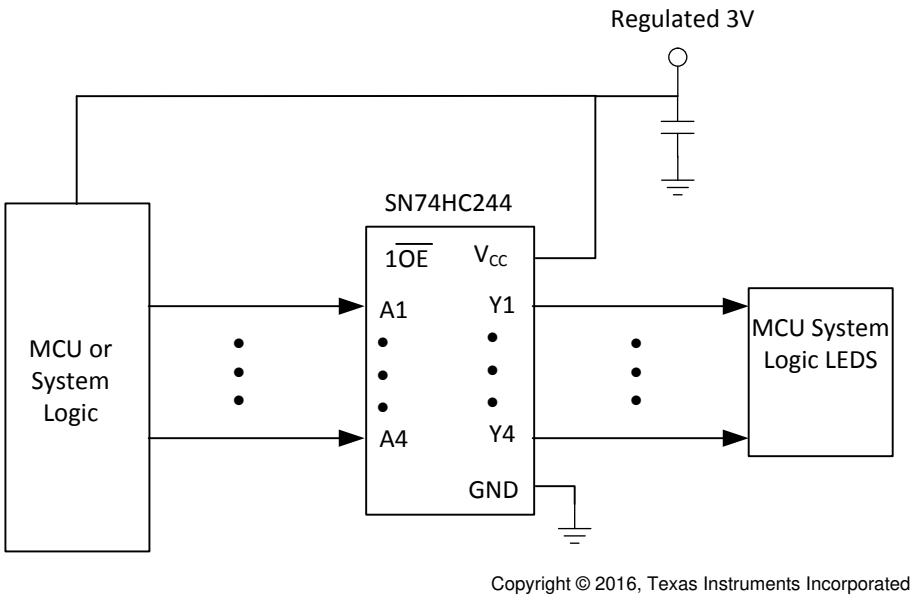

Copyright © 2016, Texas Instruments Incorporated

Figure 8-1. SN74HC244 Application Schematic

8.2.1 Design Requirements

This device uses CMOS technology and has balanced output drive. Take care to avoid bus contention because it can drive currents that would exceed maximum limits. The high drive also creates fast edges into light loads so routing and load conditions should be considered to prevent ringing.

8.2.2 Detailed Design Procedure

1. Recommended input conditions:
   - For rise time and fall time specifications, see Δt/ΔV in *Section 5.3*.
   - For specified high and low levels, see V_{IH} and V_{IL} in *Section 5.3*.
2. Recommend output conditions:
   - Load currents should not exceed I_O max per output and should not exceed the continuous current through V_{CC} or GND total current for the part. These limits are located in *Section 5.1*.
   - Outputs should not be pulled above V_{CC}.

Copyright © 2026 Texas Instruments Incorporated

8.2.3 Application Curve

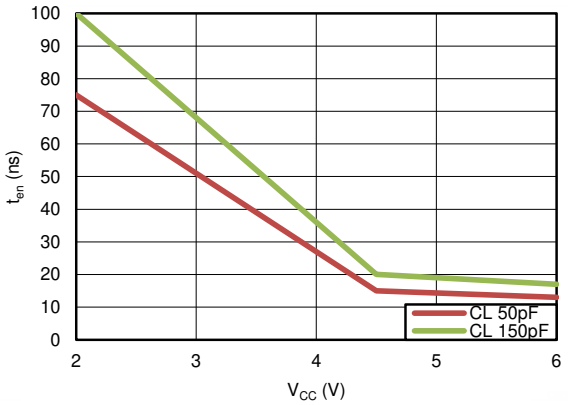

Figure 8-2. Enable Time

8.3 Power Supply Recommendations

The power supply can be any voltage between the minimum and maximum supply voltage rating located in the *Recommended Operating Conditions*. Each V_{CC} terminal should have a good bypass capacitor to prevent power disturbance.

A 0.1µF capacitor is recommended for this device. It is acceptable to parallel multiple bypass capacitors to reject different frequencies of noise. The 0.1µF and 1µF capacitors are commonly used in parallel. The bypass capacitor should be installed as close to the power terminal as possible for best results.

8.4 Layout Guidelines

- Bypass capacitor placement
  - Place near the positive supply terminal of the device
  - Provide an electrically short ground return path
  - Use wide traces to minimize impedance
  - Keep the device, capacitors, and traces on the same side of the board whenever possible
- Signal trace geometry
  - 8mil to 12mil trace width
  - Lengths less than 12cm to minimize transmission line effects
  - Avoid 90° corners for signal traces
  - Use an unbroken ground plane below signal traces
  - Flood fill areas around signal traces with ground
  - Parallel traces must be separated by at least 3x dielectric thickness
  - For traces longer than 12cm
    - Use impedance controlled traces
    - Source-terminate using a series damping resistor near the output
    - Avoid branches; buffer each signal that must branch separately

8.4.1 Layout Example

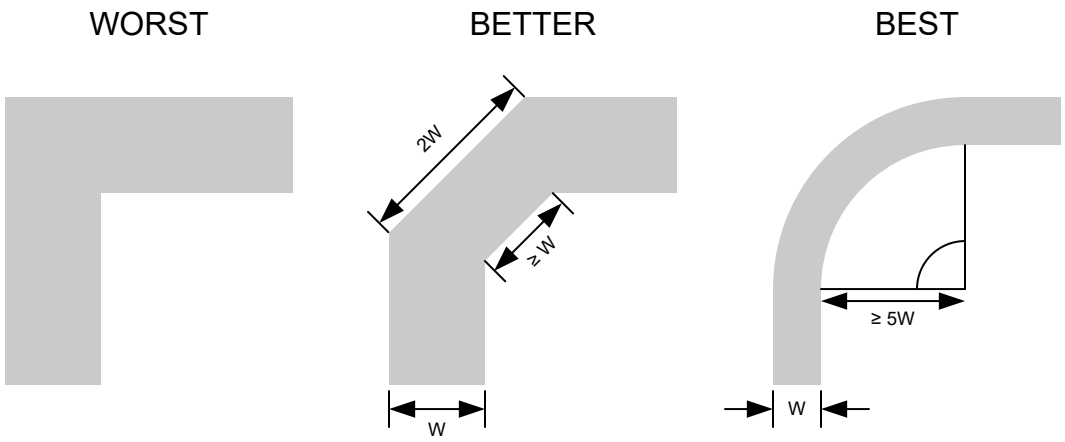

Figure 8-3. Example Trace Corners for Improved Signal Integrity

Copyright © 2026 Texas Instruments Incorporated

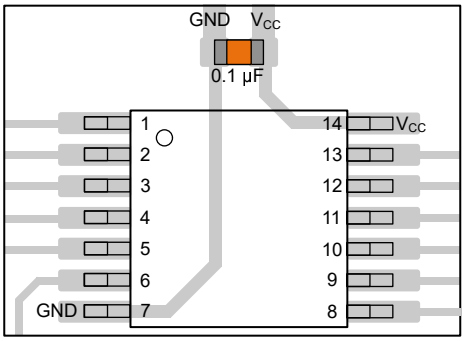

Figure 8-4. Example Bypass Capacitor Placement for TSSOP and Similar Packages

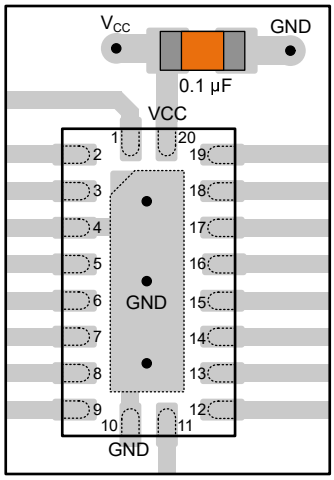

Figure 8-5. Example Bypass Capacitor Placement for WQFN and Similar Packages

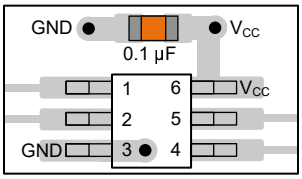

Figure 8-6. Example Bypass Capacitor Placement for SOT, SC70 and Similar Packages

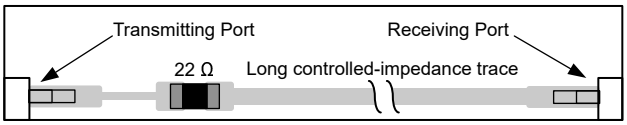

Figure 8-7. Example Damping Resistor Placement for Improved Signal Integrity

9 Device and Documentation Support

9.1 Documentation Support

9.1.1 Documentation Support

- Texas Instruments, *Implications of Slow or Floating CMOS Inputs* application note
- Texas Instruments, *Semiconductor and IC Package Thermal Metrics* application note

9.2 Receiving Notification of Documentation Updates

To receive notification of documentation updates, navigate to the device product folder on ti.com. Click on *Notifications* to register and receive a weekly digest of any product information that has changed. For change details, review the revision history included in any revised document.

9.3 Support Resources

TI E2E™ support forums are an engineer's go-to source for fast, verified answers and design help — straight from the experts. Search existing answers or ask your own question to get the quick design help you need.

Linked content is provided "AS IS" by the respective contributors. They do not constitute TI specifications and do not necessarily reflect TI's views; see TI's Terms of Use.

9.4 Trademarks

TI E2E™ is a trademark of Texas Instruments.
All trademarks are the property of their respective owners.

9.5 Electrostatic Discharge Caution



This integrated circuit can be damaged by ESD. Texas Instruments recommends that all integrated circuits be handled with appropriate precautions. Failure to observe proper handling and installation procedures can cause damage.

ESD damage can range from subtle performance degradation to complete device failure. Precision integrated circuits may be more susceptible to damage because very small parametric changes could cause the device not to meet its published specifications.

9.6 Glossary

TI Glossary	This glossary lists and explains terms, acronyms, and definitions.

10 Revision History

NOTE: Page numbers for previous revisions may differ from page numbers in the current version.

Changes from Revision H (February 2025) to Revision I (January 2026)	Page
• Updated SN74HC244 operating temperature from: 85°C to: 125°C	4

Changes from Revision G (January 2025) to Revision H (February 2025)	Page
• Updated SN74HC244 values in *Electrical Characteristics* table, *Recommended Operating Conditions* table, and *Switching Characteristics* tables	1

11 Mechanical, Packaging, and Orderable Information

The following pages include mechanical, packaging, and orderable information. This information is the most current data available for the designated devices. This data is subject to change without notice and revision of this document. For browser-based versions of this data sheet, refer to the left-hand navigation.

Copyright © 2026 Texas Instruments Incorporated

PACKAGING INFORMATION

Orderable part number	Status (1)	Material type (2)	Package | Pins	Package qty | Carrier	RoHS (3)	Lead finish/ Ball material (4)	MSL rating/ Peak reflow (5)	Op temp (°C)	Part marking (6)
5962-8409601VRA	Active	Production	CDIP (J) | 20	20 | TUBE	No	SNPB	N/A for Pkg Type	-55 to 125	5962-8409601VR A SNV54HC244J
5962-8409601VRA.A	Active	Production	CDIP (J) | 20	20 | TUBE	No	SNPB	N/A for Pkg Type	-55 to 125	5962-8409601VR A SNV54HC244J
5962-8409601VSA	Active	Production	CFP (W) | 20	25 | TUBE	No	SNPB	N/A for Pkg Type	-55 to 125	5962-8409601VS A SNV54HC244W
5962-8409601VSA.A	Active	Production	CFP (W) | 20	25 | TUBE	No	SNPB	N/A for Pkg Type	-55 to 125	5962-8409601VS A SNV54HC244W
84096012A	Active	Production	LCCC (FK) | 20	55 | TUBE	No	SNPB	N/A for Pkg Type	-55 to 125	84096012A SNJ54HC 244FK
8409601RA	Active	Production	CDIP (J) | 20	20 | TUBE	No	SNPB	N/A for Pkg Type	-55 to 125	8409601RA SNJ54HC244J
8409601SA	Active	Production	CFP (W) | 20	25 | TUBE	No	SNPB	N/A for Pkg Type	-55 to 125	8409601SA SNJ54HC244W
JM38510/65705B2A	Active	Production	LCCC (FK) | 20	55 | TUBE	No	SNPB	N/A for Pkg Type	-55 to 125	JM38510/ 65705B2A
JM38510/65705B2A.A	Active	Production	LCCC (FK) | 20	55 | TUBE	No	SNPB	N/A for Pkg Type	-55 to 125	JM38510/ 65705B2A
JM38510/65705BRA	Active	Production	CDIP (J) | 20	20 | TUBE	No	SNPB	N/A for Pkg Type	-55 to 125	JM38510/ 65705BRA
JM38510/65705BRA.A	Active	Production	CDIP (J) | 20	20 | TUBE	No	SNPB	N/A for Pkg Type	-55 to 125	JM38510/ 65705BRA
JM38510/65705BSA	Active	Production	CFP (W) | 20	25 | TUBE	No	SNPB	N/A for Pkg Type	-55 to 125	JM38510/ 65705BSA
JM38510/65705BSA.A	Active	Production	CFP (W) | 20	25 | TUBE	No	SNPB	N/A for Pkg Type	-55 to 125	JM38510/ 65705BSA
M38510/65705B2A	Active	Production	LCCC (FK) | 20	55 | TUBE	No	SNPB	N/A for Pkg Type	-55 to 125	JM38510/ 65705B2A

Orderable part number	Status (1)	Material type (2)	Package | Pins	Package qty | Carrier	RoHS (3)	Lead finish/ Ball material (4)	MSL rating/ Peak reflow (5)	Op temp (°C)	Part marking (6)
M38510/65705BRA	Active	Production	CDIP (J) | 20	20 | TUBE	No	SNPB	N/A for Pkg Type	-55 to 125	JM38510/ 65705BRA
M38510/65705BSA	Active	Production	CFP (W) | 20	25 | TUBE	No	SNPB	N/A for Pkg Type	-55 to 125	JM38510/ 65705BSA
SN54HC244J	Active	Production	CDIP (J) | 20	20 | TUBE	No	SNPB	N/A for Pkg Type	-55 to 125	SN54HC244J
SN54HC244J.A	Active	Production	CDIP (J) | 20	20 | TUBE	No	SNPB	N/A for Pkg Type	-55 to 125	SN54HC244J
SN74HC244APWR	Active	Production	TSSOP (PW) | 20	2000 | LARGE T&R	Yes	NIPDAU	Level-1-260C-UNLIM	-40 to 85	HC244A
SN74HC244APWR.A	Active	Production	TSSOP (PW) | 20	2000 | LARGE T&R	Yes	NIPDAU	Level-1-260C-UNLIM	-40 to 125	HC244A
SN74HC244DBR	Active	Production	SSOP (DB) | 20	2000 | LARGE T&R	Yes	NIPDAU	Level-1-260C-UNLIM	-40 to 85	HC244
SN74HC244DBR.A	Active	Production	SSOP (DB) | 20	2000 | LARGE T&R	Yes	NIPDAU	Level-1-260C-UNLIM	-40 to 125	HC244
SN74HC244DWR	Active	Production	SOIC (DW) | 20	2000 | LARGE T&R	Yes	NIPDAU	Level-1-260C-UNLIM	-40 to 85	HC244
SN74HC244DWR.A	Active	Production	SOIC (DW) | 20	2000 | LARGE T&R	Yes	NIPDAU	Level-1-260C-UNLIM	-40 to 125	HC244
SN74HC244DWRE4	Active	Production	SOIC (DW) | 20	2000 | LARGE T&R	Yes	NIPDAU	Level-1-260C-UNLIM	-40 to 85	HC244
SN74HC244DWRG4	Active	Production	SOIC (DW) | 20	2000 | LARGE T&R	Yes	NIPDAU	Level-1-260C-UNLIM	-40 to 85	HC244
SN74HC244DWRG4.A	Active	Production	SOIC (DW) | 20	2000 | LARGE T&R	Yes	NIPDAU	Level-1-260C-UNLIM	-40 to 125	HC244
SN74HC244N	Active	Production	PDIP (N) | 20	20 | TUBE	Yes	NIPDAU	N/A for Pkg Type	-40 to 125	SN74HC244N
SN74HC244N.A	Active	Production	PDIP (N) | 20	20 | TUBE	Yes	NIPDAU	N/A for Pkg Type	-40 to 125	SN74HC244N
SN74HC244NE4	Active	Production	PDIP (N) | 20	20 | TUBE	Yes	NIPDAU	N/A for Pkg Type	-40 to 85	SN74HC244N
SN74HC244NSR	Active	Production	SOP (NS) | 20	2000 | LARGE T&R	Yes	NIPDAU	Level-1-260C-UNLIM	-40 to 85	HC244
SN74HC244NSR.A	Active	Production	SOP (NS) | 20	2000 | LARGE T&R	Yes	NIPDAU	Level-1-260C-UNLIM	-40 to 125	HC244
SN74HC244NSRG4	Active	Production	SOP (NS) | 20	2000 | LARGE T&R	Yes	NIPDAU	Level-1-260C-UNLIM	-40 to 85	HC244
SN74HC244PW	Obsolete	Production	TSSOP (PW) | 20	-	-	Call TI	Call TI	-40 to 85	HC244
SN74HC244PWR	Active	Production	TSSOP (PW) | 20	2000 | LARGE T&R	Yes	NIPDAU	Level-1-260C-UNLIM	-40 to 85	HC244
SN74HC244PWR.A	Active	Production	TSSOP (PW) | 20	2000 | LARGE T&R	Yes	NIPDAU	Level-1-260C-UNLIM	-40 to 125	HC244
SN74HC244PWRE4	Active	Production	TSSOP (PW) | 20	2000 | LARGE T&R	Yes	NIPDAU	Level-1-260C-UNLIM	-40 to 85	HC244
SN74HC244PWRG4	Active	Production	TSSOP (PW) | 20	2000 | LARGE T&R	Yes	NIPDAU	Level-1-260C-UNLIM	-40 to 85	HC244
SN74HC244PWT	Obsolete	Production	TSSOP (PW) | 20	-	-	Call TI	Call TI	-40 to 85	HC244
SN74HC244QDWRG4Q1	NRND	Production	SOIC (DW) | 20	2000 | LARGE T&R	Yes	NIPDAU	Level-1-260C-UNLIM	-40 to 125	HC244Q
SN74HC244QDWRG4Q1.A	NRND	Production	SOIC (DW) | 20	2000 | LARGE T&R	Yes	NIPDAU	Level-1-260C-UNLIM	-40 to 125	HC244Q
SNJ54HC244FK	Active	Production	LCCC (FK) | 20	55 | TUBE	No	SNPB	N/A for Pkg Type	-55 to 125	84096012A SNJ54HC 244FK

Orderable part number	Status (1)	Material type (2)	Package | Pins	Package qty | Carrier	RoHS (3)	Lead finish/ Ball material (4)	MSL rating/ Peak reflow (5)	Op temp (°C)	Part marking (6)
SNJ54HC244FK.A	Active	Production	LCCC (FK) | 20	55 | TUBE	No	SNPB	N/A for Pkg Type	-55 to 125	84096012A SNJ54HC 244FK
SNJ54HC244J	Active	Production	CDIP (J) | 20	20 | TUBE	No	SNPB	N/A for Pkg Type	-55 to 125	8409601RA SNJ54HC244J
SNJ54HC244J.A	Active	Production	CDIP (J) | 20	20 | TUBE	No	SNPB	N/A for Pkg Type	-55 to 125	8409601RA SNJ54HC244J
SNJ54HC244W	Active	Production	CFP (W) | 20	25 | TUBE	No	SNPB	N/A for Pkg Type	-55 to 125	8409601SA SNJ54HC244W
SNJ54HC244W.A	Active	Production	CFP (W) | 20	25 | TUBE	No	SNPB	N/A for Pkg Type	-55 to 125	8409601SA SNJ54HC244W

(1) **Status:** For more details on status, see our product life cycle.

(2) **Material type:** When designated, preproduction parts are prototypes/experimental devices, and are not yet approved or released for full production. Testing and final process, including without limitation quality assurance, reliability performance testing, and/or process qualification, may not yet be complete, and this item is subject to further changes or possible discontinuation. If available for ordering, purchases will be subject to an additional waiver at checkout, and are intended for early internal evaluation purposes only. These items are sold without warranties of any kind.

(3) **RoHS values:** Yes, No, RoHS Exempt. See the TI RoHS Statement for additional information and value definition.

(4) **Lead finish/Ball material:** Parts may have multiple material finish options. Finish options are separated by a vertical ruled line. Lead finish/Ball material values may wrap to two lines if the finish value exceeds the maximum column width.

(5) **MSL rating/Peak reflow:** The moisture sensitivity level ratings and peak solder (reflow) temperatures. In the event that a part has multiple moisture sensitivity ratings, only the lowest level per JEDEC standards is shown. Refer to the shipping label for the actual reflow temperature that will be used to mount the part to the printed circuit board.

(6) **Part marking:** There may be an additional marking, which relates to the logo, the lot trace code information, or the environmental category of the part.

Multiple part markings will be inside parentheses. Only one part marking contained in parentheses and separated by a "~" will appear on a part. If a line is indented then it is a continuation of the previous line and the two combined represent the entire part marking for that device.

Important Information and Disclaimer: The information provided on this page represents TI's knowledge and belief as of the date that it is provided. TI bases its knowledge and belief on information provided by third parties, and makes no representation or warranty as to the accuracy of such information. Efforts are underway to better integrate information from third parties. TI has taken and continues to take reasonable steps to provide representative and accurate information but may not have conducted destructive testing or chemical analysis on incoming materials and chemicals. TI and TI suppliers consider certain information to be proprietary, and thus CAS numbers and other limited information may not be available for release.

In no event shall TI's liability arising out of such information exceed the total purchase price of the TI part(s) at issue in this document sold by TI to Customer on an annual basis.

OTHER QUALIFIED VERSIONS OF SN54HC244, SN54HC244-SP, SN74HC244 :

- Catalog : SN74HC244, SN54HC244
- Automotive : SN74HC244-Q1, SN74HC244-Q1
- Enhanced Product : SN74HC244-EP, SN74HC244-EP
- Military : SN54HC244
- Space : SN54HC244-SP

NOTE: Qualified Version Definitions:

- Catalog - TI's standard catalog product
- Automotive - Q100 devices qualified for high-reliability automotive applications targeting zero defects
- Enhanced Product - Supports Defense, Aerospace and Medical Applications
- Military - QML certified for Military and Defense Applications
- Space - Radiation tolerant, ceramic packaging and qualified for use in Space-based application

TAPE AND REEL INFORMATION

REEL DIMENSIONS

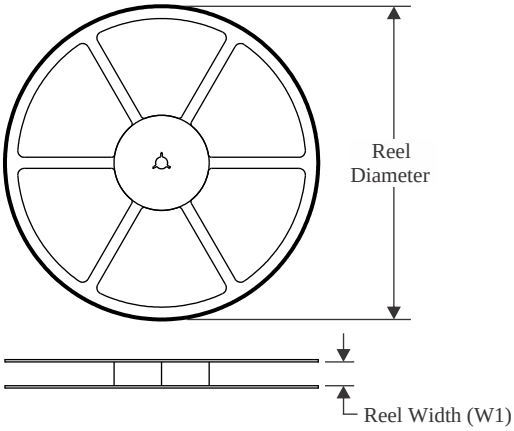

TAPE DIMENSIONS

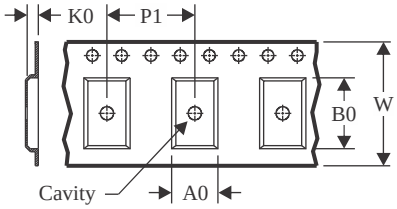

A0	Dimension designed to accommodate the component width
B0	Dimension designed to accommodate the component length
K0	Dimension designed to accommodate the component thickness
W	Overall width of the carrier tape
P1	Pitch between successive cavity centers

QUADRANT ASSIGNMENTS FOR PIN 1 ORIENTATION IN TAPE

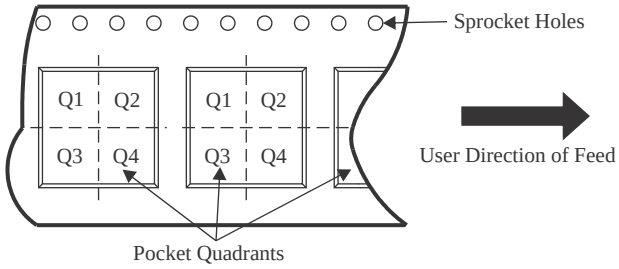

*All dimensions are nominal

Device	Package Type	Package Drawing	Pins	SPQ	Reel Diameter (mm)	Reel Width W1 (mm)	A0 (mm)	B0 (mm)	K0 (mm)	P1 (mm)	W (mm)	Pin1 Quadrant
SN74HC244APWR	TSSOP	PW	20	2000	330.0	16.4	6.95	7.0	1.4	8.0	16.0	Q1
SN74HC244DBR	SSOP	DB	20	2000	330.0	16.4	8.2	7.5	2.5	12.0	16.0	Q1
SN74HC244DWR	SOIC	DW	20	2000	330.0	24.4	10.9	13.3	2.7	12.0	24.0	Q1
SN74HC244DWR	SOIC	DW	20	2000	330.0	24.4	10.8	13.3	2.7	12.0	24.0	Q1
SN74HC244DWRG4	SOIC	DW	20	2000	330.0	24.4	10.8	13.3	2.7	12.0	24.0	Q1
SN74HC244NSR	SOP	NS	20	2000	330.0	24.4	8.4	13.0	2.5	12.0	24.0	Q1
SN74HC244PWR	TSSOP	PW	20	2000	330.0	16.4	6.95	7.0	1.4	8.0	16.0	Q1
SN74HC244QDWRG4Q1	SOIC	DW	20	2000	330.0	24.4	10.8	13.3	2.7	12.0	24.0	Q1

TAPE AND REEL BOX DIMENSIONS

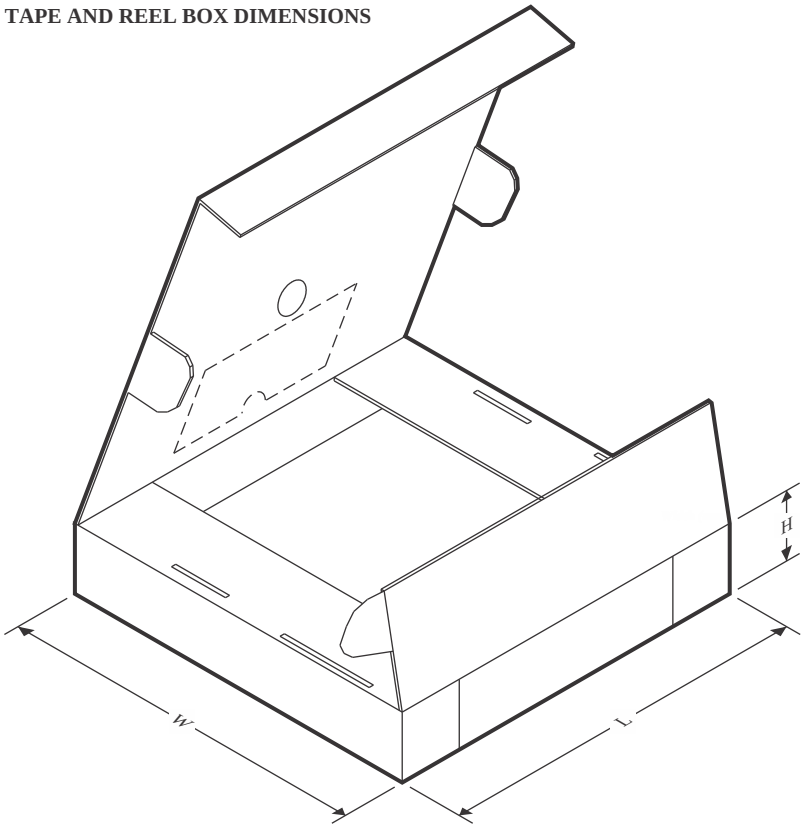

*All dimensions are nominal

Device	Package Type	Package Drawing	Pins	SPQ	Length (mm)	Width (mm)	Height (mm)
SN74HC244APWR	TSSOP	PW	20	2000	353.0	353.0	32.0
SN74HC244DBR	SSOP	DB	20	2000	353.0	353.0	32.0
SN74HC244DWR	SOIC	DW	20	2000	356.0	356.0	45.0
SN74HC244DWR	SOIC	DW	20	2000	356.0	356.0	45.0
SN74HC244DWRG4	SOIC	DW	20	2000	356.0	356.0	45.0
SN74HC244NSR	SOP	NS	20	2000	356.0	356.0	45.0
SN74HC244PWR	TSSOP	PW	20	2000	353.0	353.0	32.0
SN74HC244QDWRG4Q1	SOIC	DW	20	2000	356.0	356.0	45.0

TUBE

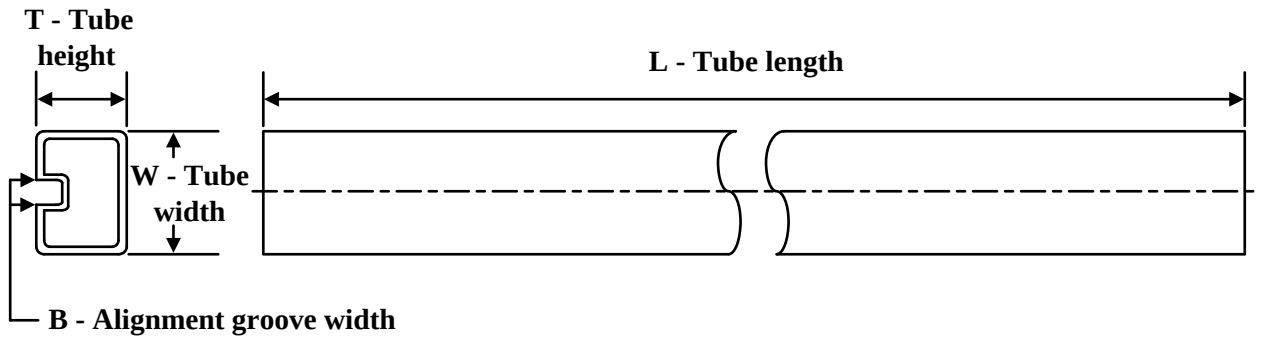

*All dimensions are nominal

Device	Package Name	Package Type	Pins	SPQ	L (mm)	W (mm)	T (µm)	B (mm)
5962-8409601VSA	W	CFP	20	25	506.98	26.16	6220	NA
5962-8409601VSA.A	W	CFP	20	25	506.98	26.16	6220	NA
84096012A	FK	LCCC	20	55	506.98	12.06	2030	NA
8409601SA	W	CFP	20	25	506.98	26.16	6220	NA
JM38510/65705B2A	FK	LCCC	20	55	506.98	12.06	2030	NA
JM38510/65705B2A.A	FK	LCCC	20	55	506.98	12.06	2030	NA
JM38510/65705BSA	W	CFP	20	25	506.98	26.16	6220	NA
JM38510/65705BSA.A	W	CFP	20	25	506.98	26.16	6220	NA
M38510/65705B2A	FK	LCCC	20	55	506.98	12.06	2030	NA
M38510/65705BSA	W	CFP	20	25	506.98	26.16	6220	NA
SN74HC244N	N	PDIP	20	20	506	13.97	11230	4.32
SN74HC244N.A	N	PDIP	20	20	506	13.97	11230	4.32
SN74HC244NE4	N	PDIP	20	20	506	13.97	11230	4.32
SNJ54HC244FK	FK	LCCC	20	55	506.98	12.06	2030	NA
SNJ54HC244FK.A	FK	LCCC	20	55	506.98	12.06	2030	NA
SNJ54HC244W	W	CFP	20	25	506.98	26.16	6220	NA
SNJ54HC244W.A	W	CFP	20	25	506.98	26.16	6220	NA

J (R–GDIP–T**)

14 LEADS SHOWN

CERAMIC DUAL IN–LINE PACKAGE

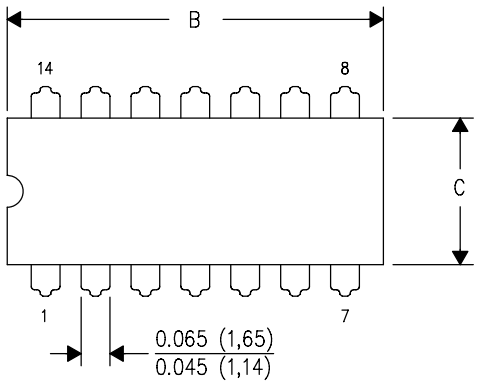

DIM \ PINS **	14	16	18	20
A	0.300 (7,62) BSC	0.300 (7,62) BSC	0.300 (7,62) BSC	0.300 (7,62) BSC
B MAX	0.785 (19,94)	.840 (21,34)	0.960 (24,38)	1.060 (26,92)
B MIN	—	—	—	—
C MAX	0.300 (7,62)	0.300 (7,62)	0.310 (7,87)	0.300 (7,62)
C MIN	0.245 (6,22)	0.245 (6,22)	0.220 (5,59)	0.245 (6,22)

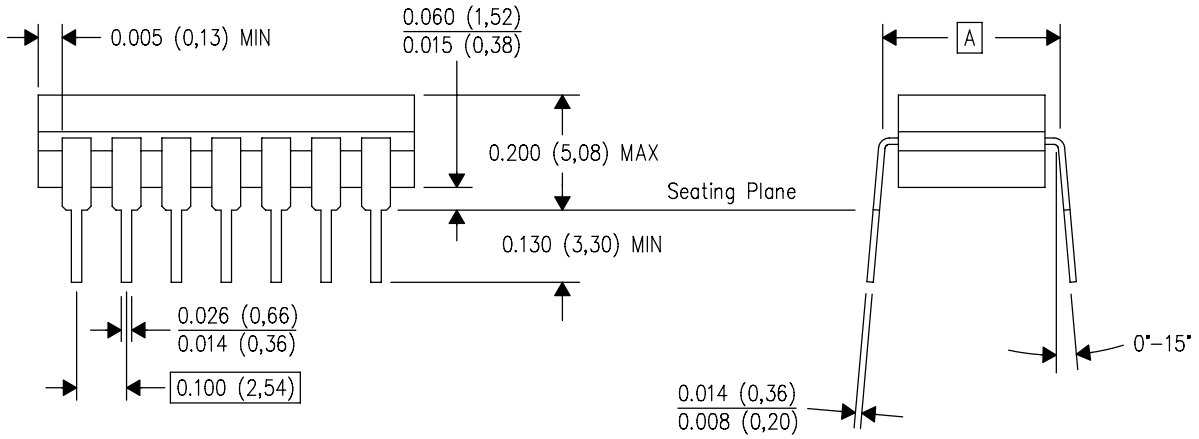

4040083/F 03/03

NOTES:
A. All linear dimensions are in inches (millimeters).
B. This drawing is subject to change without notice.
C. This package is hermetically sealed with a ceramic lid using glass frit.
D. Index point is provided on cap for terminal identification only on press ceramic glass frit seal only.
E. Falls within MIL STD 1835 GDIP1–T14, GDIP1–T16, GDIP1–T18 and GDIP1–T20.

GENERIC PACKAGE VIEW

FK 20

LCCC - 2.03 mm max height

8.89 x 8.89, 1.27 mm pitch

LEADLESS CERAMIC CHIP CARRIER

This image is a representation of the package family, actual package may vary.
Refer to the product data sheet for package details.

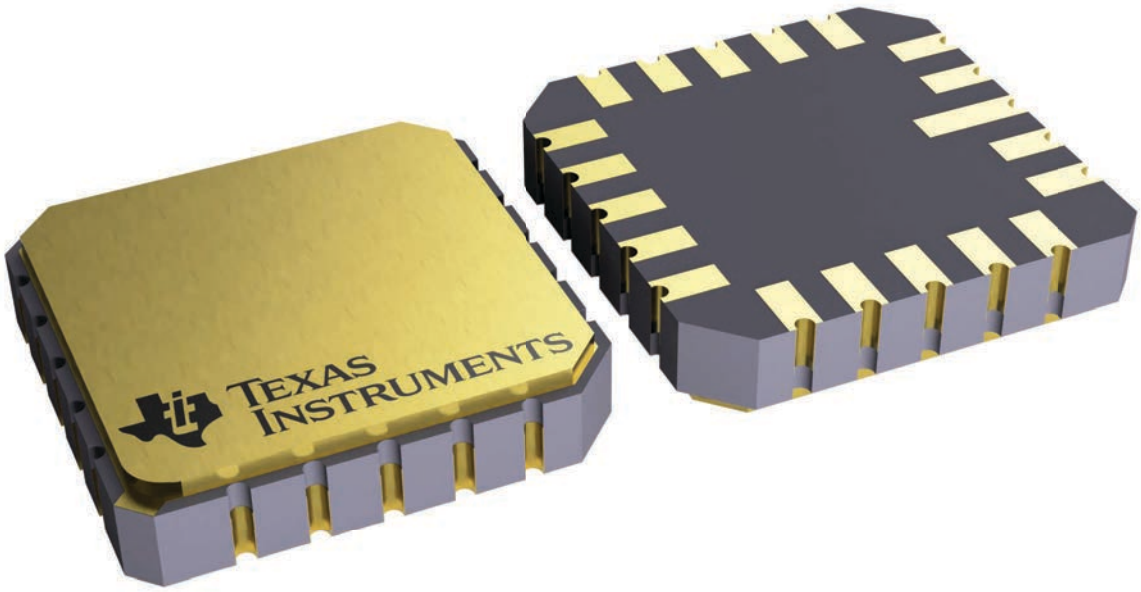

4229370VA\

N (R–PDIP–T**)

PLASTIC DUAL–IN–LINE PACKAGE

16 PINS SHOWN

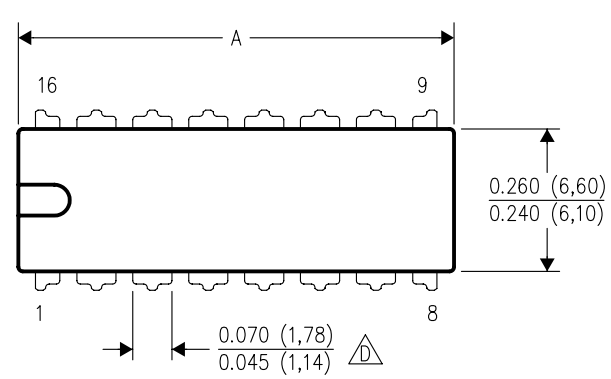

DIM \ PINS **	14	16	18	20
A MAX	0.775 (19,69)	0.775 (19,69)	0.920 (23,37)	1.060 (26,92)
A MIN	0.745 (18,92)	0.745 (18,92)	0.850 (21,59)	0.940 (23,88)
MS–001 VARIATION (C)	AA	BB	AC	AD

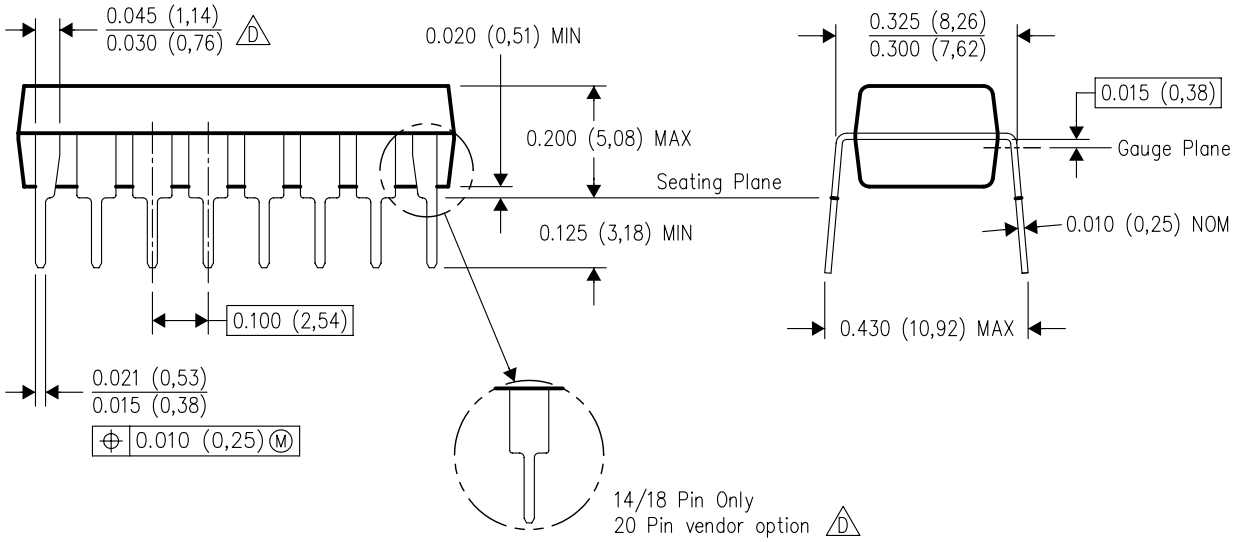

4040049/E 12/2002

NOTES:
A. All linear dimensions are in inches (millimeters).
B. This drawing is subject to change without notice.
C. Falls within JEDEC MS–001, except 18 and 20 pin minimum body length (Dim A).
D. The 20 pin end lead shoulder width is a vendor option, either half or full width.

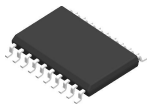

PACKAGE OUTLINE

DW0020A

SOIC - 2.65 mm max height

SOIC

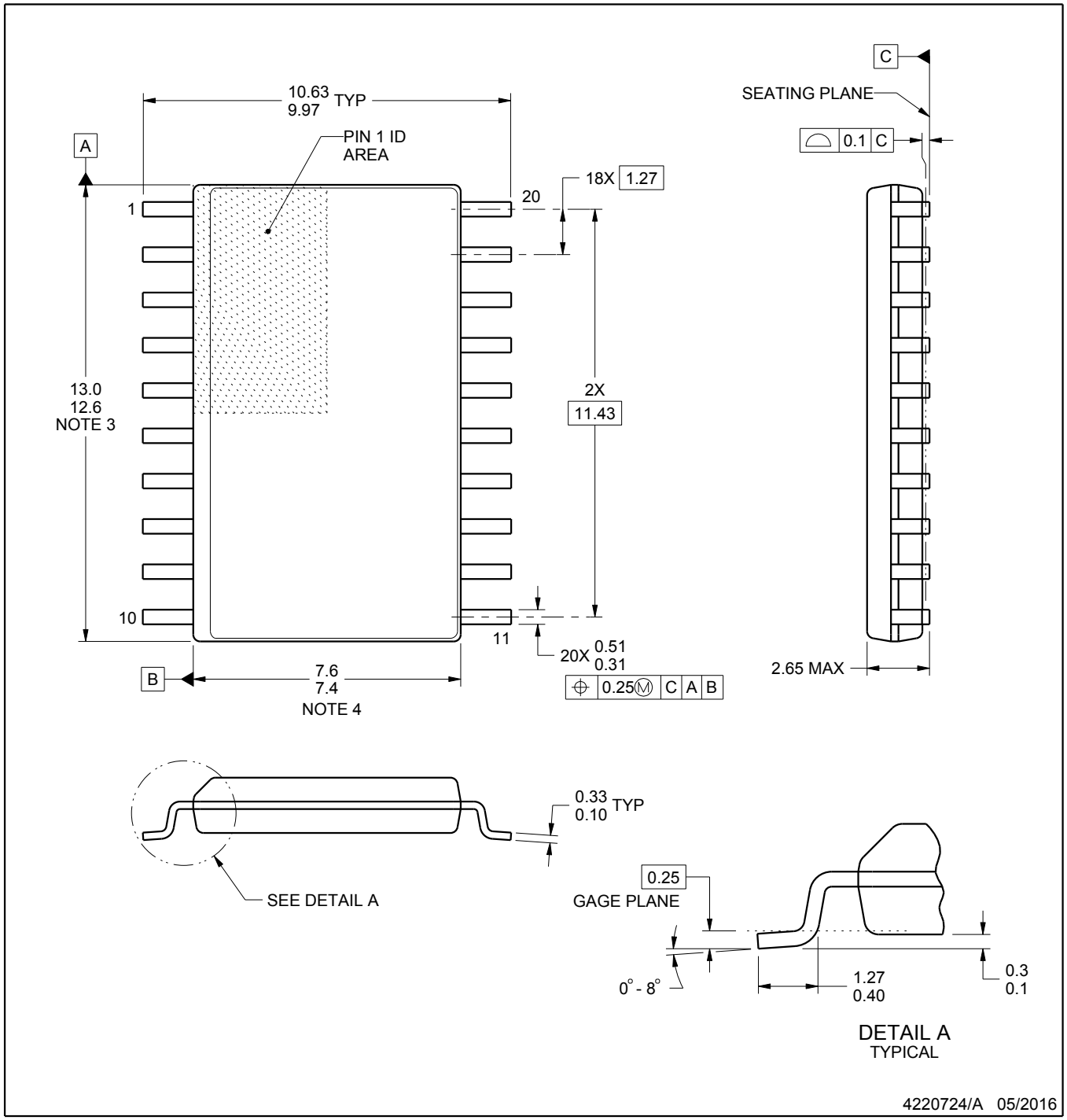

NOTES:

1. All linear dimensions are in millimeters. Dimensions in parenthesis are for reference only. Dimensioning and tolerancing per ASME Y14.5M.
2. This drawing is subject to change without notice.
3. This dimension does not include mold flash, protrusions, or gate burrs. Mold flash, protrusions, or gate burrs shall not exceed 0.15 mm per side.
4. This dimension does not include interlead flash. Interlead flash shall not exceed 0.43 mm per side.
5. Reference JEDEC registration MS-013.

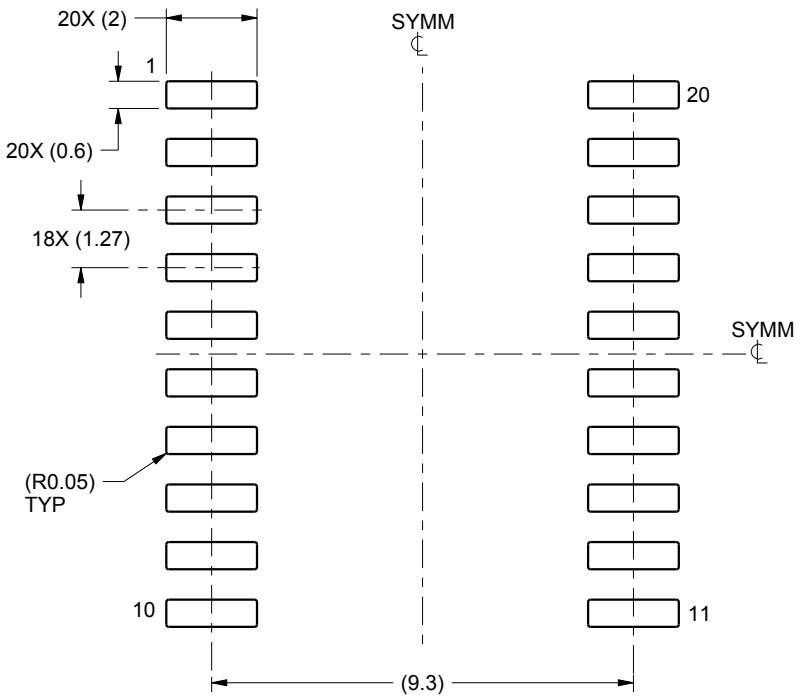

LAND PATTERN EXAMPLE
SCALE:6X

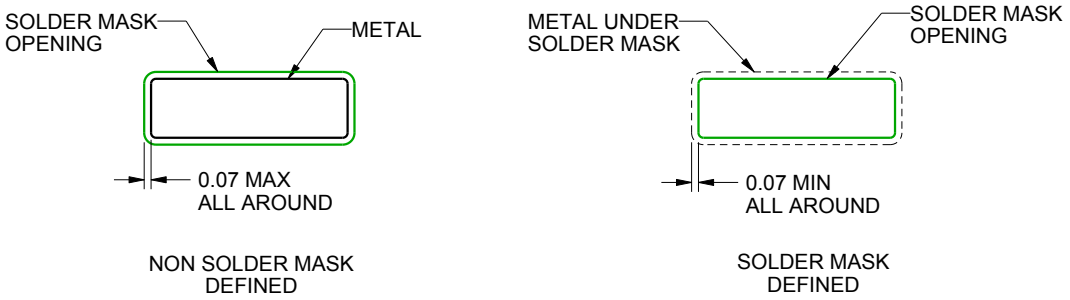

SOLDER MASK DETAILS

4220724/A 05/2016

NOTES: (continued)

6. Publication IPC-7351 may have alternate designs.
7. Solder mask tolerances between and around signal pads can vary based on board fabrication site.

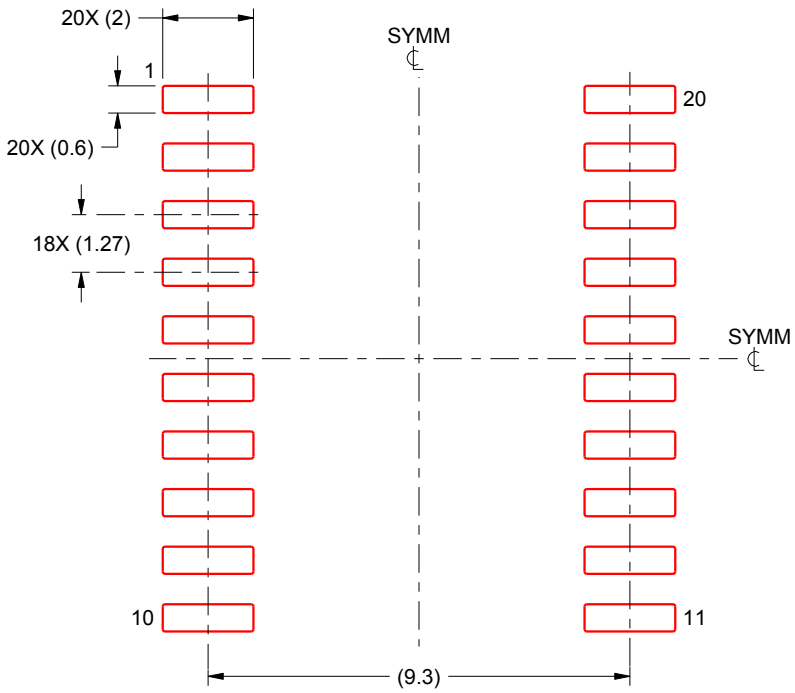

SOLDER PASTE EXAMPLE
BASED ON 0.125 mm THICK STENCIL
SCALE:6X

4220724/A 05/2016

NOTES: (continued)

8. Laser cutting apertures with trapezoidal walls and rounded corners may offer better paste release. IPC-7525 may have alternate design recommendations.
9. Board assembly site may have different recommendations for stencil design.

W (R–GDFP–F20) CERAMIC DUAL FLATPACK

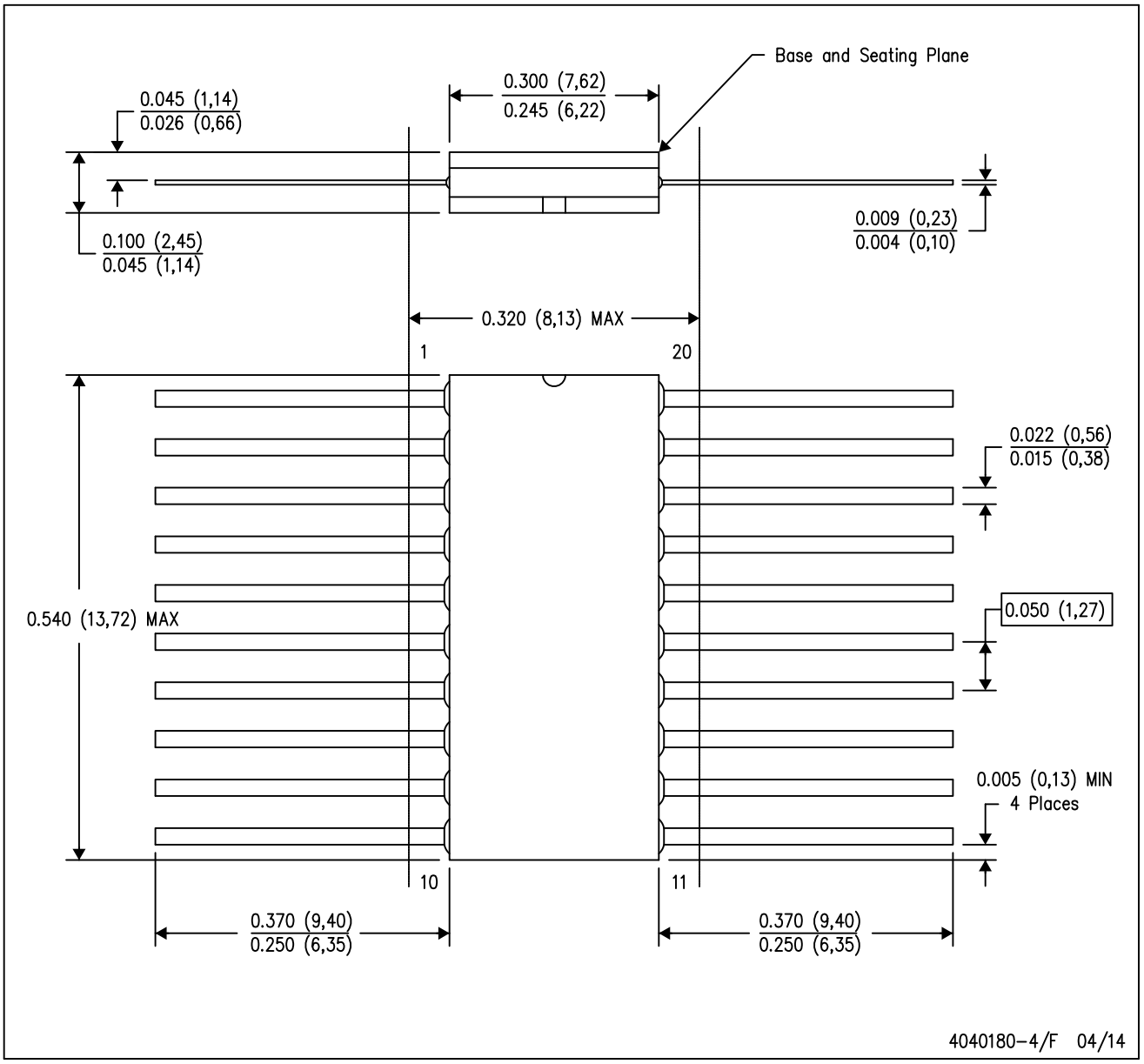

NOTES:
A. All linear dimensions are in inches (millimeters).
B. This drawing is subject to change without notice.
C. This package can be hermetically sealed with a ceramic lid using glass frit.
D. Index point is provided on cap for terminal identification only.
E. Falls within Mil–Std 1835 GDFP2–F20

PACKAGE OUTLINE

PW0020A

TSSOP - 1.2 mm max height

SMALL OUTLINE PACKAGE

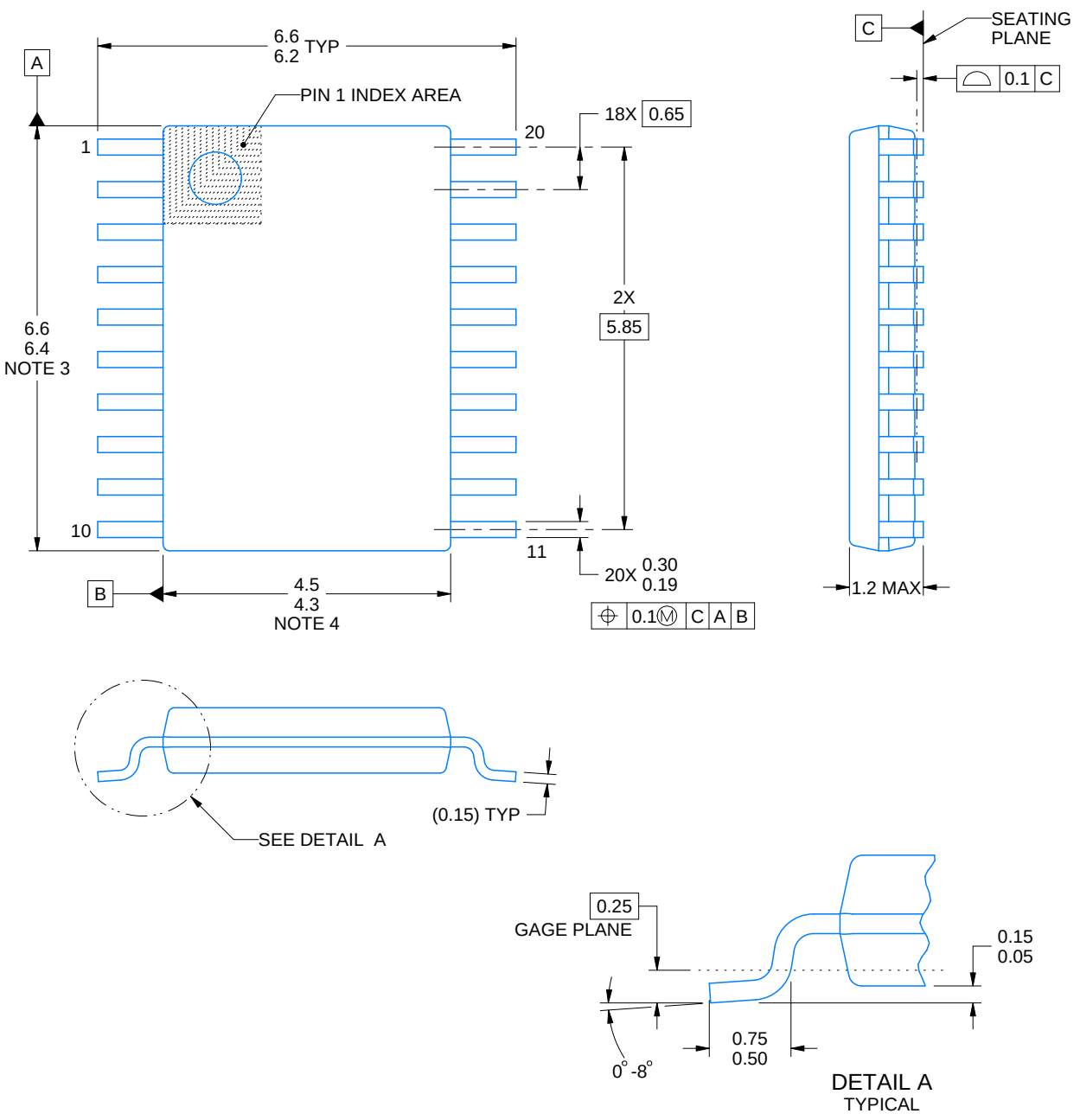

NOTES:

1. All linear dimensions are in millimeters. Any dimensions in parenthesis are for reference only. Dimensioning and tolerancing per ASME Y14.5M.
2. This drawing is subject to change without notice.
3. This dimension does not include mold flash, protrusions, or gate burrs. Mold flash, protrusions, or gate burrs shall not exceed 0.15 mm per side.
4. This dimension does not include interlead flash. Interlead flash shall not exceed 0.25 mm per side.
5. Reference JEDEC registration MO-153.

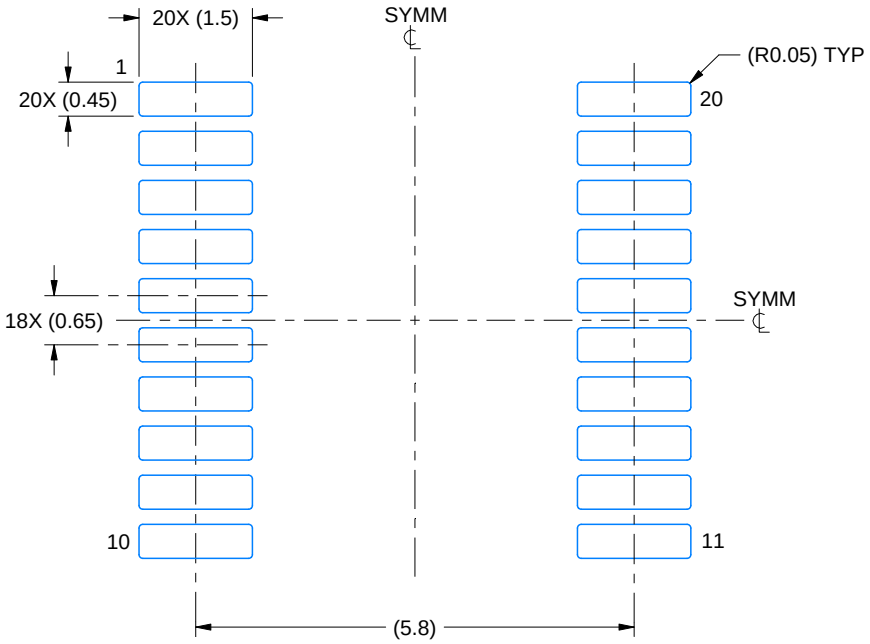

LAND PATTERN EXAMPLE
EXPOSED METAL SHOWN
SCALE: 10X



SOLDER MASK DETAILS

4220206/A 02/2017

NOTES: (continued)

6. Publication IPC-7351 may have alternate designs.
7. Solder mask tolerances between and around signal pads can vary based on board fabrication site.

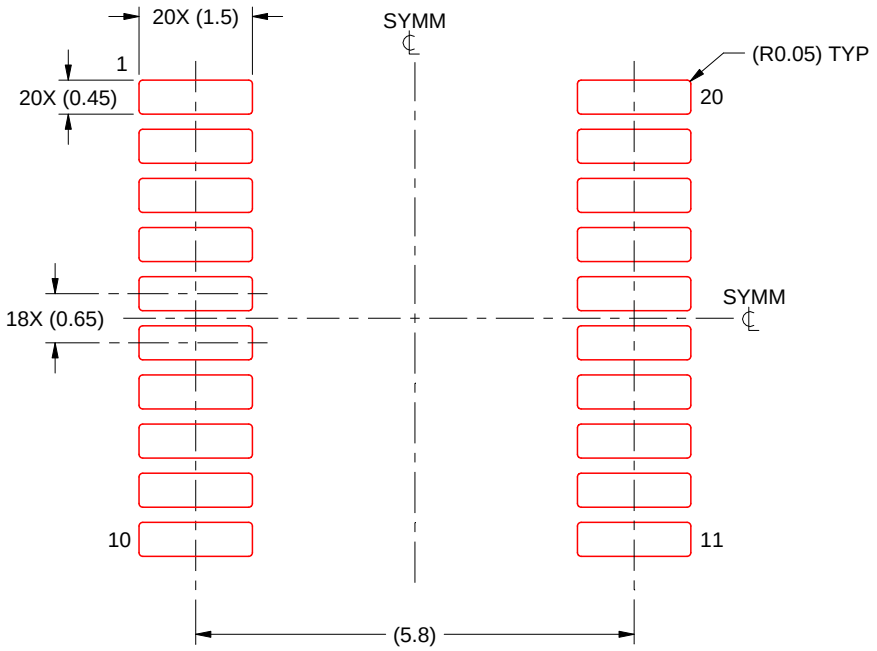

SOLDER PASTE EXAMPLE
BASED ON 0.125 mm THICK STENCIL
SCALE: 10X

4220206/A 02/2017

NOTES: (continued)

8. Laser cutting apertures with trapezoidal walls and rounded corners may offer better paste release. IPC-7525 may have alternate design recommendations.
9. Board assembly site may have different recommendations for stencil design.

PACKAGE OUTLINE

DB0020A

SSOP - 2 mm max height

SMALL OUTLINE PACKAGE

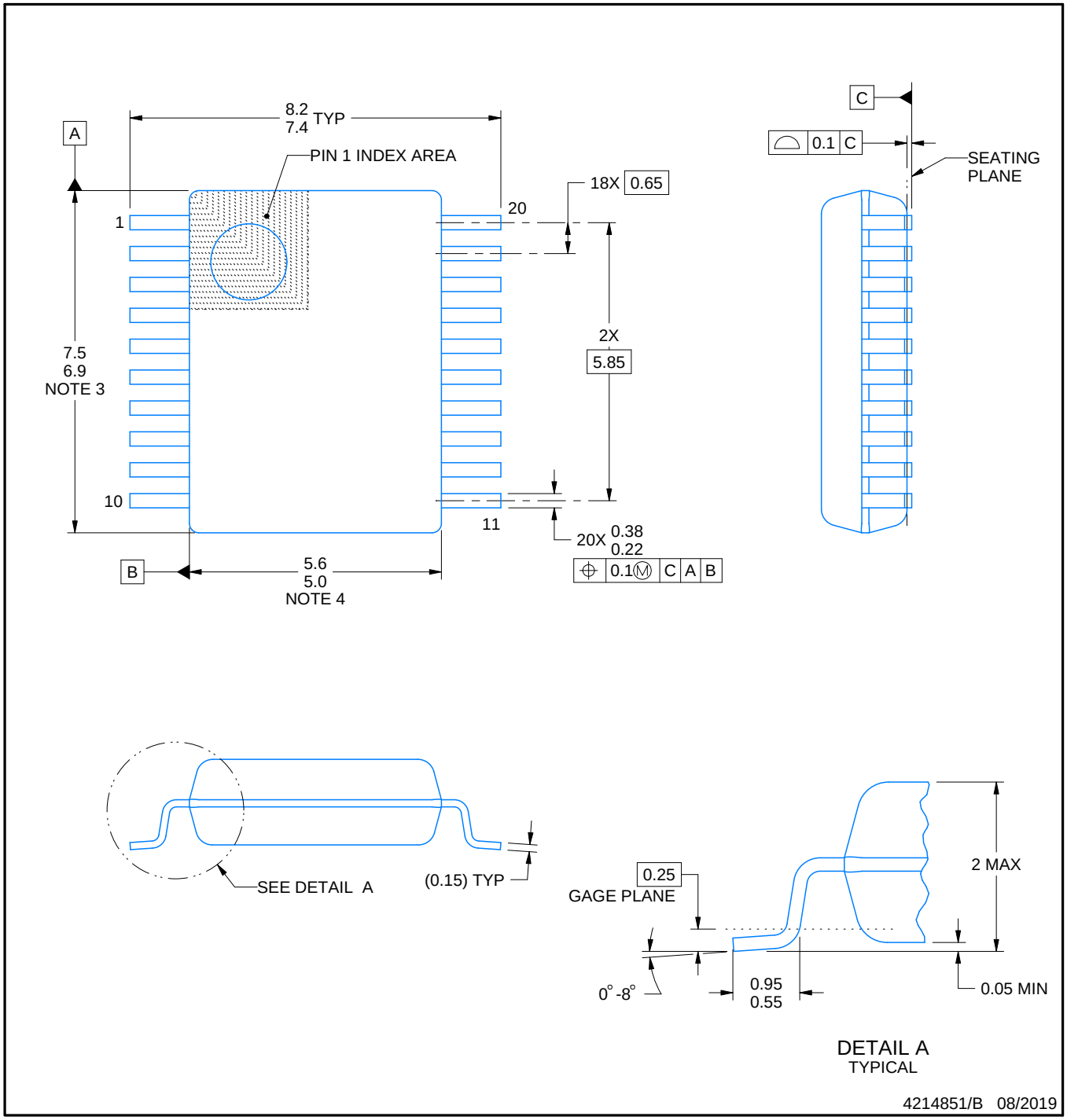

NOTES:

1. All linear dimensions are in millimeters. Any dimensions in parenthesis are for reference only. Dimensioning and tolerancing per ASME Y14.5M.
2. This drawing is subject to change without notice.
3. This dimension does not include mold flash, protrusions, or gate burrs. Mold flash, protrusions, or gate burrs shall not exceed 0.15 mm per side.
4. This dimension does not include interlead flash. Interlead flash shall not exceed 0.25 mm per side.
5. Reference JEDEC registration MO-150.

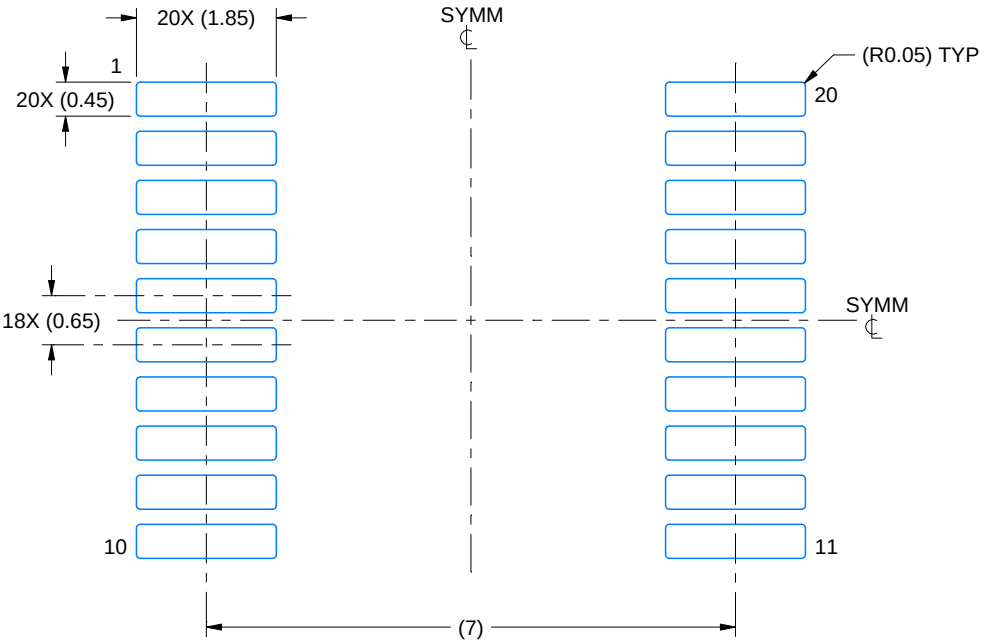

LAND PATTERN EXAMPLE
EXPOSED METAL SHOWN
SCALE: 10X

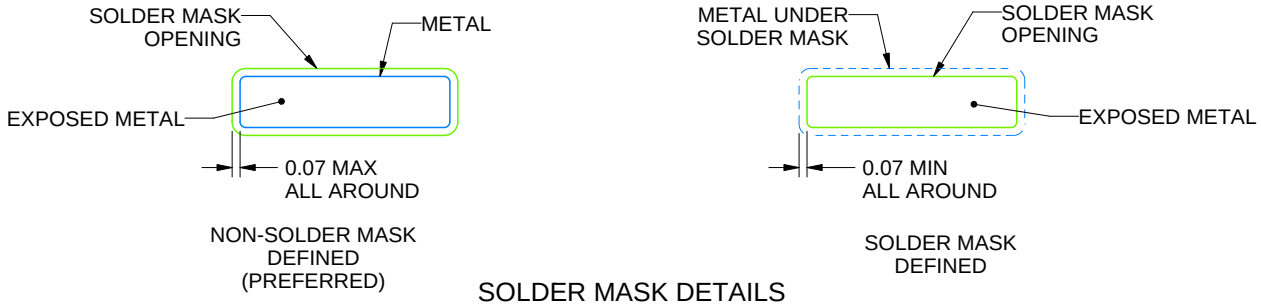

SOLDER MASK DETAILS

4214851/B 08/2019

NOTES: (continued)

6. Publication IPC-7351 may have alternate designs.
7. Solder mask tolerances between and around signal pads can vary based on board fabrication site.

EXAMPLE STENCIL DESIGN

DB0020A

SSOP - 2 mm max height

SMALL OUTLINE PACKAGE

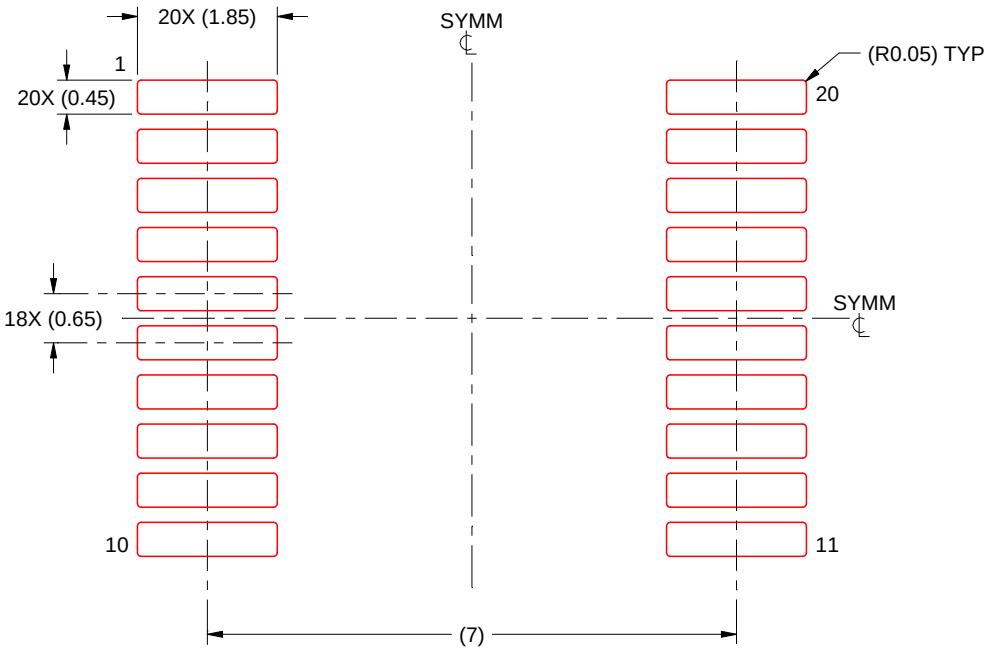

SOLDER PASTE EXAMPLE
BASED ON 0.125 mm THICK STENCIL
SCALE: 10X

4214851/B 08/2019

NOTES: (continued)

8. Laser cutting apertures with trapezoidal walls and rounded corners may offer better paste release. IPC-7525 may have alternate design recommendations.
9. Board assembly site may have different recommendations for stencil design.

MECHANICAL DATA

NS (R-PDSO-G)** **PLASTIC SMALL-OUTLINE PACKAGE**

14-PINS SHOWN

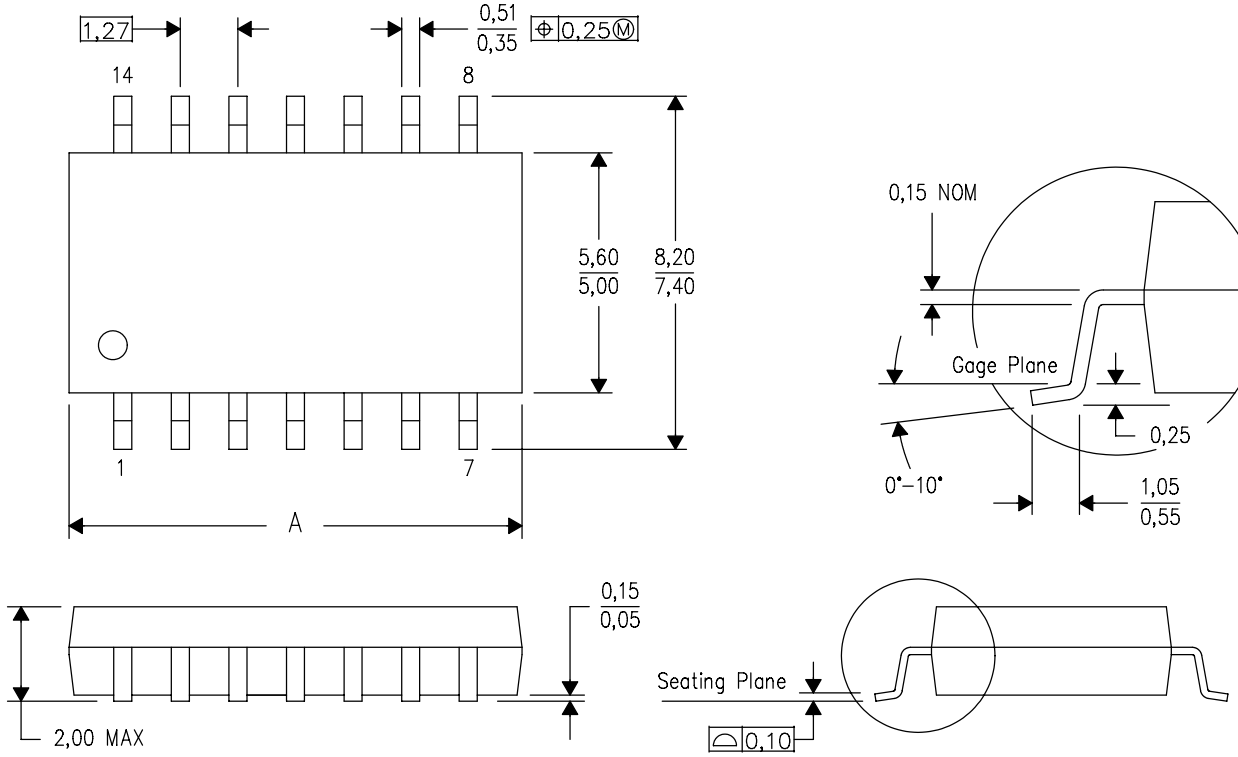

DIM \ PINS **	14	16	20	24
A MAX	10,50	10,50	12,90	15,30
A MIN	9,90	9,90	12,30	14,70

4040062/C 03/03

NOTES:
A. All linear dimensions are in millimeters.
B. This drawing is subject to change without notice.
C. Body dimensions do not include mold flash or protrusion, not to exceed 0,15.

IMPORTANT NOTICE AND DISCLAIMER

TI PROVIDES TECHNICAL AND RELIABILITY DATA (INCLUDING DATASHEETS), DESIGN RESOURCES (INCLUDING REFERENCE DESIGNS), APPLICATION OR OTHER DESIGN ADVICE, WEB TOOLS, SAFETY INFORMATION, AND OTHER RESOURCES “AS IS” AND WITH ALL FAULTS, AND DISCLAIMS ALL WARRANTIES, EXPRESS AND IMPLIED, INCLUDING WITHOUT LIMITATION ANY IMPLIED WARRANTIES OF MERCHANTABILITY, FITNESS FOR A PARTICULAR PURPOSE OR NON-INFRINGEMENT OF THIRD PARTY INTELLECTUAL PROPERTY RIGHTS.

These resources are intended for skilled developers designing with TI products. You are solely responsible for (1) selecting the appropriate TI products for your application, (2) designing, validating and testing your application, and (3) ensuring your application meets applicable standards, and any other safety, security, regulatory or other requirements.

These resources are subject to change without notice. TI grants you permission to use these resources only for development of an application that uses the TI products described in the resource. Other reproduction and display of these resources is prohibited. No license is granted to any other TI intellectual property right or to any third party intellectual property right. TI disclaims responsibility for, and you fully indemnify TI and its representatives against any claims, damages, costs, losses, and liabilities arising out of your use of these resources.

TI’s products are provided subject to TI’s Terms of Sale, TI’s General Quality Guidelines, or other applicable terms available either on ti.com or provided in conjunction with such TI products. TI’s provision of these resources does not expand or otherwise alter TI’s applicable warranties or warranty disclaimers for TI products. Unless TI explicitly designates a product as custom or customer-specified, TI products are standard, catalog, general purpose devices.

TI objects to and rejects any additional or different terms you may propose.

Copyright © 2026, Texas Instruments Incorporated

Last updated 10/2025