SDLS037

DUAL J-$\overline{K}$ POSITIVE-EDGE-TRIGGERED FLIP-FLOPS WITH PRESET AND CLEAR

DECEMBER 1983 – REVISED MARCH 1988

- **Package Options Include Plastic "Small Outline" Packages, Ceramic Chip Carriers and Flat Packages, and Plastic and Ceramic DIPs**
- **Dependable Texas Instruments Quality and Reliability**

description

These devices contain two independent J-$\overline{K}$ positive-edge-triggered flip-flops. A low level at the preset or clear inputs sets or resets the outputs regardless of the levels of the other inputs. When preset and clear are inactive (high), data at the J and $\overline{K}$ inputs meeting the setup time requirements are transferred to the outputs on the positive-going edge of the clock pulse. Clock triggering occurs at a voltage level and is not directly related to the rise time of the clock pulse. Following the hold time interval, data at the J and $\overline{K}$ inputs may be changed without affecting the levels at the outputs. These versatile flip-flops can perform as toggle flip-flops by grounding $\overline{K}$ and tying J high. They also can perform as D-type flip-flops if J and $\overline{K}$ are tied together.

The SN54109 and SN54LS109A are characterized for operation over the full military temperature range of −55°C to 125°C. The SN74109 and SN74LS109A are characterized for operation from 0°C to 70°C.

FUNCTION TABLE (each flip-flop)

INPUTS					OUTPUTS	
$\overline{PRE}$	$\overline{CLR}$	CLK	J	K	Q	$\overline{Q}$
L	H	X	X	X	H	L
H	L	X	X	X	L	H
L	L	X	X	X	H†	H†
H	H	↑	L	L	L	H
H	H	↑	H	L	TOGGLE	
H	H	↑	L	H	Q_0	$\overline{Q}_0$
H	H	↑	H	H	H	L
H	H	L	X	X	Q_0	$\overline{Q}_0$

† The output levels in this configuration are not guaranteed to meet the minimum levels for V_{OH} if the lows at preset and clear are near V_{IL} maximum. Furthermore, this configuration is nonstable; that is, it will not persist when preset or clear return to their inactive (high) level.

SN54109, SN54LS109A . . . J OR W PACKAGE
SN74109 . . . N PACKAGE
SN74LS109A . . . D OR N PACKAGE
(TOP VIEW)

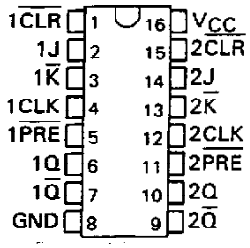

SN54LS109A . . . FK PACKAGE
(TOP VIEW)

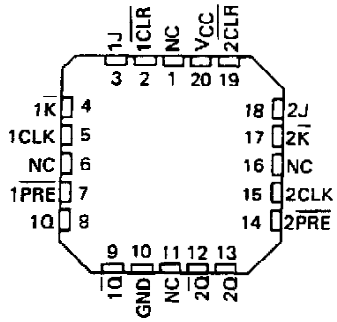

logic symbol‡

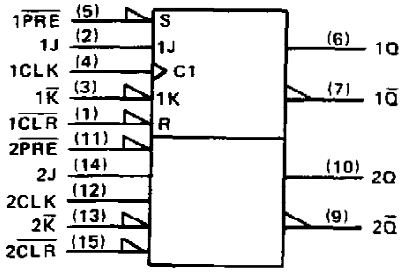

‡This symbol is in accordance with ANSI/IEEE Std 91-1984 and IEC Publication 617-12.

Pin numbers shown are for D, J, N, and W packages.

PRODUCTION DATA documents contain information current as of publication date. Products conform to specifications per the terms of Texas Instruments standard warranty. Production processing does not necessarily include testing of all parameters.

logic diagram (positive logic)

'109

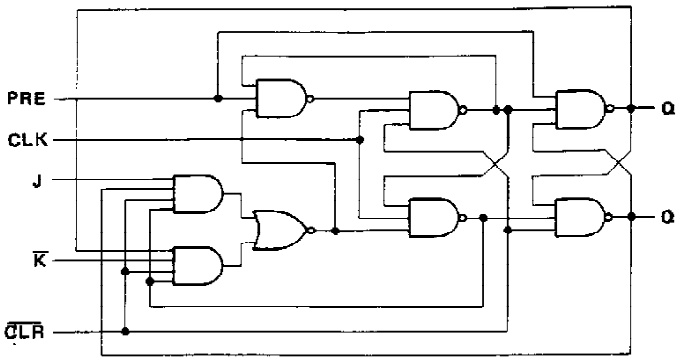

schematics of inputs and outputs

'109

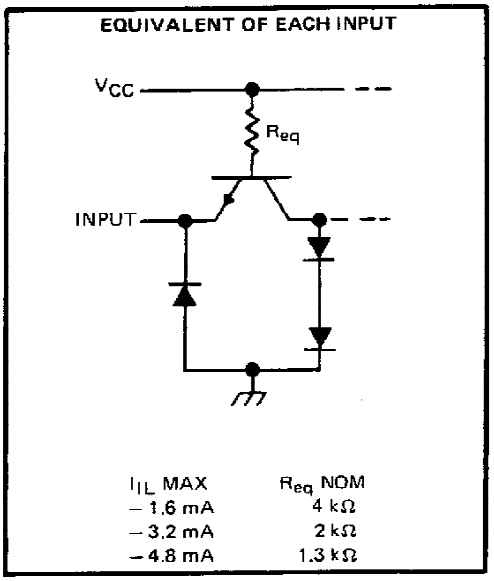

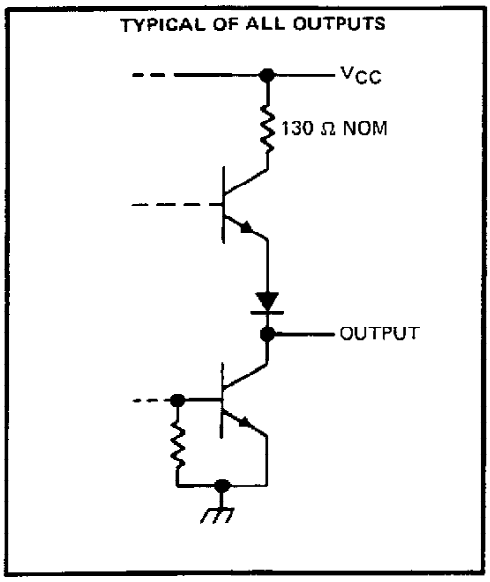

schematic

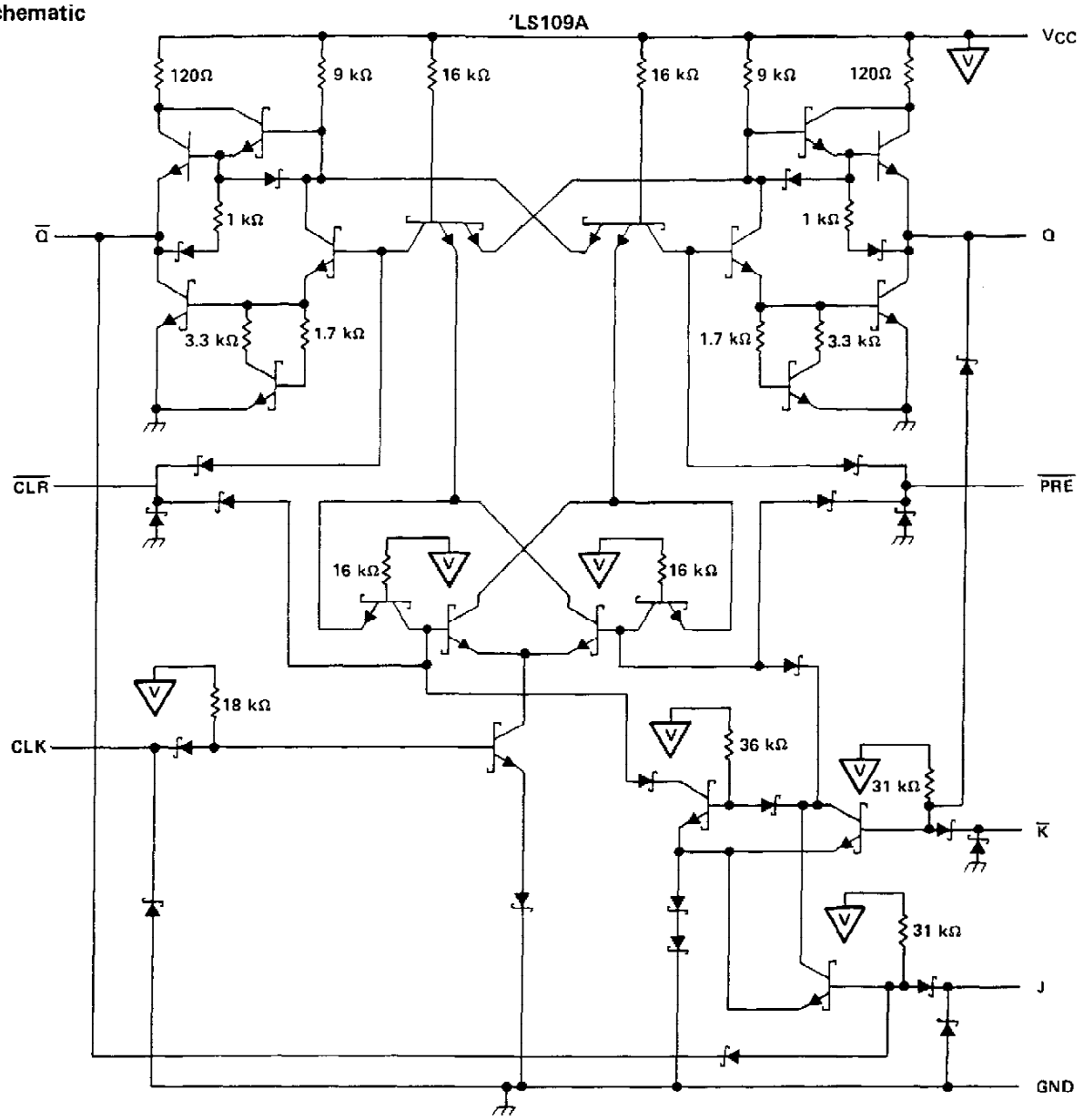

absolute maximum ratings over operating free-air temperature range (unless otherwise noted)

Supply voltage, V_{CC} (see Note 1)	7 V
Input voltage: '109	5.5 V
'LS109A	7 V
Operating free-air temperature range: SN54'	−55°C to 125°C
SN74'	0°C to 70°C
Storage temperature range	−65°C to 150°C

NOTE 1: Voltage values are with respect to network ground terminal.

recommended operating conditions

			SN54109			SN74109			UNIT
			MIN	NOM	MAX	MIN	NOM	MAX	
V_{CC}	Supply voltage		4.5	5	5.5	4.75	5	5.25	V
V_{IH}	High-level input voltage		2			2			V
V_{IL}	Low-level input voltage				0.8			0.8	V
I_{OH}	High-level output current				−0.8			−0.8	mA
I_{OL}	Low-level output current				16			16	mA
t_w	Pulse duration	CLK high or low	20			20			ns
		$\overline{PRE}$ or $\overline{CLR}$ low	20			20			
t_{su}	Input setup time before CLK↑		10			10			ns
t_h	Input hold time-data after CLK↑		6			6			ns
T_A	Operating free-air temperature		−55		125	0		70	°C

electrical characteristics over recommended operating free-air temperature range (unless otherwise noted)

PARAMETER		TEST CONDITIONS†			SN54109			SN74109			UNIT
					MIN	TYP‡	MAX	MIN	TYP‡	MAX	
V_{IK}		V_{CC} = MIN,	I_I = −12 mA				−1.5			−1.5	V
V_{OH}		V_{CC} = MIN, I_{OH} = −0.8 mA	V_{IH} = 2 V,	V_{IL} = 0.8 V,	2.4	3.4		2.4	3.4		V
V_{OL}		V_{CC} = MIN, I_{OL} = 16 mA	V_{IH} = 2 V,	V_{IL} = 0.8 V,		0.2	0.4		0.2	0.4	V
I_I		V_{CC} = MAX,	V_I = 5.5 V				1			1	mA
I_{IH}	J or $\overline{K}$	V_{CC} = MAX,	V_I = 2.4 V				40			40	μA
	$\overline{CLR}$						160			160	
	$\overline{PRE}$ or CLK						80			80	
I_{IL}	J or $\overline{K}$	V_{CC} = MAX,	V_I = 0.4 V				−1.6			−1.6	mA
	$\overline{CLR}$¶						−4.8			−4.8	
	$\overline{PRE}$¶						−3.2			−3.2	
	CLK						−3.2			−3.2	
I_{OS}§		V_{CC} = MAX			−30		−85	−30		−85	mA
I_{CC}#		V_{CC} = MAX,	See Note 2			9	15		9	15	mA

† For conditions shown as MIN or MAX, use the appropriate value specified under recommended operating conditions.
‡ All typical values are at V_{CC} = 5 V, T_A = 25°C.
§ Not more than one output should be shorted at a time.
¶ Clear is tested with preset high and preset is tested with clear high.
# Average per flip-flop.
NOTE 2: With all outputs open, I_{CC} is measured with the Q and $\overline{Q}$ outputs high in turn. At the time of measurement, the clock input is grounded.

switching characteristics, V_{CC} = 5 V, T_A = 25°C (see note 3)

PARAMETER	FROM (INPUT)	TO (OUTPUT)	TEST CONDITIONS	MIN	TYP	MAX	UNIT
f_{max}			R_L = 400 Ω, C_L = 15 pF	25	33		MHz
t_{PLH}	$\overline{PRE}$	Q			10	15	ns
t_{PHL}		$\overline{Q}$			23	35	ns
t_{PLH}	$\overline{CLR}$	$\overline{Q}$			10	15	ns
t_{PHL}		Q			17	25	ns
t_{PLH}	CLK	Q or $\overline{Q}$			10	16	ns
t_{PHL}					18	28	ns

NOTE 3: Load circuits and voltage waveforms are shown in Section 1.

recommended operating conditions

			SN54LS109A			SN74LS109A			UNIT
			MIN	NOM	MAX	MIN	NOM	MAX	
V_{CC}	Supply voltage		4.5	5	5.5	4.75	5	5.25	V
V_{IH}	High-level input voltage		2			2			V
V_{IL}	Low-level input voltage				0.7			0.8	V
I_{OH}	High-level output current				−0.4			−0.4	mA
I_{OL}	Low-level output current				4			8	mA
f_{clock}	Clock frequency		0		25	0		25	MHz
t_w	Pulse duration	CLK high	25			25			ns
		$\overline{PRE}$ or $\overline{CLR}$ low	25			25			
t_{su}	Setup time before CLK ↑	High-level data	35			35			ns
		Low-level data	25			25			
t_h	Hold time-data after CLK ↑		5			5			ns
T_A	Operating free-air temperature		−55		125	0		70	°C

electrical characteristics over recommended operating free-air temperature range (unless otherwise noted)

PARAMETER		TEST CONDITIONS†			SN54LS109A			SN74LS109A			UNIT
					MIN	TYP‡	MAX	MIN	TYP‡	MAX	
V_{IK}		V_{CC} = MIN,	I_I = −18 mA				−1.5			−1.5	V
V_{OH}		V_{CC} = MIN, I_{OH} = −0.4 mA	V_{IH} = 2 V,	V_{IL} = MAX,	2.5	3.4		2.7	3.4		V
V_{OL}		V_{CC} = MIN, I_{OL} = 4 mA	V_{IL} = MAX,	V_{IH} = 2 V,		0.25	0.4		0.25	0.4	V
		V_{CC} = MIN, I_{OL} = 8 mA	V_{IL} = MAX,	V_{IH} = 2 V,					0.35	0.5	
I_I	J, $\overline{K}$ or CLK	V_{CC} = MAX,	V_I = 7 V				0.1			0.1	mA
	$\overline{CLR}$ or $\overline{PRE}$						0.2			0.2	
I_{IH}	J, $\overline{K}$ or CLK	V_{CC} = MAX,	V_I = 2.7 V				20			20	μA
	$\overline{CLR}$ or $\overline{PRE}$						40			40	
I_{IL}	J, $\overline{K}$ or CLK	V_{CC} = MAX,	V_I = 0.4 V				−0.4			−0.4	mA
	$\overline{CLR}$ or $\overline{PRE}$						−0.8			−0.8	
I_{OS}§		V_{CC} = MAX,	See Note 4		−20		−100	−20		−100	mA
I_{CC} (Total)		V_{CC} = MAX,	See Note 2			4	8		4	8	mA

† For conditions shown as MIN or MAX, use the appropriate value specified under recommended operating conditions.
‡ All typical values are at V_{CC} = 5 V, T_A = 25°C.
§ Not more than one output should be shorted at a time, and the duration of the short circuit should not exceed one second.
NOTE 2: With all outputs open, I_{CC} is measured wtih the Q and $\overline{Q}$ outputs high in turn. At the time of measurement, the clock input is grounded.
NOTE 4: For certain devices where state commutation can be caused by shorting an output to ground, an equivalent test may be performed with V_O = 2.25 V and 2.125 V for the 54 family and the 74 family, respectively with the minimum and maximum limits reduced to one half of their stated values.

switching characteristics, V_{CC} = 5 V, T_A = 25°C (see note 3)

PARAMETER	FROM (INPUT)	TO (OUTPUT)	TEST CONDITIONS		MIN	TYP	MAX	UNIT
f_{max}			R_L = 2 kΩ,	C_L = 15 pF	25	33		MHz
t_{PLH}	$\overline{CLR}$, $\overline{PRE}$ or CLK	Q or $\overline{Q}$				13	25	ns
t_{PHL}						25	40	ns

NOTE 3: Load circuits and voltage waveforms are shown in Section 1.

PACKAGING INFORMATION

Orderable part number	Status (1)	Material type (2)	Package | Pins	Package qty | Carrier	RoHS (3)	Lead finish/ Ball material (4)	MSL rating/ Peak reflow (5)	Op temp (°C)	Part marking (6)
JM38510/30109BEA	Active	Production	CDIP (J) | 16	25 | TUBE	No	SNPB	N/A for Pkg Type	-55 to 125	JM38510/ 30109BEA
JM38510/30109BEA.A	Active	Production	CDIP (J) | 16	25 | TUBE	No	SNPB	N/A for Pkg Type	-55 to 125	JM38510/ 30109BEA
JM38510/30109BEA.A	Active	Production	CDIP (J) | 16	25 | TUBE	No	SNPB	N/A for Pkg Type	-55 to 125	JM38510/ 30109BEA
JM38510/30109BFA	Active	Production	CFP (W) | 16	25 | TUBE	No	SNPB	N/A for Pkg Type	-55 to 125	JM38510/ 30109BFA
JM38510/30109BFA	Active	Production	CFP (W) | 16	25 | TUBE	No	SNPB	N/A for Pkg Type	-55 to 125	JM38510/ 30109BFA
JM38510/30109BFA.A	Active	Production	CFP (W) | 16	25 | TUBE	No	SNPB	N/A for Pkg Type	-55 to 125	JM38510/ 30109BFA
JM38510/30109BFA.A	Active	Production	CFP (W) | 16	25 | TUBE	No	SNPB	N/A for Pkg Type	-55 to 125	JM38510/ 30109BFA
M38510/30109BEA	Active	Production	CDIP (J) | 16	25 | TUBE	No	SNPB	N/A for Pkg Type	-55 to 125	JM38510/ 30109BEA
M38510/30109BEA	Active	Production	CDIP (J) | 16	25 | TUBE	No	SNPB	N/A for Pkg Type	-55 to 125	JM38510/ 30109BEA
M38510/30109BFA	Active	Production	CFP (W) | 16	25 | TUBE	No	SNPB	N/A for Pkg Type	-55 to 125	JM38510/ 30109BFA
M38510/30109BFA	Active	Production	CFP (W) | 16	25 | TUBE	No	SNPB	N/A for Pkg Type	-55 to 125	JM38510/ 30109BFA
SN54LS109AJ	Active	Production	CDIP (J) | 16	25 | TUBE	No	SNPB	N/A for Pkg Type	-55 to 125	SN54LS109AJ
SN54LS109AJ	Active	Production	CDIP (J) | 16	25 | TUBE	No	SNPB	N/A for Pkg Type	-55 to 125	SN54LS109AJ
SN54LS109AJ.A	Active	Production	CDIP (J) | 16	25 | TUBE	No	SNPB	N/A for Pkg Type	-55 to 125	SN54LS109AJ
SN54LS109AJ.A	Active	Production	CDIP (J) | 16	25 | TUBE	No	SNPB	N/A for Pkg Type	-55 to 125	SN54LS109AJ
SN74LS109AD	Obsolete	Production	SOIC (D) | 16	-	-	Call TI	Call TI	0 to 70	LS109A
SN74LS109AD	Obsolete	Production	SOIC (D) | 16	-	-	Call TI	Call TI	0 to 70	LS109A
SN74LS109ADR	Active	Production	SOIC (D) | 16	2500 | LARGE T&R	Yes	NIPDAU	Level-1-260C-UNLIM	0 to 70	LS109A
SN74LS109ADR	Active	Production	SOIC (D) | 16	2500 | LARGE T&R	Yes	NIPDAU	Level-1-260C-UNLIM	0 to 70	LS109A
SN74LS109ADR.A	Active	Production	SOIC (D) | 16	2500 | LARGE T&R	Yes	NIPDAU	Level-1-260C-UNLIM	0 to 70	LS109A
SN74LS109ADR.A	Active	Production	SOIC (D) | 16	2500 | LARGE T&R	Yes	NIPDAU	Level-1-260C-UNLIM	0 to 70	LS109A

Orderable part number	Status (1)	Material type (2)	Package | Pins	Package qty | Carrier	RoHS (3)	Lead finish/ Ball material (4)	MSL rating/ Peak reflow (5)	Op temp (°C)	Part marking (6)
SN74LS109AN	Active	Production	PDIP (N) | 16	25 | TUBE	Yes	NIPDAU	N/A for Pkg Type	0 to 70	SN74LS109AN
SN74LS109AN	Active	Production	PDIP (N) | 16	25 | TUBE	Yes	NIPDAU	N/A for Pkg Type	0 to 70	SN74LS109AN
SN74LS109AN.A	Active	Production	PDIP (N) | 16	25 | TUBE	Yes	NIPDAU	N/A for Pkg Type	0 to 70	SN74LS109AN
SN74LS109AN.A	Active	Production	PDIP (N) | 16	25 | TUBE	Yes	NIPDAU	N/A for Pkg Type	0 to 70	SN74LS109AN
SN74LS109ANE4	Active	Production	PDIP (N) | 16	25 | TUBE	Yes	NIPDAU	N/A for Pkg Type	0 to 70	SN74LS109AN
SN74LS109ANE4	Active	Production	PDIP (N) | 16	25 | TUBE	Yes	NIPDAU	N/A for Pkg Type	0 to 70	SN74LS109AN
SN74LS109ANSR	Active	Production	SOP (NS) | 16	2000 | LARGE T&R	Yes	NIPDAU	Level-1-260C-UNLIM	0 to 70	74LS109A
SN74LS109ANSR	Active	Production	SOP (NS) | 16	2000 | LARGE T&R	Yes	NIPDAU	Level-1-260C-UNLIM	0 to 70	74LS109A
SN74LS109ANSR.A	Active	Production	SOP (NS) | 16	2000 | LARGE T&R	Yes	NIPDAU	Level-1-260C-UNLIM	0 to 70	74LS109A
SN74LS109ANSR.A	Active	Production	SOP (NS) | 16	2000 | LARGE T&R	Yes	NIPDAU	Level-1-260C-UNLIM	0 to 70	74LS109A
SNJ54LS109AJ	Active	Production	CDIP (J) | 16	25 | TUBE	No	SNPB	N/A for Pkg Type	-55 to 125	SNJ54LS109AJ
SNJ54LS109AJ	Active	Production	CDIP (J) | 16	25 | TUBE	No	SNPB	N/A for Pkg Type	-55 to 125	SNJ54LS109AJ
SNJ54LS109AJ.A	Active	Production	CDIP (J) | 16	25 | TUBE	No	SNPB	N/A for Pkg Type	-55 to 125	SNJ54LS109AJ
SNJ54LS109AJ.A	Active	Production	CDIP (J) | 16	25 | TUBE	No	SNPB	N/A for Pkg Type	-55 to 125	SNJ54LS109AJ
SNJ54LS109AW	Active	Production	CFP (W) | 16	25 | TUBE	No	SNPB	N/A for Pkg Type	-55 to 125	SNJ54LS109AW
SNJ54LS109AW	Active	Production	CFP (W) | 16	25 | TUBE	No	SNPB	N/A for Pkg Type	-55 to 125	SNJ54LS109AW
SNJ54LS109AW.A	Active	Production	CFP (W) | 16	25 | TUBE	No	SNPB	N/A for Pkg Type	-55 to 125	SNJ54LS109AW
SNJ54LS109AW.A	Active	Production	CFP (W) | 16	25 | TUBE	No	SNPB	N/A for Pkg Type	-55 to 125	SNJ54LS109AW

(1) **Status:** For more details on status, see our product life cycle.

(2) **Material type:** When designated, preproduction parts are prototypes/experimental devices, and are not yet approved or released for full production. Testing and final process, including without limitation quality assurance, reliability performance testing, and/or process qualification, may not yet be complete, and this item is subject to further changes or possible discontinuation. If available for ordering, purchases will be subject to an additional waiver at checkout, and are intended for early internal evaluation purposes only. These items are sold without warranties of any kind.

(3) **RoHS values:** Yes, No, RoHS Exempt. See the TI RoHS Statement for additional information and value definition.

(4) **Lead finish/Ball material:** Parts may have multiple material finish options. Finish options are separated by a vertical ruled line. Lead finish/Ball material values may wrap to two lines if the finish value exceeds the maximum column width.

(5) **MSL rating/Peak reflow:** The moisture sensitivity level ratings and peak solder (reflow) temperatures. In the event that a part has multiple moisture sensitivity ratings, only the lowest level per JEDEC standards is shown. Refer to the shipping label for the actual reflow temperature that will be used to mount the part to the printed circuit board.

(6) **Part marking:** There may be an additional marking, which relates to the logo, the lot trace code information, or the environmental category of the part.

Multiple part markings will be inside parentheses. Only one part marking contained in parentheses and separated by a "~" will appear on a part. If a line is indented then it is a continuation of the previous line and the two combined represent the entire part marking for that device.

Important Information and Disclaimer: The information provided on this page represents TI's knowledge and belief as of the date that it is provided. TI bases its knowledge and belief on information provided by third parties, and makes no representation or warranty as to the accuracy of such information. Efforts are underway to better integrate information from third parties. TI has taken and continues to take reasonable steps to provide representative and accurate information but may not have conducted destructive testing or chemical analysis on incoming materials and chemicals. TI and TI suppliers consider certain information to be proprietary, and thus CAS numbers and other limited information may not be available for release.

In no event shall TI's liability arising out of such information exceed the total purchase price of the TI part(s) at issue in this document sold by TI to Customer on an annual basis.

OTHER QUALIFIED VERSIONS OF SN54LS109A, SN74LS109A :

- Catalog : SN74LS109A
- Military : SN54LS109A

NOTE: Qualified Version Definitions:

- Catalog - TI's standard catalog product
- Military - QML certified for Military and Defense Applications

TAPE AND REEL INFORMATION

REEL DIMENSIONS

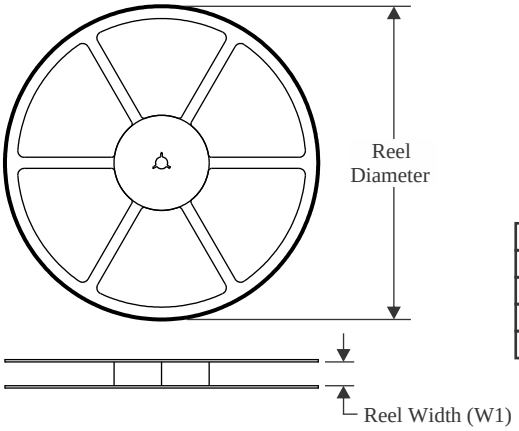

TAPE DIMENSIONS

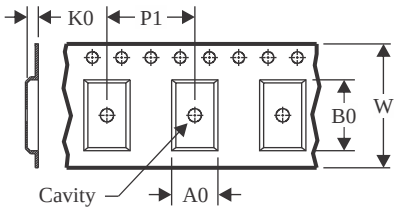

A0	Dimension designed to accommodate the component width
B0	Dimension designed to accommodate the component length
K0	Dimension designed to accommodate the component thickness
W	Overall width of the carrier tape
P1	Pitch between successive cavity centers

QUADRANT ASSIGNMENTS FOR PIN 1 ORIENTATION IN TAPE

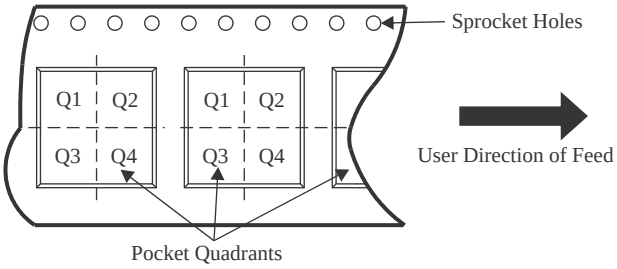

*All dimensions are nominal

Device	Package Type	Package Drawing	Pins	SPQ	Reel Diameter (mm)	Reel Width W1 (mm)	A0 (mm)	B0 (mm)	K0 (mm)	P1 (mm)	W (mm)	Pin1 Quadrant
SN74LS109ADR	SOIC	D	16	2500	330.0	16.4	6.5	10.3	2.1	8.0	16.0	Q1
SN74LS109ANSR	SOP	NS	16	2000	330.0	16.4	8.1	10.4	2.5	12.0	16.0	Q1

TAPE AND REEL BOX DIMENSIONS

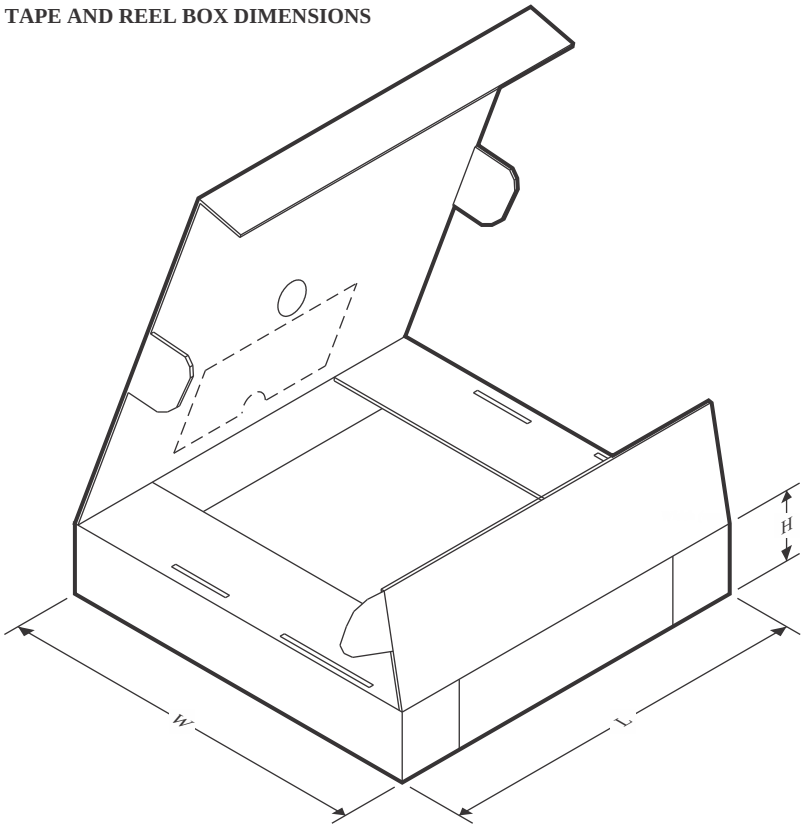

*All dimensions are nominal

Device	Package Type	Package Drawing	Pins	SPQ	Length (mm)	Width (mm)	Height (mm)
SN74LS109ADR	SOIC	D	16	2500	340.5	336.1	32.0
SN74LS109ANSR	SOP	NS	16	2000	353.0	353.0	32.0

TUBE

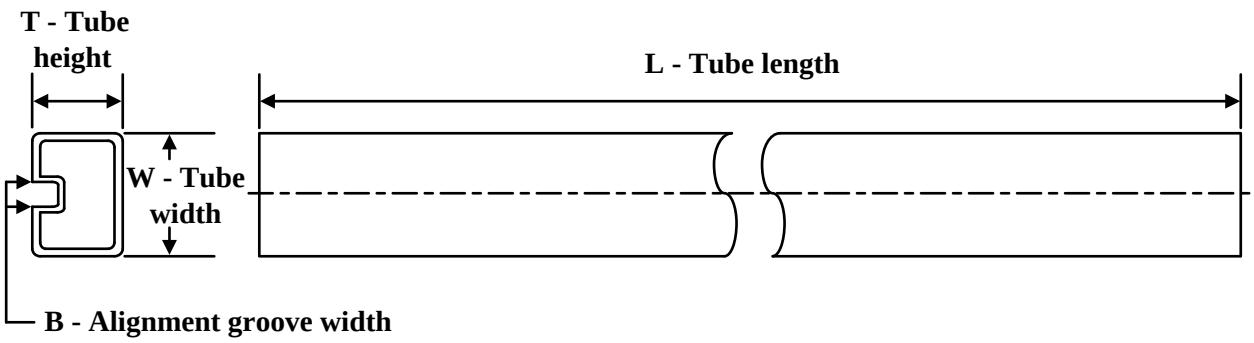

*All dimensions are nominal

Device	Package Name	Package Type	Pins	SPQ	L (mm)	W (mm)	T (µm)	B (mm)
JM38510/30109BFA	W	CFP	16	25	506.98	26.16	6220	NA
JM38510/30109BFA.A	W	CFP	16	25	506.98	26.16	6220	NA
M38510/30109BFA	W	CFP	16	25	506.98	26.16	6220	NA
SN74LS109AN	N	PDIP	16	25	506	13.97	11230	4.32
SN74LS109AN	N	PDIP	16	25	506	13.97	11230	4.32
SN74LS109AN.A	N	PDIP	16	25	506	13.97	11230	4.32
SN74LS109AN.A	N	PDIP	16	25	506	13.97	11230	4.32
SN74LS109ANE4	N	PDIP	16	25	506	13.97	11230	4.32
SN74LS109ANE4	N	PDIP	16	25	506	13.97	11230	4.32
SNJ54LS109AW	W	CFP	16	25	506.98	26.16	6220	NA
SNJ54LS109AW.A	W	CFP	16	25	506.98	26.16	6220	NA

IMPORTANT NOTICE AND DISCLAIMER

TI PROVIDES TECHNICAL AND RELIABILITY DATA (INCLUDING DATASHEETS), DESIGN RESOURCES (INCLUDING REFERENCE DESIGNS), APPLICATION OR OTHER DESIGN ADVICE, WEB TOOLS, SAFETY INFORMATION, AND OTHER RESOURCES “AS IS” AND WITH ALL FAULTS, AND DISCLAIMS ALL WARRANTIES, EXPRESS AND IMPLIED, INCLUDING WITHOUT LIMITATION ANY IMPLIED WARRANTIES OF MERCHANTABILITY, FITNESS FOR A PARTICULAR PURPOSE OR NON-INFRINGEMENT OF THIRD PARTY INTELLECTUAL PROPERTY RIGHTS.

These resources are intended for skilled developers designing with TI products. You are solely responsible for (1) selecting the appropriate TI products for your application, (2) designing, validating and testing your application, and (3) ensuring your application meets applicable standards, and any other safety, security, regulatory or other requirements.

These resources are subject to change without notice. TI grants you permission to use these resources only for development of an application that uses the TI products described in the resource. Other reproduction and display of these resources is prohibited. No license is granted to any other TI intellectual property right or to any third party intellectual property right. TI disclaims responsibility for, and you fully indemnify TI and its representatives against any claims, damages, costs, losses, and liabilities arising out of your use of these resources.

TI’s products are provided subject to TI’s Terms of Sale, TI’s General Quality Guidelines, or other applicable terms available either on ti.com or provided in conjunction with such TI products. TI’s provision of these resources does not expand or otherwise alter TI’s applicable warranties or warranty disclaimers for TI products. Unless TI explicitly designates a product as custom or customer-specified, TI products are standard, catalog, general purpose devices.

TI objects to and rejects any additional or different terms you may propose.

Copyright © 2026, Texas Instruments Incorporated

Last updated 10/2025