SN5437, SN54LS37, SN54S37, SN7437, SN74LS37, SN74S37
QUADRUPLE 2-INPUT POSITIVE-NAND BUFFERS

DECEMBER 1983—REVISED MARCH 1988

- **Package Options Include Plastic "Small Outline" Packages, Ceramic Chip Carriers and Flat Packages, and Plastic and Ceramic DIPs**
- **Dependable Texas Instruments Quality and Reliability**

description

These devices contain four independent 2-input NAND buffer gates.

The SN5437, SN54LS37 and SN54S37 are characterized for operation over the full military range of −55°C to 125°C. The SN7437, SN74LS37 and SN74S37 are characterized for operation from 0°C to 70°C.

FUNCTION TABLE (each gate)

INPUTS		OUTPUT
A	B	Y
H	H	L
L	X	H
X	L	H

logic symbol†

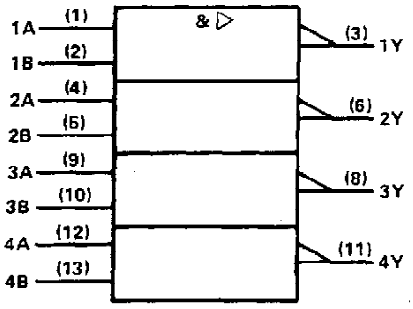

† This symbol is in accordance with ANSI/IEEE Std 91-1984 and IEC Publication 617-12.
Pin numbers shown are for D, J, N, and W packages.

SN5437, SN54LS37, SN54S37 . . . J OR W PACKAGE
SN7437 . . . N PACKAGE
SN74LS37, SN74S37 . . . D OR N PACKAGE
(TOP VIEW)

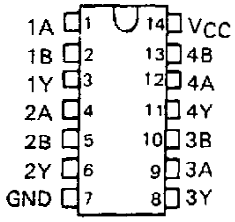

SN54LS37, SN54S37 . . . FK PACKAGE
(TOP VIEW)

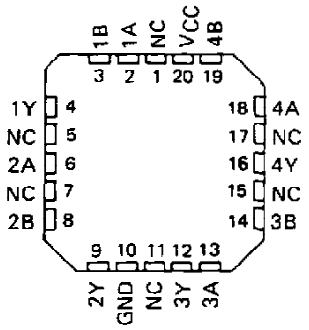

NC – No internal connection

logic diagram

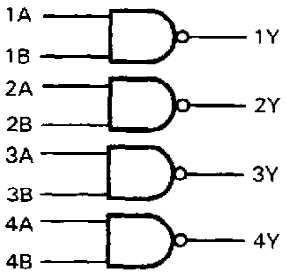

positive logic

$Y = \overline{A \cdot B}$ or $Y = \overline{A} + \overline{B}$

PRODUCTION DATA documents contain information current as of publication date. Products conform to specifications per the terms of Texas Instruments standard warranty. Production processing does not necessarily include testing of all parameters.

schematics (each gate)

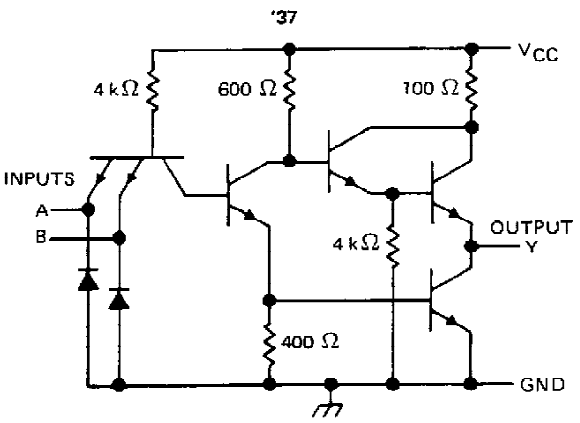

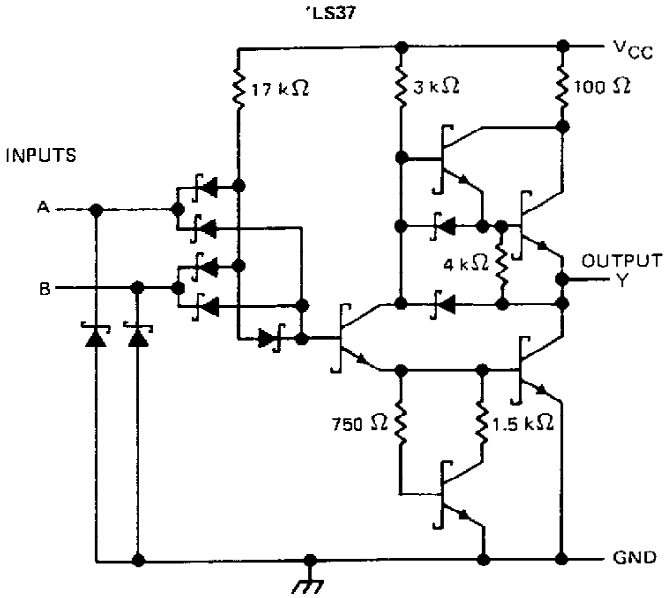

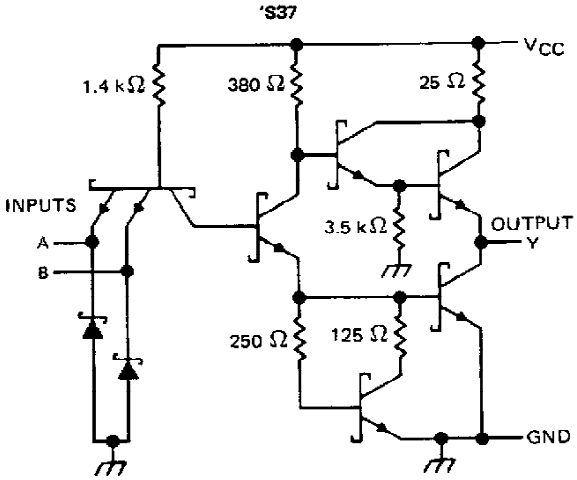

Resistor values shown are nominal.

absolute maximum ratings over operating free-air temperature range (unless otherwise noted)

Supply voltage, V_{CC} (see Note 1)		7 V
Input voltage: '37, 'S37		5.5 V
'LS37		7 V
Operating free-air temperature:	SN54'	−55°C to 125°C
	SN74'	0°C to 70°C
Storage temperature range		−65°C to 150°C

NOTE 1: Voltage values are with respect to network ground terminal.

recommended operating conditions

		SN5437			SN7437			UNIT
		MIN	NOM	MAX	MIN	NOM	MAX	
V_{CC}	Supply voltage	4.5	5	5.5	4.75	5	5.25	V
V_{IH}	High-level input voltage	2			2			V
V_{IL}	Low-level input voltage			0.8			0.8	V
I_{OH}	High-level output current			−1.2			−1.2	mA
I_{OL}	Low-level output current			48			48	mA
T_A	Operating free-air temperature	−55		125	0		70	°C

electrical characteristics over recommended operating free-air temperature range (unless otherwise noted)

PARAMETER	TEST CONDITIONS †			SN5437			SN7437			UNIT
				MIN	TYP‡	MAX	MIN	TYP‡	MAX	
V_{IK}	V_{CC} = MIN,	I_I = −12 mA				−1.5			−1.5	V
V_{OH}	V_{CC} = MIN,	V_{IL} = 0.8 V,	I_{OH} = −1.2 mA	2.4	3.3		2.4	3.3		V
V_{OL}	V_{CC} = MIN,	V_{IH} = 2 V,	I_{OL} = 48 mA		0.2	0.4		0.2	0.4	V
I_I	V_{CC} = MAX,	V_I = 5.5 V				1			1	mA
I_{IH}	V_{CC} = MAX,	V_I = 2.4 V				40			40	μA
I_{IL}	V_{CC} = MAX,	V_I = 0.4 V				−1.6			−1.6	mA
I_{OS}§	V_{CC} = MAX			−20		−70	−18		−70	mA
I_{CCH}	V_{CC} = MAX,	V_I = 0 V			9	15.5		9	15.5	mA
I_{CCL}	V_{CC} = MAX,	V_I = 4.5 V			34	54		34	54	mA

† For conditions shown as MIN or MAX, use the appropriate value specified under recommended operating conditions.
‡ All typical values are at V_{CC} = 5 V, T_A = 25°C.
§ Not more than one output should be shorted at a time, and the duration of the short circuit should not exceed one second.

switching characteristics, V_{CC} = 5 V, T_A = 25°C (see note 2)

PARAMETER	FROM (INPUT)	TO (OUTPUT)	TEST CONDITIONS		MIN	TYP	MAX	UNIT
t_{PLH}	A or B	Y	R_L = 133 Ω,	C_L = 45 pF		13	22	ns
t_{PHL}						8	15	ns

NOTE 2: Load circuits and voltage waveforms are shown in Section 1.

recommended operating conditions

		SN54LS37			SN74LS37			UNIT
		MIN	NOM	MAX	MIN	NOM	MAX	
V_{CC}	Supply voltage	4.5	5	5.5	4.75	5	5.25	V
V_{IH}	High-level input voltage	2			2			V
V_{IL}	Low-level input voltage			0.7			0.8	V
I_{OH}	High-level output current			−1.2			−1.2	mA
I_{OL}	Low-level output current			12			24	mA
T_A	Operating free-air temperature	−55		125	0		70	°C

electrical characteristics over recommended operating free-air temperature range (unless otherwise noted)

PARAMETER	TEST CONDITIONS †			SN54LS37			SN74LS37			UNIT
				MIN	TYP‡	MAX	MIN	TYP‡	MAX	
V_{IK}	V_{CC} = MIN,	I_I = −18 mA				−1.5			−1.5	V
V_{OH}	V_{CC} = MIN,	V_{IL} = MAX,	I_{OH} = −1.2 mA	2.5	3.4		2.7	3.4		V
V_{OL}	V_{CC} = MIN,	V_{IH} = 2 V,	I_{OL} = 12 mA		0.25	0.4		0.25	0.4	V
	V_{CC} = MIN,	V_{IH} = 2 V,	I_{OL} = 24 mA					0.35	0.5	
I_I	V_{CC} = MAX,	V_I = 7 V				0.1			0.1	mA
I_{IH}	V_{CC} = MAX,	V_I = 2.7 V				20			20	μA
I_{IL}	V_{CC} = MAX,	V_I = 0.4 V				−0.4			−0.4	mA
I_{OS}§	V_{CC} = MAX			−30		−130	−30		−130	mA
I_{CCH}	V_{CC} = MAX,	V_I = 0 V			0.9	2		0.9	2	mA
I_{CCL}	V_{CC} = MAX,	V_I = 4.5 V			6	12		6	12	mA

† For conditions shown as MIN or MAX, use the appropriate value specified under recommended operating conditions.
‡ All typical values are at V_{CC} = 5 V, T_A = 25°C.
§ Not more than one output should be shorted at a time, and the duration of the short-circuit should not exceed one second.

switching characteristics, V_{CC} = 5 V, T_A = 25°C (see note 2)

PARAMETER	FROM (INPUT)	TO (OUTPUT)	TEST CONDITIONS		MIN	TYP	MAX	UNIT
t_{PLH}	A or B	Y	R_L = 667 Ω,	C_L = 45 pF		12	24	ns
t_{PHL}						12	24	ns

NOTE 2: Load circuits and voltage waveforms are shown in Section 1.

recommended operating conditions

		SN54S37			SN74S37			UNIT
		MIN	NOM	MAX	MIN	NOM	MAX	
V_{CC}	Supply voltage	4.5	5	5.5	4.75	5	5.25	V
V_{IH}	High-level input voltage	2			2			V
V_{IL}	Low-level input voltage			0.8			0.8	V
I_{OH}	High-level output current			−3			−3	mA
I_{OL}	Low-level output current			60			60	mA
T_A	Operating free-air temperature	−55		125	0		70	°C

electrical characteristics over recommended operating free-air temperature range (unless otherwise noted)

PARAMETER	TEST CONDITIONS †			SN54S37			SN74S37			UNIT
				MIN	TYP ‡	MAX	MIN	TYP ‡	MAX	
V_{IK}	V_{CC} = MIN,	I_I = −18 mA				−1.2			−1.2	V
V_{OH}	V_{CC} = MIN,	V_{IL} = 0.8 V,	I_{OH} = −3 mA	2.5	3.4		2.7	3.4		V
V_{OL}	V_{CC} = MIN,	V_{IH} = 2 V,	I_{OL} = 60 mA			0.5			0.5	V
I_I	V_{CC} = MAX,	V_I = 5.5 V				1			1	mA
I_{IH}	V_{CC} = MAX,	V_I = 2.7 V				0.1			0.1	mA
I_{IL}	V_{CC} = MAX,	V_I = 0.5 V				−4			−4	mA
I_{OS} §	V_{CC} = MAX			−50		−225	−50		−225	mA
I_{CCH}	V_{CC} = MAX,	V_I = 0 V			20	36		20	36	mA
I_{CCL}	V_{CC} = MAX,	V_I = 4.5			46	80		46	80	mA

† For conditions shown as MIN or MAX, use the appropriate value specified under recommended operating conditions.
‡ All typical values are at V_{CC} = 5 V, T_A = 25°C.
§ Not more than one output should be shorted at a time, and the duration of the short circuit should not exceed 100 milliseconds.

switching characteristics, V_{CC} = 5 V, T_A = 25°C (see note 2)

PARAMETER	FROM (INPUT)	TO (OUTPUT)	TEST CONDITIONS		MIN	TYP	MAX	UNIT
t_{PLH}	A or B	Y	R_L = 93 Ω,	C_L = 50 pF		4	6.5	ns
t_{PHL}						4	6.5	ns
t_{PLH}			R_L = 93 Ω,	C_L = 150 pF		6		ns
t_{PHL}						6		ns

NOTE 2: Load circuits and voltage waveforms are shown in Section 1.

PACKAGING INFORMATION

Orderable part number	Status (1)	Material type (2)	Package | Pins	Package qty | Carrier	RoHS (3)	Lead finish/ Ball material (4)	MSL rating/ Peak reflow (5)	Op temp (°C)	Part marking (6)
5962-9754101Q2A	Active	Production	LCCC (FK) | 20	55 | TUBE	No	SNPB	N/A for Pkg Type	-55 to 125	5962-9754101Q2A SNJ54LS 37FK
5962-9754101QCA	Active	Production	CDIP (J) | 14	25 | TUBE	No	SNPB	N/A for Pkg Type	-55 to 125	5962-9754101QCA SNJ54LS37J
5962-9754101QCA	Active	Production	CDIP (J) | 14	25 | TUBE	No	SNPB	N/A for Pkg Type	-55 to 125	5962-9754101QCA SNJ54LS37J
5962-9754101QDA	Active	Production	CFP (W) | 14	25 | TUBE	No	SNPB	N/A for Pkg Type	-55 to 125	5962-9754101QDA SNJ54LS37W
5962-9754101QDA	Active	Production	CFP (W) | 14	25 | TUBE	No	SNPB	N/A for Pkg Type	-55 to 125	5962-9754101QDA SNJ54LS37W
SN54LS37J	Active	Production	CDIP (J) | 14	25 | TUBE	No	SNPB	N/A for Pkg Type	-55 to 125	SN54LS37J
SN54LS37J	Active	Production	CDIP (J) | 14	25 | TUBE	No	SNPB	N/A for Pkg Type	-55 to 125	SN54LS37J
SN54LS37J.A	Active	Production	CDIP (J) | 14	25 | TUBE	No	SNPB	N/A for Pkg Type	-55 to 125	SN54LS37J
SN54LS37J.A	Active	Production	CDIP (J) | 14	25 | TUBE	No	SNPB	N/A for Pkg Type	-55 to 125	SN54LS37J
SN54S37J	Active	Production	CDIP (J) | 14	25 | TUBE	No	SNPB	N/A for Pkg Type	-55 to 125	SN54S37J
SN54S37J	Active	Production	CDIP (J) | 14	25 | TUBE	No	SNPB	N/A for Pkg Type	-55 to 125	SN54S37J
SN54S37J.A	Active	Production	CDIP (J) | 14	25 | TUBE	No	SNPB	N/A for Pkg Type	-55 to 125	SN54S37J
SN54S37J.A	Active	Production	CDIP (J) | 14	25 | TUBE	No	SNPB	N/A for Pkg Type	-55 to 125	SN54S37J
SN74LS37N	Active	Production	PDIP (N) | 14	25 | TUBE	Yes	NIPDAU	N/A for Pkg Type	0 to 70	SN74LS37N
SN74LS37N	Active	Production	PDIP (N) | 14	25 | TUBE	Yes	NIPDAU	N/A for Pkg Type	0 to 70	SN74LS37N
SN74LS37N.A	Active	Production	PDIP (N) | 14	25 | TUBE	Yes	NIPDAU	N/A for Pkg Type	0 to 70	SN74LS37N
SN74LS37N.A	Active	Production	PDIP (N) | 14	25 | TUBE	Yes	NIPDAU	N/A for Pkg Type	0 to 70	SN74LS37N
SN74LS37NSR	Last Time Buy	Production	SOP (NS) | 14	2000 | LARGE T&R	Yes	NIPDAU	Level-1-260C-UNLIM	0 to 70	74LS37
SN74LS37NSR	Last Time Buy	Production	SOP (NS) | 14	2000 | LARGE T&R	Yes	NIPDAU	Level-1-260C-UNLIM	0 to 70	74LS37

Orderable part number	Status (1)	Material type (2)	Package | Pins	Package qty | Carrier	RoHS (3)	Lead finish/ Ball material (4)	MSL rating/ Peak reflow (5)	Op temp (°C)	Part marking (6)
SN74LS37NSR.A	Last Time Buy	Production	SOP (NS) | 14	2000 | LARGE T&R	Yes	NIPDAU	Level-1-260C-UNLIM	0 to 70	74LS37
SN74LS37NSR.A	Last Time Buy	Production	SOP (NS) | 14	2000 | LARGE T&R	Yes	NIPDAU	Level-1-260C-UNLIM	0 to 70	74LS37
SN74S37D	Active	Production	SOIC (D) | 14	50 | TUBE	Yes	NIPDAU	Level-1-260C-UNLIM	0 to 70	S37
SN74S37D	Active	Production	SOIC (D) | 14	50 | TUBE	Yes	NIPDAU	Level-1-260C-UNLIM	0 to 70	S37
SN74S37D.A	Active	Production	SOIC (D) | 14	50 | TUBE	Yes	NIPDAU	Level-1-260C-UNLIM	0 to 70	S37
SN74S37D.A	Active	Production	SOIC (D) | 14	50 | TUBE	Yes	NIPDAU	Level-1-260C-UNLIM	0 to 70	S37
SN74S37N	Active	Production	PDIP (N) | 14	25 | TUBE	Yes	NIPDAU	N/A for Pkg Type	0 to 70	SN74S37N
SN74S37N	Active	Production	PDIP (N) | 14	25 | TUBE	Yes	NIPDAU	N/A for Pkg Type	0 to 70	SN74S37N
SN74S37N.A	Active	Production	PDIP (N) | 14	25 | TUBE	Yes	NIPDAU	N/A for Pkg Type	0 to 70	SN74S37N
SN74S37N.A	Active	Production	PDIP (N) | 14	25 | TUBE	Yes	NIPDAU	N/A for Pkg Type	0 to 70	SN74S37N
SNJ54LS37FK	Active	Production	LCCC (FK) | 20	55 | TUBE	No	SNPB	N/A for Pkg Type	-55 to 125	5962-9754101Q2A SNJ54LS 37FK
SNJ54LS37FK	Active	Production	LCCC (FK) | 20	55 | TUBE	No	SNPB	N/A for Pkg Type	-55 to 125	5962-9754101Q2A SNJ54LS 37FK
SNJ54LS37FK.A	Active	Production	LCCC (FK) | 20	55 | TUBE	No	SNPB	N/A for Pkg Type	-55 to 125	5962-9754101Q2A SNJ54LS 37FK
SNJ54LS37FK.A	Active	Production	LCCC (FK) | 20	55 | TUBE	No	SNPB	N/A for Pkg Type	-55 to 125	5962-9754101Q2A SNJ54LS 37FK
SNJ54LS37J	Active	Production	CDIP (J) | 14	25 | TUBE	No	SNPB	N/A for Pkg Type	-55 to 125	5962-9754101QCA SNJ54LS37J
SNJ54LS37J	Active	Production	CDIP (J) | 14	25 | TUBE	No	SNPB	N/A for Pkg Type	-55 to 125	5962-9754101QCA SNJ54LS37J

Orderable part number	Status (1)	Material type (2)	Package | Pins	Package qty | Carrier	RoHS (3)	Lead finish/ Ball material (4)	MSL rating/ Peak reflow (5)	Op temp (°C)	Part marking (6)
SNJ54LS37J.A	Active	Production	CDIP (J) | 14	25 | TUBE	No	SNPB	N/A for Pkg Type	-55 to 125	5962-9754101QC A SNJ54LS37J
SNJ54LS37J.A	Active	Production	CDIP (J) | 14	25 | TUBE	No	SNPB	N/A for Pkg Type	-55 to 125	5962-9754101QC A SNJ54LS37J
SNJ54LS37W	Active	Production	CFP (W) | 14	25 | TUBE	No	SNPB	N/A for Pkg Type	-55 to 125	5962-9754101QD A SNJ54LS37W
SNJ54LS37W	Active	Production	CFP (W) | 14	25 | TUBE	No	SNPB	N/A for Pkg Type	-55 to 125	5962-9754101QD A SNJ54LS37W
SNJ54LS37W.A	Active	Production	CFP (W) | 14	25 | TUBE	No	SNPB	N/A for Pkg Type	-55 to 125	5962-9754101QD A SNJ54LS37W
SNJ54LS37W.A	Active	Production	CFP (W) | 14	25 | TUBE	No	SNPB	N/A for Pkg Type	-55 to 125	5962-9754101QD A SNJ54LS37W
SNJ54S37FK	Active	Production	LCCC (FK) | 20	55 | TUBE	No	SNPB	N/A for Pkg Type	-55 to 125	SNJ54S 37FK
SNJ54S37FK	Active	Production	LCCC (FK) | 20	55 | TUBE	No	SNPB	N/A for Pkg Type	-55 to 125	SNJ54S 37FK
SNJ54S37FK.A	Active	Production	LCCC (FK) | 20	55 | TUBE	No	SNPB	N/A for Pkg Type	-55 to 125	SNJ54S 37FK
SNJ54S37FK.A	Active	Production	LCCC (FK) | 20	55 | TUBE	No	SNPB	N/A for Pkg Type	-55 to 125	SNJ54S 37FK
SNJ54S37J	Active	Production	CDIP (J) | 14	25 | TUBE	No	SNPB	N/A for Pkg Type	-55 to 125	SNJ54S37J
SNJ54S37J	Active	Production	CDIP (J) | 14	25 | TUBE	No	SNPB	N/A for Pkg Type	-55 to 125	SNJ54S37J
SNJ54S37J.A	Active	Production	CDIP (J) | 14	25 | TUBE	No	SNPB	N/A for Pkg Type	-55 to 125	SNJ54S37J
SNJ54S37J.A	Active	Production	CDIP (J) | 14	25 | TUBE	No	SNPB	N/A for Pkg Type	-55 to 125	SNJ54S37J
SNJ54S37W	Active	Production	CFP (W) | 14	25 | TUBE	No	SNPB	N/A for Pkg Type	-55 to 125	SNJ54S37W
SNJ54S37W	Active	Production	CFP (W) | 14	25 | TUBE	No	SNPB	N/A for Pkg Type	-55 to 125	SNJ54S37W
SNJ54S37W.A	Active	Production	CFP (W) | 14	25 | TUBE	No	SNPB	N/A for Pkg Type	-55 to 125	SNJ54S37W
SNJ54S37W.A	Active	Production	CFP (W) | 14	25 | TUBE	No	SNPB	N/A for Pkg Type	-55 to 125	SNJ54S37W

(1) **Status:** For more details on status, see our product life cycle.

(2) **Material type:** When designated, preproduction parts are prototypes/experimental devices, and are not yet approved or released for full production. Testing and final process, including without limitation quality assurance, reliability performance testing, and/or process qualification, may not yet be complete, and this item is subject to further changes or possible discontinuation. If available for ordering, purchases will be subject to an additional waiver at checkout, and are intended for early internal evaluation purposes only. These items are sold without warranties of any kind.

(3) **RoHS values:** Yes, No, RoHS Exempt. See the TI RoHS Statement for additional information and value definition.

(4) **Lead finish/Ball material:** Parts may have multiple material finish options. Finish options are separated by a vertical ruled line. Lead finish/Ball material values may wrap to two lines if the finish value exceeds the maximum column width.

(5) **MSL rating/Peak reflow:** The moisture sensitivity level ratings and peak solder (reflow) temperatures. In the event that a part has multiple moisture sensitivity ratings, only the lowest level per JEDEC standards is shown. Refer to the shipping label for the actual reflow temperature that will be used to mount the part to the printed circuit board.

(6) **Part marking:** There may be an additional marking, which relates to the logo, the lot trace code information, or the environmental category of the part.

Multiple part markings will be inside parentheses. Only one part marking contained in parentheses and separated by a "~" will appear on a part. If a line is indented then it is a continuation of the previous line and the two combined represent the entire part marking for that device.

Important Information and Disclaimer: The information provided on this page represents TI's knowledge and belief as of the date that it is provided. TI bases its knowledge and belief on information provided by third parties, and makes no representation or warranty as to the accuracy of such information. Efforts are underway to better integrate information from third parties. TI has taken and continues to take reasonable steps to provide representative and accurate information but may not have conducted destructive testing or chemical analysis on incoming materials and chemicals. TI and TI suppliers consider certain information to be proprietary, and thus CAS numbers and other limited information may not be available for release.

In no event shall TI's liability arising out of such information exceed the total purchase price of the TI part(s) at issue in this document sold by TI to Customer on an annual basis.

OTHER QUALIFIED VERSIONS OF SN54LS37, SN54S37, SN74LS37, SN74S37 :

- Catalog : SN74LS37, SN74S37
- Military : SN54LS37, SN54S37

NOTE: Qualified Version Definitions:

- Catalog - TI's standard catalog product
- Military - QML certified for Military and Defense Applications

TAPE AND REEL INFORMATION

REEL DIMENSIONS

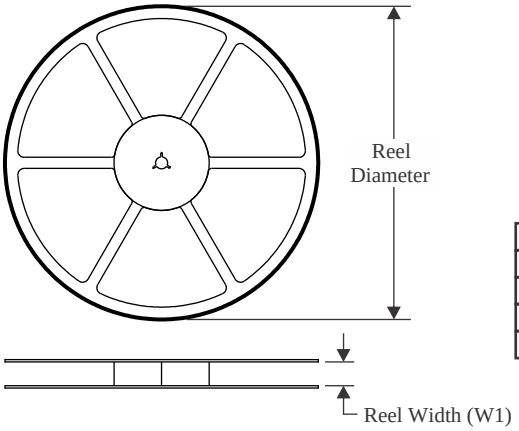

TAPE DIMENSIONS

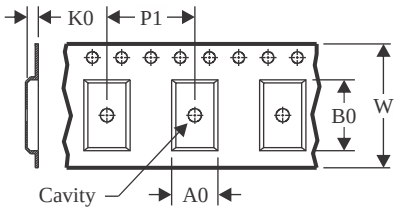

A0	Dimension designed to accommodate the component width
B0	Dimension designed to accommodate the component length
K0	Dimension designed to accommodate the component thickness
W	Overall width of the carrier tape
P1	Pitch between successive cavity centers

QUADRANT ASSIGNMENTS FOR PIN 1 ORIENTATION IN TAPE

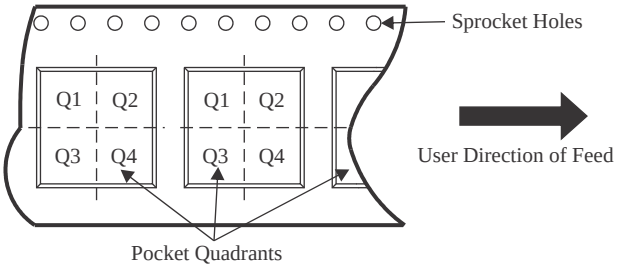

*All dimensions are nominal

Device	Package Type	Package Drawing	Pins	SPQ	Reel Diameter (mm)	Reel Width W1 (mm)	A0 (mm)	B0 (mm)	K0 (mm)	P1 (mm)	W (mm)	Pin1 Quadrant
SN74LS37NSR	SOP	NS	14	2000	330.0	16.4	8.1	10.4	2.5	12.0	16.0	Q1

TAPE AND REEL BOX DIMENSIONS

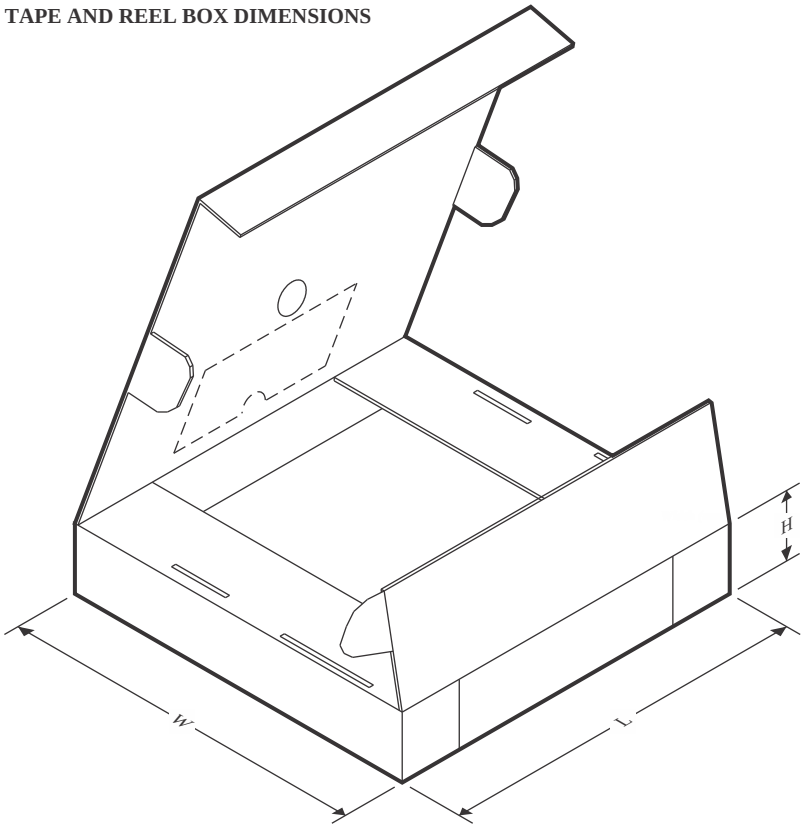

*All dimensions are nominal

Device	Package Type	Package Drawing	Pins	SPQ	Length (mm)	Width (mm)	Height (mm)
SN74LS37NSR	SOP	NS	14	2000	353.0	353.0	32.0

TUBE

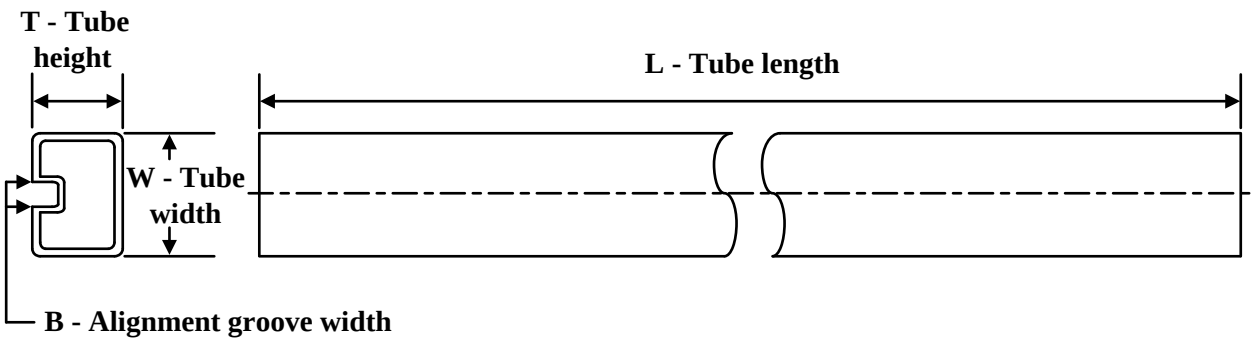

*All dimensions are nominal

Device	Package Name	Package Type	Pins	SPQ	L (mm)	W (mm)	T (µm)	B (mm)
5962-9754101Q2A	FK	LCCC	20	55	506.98	12.06	2030	NA
5962-9754101QDA	W	CFP	14	25	506.98	26.16	6220	NA
SN74LS37N	N	PDIP	14	25	506	13.97	11230	4.32
SN74LS37N	N	PDIP	14	25	506	13.97	11230	4.32
SN74LS37N.A	N	PDIP	14	25	506	13.97	11230	4.32
SN74LS37N.A	N	PDIP	14	25	506	13.97	11230	4.32
SN74S37D	D	SOIC	14	50	506.6	8	3940	4.32
SN74S37D.A	D	SOIC	14	50	506.6	8	3940	4.32
SN74S37N	N	PDIP	14	25	506	13.97	11230	4.32
SN74S37N	N	PDIP	14	25	506	13.97	11230	4.32
SN74S37N.A	N	PDIP	14	25	506	13.97	11230	4.32
SN74S37N.A	N	PDIP	14	25	506	13.97	11230	4.32
SNJ54LS37FK	FK	LCCC	20	55	506.98	12.06	2030	NA
SNJ54LS37FK.A	FK	LCCC	20	55	506.98	12.06	2030	NA
SNJ54LS37W	W	CFP	14	25	506.98	26.16	6220	NA
SNJ54LS37W.A	W	CFP	14	25	506.98	26.16	6220	NA
SNJ54S37FK	FK	LCCC	20	55	506.98	12.06	2030	NA
SNJ54S37FK.A	FK	LCCC	20	55	506.98	12.06	2030	NA
SNJ54S37W	W	CFP	14	25	506.98	26.16	6220	NA
SNJ54S37W.A	W	CFP	14	25	506.98	26.16	6220	NA

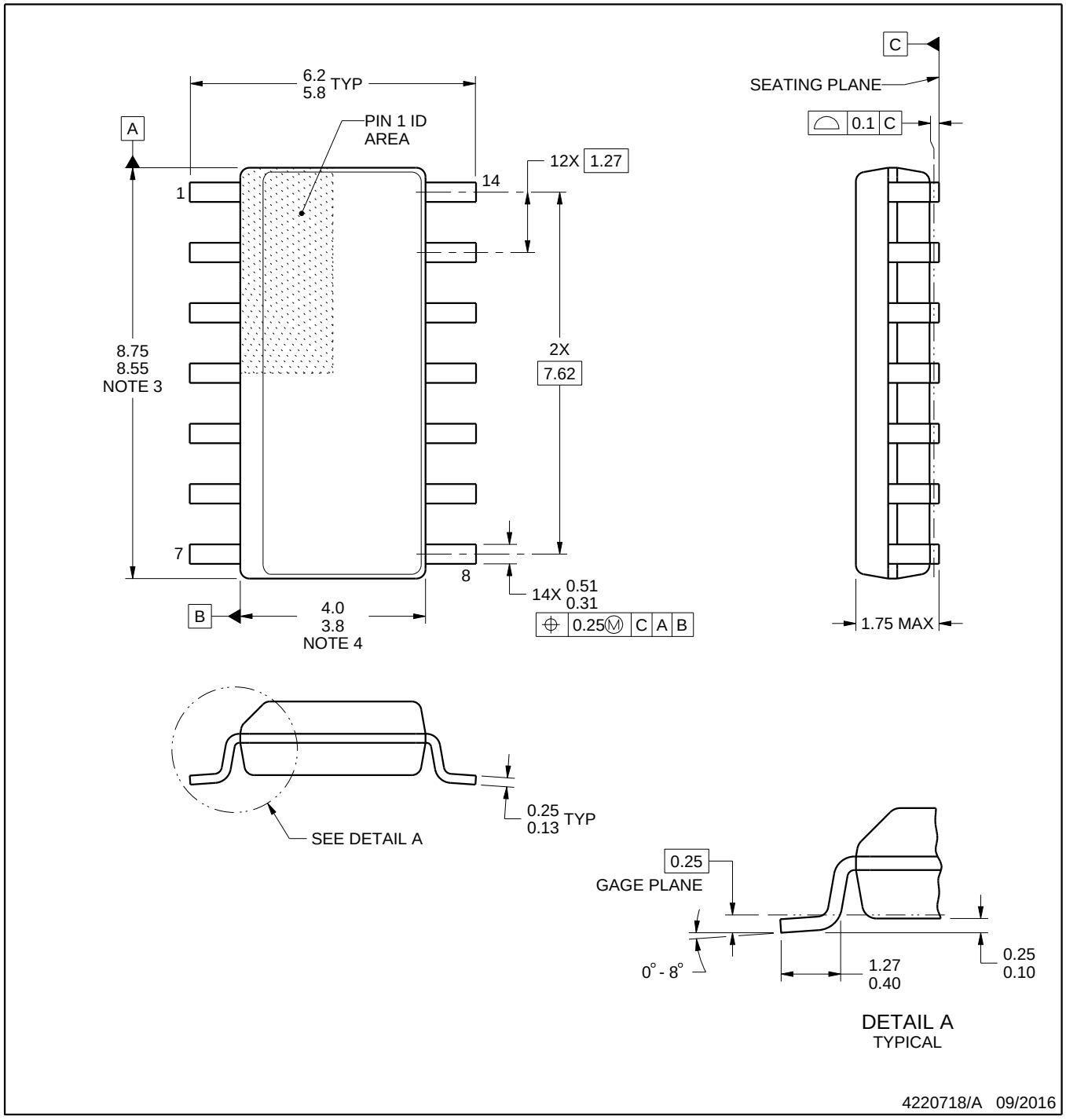

NOTES:

1. All linear dimensions are in millimeters. Dimensions in parenthesis are for reference only. Dimensioning and tolerancing per ASME Y14.5M.
2. This drawing is subject to change without notice.
3. This dimension does not include mold flash, protrusions, or gate burrs. Mold flash, protrusions, or gate burrs shall not exceed 0.15 mm, per side.
4. This dimension does not include interlead flash. Interlead flash shall not exceed 0.43 mm, per side.
5. Reference JEDEC registration MS-012, variation AB.

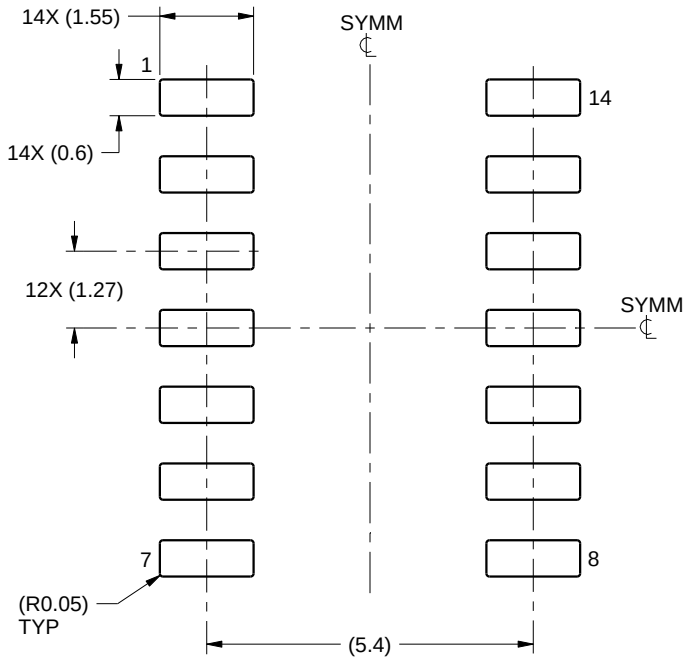

LAND PATTERN EXAMPLE
SCALE:8X

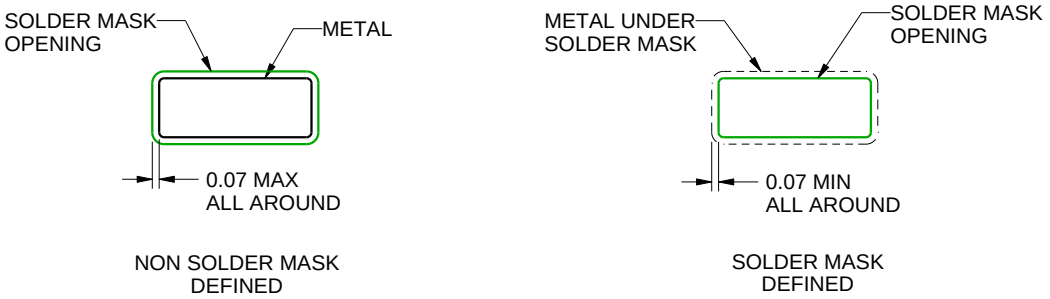

SOLDER MASK DETAILS

4220718/A 09/2016

NOTES: (continued)

6. Publication IPC-7351 may have alternate designs.
7. Solder mask tolerances between and around signal pads can vary based on board fabrication site.

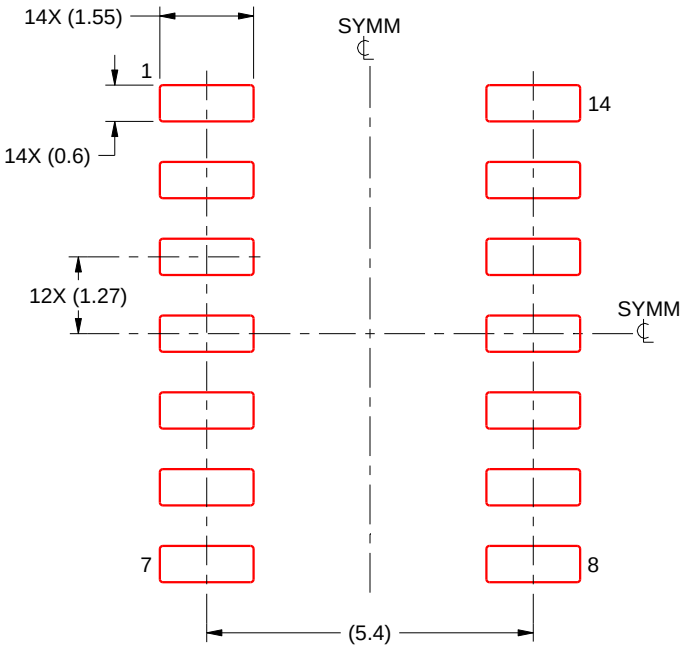

SOLDER PASTE EXAMPLE
BASED ON 0.125 mm THICK STENCIL
SCALE:8X

4220718/A 09/2016

NOTES: (continued)

8. Laser cutting apertures with trapezoidal walls and rounded corners may offer better paste release. IPC-7525 may have alternate design recommendations.
9. Board assembly site may have different recommendations for stencil design.

MECHANICAL DATA

NS (R-PDSO-G)** **PLASTIC SMALL-OUTLINE PACKAGE**

14-PINS SHOWN

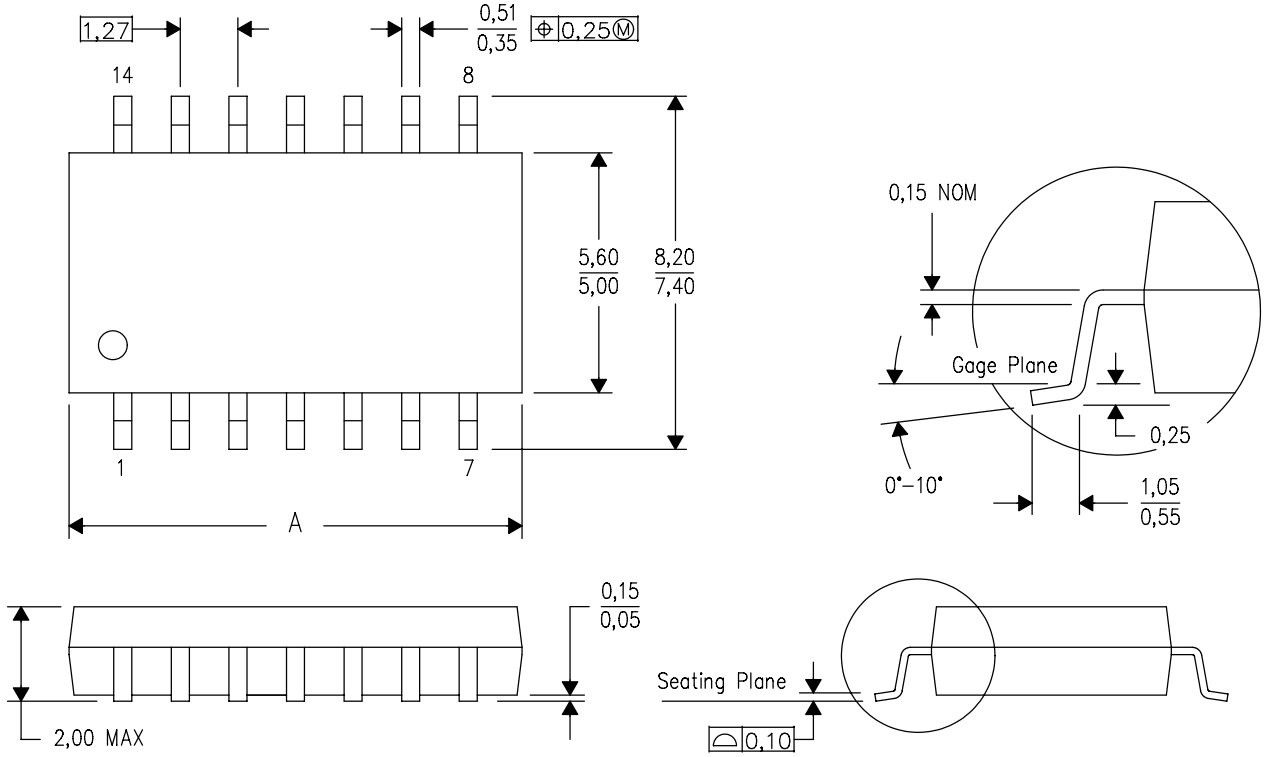

DIM \ PINS **	14	16	20	24
A MAX	10,50	10,50	12,90	15,30
A MIN	9,90	9,90	12,30	14,70

4040062/C 03/03

NOTES:
A. All linear dimensions are in millimeters.
B. This drawing is subject to change without notice.
C. Body dimensions do not include mold flash or protrusion, not to exceed 0,15.

W (R–GDFP–F14) CERAMIC DUAL FLATPACK

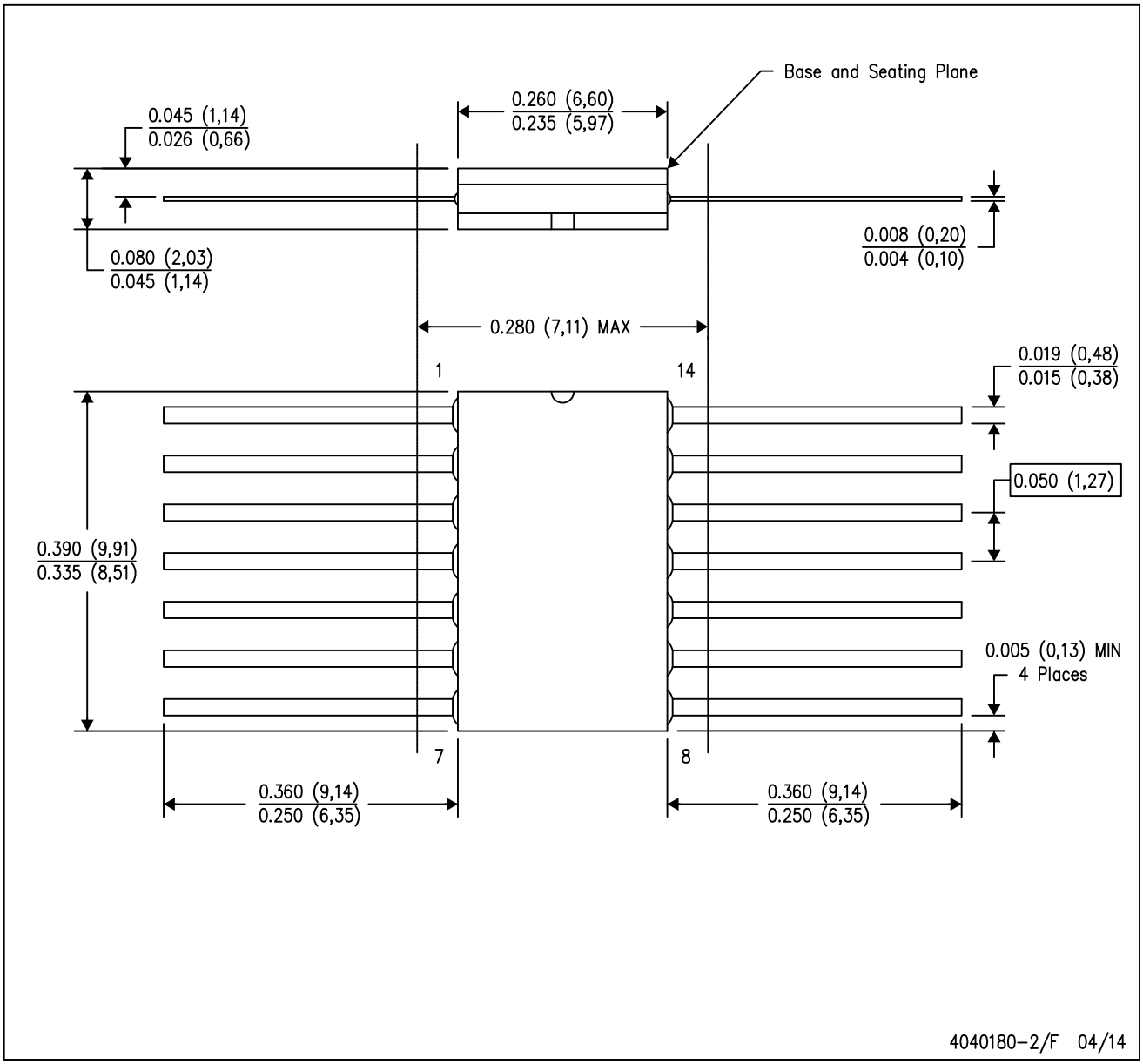

NOTES:
A. All linear dimensions are in inches (millimeters).
B. This drawing is subject to change without notice.
C. This package can be hermetically sealed with a ceramic lid using glass frit.
D. Index point is provided on cap for terminal identification only.
E. Falls within MIL STD 1835 GDFP1–F14

GENERIC PACKAGE VIEW

FK 20

LCCC - 2.03 mm max height

8.89 x 8.89, 1.27 mm pitch

LEADLESS CERAMIC CHIP CARRIER

This image is a representation of the package family, actual package may vary.
Refer to the product data sheet for package details.

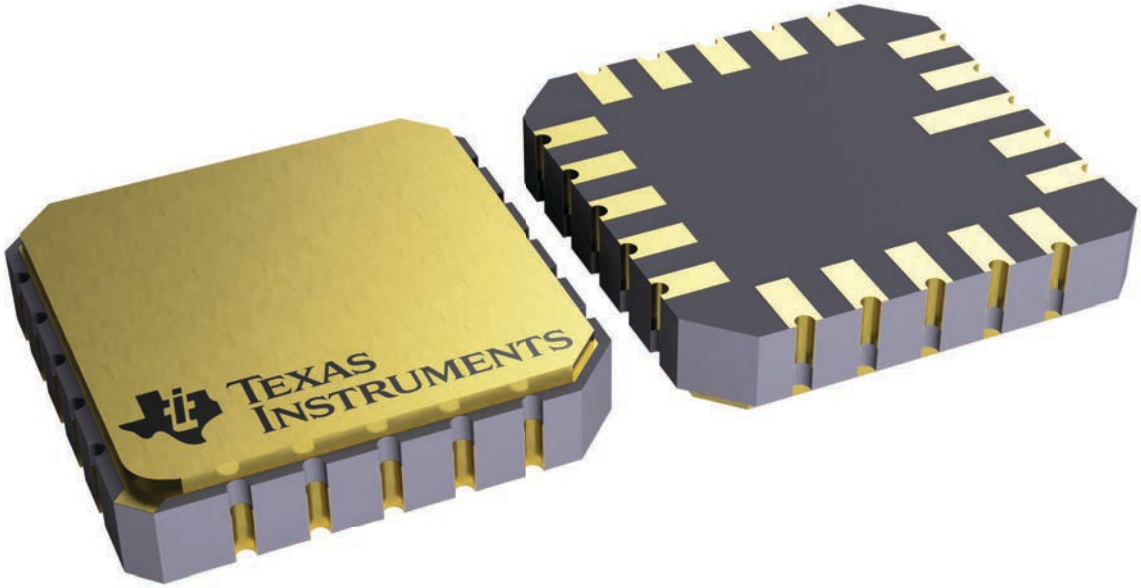

4229370VA\

J 14 CDIP - 5.08 mm max height

CERAMIC DUAL IN LINE PACKAGE

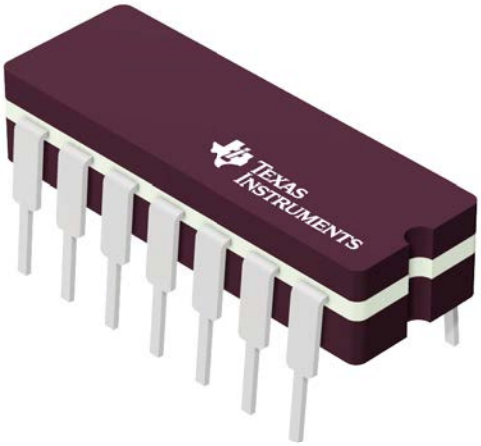

Images above are just a representation of the package family, actual package may vary.
Refer to the product data sheet for package details.

4040083-5/G

PACKAGE OUTLINE

J0014A

CDIP - 5.08 mm max height

CERAMIC DUAL IN LINE PACKAGE

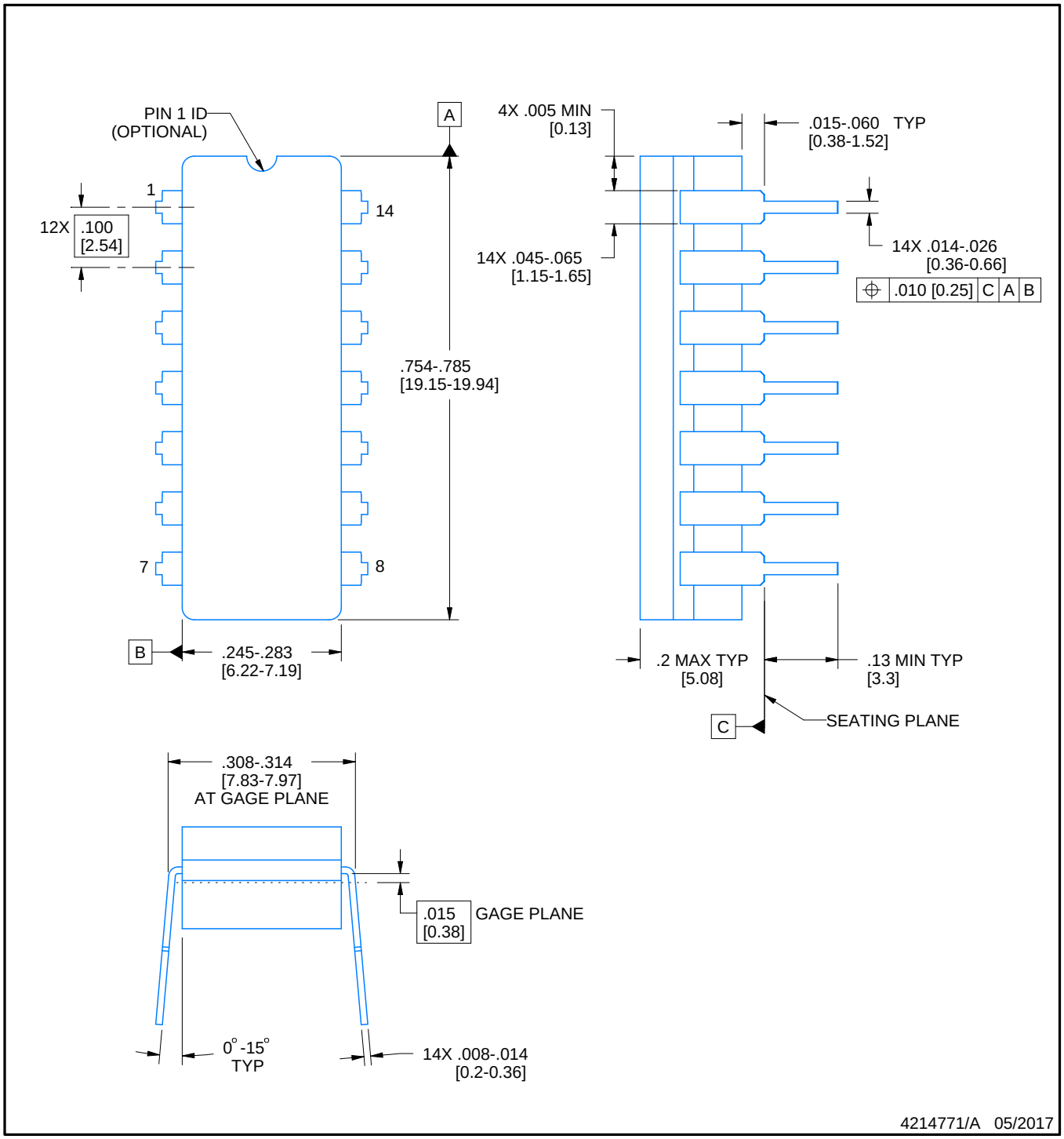

NOTES:

1. All controlling linear dimensions are in inches. Dimensions in brackets are in millimeters. Any dimension in brackets or parenthesis are for reference only. Dimensioning and tolerancing per ASME Y14.5M.
2. This drawing is subject to change without notice.
3. This package is hermitically sealed with a ceramic lid using glass frit.
4. Index point is provided on cap for terminal identification only and on press ceramic glass frit seal only.
5. Falls within MIL-STD-1835 and GDIP1-T14.

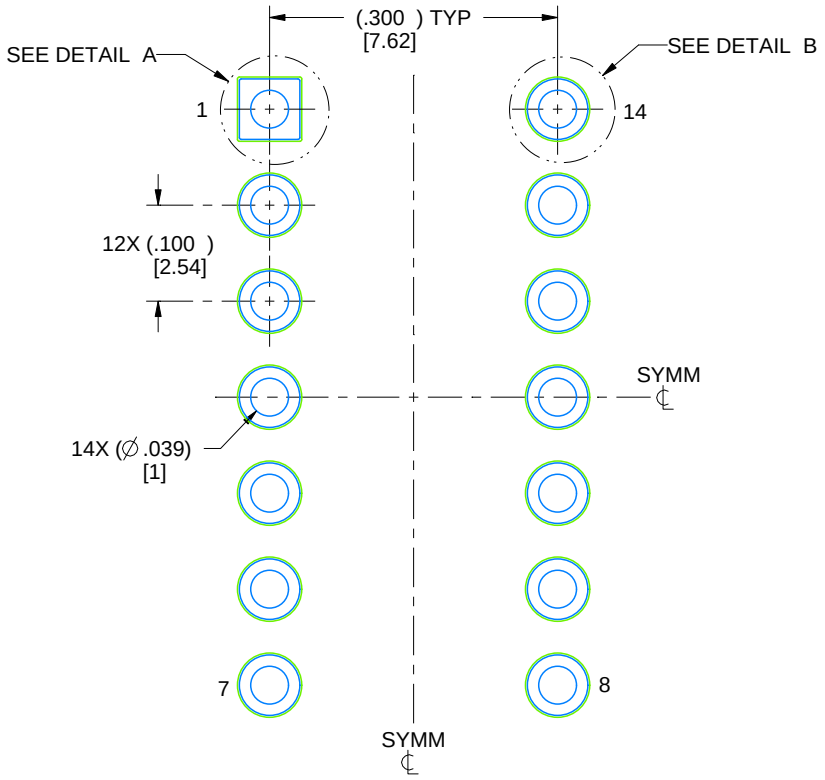

LAND PATTERN EXAMPLE
NON-SOLDER MASK DEFINED
SCALE: 5X

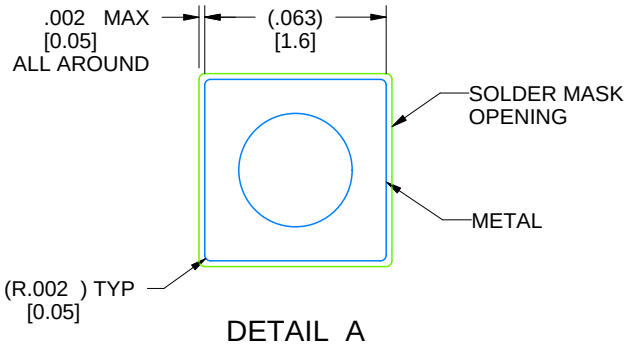

DETAIL A
SCALE: 15X

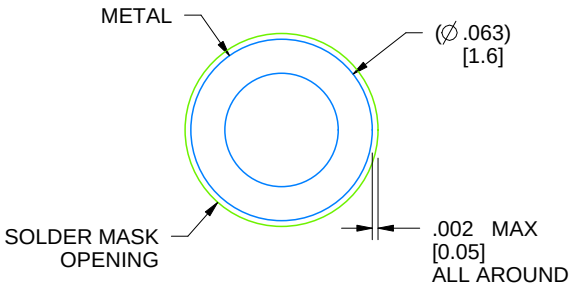

DETAIL B
13X, SCALE: 15X

4214771/A 05/2017

N (R–PDIP–T**) PLASTIC DUAL–IN–LINE PACKAGE

16 PINS SHOWN

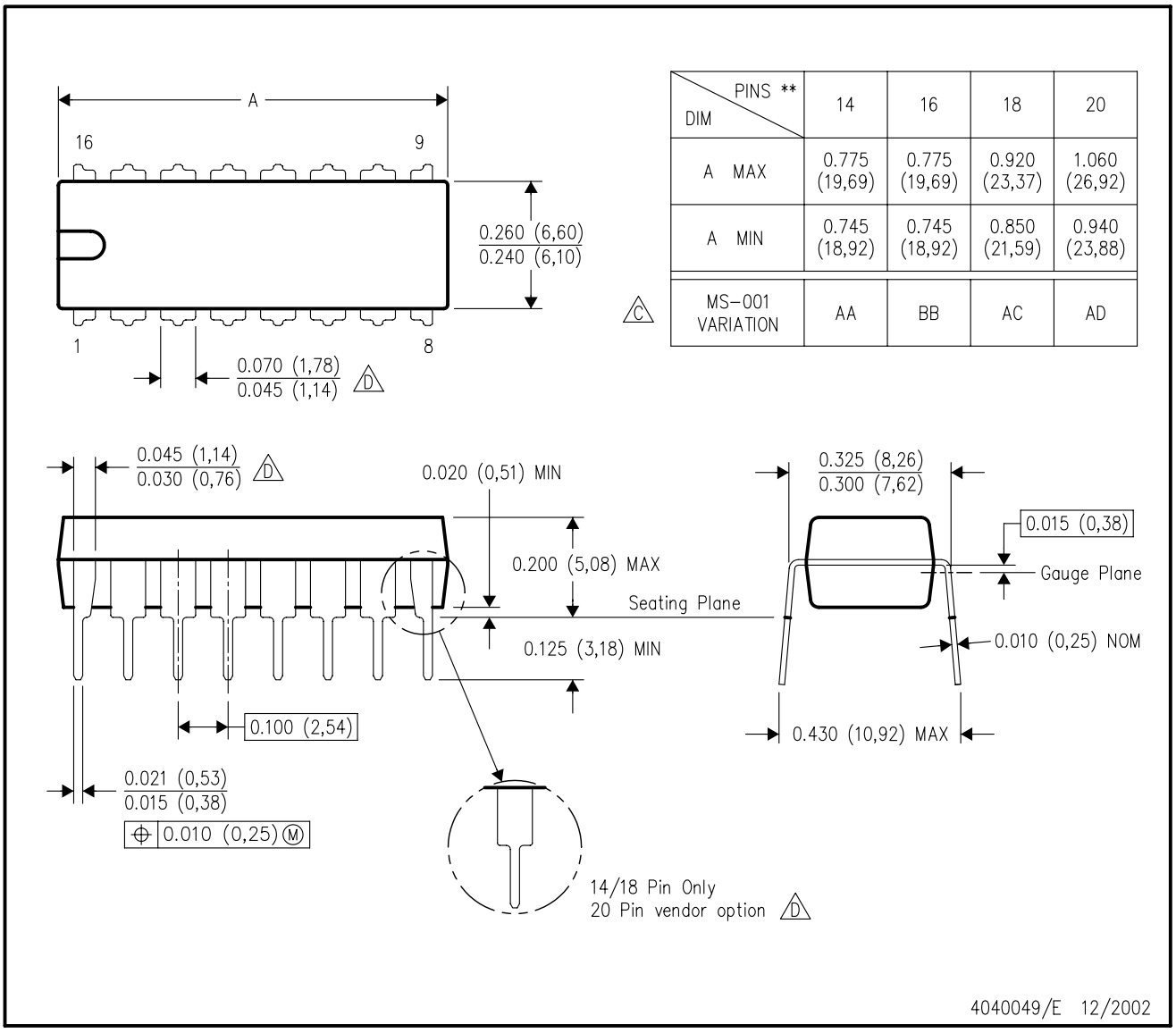

DIM \ PINS **	14	16	18	20
A MAX	0.775 (19,69)	0.775 (19,69)	0.920 (23,37)	1.060 (26,92)
A MIN	0.745 (18,92)	0.745 (18,92)	0.850 (21,59)	0.940 (23,88)
MS–001 VARIATION (C)	AA	BB	AC	AD

NOTES:
A. All linear dimensions are in inches (millimeters).
B. This drawing is subject to change without notice.
C. Falls within JEDEC MS–001, except 18 and 20 pin minimum body length (Dim A).
D. The 20 pin end lead shoulder width is a vendor option, either half or full width.

IMPORTANT NOTICE AND DISCLAIMER

TI PROVIDES TECHNICAL AND RELIABILITY DATA (INCLUDING DATASHEETS), DESIGN RESOURCES (INCLUDING REFERENCE DESIGNS), APPLICATION OR OTHER DESIGN ADVICE, WEB TOOLS, SAFETY INFORMATION, AND OTHER RESOURCES “AS IS” AND WITH ALL FAULTS, AND DISCLAIMS ALL WARRANTIES, EXPRESS AND IMPLIED, INCLUDING WITHOUT LIMITATION ANY IMPLIED WARRANTIES OF MERCHANTABILITY, FITNESS FOR A PARTICULAR PURPOSE OR NON-INFRINGEMENT OF THIRD PARTY INTELLECTUAL PROPERTY RIGHTS.

These resources are intended for skilled developers designing with TI products. You are solely responsible for (1) selecting the appropriate TI products for your application, (2) designing, validating and testing your application, and (3) ensuring your application meets applicable standards, and any other safety, security, regulatory or other requirements.

These resources are subject to change without notice. TI grants you permission to use these resources only for development of an application that uses the TI products described in the resource. Other reproduction and display of these resources is prohibited. No license is granted to any other TI intellectual property right or to any third party intellectual property right. TI disclaims responsibility for, and you fully indemnify TI and its representatives against any claims, damages, costs, losses, and liabilities arising out of your use of these resources.

TI’s products are provided subject to TI’s Terms of Sale, TI’s General Quality Guidelines, or other applicable terms available either on ti.com or provided in conjunction with such TI products. TI’s provision of these resources does not expand or otherwise alter TI’s applicable warranties or warranty disclaimers for TI products. Unless TI explicitly designates a product as custom or customer-specified, TI products are standard, catalog, general purpose devices.

TI objects to and rejects any additional or different terms you may propose.

Copyright © 2026, Texas Instruments Incorporated

Last updated 10/2025