SNx4AC373 Octal D-type Transparent Latches with 3-State Outputs

1 Features

- Operation of 2V to 6V V_{CC}
- Inputs accept voltages to 6V
- Max t_{pd} of 9.5ns at 5V
- 3-state noninverting outputs drive bus lines directly
- Full parallel access for loading

2 Description

These 8-bit latches feature 3-state outputs designed specifically for driving highly capacitive or relatively low-impedance loads. The devices are particularly suitable for implementing buffer registers, I/O ports, bidirectional bus drivers, and working registers.

Device Information

PART NUMBER	PACKAGE(1)	PACKAGE SIZE(2)	BODY SIZE(3)
SNx4AC373	DB (SSOP, 20)	7.2mm x 7.8mm	7.2mm x 5.30mm
	DW (SOIC, 20)	12.80mm x 10.3mm	12.80mm x 7.50mm
	N (PDIP, 20)	24.33mm x 9.4mm	24.33mm x 6.35mm
	NS (SOP, 20)	12.6mm x 7.8mm	12.6mm x 5.3mm
	PW (TSSOP, 20)	6.50mm x 6.4mm	6.50mm x 4.40mm

(1) For more information, see Section 10.
(2) The package size (length × width) is a nominal value and includes pins, where applicable.
(3) The body size (length × width) is a nominal value and does not include pins.

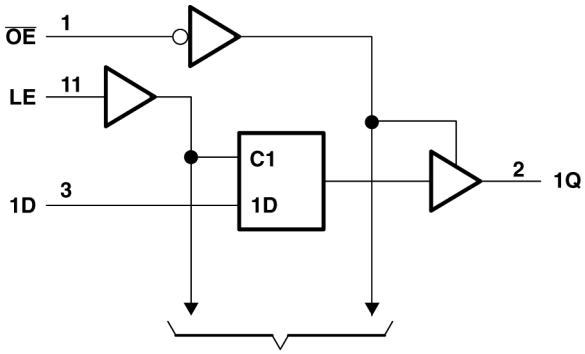

An IMPORTANT NOTICE at the end of this data sheet addresses availability, warranty, changes, use in safety-critical applications, intellectual property matters and other important disclaimers. PRODUCTION DATA.

Table of Contents

1 Features....1
2 Description....1
3 Pin Configuration and Functions....3
4 Specifications....4
4.1 Absolute Maximum Ratings....4
4.2 Recommended Operating Conditions....4
4.3 Thermal Information....4
4.4 Electrical Characteristics....5
4.5 Timing Requirements, V_{CC} = 3.3 V ± 0.3 V....5
4.6 Timing Requirements, V_{CC} = 5 V ± 0.5 V....5
4.7 Switching Characteristics, V_{CC} = 3.3 V ± 0.3 V....6
4.8 Switching Characteristics, V_{CC} = 5 V ± 0.5 V....6
4.9 Operating Characteristics....6
5 Parameter Measurement Information....7
6 Detailed Description....8
6.1 Overview....8
6.2 Functional Block Diagram....8
6.3 Device Functional Modes....8
7 Application and Implementation....9
7.1 Power Supply Recommendations....9
7.2 Layout....9
8 Device and Documentation Support....10
8.1 Documentation Support....10
8.2 Receiving Notification of Documentation Updates....10
8.3 Support Resources....10
8.4 Trademarks....10
8.5 Electrostatic Discharge Caution....10
8.6 Glossary....10
9 Revision History....10
10 Mechanical, Packaging, and Orderable Information....11

Copyright © 2024 Texas Instruments Incorporated

3 Pin Configuration and Functions

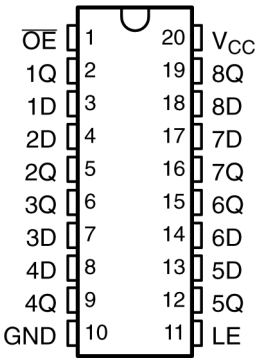

Figure 3-1. SN54AC373 J or W Package; SN74AC373 DB, DW, N, NS, or PW Package (Top View)

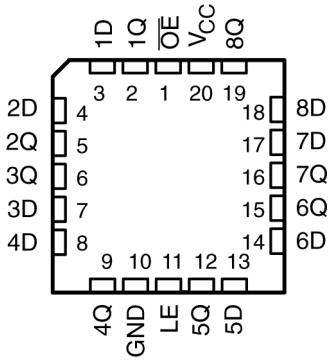

Figure 3-2. SN54AC373 FK Package (Top View)

Table 3-1. Pin Functions

PIN			TYPE	DESCRIPTION
NO.	SSOP, TVSOP, SOIC, SO, or TSSOP	VQFN		
1	$\overline{OE}$	$\overline{OE}$	I	Output Enable
2	1Q	1Q	O	1Q Output
3	1D	1D	I	1D Input
4	2D	2D	I	2D Input
5	2Q	2Q	O	2Q Output
6	3Q	3Q	O	3Q Output
7	3D	3D	I	3D Input
8	4D	4D	I	4D Input
9	4Q	4Q	O	4Q Output
10	GND	GND	—	Ground Pin
11	LE	LE	I	Latch Enable
12	5Q	5Q	O	5Q Output
13	5D	5D	I	5D Input
14	6D	6D	I	6D Input
15	6Q	6Q	O	6Q Output
16	7Q	7Q	O	7Q Output
17	7D	7D	I	7D Input
18	8D	8D	I	8D Input
19	8Q	8Q	O	8Q Output
20	V_{CC}	V_{CC}	—	Power Pin
—	—	Thermal Pad	—	Thermal Pad, normally tied to GND

Copyright © 2024 Texas Instruments Incorporated

4 Specifications

4.1 Absolute Maximum Ratings

over operating free-air temperature range (unless otherwise noted)[1]

			MIN	MAX	UNIT
V_{CC}	Supply voltage range		−0.5	7	V
V_I [1]	Input voltage range		−0.5	V_{CC} + 0.5	V
V_O [1]	Output voltage range		−0.5	V_{CC} + 0.5	V
I_{IK}	Input clamp current	(V_I < 0 or V_I > V_{CC})		±20	mA
I_{OK}	Output clamp current	(V_O < 0 or V_O > V_{CC})		±20	mA
I_O	Continuous output current	(V_O = 0 to V_{CC})		±50	mA
	Continuous current through V_{CC} or GND			±200	mA
T_{stg}	Storage temperature range		−65	150	°C

(1) Stresses beyond those listed under “absolute maximum ratings” may cause permanent damage to the device. These are stress ratings only, and functional operation of the device at these or any other conditions beyond those indicated under “recommended operating conditions” is not implied. Exposure to absolute-maximum-rated conditions for extended periods may affect device reliability.
(2) The input and output voltage ratings may be exceeded if the input and output current ratings are observed.

4.2 Recommended Operating Conditions

over recommended operating free-air temperature range (unless otherwise noted)[1]

			SN54AC373		SN74AC373		UNIT
			MIN	MAX	MIN	MAX	
V_{CC}	Supply voltage		2	6	2	6	V
V_{IH}	High-level input voltage	V_{CC} = 3 V	2.1		2.1		V
		V_{CC} = 4.5 V	3.15		3.15		
		V_{CC} = 5.5 V	3.85		3.85		
V_{IL}	Low-level input voltage	V_{CC} = 3 V		0.9		0.9	V
		V_{CC} = 4.5V		1.35		1.35	
		V_{CC} = 5.5 V		1.65		1.65	
V_I	Input voltage		0	V_{CC}	0	V_{CC}	V
V_O	Output voltage		0	V_{CC}	0	V_{CC}	V
I_{OH}	High-level output current	V_{CC} = 3 V		−12		−12	mA
		V_{CC} = 4.5 V		−24		−24	
		V_{CC} = 5.5 V		−24		−24	
I_{OL}	Low-level output current	V_{CC} = 3 V		12		12	mA
		V_{CC} = 4.5 V		24		24	
		V_{CC} = 5.5 V		24		24	
Δt/Δv	Input transition rise or fall rate			8		8	ns/V
T_A	Operating free-air temperature		−55	125	−40	85	°C

(1) All unused inputs of the device must be held at V_{CC} or GND to for proper device operation. Refer to the TI application report, *Implications of Slow or Floating CMOS Inputs*, literature number SCBA004.

4.3 Thermal Information

THERMAL METRIC[(1)]		SNx4AC373					UNIT
		DB (SSOP)	DW (SOIC)	N	NS (SO)	PW (TSSOP)	
		20 PINS					
$R_{\theta JA}$	Junction-to-ambient thermal resistance	70	101.2	69	60	126.2	°C/W

(1) For more information about traditional and new thermal metrics, see the *Semiconductor and IC Package Thermal Metrics* application report.

Copyright © 2024 Texas Instruments Incorporated

4.4 Electrical Characteristics

over recommended operating free-air temperature range (unless otherwise noted)

PARAMETER	TEST CONDITIONS		V_{CC}	T_A = 25°C			SN54AC373		SN74AC373		UNIT
				MIN	TYP	MAX	MIN	MAX	MIN	MAX	
V_{OH}	I_{OH} = −50μA		3 V	2.9			2.9		2.9		V
			4.5 V	4.4			4.4		4.4		
			5.5 V	5.4			5.4		5.4		
	I_{OH} = −12 mA		3 V	2.56			2.4		2.46		
	I_{OH} = −24 mA		4.5 V	3.86			3.7		3.76		
			5.5 V	4.86			4.7		4.76		
V_{OL}	I_{OL} = 50μA		3 V			0.1		0.1		0.1	V
			4.5 V			0.1		0.1		0.1	
			5.5 V			0.1		0.1		0.1	
	I_{OL} = 12 mA		3 V			0.36		0.5		0.44	
	I_{OL} = 24 mA		4.5 V			0.36		0.5		0.44	
			5.5 V			0.36		0.5		0.44	
I_I	V_I = V_{CC} or GND		5.5 V			±0.1		±1		±1	μA
I_{OZ}	V_O = V_{CC} or GND		5.5 V			±0.25		±5		±2.5	μA
I_{CC}	V_I = V_{CC} or GND,	I_O = 0	5.5 V			4		80		40	μA
C_i	V_I = V_{CC} or GND		5 V		4.5						pF

4.5 Timing Requirements, V_{CC} = 3.3 V ± 0.3 V

over recommended operating free-air temperature range, V_{CC} = 3.3 V ± 0.3 V (unless otherwise noted) (see Load Circuit and Voltage Waveforms)

		T_A = 25°C		SN54AC373		SN74AC373		UNIT
		MIN	MAX	MIN	MAX	MIN	MAX	
t_w	Pulse duration, LE high	5.5		6.5		6		ns
t_{su}	Setup time, data before LE↓	5.5		6.5		6		ns
t_h	Hold time, data after LE↓	1		1		1		ns

4.6 Timing Requirements, V_{CC} = 5 V ± 0.5 V

over recommended operating free-air temperature range, V_{CC} = 5 V ± 0.5 V (unless otherwise noted) (see Load Circuit and Voltage Waveforms)

		T_A = 25°C		SN54AC373		SN74AC373		UNIT
		MIN	MAX	MIN	MAX	MIN	MAX	
t_w	Pulse duration, LE high	4		5		4.5		ns
t_{su}	Setup time, data before LE↓	4		5		4.5		ns
t_h	Hold time, data after LE↓	1		1		1		ns

Copyright © 2024 Texas Instruments Incorporated

4.7 Switching Characteristics, V_{CC} = 3.3 V ± 0.3 V

over recommended operating free-air temperature range, V_{CC} = 3.3 V ± 0.3 V (unless otherwise noted) (see Load Circuit and Voltage Waveforms)

PARAMETER	TO (INPUT)	TO (OUTPUT)	T_A = 25°C			SN54AC373		SN74AC373		UNIT
			MIN	TYP	MAX	MIN	MAX	MIN	MAX	
t_{PLH}	D	Q	1.5	10	13.5	1	16.5	1.5	15	ns
t_{PHL}			1.5	9.5	13.0	1	16	1.5	14.5	
t_{PLH}	LE	Q	1.5	10	13.5	1	16.5	1.5	15	ns
t_{PHL}			1.5	9.5	12.5	1	15	1.5	14	
t_{PZH}	$\overline{OE}$	Q	1.5	9	11.5	1	14	1	13	ns
t_{PZL}			1.5	8.5	11.5	1	13.5	1	13	
t_{PHZ}	$\overline{OE}$	Q	1.5	10	12.5	1	16	1	14.5	ns
t_{PLZ}			1.5	8	11.5	1	13	1	12.5	

4.8 Switching Characteristics, V_{CC} = 5 V ± 0.5 V

over recommended operating free-air temperature range, V_{CC} = 5 V ± 0.5 V (unless otherwise noted) (see Load Circuit and Voltage Waveforms)

PARAMETER	TO (INPUT)	TO (OUTPUT)	T_A = 25°C			SN54AC373		SN74AC373		UNIT
			MIN	TYP	MAX	MIN	MAX	MIN	MAX	
t_{PLH}	D	Q	1.5	7	9.5	1	11.5	1.5	10.5	ns
t_{PHL}			1.5	7	9.5	1	11.5	1.5	10.5	
t_{PLH}	LE	Q	1.5	7.5	9.5	1	12	1.5	10.5	ns
t_{PHL}			1.5	7	9.5	1	11	1.5	10.5	
t_{PZH}	$\overline{OE}$	Q	1.5	7	8.5	1	10.5	1	9.5	ns
t_{PZL}			1.5	6.5	8.5	1	10	1	9.5	
t_{PHZ}	$\overline{OE}$	Q	1.5	8	11	1	13.5	1	12.5	ns
t_{PLZ}			1.5	6.5	8.5	1	10.5	1	10	

4.9 Operating Characteristics

V_{CC} = 5 V, T_A = 25°C

PARAMETER		TEST CONDITIONS		TYP	UNIT
C_{pd}	Power dissipation capacitance	C_L = 50 pF,	f = 1 MHz	40	pF

Copyright © 2024 Texas Instruments Incorporated

5 Parameter Measurement Information

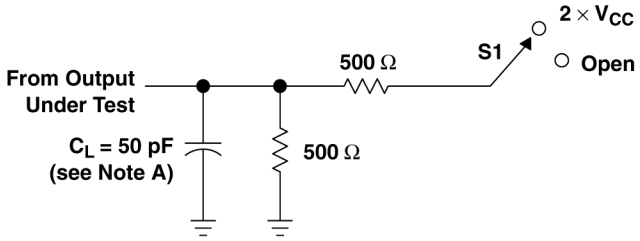

LOAD CIRCUIT

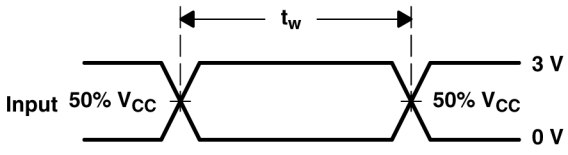

VOLTAGE WAVEFORMS

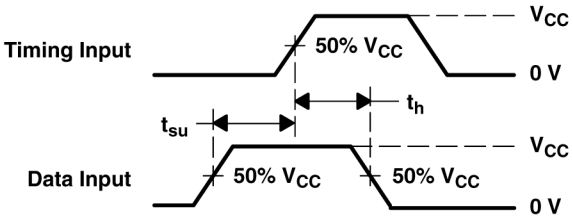

VOLTAGE WAVEFORMS

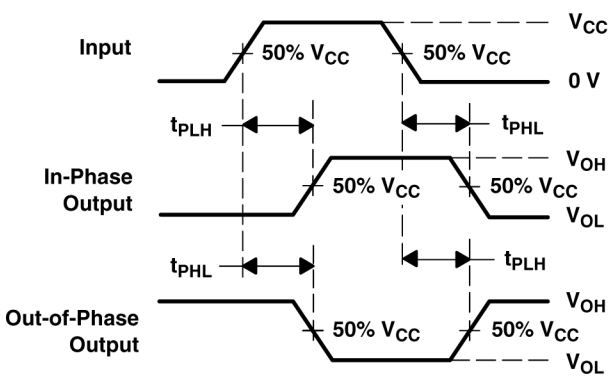

VOLTAGE WAVEFORMS

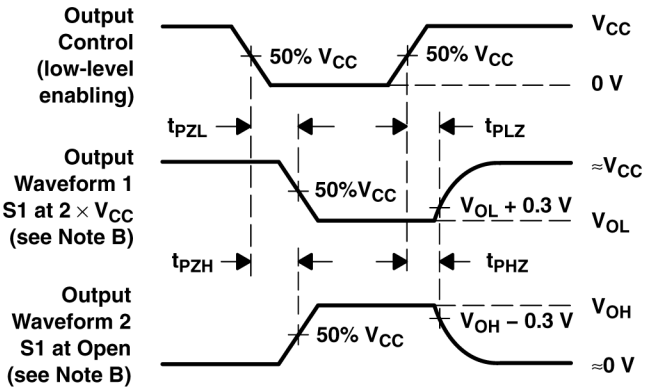

VOLTAGE WAVEFORMS

A. C_L includes probe and jig capacitance.
B. Waveform 1 is for an output with internal conditions such that the output is low except when disabled by the output control. Waveform 2 is for an output with internal conditions such that the output is high except when disabled by the output control.
C. All input pulses are supplied by generators having the following characteristics: PRR ≤ 1 MHz, Z_O = 50 Ω, t_r ≤ 2.5 ns, t_f ≤ 2.5 ns.
D. The outputs are measured one at a time with one input transition per measurement.

Figure 5-1. Load Circuit and Voltage Waveforms

TEST	S1
t_{PLH}/t_{PHL}	Open
t_{PLZ}/t_{PZL}	2 × V_{CC}
t_{PHZ}/t_{PZH}	Open

Copyright © 2024 Texas Instruments Incorporated

6 Detailed Description

6.1 Overview

The eight latches are D-type transparent latches. When the latch-enable (LE) input is high, the Q outputs follow the data (D) inputs. When LE is taken low, the Q outputs are latched at the logic levels set up at the D inputs.

A buffered output-enable ($\overline{OE}$) input can be used to place the eight outputs in either a normal logic state (high or low logic levels) or the high-impedance state. In the high-impedance state, the outputs neither load nor drive the bus lines significantly. The high-impedance state and increased drive provide the capability to drive bus lines in bus-organized systems without need for interface or pullup components.

$\overline{OE}$ does not affect the internal operations of the latches. Old data can be retained or new data can be entered while the outputs are in the high-impedance state.

For specified high-impedance state during power up or power down, $\overline{OE}$ must be tied to V_{CC} through a pullup resistor; the minimum value of the resistor is determined by the current-sinking capability of the driver.

6.2 Functional Block Diagram

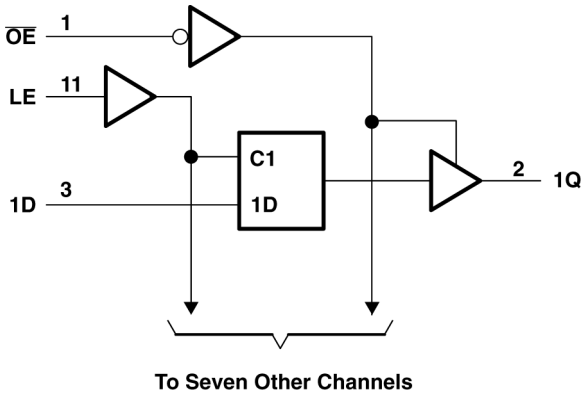

Figure 6-1. Logic Diagram (Positive Logic)

6.3 Device Functional Modes

Table 6-1. Function Table (Each Latch)

INPUTS			OUTPUT Q
$\overline{OE}$	LE	D	
L	H	H	H
L	H	L	L
L	L	X	Q_0
H	X	X	Z

Copyright © 2024 Texas Instruments Incorporated

7 Application and Implementation

Note

Information in the following applications sections is not part of the TI component specification, and TI does not warrant its accuracy or completeness. TI's customers are responsible for determining suitability of components for their purposes, as well as validating and testing their design implementation to confirm system functionality.

7.1 Power Supply Recommendations

7.2 Layout

7.2.1 Layout Guidelines

When using multiple bit logic devices, inputs should not float. In many cases, functions or parts of functions of digital logic devices are unused. Some examples are when only two inputs of a triple-input AND gate are used, or when only 3 of the 4-buffer gates are used. Such input pins should not be left unconnected because the undefined voltages at the outside connections result in undefined operational states.

Specified in Layout Diagram are rules that must be observed under all circumstances. All unused inputs of digital logic devices must be connected to a high or low bias to prevent them from floating. The logic level that should be applied to any particular unused input depends on the function of the device. Generally they will be tied to GND or V_{CC}, whichever makes more sense or is more convenient. It is acceptable to float outputs unless the part is a transceiver. If the transceiver has an output enable pin, it will disable the outputs section of the part when asserted. This will not disable the input section of the I/Os so they also cannot float when disabled.

7.2.2 Layout Example

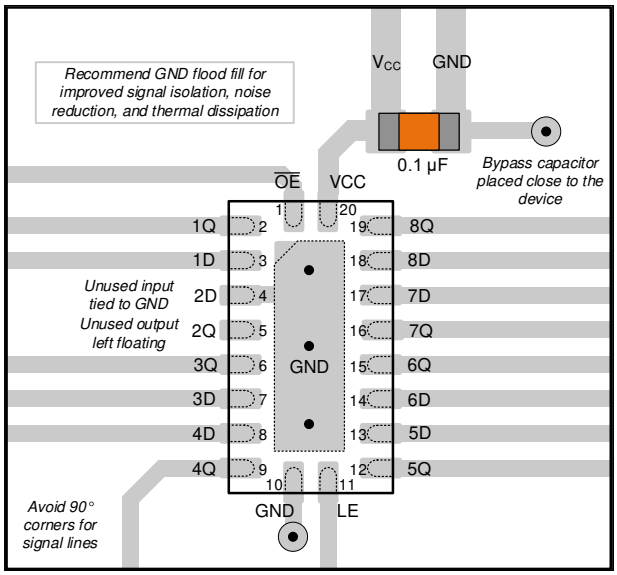

Figure 7-1. Layout example for the SNx4AC373

8 Device and Documentation Support

8.1 Documentation Support

8.1.1 Related Documentation

The table below lists quick access links. Categories include technical documents, support and community resources, tools and software, and quick access to sample or buy.

Table 8-1. Related Links

PARTS	PRODUCT FOLDER	SAMPLE & BUY	TECHNICAL DOCUMENTS	TOOLS & SOFTWARE	SUPPORT & COMMUNITY
SN54AC373	Click here	Click here	Click here	Click here	Click here
SN74AC373	Click here	Click here	Click here	Click here	Click here

8.2 Receiving Notification of Documentation Updates

To receive notification of documentation updates, navigate to the device product folder on ti.com. Click on *Notifications* to register and receive a weekly digest of any product information that has changed. For change details, review the revision history included in any revised document.

8.3 Support Resources

TI E2E™ support forums are an engineer's go-to source for fast, verified answers and design help — straight from the experts. Search existing answers or ask your own question to get the quick design help you need.

Linked content is provided "AS IS" by the respective contributors. They do not constitute TI specifications and do not necessarily reflect TI's views; see TI's Terms of Use.

8.4 Trademarks

TI E2E™ is a trademark of Texas Instruments.
All trademarks are the property of their respective owners.

8.5 Electrostatic Discharge Caution



This integrated circuit can be damaged by ESD. Texas Instruments recommends that all integrated circuits be handled with appropriate precautions. Failure to observe proper handling and installation procedures can cause damage.

ESD damage can range from subtle performance degradation to complete device failure. Precision integrated circuits may be more susceptible to damage because very small parametric changes could cause the device not to meet its published specifications.

8.6 Glossary

TI Glossary — This glossary lists and explains terms, acronyms, and definitions.

9 Revision History

NOTE: Page numbers for previous revisions may differ from page numbers in the current version.

Changes from Revision E (August 2023) to Revision F (February 2024)	Page
• Updated RθJA values: DW = 58 to 101.2, PW = 83 to 126.2, all values in °C/W	4
• Added *Application and Implementation* section	9

Changes from Revision D (October 2003) to Revision E (August 2023)	Page
• Added *Device Information* table, *Pin Functions* table, *Thermal Information* table, *Device Functional Modes*, *Device and Documentation Support* section, and *Mechanical, Packaging, and Orderable Information* section	1

Copyright © 2024 Texas Instruments Incorporated

10 Mechanical, Packaging, and Orderable Information

The following pages include mechanical, packaging, and orderable information. This information is the most current data available for the designated devices. This data is subject to change without notice and revision of this document. For browser-based versions of this data sheet, refer to the left-hand navigation.

Copyright © 2024 Texas Instruments Incorporated

PACKAGING INFORMATION

Orderable part number	Status (1)	Material type (2)	Package | Pins	Package qty | Carrier	RoHS (3)	Lead finish/ Ball material (4)	MSL rating/ Peak reflow (5)	Op temp (°C)	Part marking (6)
5962-87555012A	Active	Production	LCCC (FK) | 20	55 | TUBE	No	SNPB	N/A for Pkg Type	-55 to 125	5962-87555012A SNJ54AC 373FK
5962-8755501RA	Active	Production	CDIP (J) | 20	20 | TUBE	No	SNPB	N/A for Pkg Type	-55 to 125	5962-8755501RA SNJ54AC373J
5962-8755501SA	Active	Production	CFP (W) | 20	25 | TUBE	No	SNPB	N/A for Pkg Type	-55 to 125	5962-8755501SA SNJ54AC373W
5962-8755501VSA	Active	Production	CFP (W) | 20	25 | TUBE	No	SNPB	N/A for Pkg Type	-55 to 125	5962-8755501VSA SNV54AC373W
5962-8755501VSA.A	Active	Production	CFP (W) | 20	25 | TUBE	No	SNPB	N/A for Pkg Type	-55 to 125	5962-8755501VSA SNV54AC373W
SN74AC373DBR	Active	Production	SSOP (DB) | 20	2000 | LARGE T&R	Yes	NIPDAU	Level-1-260C-UNLIM	-40 to 85	AC373
SN74AC373DBR.A	Active	Production	SSOP (DB) | 20	2000 | LARGE T&R	Yes	NIPDAU	Level-1-260C-UNLIM	-40 to 85	AC373
SN74AC373DWR	Active	Production	SOIC (DW) | 20	2000 | LARGE T&R	Yes	NIPDAU	Level-1-260C-UNLIM	-40 to 85	AC373
SN74AC373DWR.A	Active	Production	SOIC (DW) | 20	2000 | LARGE T&R	Yes	NIPDAU	Level-1-260C-UNLIM	-40 to 85	AC373
SN74AC373DWRE4	Active	Production	SOIC (DW) | 20	2000 | LARGE T&R	Yes	NIPDAU	Level-1-260C-UNLIM	-40 to 85	AC373
SN74AC373N	NRND	Production	PDIP (N) | 20	20 | TUBE	Yes	NIPDAU	N/A for Pkg Type	-40 to 85	SN74AC373N
SN74AC373N.A	NRND	Production	PDIP (N) | 20	20 | TUBE	Yes	NIPDAU	N/A for Pkg Type	-40 to 85	SN74AC373N
SN74AC373NE4	NRND	Production	PDIP (N) | 20	20 | TUBE	Yes	NIPDAU	N/A for Pkg Type	-40 to 85	SN74AC373N
SN74AC373NSR	Active	Production	SOP (NS) | 20	2000 | LARGE T&R	Yes	NIPDAU	Level-1-260C-UNLIM	-40 to 85	AC373
SN74AC373NSR.A	Active	Production	SOP (NS) | 20	2000 | LARGE T&R	Yes	NIPDAU	Level-1-260C-UNLIM	-40 to 85	AC373
SN74AC373PW	Obsolete	Production	TSSOP (PW) | 20	-	-	Call TI	Call TI	-40 to 85	AC373
SN74AC373PWR	Active	Production	TSSOP (PW) | 20	2000 | LARGE T&R	Yes	NIPDAU	Level-1-260C-UNLIM	-40 to 85	AC373
SN74AC373PWR.A	Active	Production	TSSOP (PW) | 20	2000 | LARGE T&R	Yes	NIPDAU	Level-1-260C-UNLIM	-40 to 85	AC373
SNJ54AC373FK	Active	Production	LCCC (FK) | 20	55 | TUBE	No	SNPB	N/A for Pkg Type	-55 to 125	5962-87555012A SNJ54AC 373FK

Orderable part number	Status (1)	Material type (2)	Package | Pins	Package qty | Carrier	RoHS (3)	Lead finish/ Ball material (4)	MSL rating/ Peak reflow (5)	Op temp (°C)	Part marking (6)
SNJ54AC373FK.A	Active	Production	LCCC (FK) | 20	55 | TUBE	No	SNPB	N/A for Pkg Type	-55 to 125	5962-87555012A SNJ54AC 373FK
SNJ54AC373J	Active	Production	CDIP (J) | 20	20 | TUBE	No	SNPB	N/A for Pkg Type	-55 to 125	5962-8755501RA SNJ54AC373J
SNJ54AC373J.A	Active	Production	CDIP (J) | 20	20 | TUBE	No	SNPB	N/A for Pkg Type	-55 to 125	5962-8755501RA SNJ54AC373J
SNJ54AC373W	Active	Production	CFP (W) | 20	25 | TUBE	No	SNPB	N/A for Pkg Type	-55 to 125	5962-8755501SA SNJ54AC373W
SNJ54AC373W.A	Active	Production	CFP (W) | 20	25 | TUBE	No	SNPB	N/A for Pkg Type	-55 to 125	5962-8755501SA SNJ54AC373W

(1) **Status:** For more details on status, see our product life cycle.

(2) **Material type:** When designated, preproduction parts are prototypes/experimental devices, and are not yet approved or released for full production. Testing and final process, including without limitation quality assurance, reliability performance testing, and/or process qualification, may not yet be complete, and this item is subject to further changes or possible discontinuation. If available for ordering, purchases will be subject to an additional waiver at checkout, and are intended for early internal evaluation purposes only. These items are sold without warranties of any kind.

(3) **RoHS values:** Yes, No, RoHS Exempt. See the TI RoHS Statement for additional information and value definition.

(4) **Lead finish/Ball material:** Parts may have multiple material finish options. Finish options are separated by a vertical ruled line. Lead finish/Ball material values may wrap to two lines if the finish value exceeds the maximum column width.

(5) **MSL rating/Peak reflow:** The moisture sensitivity level ratings and peak solder (reflow) temperatures. In the event that a part has multiple moisture sensitivity ratings, only the lowest level per JEDEC standards is shown. Refer to the shipping label for the actual reflow temperature that will be used to mount the part to the printed circuit board.

(6) **Part marking:** There may be an additional marking, which relates to the logo, the lot trace code information, or the environmental category of the part.

Multiple part markings will be inside parentheses. Only one part marking contained in parentheses and separated by a "~" will appear on a part. If a line is indented then it is a continuation of the previous line and the two combined represent the entire part marking for that device.

Important Information and Disclaimer: The information provided on this page represents TI's knowledge and belief as of the date that it is provided. TI bases its knowledge and belief on information provided by third parties, and makes no representation or warranty as to the accuracy of such information. Efforts are underway to better integrate information from third parties. TI has taken and continues to take reasonable steps to provide representative and accurate information but may not have conducted destructive testing or chemical analysis on incoming materials and chemicals. TI and TI suppliers consider certain information to be proprietary, and thus CAS numbers and other limited information may not be available for release.

In no event shall TI's liability arising out of such information exceed the total purchase price of the TI part(s) at issue in this document sold by TI to Customer on an annual basis.

OTHER QUALIFIED VERSIONS OF SN54AC373, SN54AC373-SP, SN74AC373 :

- Catalog : SN74AC373, SN54AC373
- Military : SN54AC373
- Space : SN54AC373-SP

NOTE: Qualified Version Definitions:

- Catalog - TI's standard catalog product
- Military - QML certified for Military and Defense Applications
- Space - Radiation tolerant, ceramic packaging and qualified for use in Space-based application

TAPE AND REEL INFORMATION

REEL DIMENSIONS

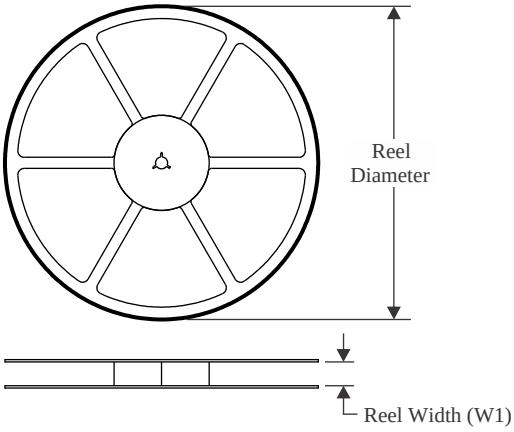

TAPE DIMENSIONS

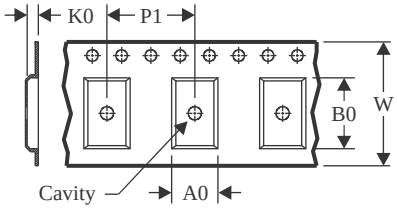

A0	Dimension designed to accommodate the component width
B0	Dimension designed to accommodate the component length
K0	Dimension designed to accommodate the component thickness
W	Overall width of the carrier tape
P1	Pitch between successive cavity centers

QUADRANT ASSIGNMENTS FOR PIN 1 ORIENTATION IN TAPE

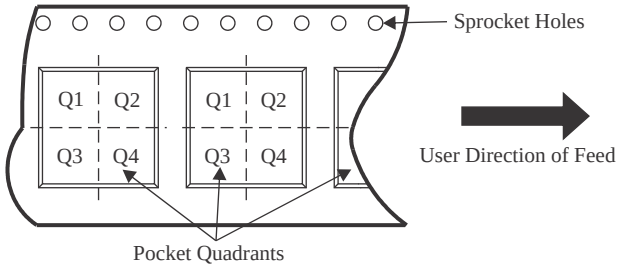

*All dimensions are nominal

Device	Package Type	Package Drawing	Pins	SPQ	Reel Diameter (mm)	Reel Width W1 (mm)	A0 (mm)	B0 (mm)	K0 (mm)	P1 (mm)	W (mm)	Pin1 Quadrant
SN74AC373DBR	SSOP	DB	20	2000	330.0	16.4	8.2	7.5	2.5	12.0	16.0	Q1
SN74AC373DWR	SOIC	DW	20	2000	330.0	24.4	10.9	13.3	2.7	12.0	24.0	Q1
SN74AC373DWR	SOIC	DW	20	2000	330.0	24.4	10.8	13.3	2.7	12.0	24.0	Q1
SN74AC373NSR	SOP	NS	20	2000	330.0	24.4	8.4	13.0	2.5	12.0	24.0	Q1
SN74AC373PWR	TSSOP	PW	20	2000	330.0	16.4	6.95	7.0	1.4	8.0	16.0	Q1

TAPE AND REEL BOX DIMENSIONS

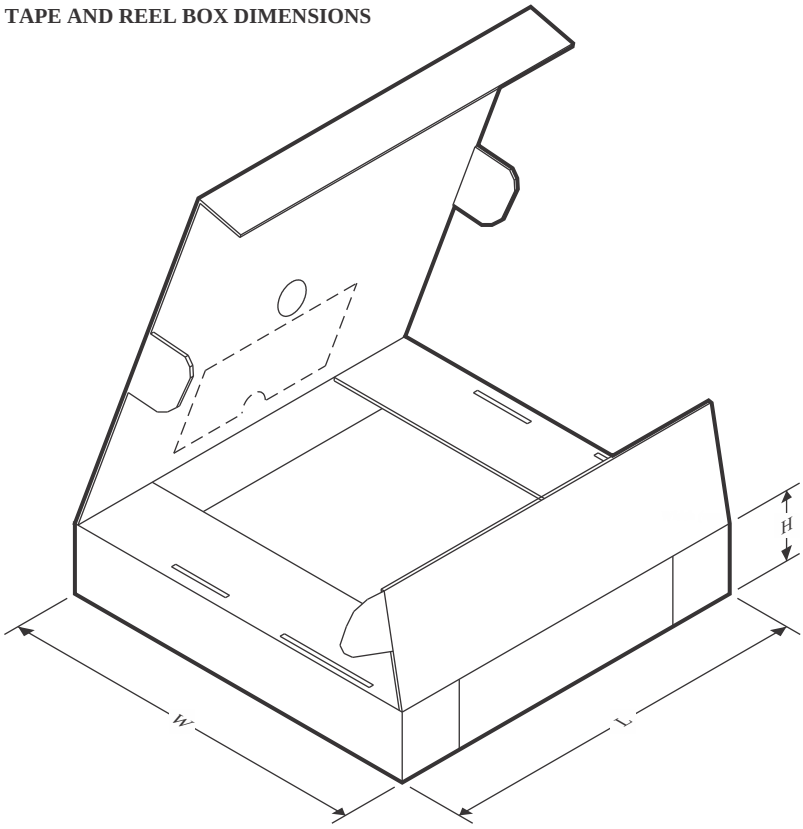

*All dimensions are nominal

Device	Package Type	Package Drawing	Pins	SPQ	Length (mm)	Width (mm)	Height (mm)
SN74AC373DBR	SSOP	DB	20	2000	353.0	353.0	32.0
SN74AC373DWR	SOIC	DW	20	2000	356.0	356.0	45.0
SN74AC373DWR	SOIC	DW	20	2000	356.0	356.0	45.0
SN74AC373NSR	SOP	NS	20	2000	356.0	356.0	45.0
SN74AC373PWR	TSSOP	PW	20	2000	353.0	353.0	32.0

TUBE

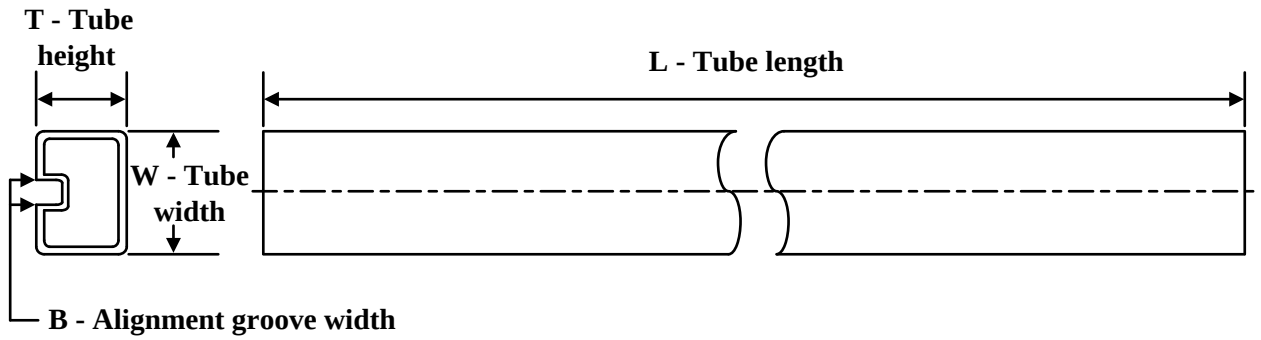

*All dimensions are nominal

Device	Package Name	Package Type	Pins	SPQ	L (mm)	W (mm)	T (µm)	B (mm)
5962-87555012A	FK	LCCC	20	55	506.98	12.06	2030	NA
5962-8755501SA	W	CFP	20	25	506.98	26.16	6220	NA
5962-8755501VSA	W	CFP	20	25	506.98	26.16	6220	NA
5962-8755501VSA.A	W	CFP	20	25	506.98	26.16	6220	NA
SN74AC373N	N	PDIP	20	20	506	13.97	11230	4.32
SN74AC373N.A	N	PDIP	20	20	506	13.97	11230	4.32
SN74AC373NE4	N	PDIP	20	20	506	13.97	11230	4.32
SNJ54AC373FK	FK	LCCC	20	55	506.98	12.06	2030	NA
SNJ54AC373FK.A	FK	LCCC	20	55	506.98	12.06	2030	NA
SNJ54AC373W	W	CFP	20	25	506.98	26.16	6220	NA
SNJ54AC373W.A	W	CFP	20	25	506.98	26.16	6220	NA

J (R–GDIP–T**)

14 LEADS SHOWN

CERAMIC DUAL IN–LINE PACKAGE

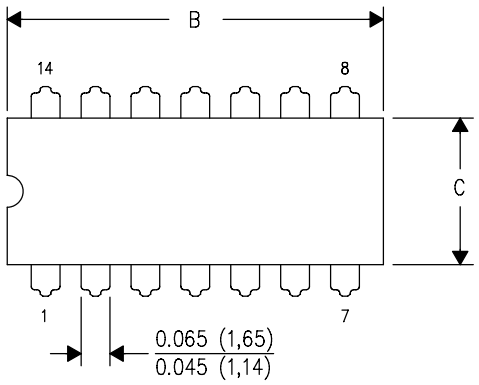

DIM \ PINS **	14	16	18	20
A	0.300 (7,62) BSC	0.300 (7,62) BSC	0.300 (7,62) BSC	0.300 (7,62) BSC
B MAX	0.785 (19,94)	.840 (21,34)	0.960 (24,38)	1.060 (26,92)
B MIN	—	—	—	—
C MAX	0.300 (7,62)	0.300 (7,62)	0.310 (7,87)	0.300 (7,62)
C MIN	0.245 (6,22)	0.245 (6,22)	0.220 (5,59)	0.245 (6,22)

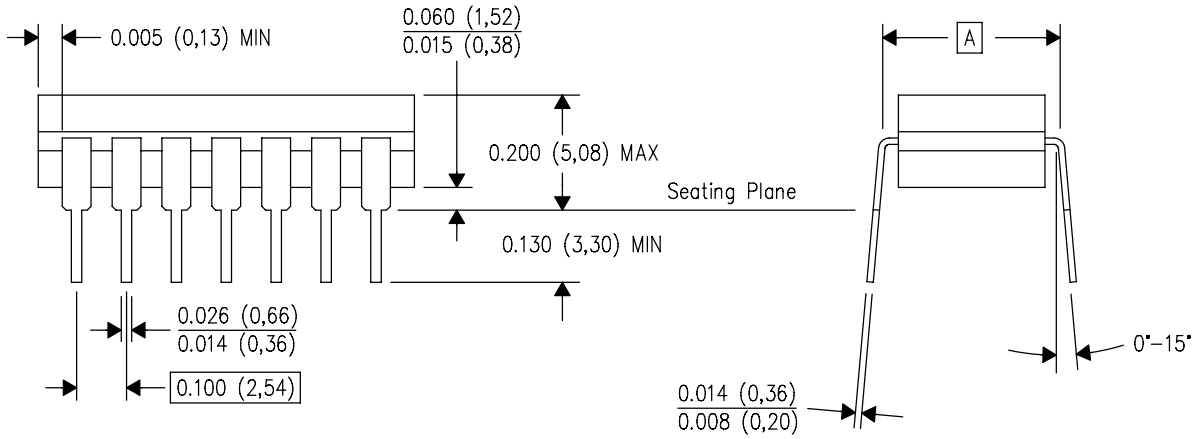

4040083/F 03/03

NOTES:
A. All linear dimensions are in inches (millimeters).
B. This drawing is subject to change without notice.
C. This package is hermetically sealed with a ceramic lid using glass frit.
D. Index point is provided on cap for terminal identification only on press ceramic glass frit seal only.
E. Falls within MIL STD 1835 GDIP1–T14, GDIP1–T16, GDIP1–T18 and GDIP1–T20.

GENERIC PACKAGE VIEW

FK 20

LCCC - 2.03 mm max height

8.89 x 8.89, 1.27 mm pitch

LEADLESS CERAMIC CHIP CARRIER

This image is a representation of the package family, actual package may vary.
Refer to the product data sheet for package details.

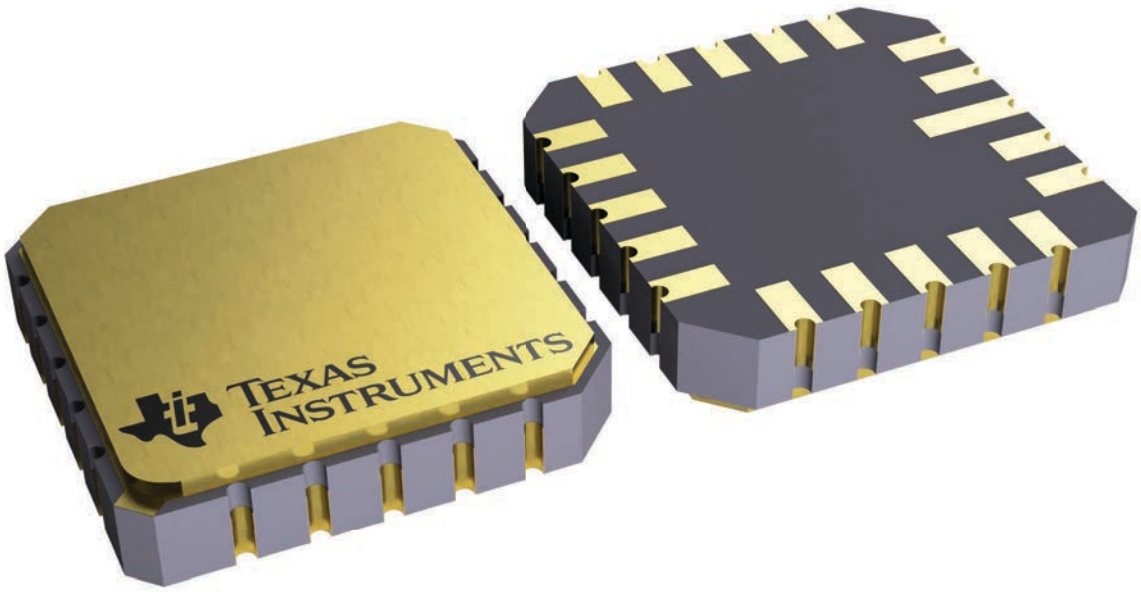

4229370VA\

N (R–PDIP–T**)

PLASTIC DUAL–IN–LINE PACKAGE

16 PINS SHOWN

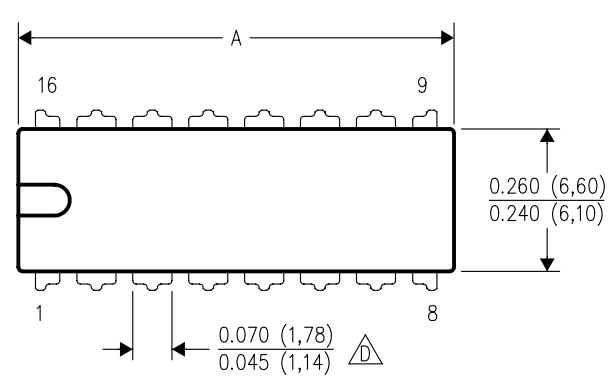

DIM \ PINS **	14	16	18	20
A MAX	0.775 (19,69)	0.775 (19,69)	0.920 (23,37)	1.060 (26,92)
A MIN	0.745 (18,92)	0.745 (18,92)	0.850 (21,59)	0.940 (23,88)
MS–001 VARIATION (C)	AA	BB	AC	AD

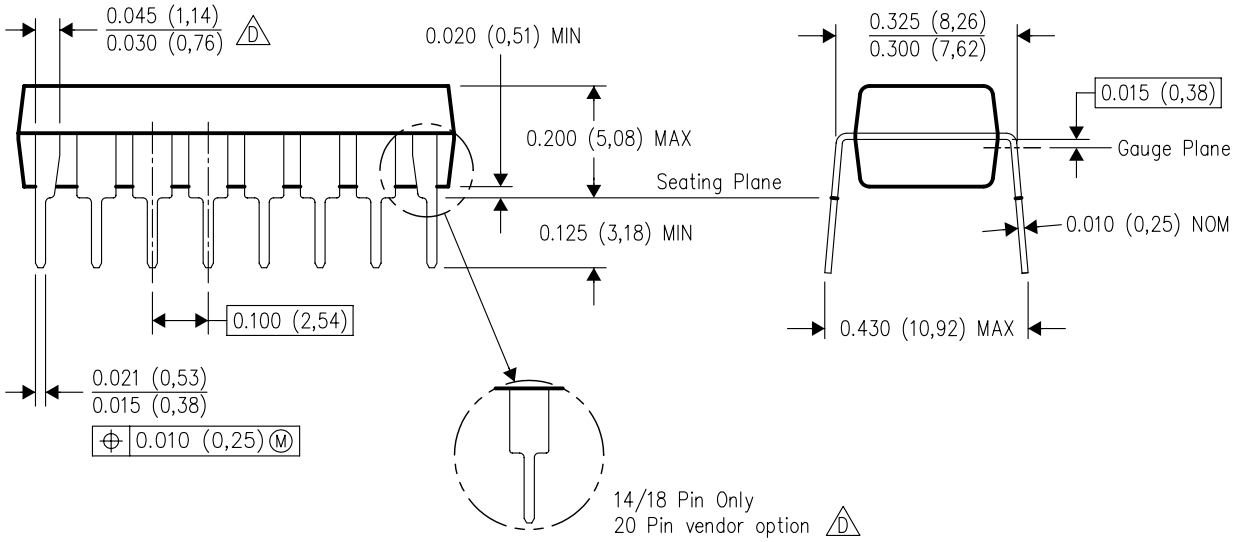

4040049/E 12/2002

NOTES:
A. All linear dimensions are in inches (millimeters).
B. This drawing is subject to change without notice.
C. Falls within JEDEC MS–001, except 18 and 20 pin minimum body length (Dim A).
D. The 20 pin end lead shoulder width is a vendor option, either half or full width.

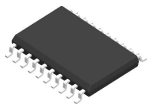

PACKAGE OUTLINE

DW0020A

SOIC - 2.65 mm max height

SOIC

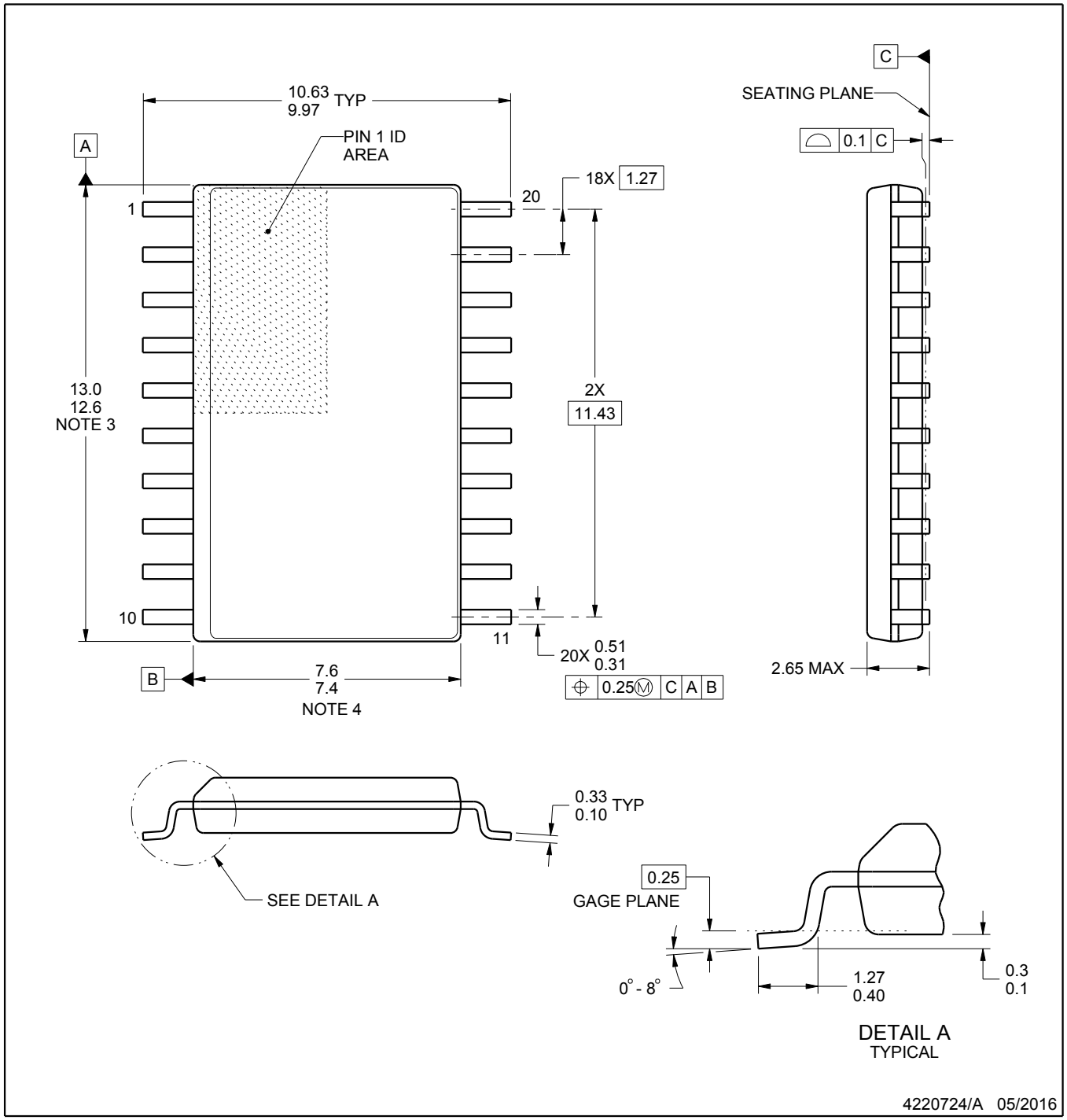

NOTES:

1. All linear dimensions are in millimeters. Dimensions in parenthesis are for reference only. Dimensioning and tolerancing per ASME Y14.5M.
2. This drawing is subject to change without notice.
3. This dimension does not include mold flash, protrusions, or gate burrs. Mold flash, protrusions, or gate burrs shall not exceed 0.15 mm per side.
4. This dimension does not include interlead flash. Interlead flash shall not exceed 0.43 mm per side.
5. Reference JEDEC registration MS-013.

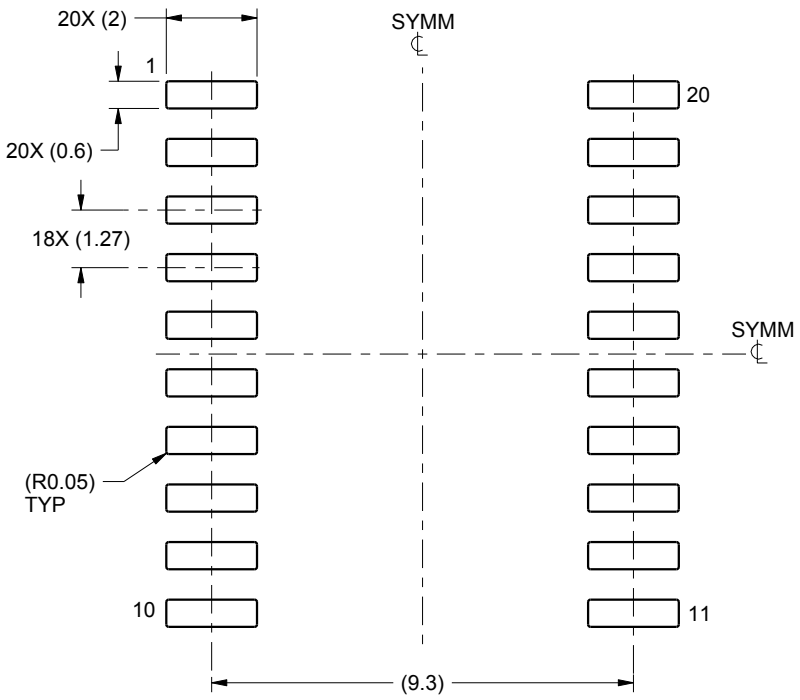

LAND PATTERN EXAMPLE
SCALE:6X

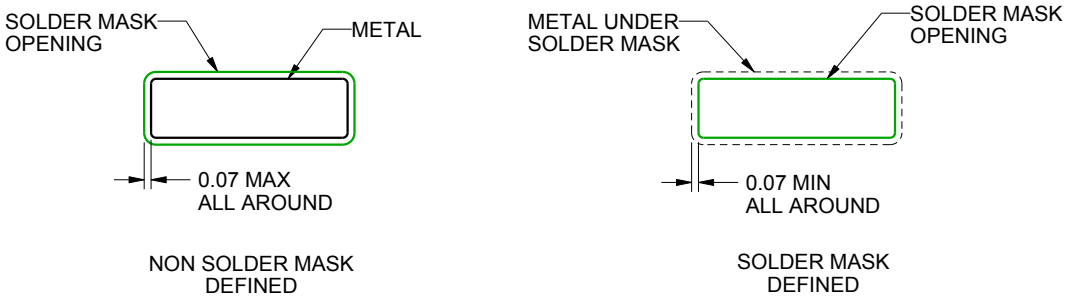

SOLDER MASK DETAILS

4220724/A 05/2016

NOTES: (continued)

6. Publication IPC-7351 may have alternate designs.
7. Solder mask tolerances between and around signal pads can vary based on board fabrication site.

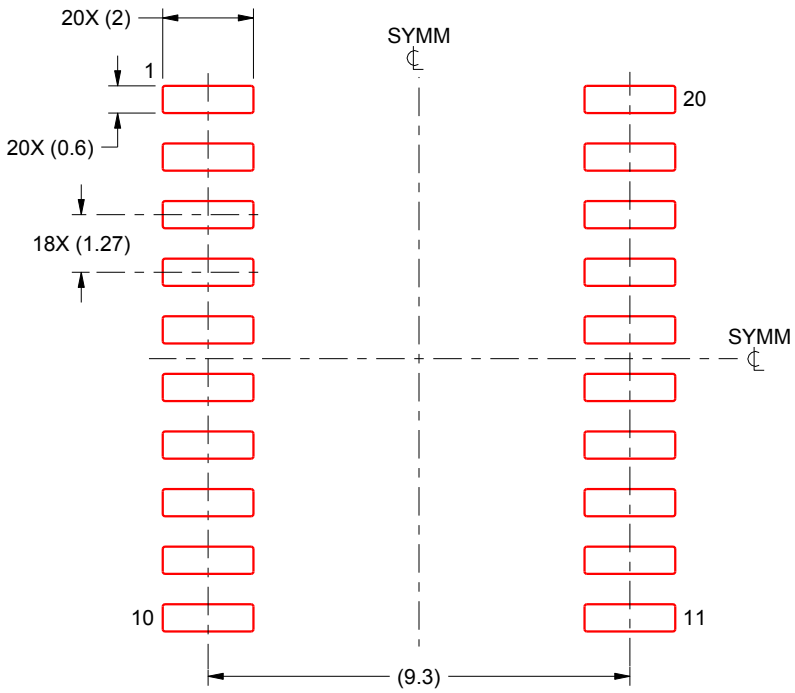

SOLDER PASTE EXAMPLE
BASED ON 0.125 mm THICK STENCIL
SCALE:6X

4220724/A 05/2016

NOTES: (continued)

8. Laser cutting apertures with trapezoidal walls and rounded corners may offer better paste release. IPC-7525 may have alternate design recommendations.
9. Board assembly site may have different recommendations for stencil design.

W (R–GDFP–F20) CERAMIC DUAL FLATPACK

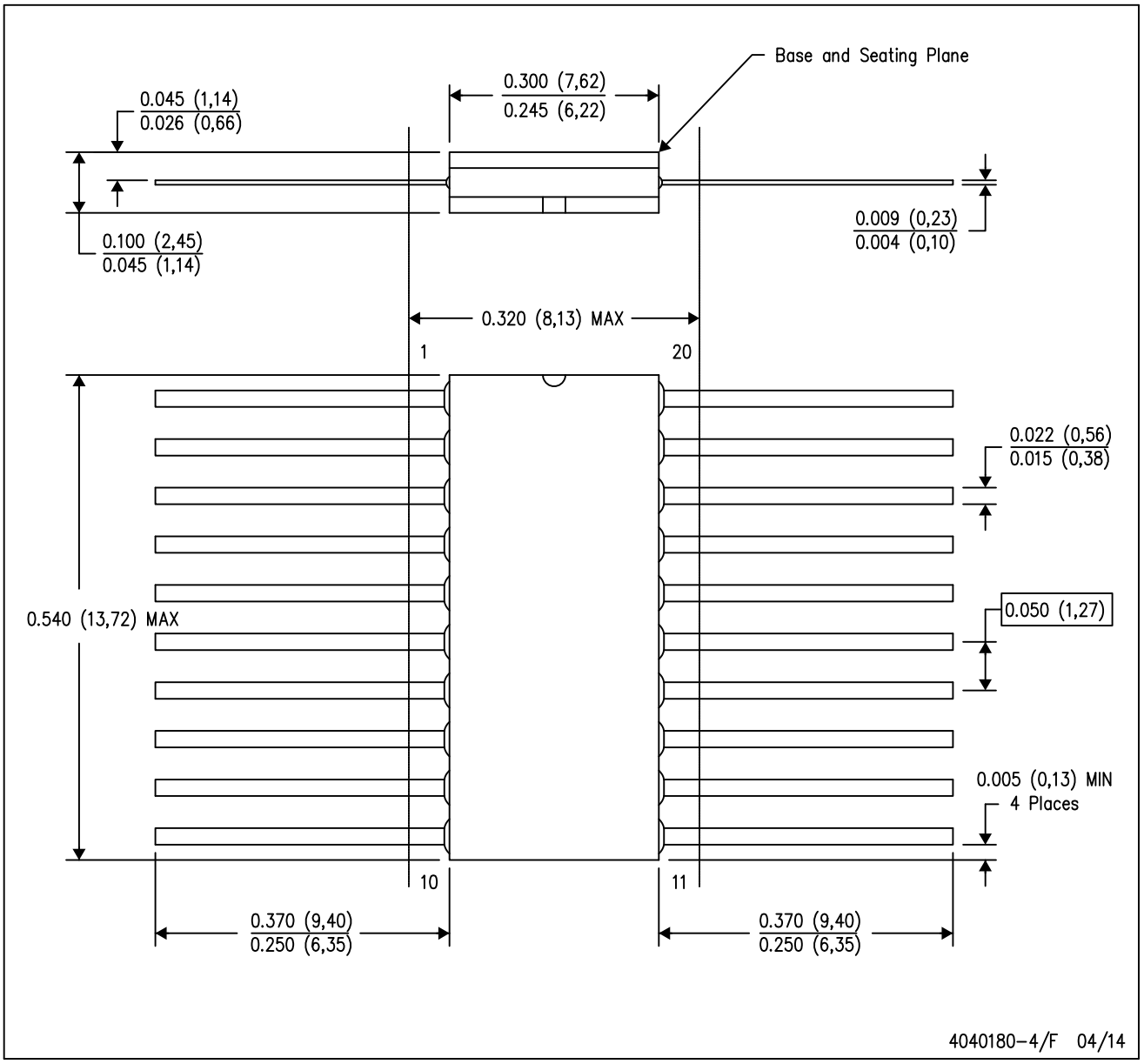

NOTES:
A. All linear dimensions are in inches (millimeters).
B. This drawing is subject to change without notice.
C. This package can be hermetically sealed with a ceramic lid using glass frit.
D. Index point is provided on cap for terminal identification only.
E. Falls within Mil–Std 1835 GDFP2–F20

PACKAGE OUTLINE

PW0020A

TSSOP - 1.2 mm max height

SMALL OUTLINE PACKAGE

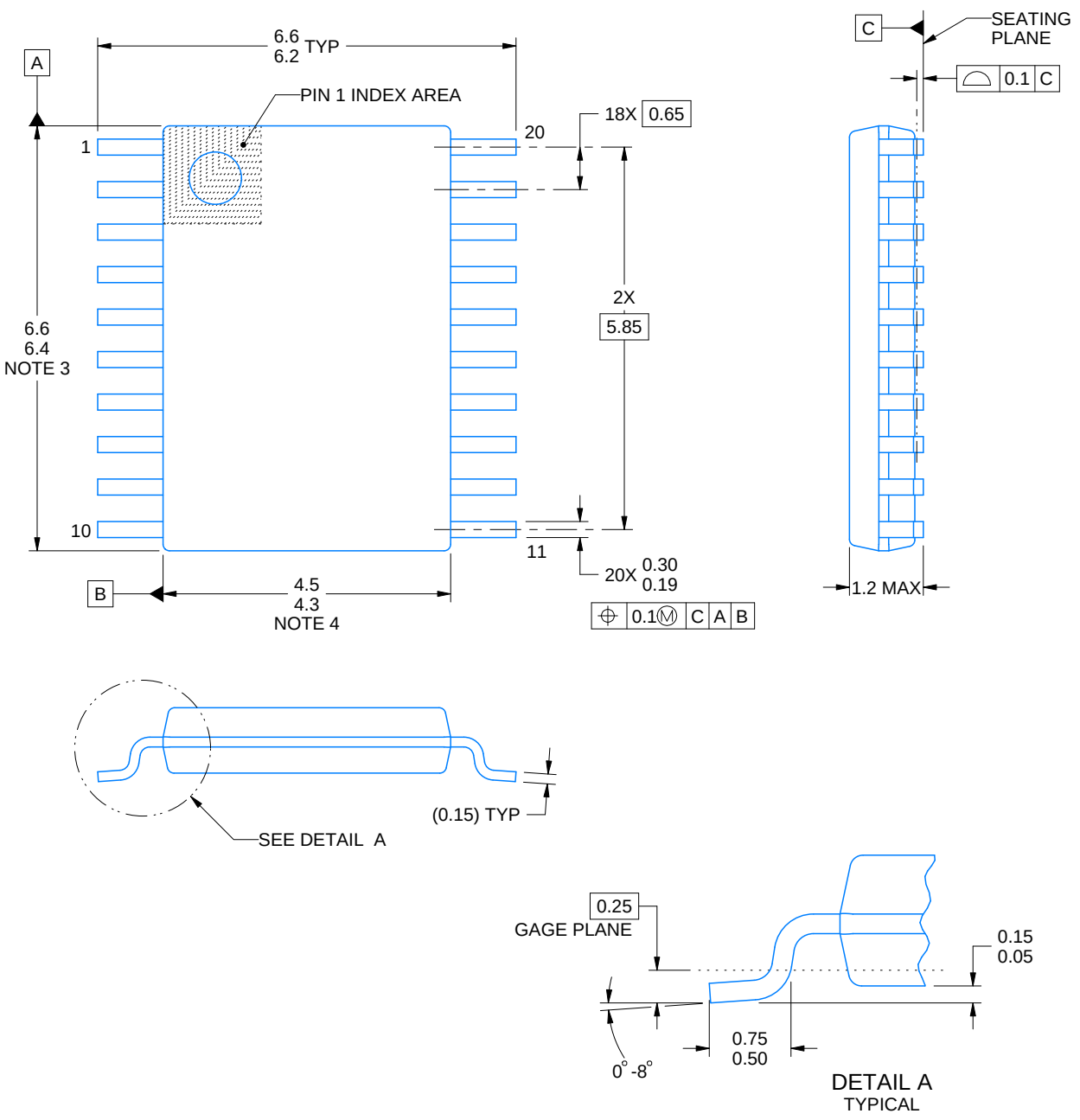

NOTES:

1. All linear dimensions are in millimeters. Any dimensions in parenthesis are for reference only. Dimensioning and tolerancing per ASME Y14.5M.
2. This drawing is subject to change without notice.
3. This dimension does not include mold flash, protrusions, or gate burrs. Mold flash, protrusions, or gate burrs shall not exceed 0.15 mm per side.
4. This dimension does not include interlead flash. Interlead flash shall not exceed 0.25 mm per side.
5. Reference JEDEC registration MO-153.

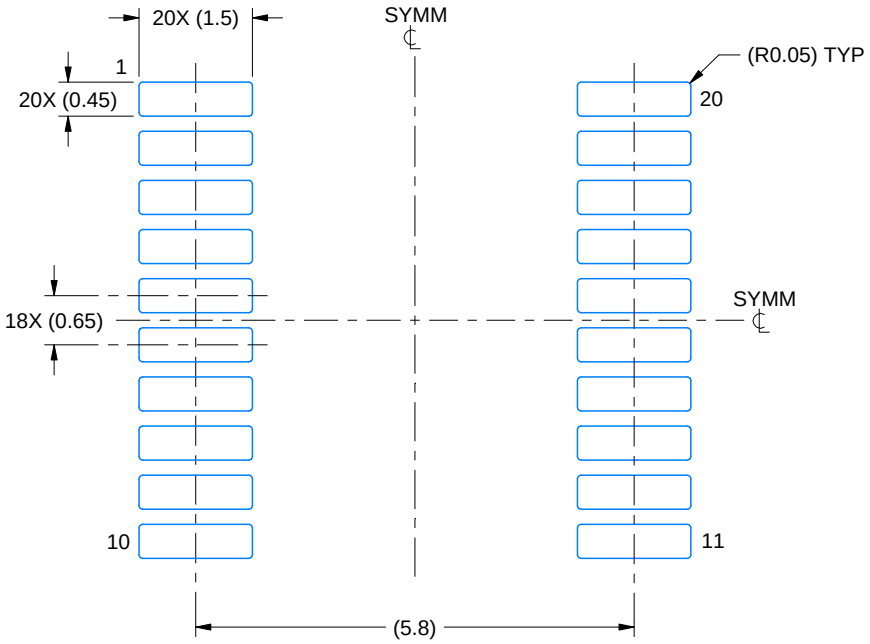

LAND PATTERN EXAMPLE
EXPOSED METAL SHOWN
SCALE: 10X



SOLDER MASK DETAILS

4220206/A 02/2017

NOTES: (continued)

6. Publication IPC-7351 may have alternate designs.
7. Solder mask tolerances between and around signal pads can vary based on board fabrication site.

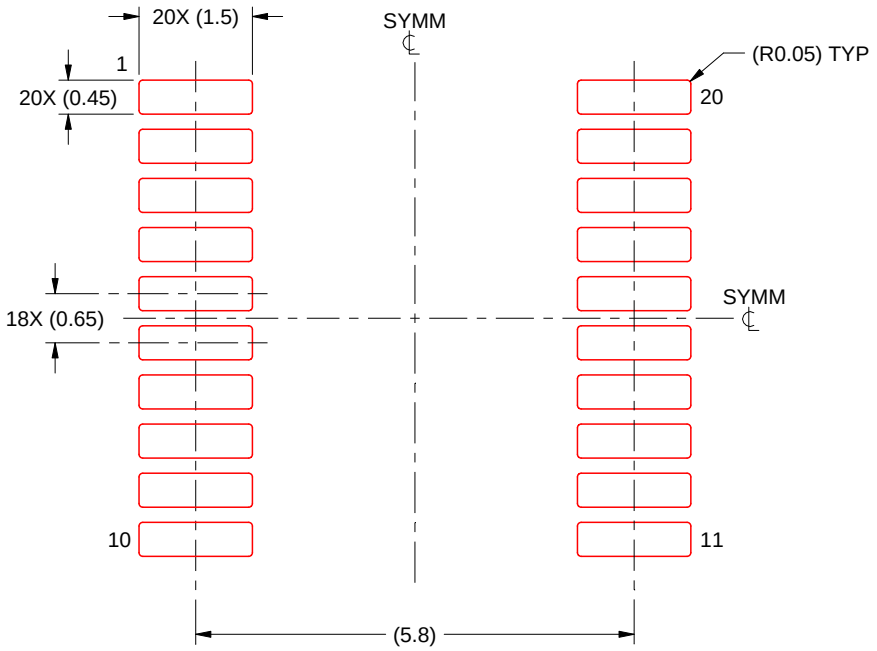

SOLDER PASTE EXAMPLE
BASED ON 0.125 mm THICK STENCIL
SCALE: 10X

4220206/A 02/2017

NOTES: (continued)

8. Laser cutting apertures with trapezoidal walls and rounded corners may offer better paste release. IPC-7525 may have alternate design recommendations.
9. Board assembly site may have different recommendations for stencil design.

PACKAGE OUTLINE

DB0020A

SSOP - 2 mm max height

SMALL OUTLINE PACKAGE

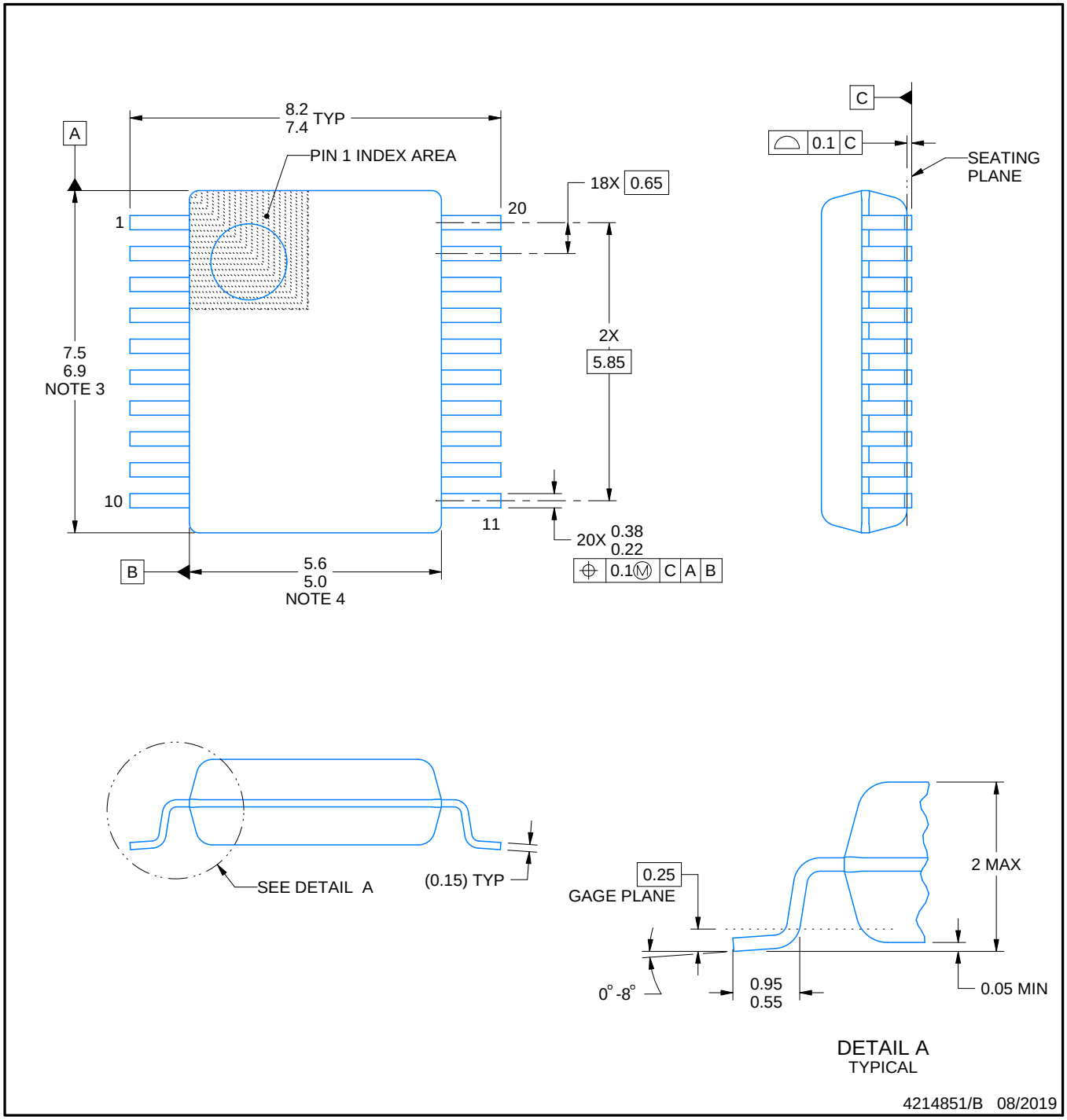

NOTES:

1. All linear dimensions are in millimeters. Any dimensions in parenthesis are for reference only. Dimensioning and tolerancing per ASME Y14.5M.
2. This drawing is subject to change without notice.
3. This dimension does not include mold flash, protrusions, or gate burrs. Mold flash, protrusions, or gate burrs shall not exceed 0.15 mm per side.
4. This dimension does not include interlead flash. Interlead flash shall not exceed 0.25 mm per side.
5. Reference JEDEC registration MO-150.

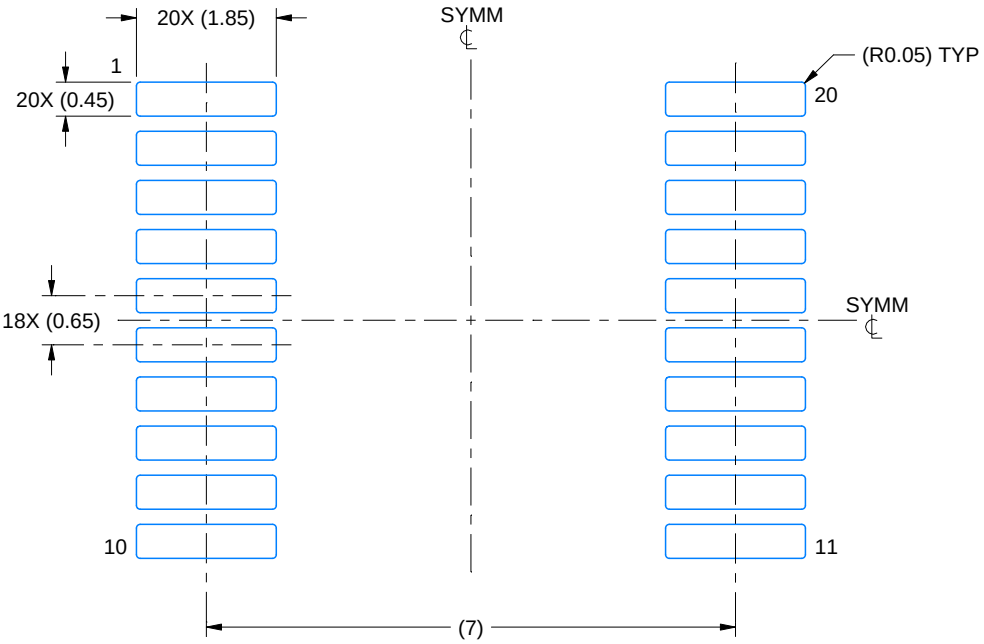

LAND PATTERN EXAMPLE
EXPOSED METAL SHOWN
SCALE: 10X

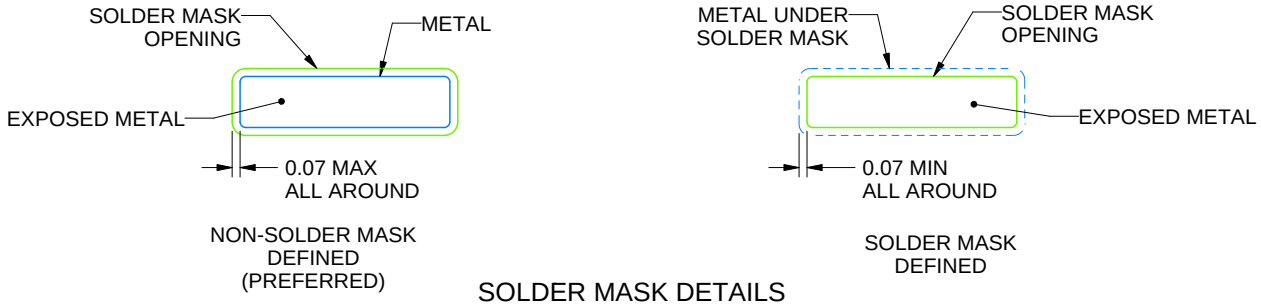

SOLDER MASK DETAILS

4214851/B 08/2019

NOTES: (continued)

6. Publication IPC-7351 may have alternate designs.
7. Solder mask tolerances between and around signal pads can vary based on board fabrication site.

EXAMPLE STENCIL DESIGN

DB0020A

SSOP - 2 mm max height

SMALL OUTLINE PACKAGE

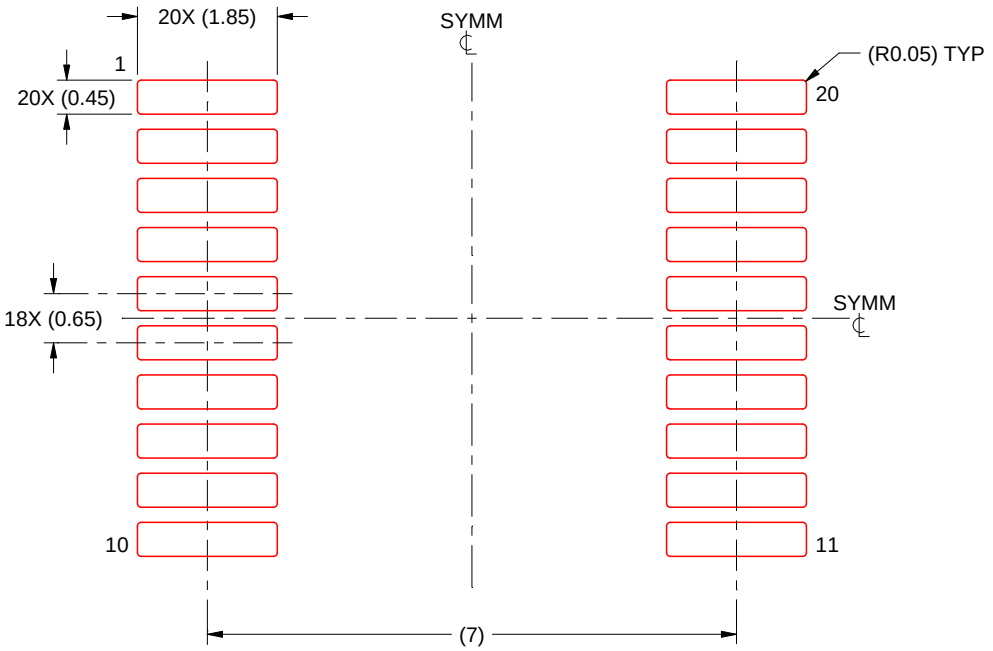

SOLDER PASTE EXAMPLE
BASED ON 0.125 mm THICK STENCIL
SCALE: 10X

4214851/B 08/2019

NOTES: (continued)

8. Laser cutting apertures with trapezoidal walls and rounded corners may offer better paste release. IPC-7525 may have alternate design recommendations.
9. Board assembly site may have different recommendations for stencil design.

MECHANICAL DATA

NS (R-PDSO-G)** **PLASTIC SMALL-OUTLINE PACKAGE**

14-PINS SHOWN

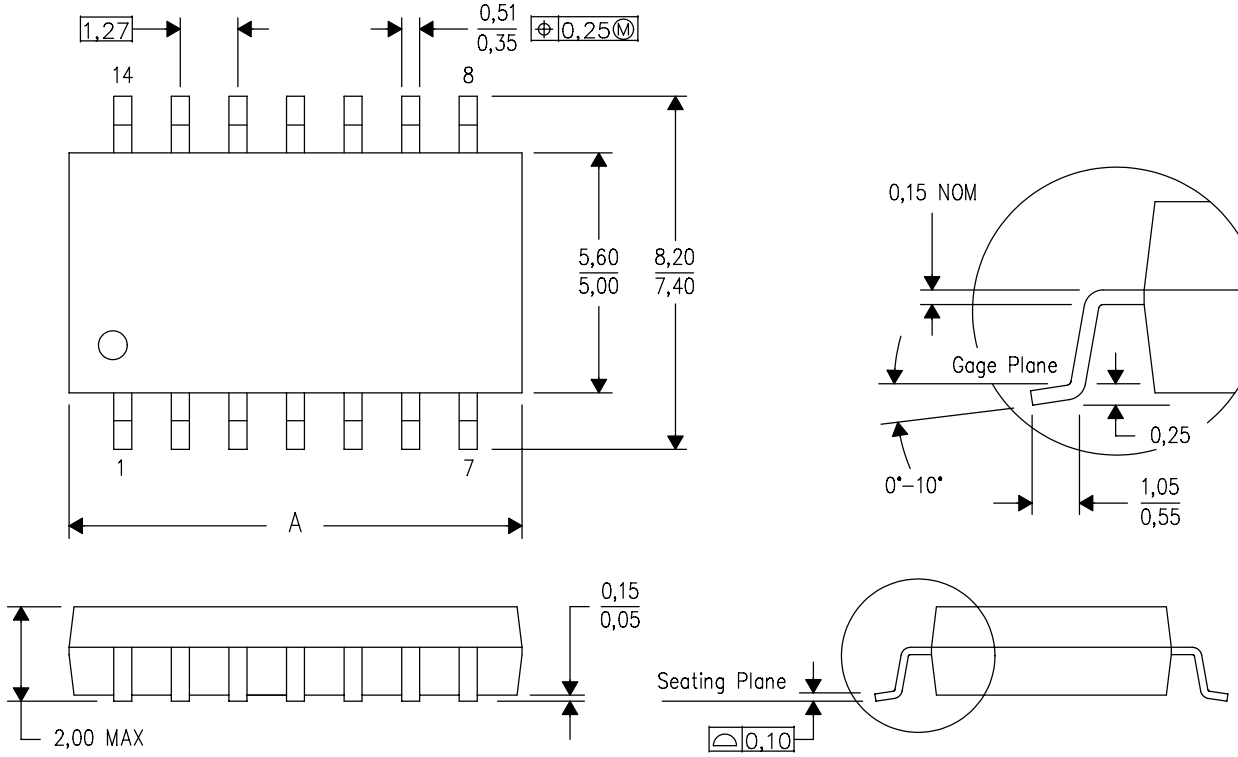

DIM \ PINS **	14	16	20	24
A MAX	10,50	10,50	12,90	15,30
A MIN	9,90	9,90	12,30	14,70

4040062/C 03/03

NOTES:
A. All linear dimensions are in millimeters.
B. This drawing is subject to change without notice.
C. Body dimensions do not include mold flash or protrusion, not to exceed 0,15.

IMPORTANT NOTICE AND DISCLAIMER

TI PROVIDES TECHNICAL AND RELIABILITY DATA (INCLUDING DATASHEETS), DESIGN RESOURCES (INCLUDING REFERENCE DESIGNS), APPLICATION OR OTHER DESIGN ADVICE, WEB TOOLS, SAFETY INFORMATION, AND OTHER RESOURCES “AS IS” AND WITH ALL FAULTS, AND DISCLAIMS ALL WARRANTIES, EXPRESS AND IMPLIED, INCLUDING WITHOUT LIMITATION ANY IMPLIED WARRANTIES OF MERCHANTABILITY, FITNESS FOR A PARTICULAR PURPOSE OR NON-INFRINGEMENT OF THIRD PARTY INTELLECTUAL PROPERTY RIGHTS.

These resources are intended for skilled developers designing with TI products. You are solely responsible for (1) selecting the appropriate TI products for your application, (2) designing, validating and testing your application, and (3) ensuring your application meets applicable standards, and any other safety, security, regulatory or other requirements.

These resources are subject to change without notice. TI grants you permission to use these resources only for development of an application that uses the TI products described in the resource. Other reproduction and display of these resources is prohibited. No license is granted to any other TI intellectual property right or to any third party intellectual property right. TI disclaims responsibility for, and you fully indemnify TI and its representatives against any claims, damages, costs, losses, and liabilities arising out of your use of these resources.

TI’s products are provided subject to TI’s Terms of Sale, TI’s General Quality Guidelines, or other applicable terms available either on ti.com or provided in conjunction with such TI products. TI’s provision of these resources does not expand or otherwise alter TI’s applicable warranties or warranty disclaimers for TI products. Unless TI explicitly designates a product as custom or customer-specified, TI products are standard, catalog, general purpose devices.

TI objects to and rejects any additional or different terms you may propose.

Copyright © 2026, Texas Instruments Incorporated

Last updated 10/2025