SNx4AHC541 Octal Buffers/Drivers With 3-State Outputs

1 Features

- Operating range 2V to 5.5V V_{CC}
- Latch-up performance exceeds 250mA per JESD 17
- On products compliant to MIL-PRF-38535, all parameters are tested unless otherwise noted. On all other products, production processing does not necessarily include testing of all parameters.

2 Applications

- Servers
- PCs and Notebooks
- Network Switches
- Wearable Health and Fitness Devices
- Telecom Infrastructures
- Electronic Points-of-Sale

3 Description

The SNx4AHC541 octal buffers and drivers are ideal for driving bus lines or buffer memory address registers. These devices feature inputs and outputs on opposite sides of the package to facilitate printed circuit board layout.

Device Information

PART NUMBER	PACKAGE(1)	PACKAGE SIZE(2)	BODY SIZE(3)
SNx4AHC541	N (PDIP, 20)	24.33mm x 9.4mm	25.40mm x 6.35mm
	NS (SOP, 20)	12.6mm x 7.8mm	12.6mm x 5.3mm
	DB (SSOP, 20)	7.2mm × 7.8mm	7.50mm x 5.30mm
	PW (TSSOP, 20)	6.50mm × 6.4mm	6.50mm x 4.40mm
	DGV (TVSOP, 20)	5.00mm x 6.4mm	5.00mm x 4.40mm
	DW (SOIC, 20)	12.80mm × 10.3mm	12.80mm x 7.50mm
	J (CDIP, 20)	24.2mm x 7.62mm	24.2mm x 6.92mm
	W (CFP, 20)	13.09mm x 8.13mm	13.09mm x 6.92mm
	FK (LCCC, 20)	8.89mm x 8.89mm	8.89mm x 8.89mm

(1) For more information, see Section 11.
(2) The package size (length × width) is a nominal value and includes pins, where applicable.
(3) The body size (length × width) is a nominal value and does not include pins.

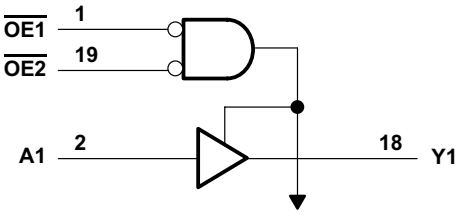

Simplified Block Diagram

An IMPORTANT NOTICE at the end of this data sheet addresses availability, warranty, changes, use in safety-critical applications, intellectual property matters and other important disclaimers. PRODUCTION DATA.

Table of Contents

1 Features....1
2 Applications....1
3 Description....1
4 Pin Configuration and Functions....3
5 Specifications....4
5.1 Absolute Maximum Ratings....4
5.2 ESD Ratings....4
5.3 Recommended Operating Conditions....4
5.4 Thermal Information....5
5.5 Electrical Characteristics....5
5.6 Switching Characteristics, V_{CC} = 3.3 V ± 0.3 V....6
5.7 Switching Characteristics, V_{CC} = 5 V ± 0.5 V....6
5.8 Noise Characteristics....7
5.9 Operating Characteristics....7
5.10 Typical Characteristics....7
6 Parameter Measurement Information....8
7 Detailed Description....9
7.1 Overview....9
7.2 Functional Block Diagram....9
7.3 Feature Description....9
7.4 Device Functional Modes....9
8 Application and Implementation....10
8.1 Application Information....10
8.2 Typical Application....10
8.3 Power Supply Recommendations....11
8.4 Layout....11
9 Device and Documentation Support....12
9.1 Documentation Support....12
9.2 Receiving Notification of Documentation Updates....12
9.3 Support Resources....12
9.4 Trademarks....12
9.5 Electrostatic Discharge Caution....12
9.6 Glossary....12
10 Revision History....12
11 Mechanical, Packaging, and Orderable Information....13

Copyright © 2025 Texas Instruments Incorporated

4 Pin Configuration and Functions

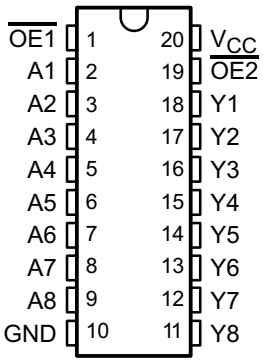

Figure 4-1. DB, PW, DGV, DW, N, or NS Package; 20-Pin, SSOP, TSSOP, TVSOP, SOIC, PDIP, or SOP (Top View)

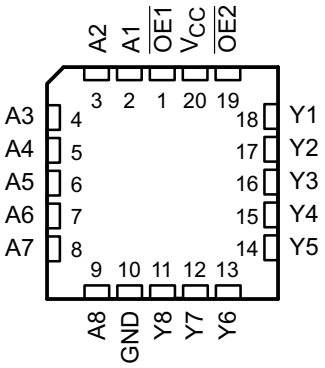

Figure 4-2. FK Package 20-Pin LCCC (Top View)

Table 4-1. Pin Functions

PIN		I/O	DESCRIPTION
NO.	NAME		
1	$\overline{OE1}$	I	Output Enable 1
2	A1	I	A1 Input
3	A2	I	A2 Input
4	A3	I	A3 Input
5	A4	I	A4 Input
6	A5	I	A5 Input
7	A6	I	A6 Input
8	A7	I	A7 Input
9	A8	I	A8 Input
10	GND	—	Ground
11	Y8	O	Y8 Output
12	Y7	O	Y7 Output
13	Y6	O	Y6 Output
14	Y5	O	Y5 Output
15	Y4	O	Y4 Output
16	Y3	O	Y3 Output
17	Y2	O	Y2 Output
18	Y1	O	Y1 Output
19	$\overline{OE2}$	I	Output Enable 2
20	V_{CC}	—	Power Pin

Copyright © 2025 Texas Instruments Incorporated

5 Specifications

5.1 Absolute Maximum Ratings

over operating free-air temperature range (unless otherwise noted)(1)

			MIN	MAX	UNIT
V_{CC}	Supply voltage		–0.5	7	V
V_I	Input voltage(2)		–0.5	7	V
V_O	Output voltage(2)		–0.5	V_{CC} + 0.5	V
I_{IK}	Input clamp current	V_I < 0		–20	mA
I_{OK}	Output clamp current	V_O < 0 or V_O > V_{CC}		±20	mA
I_O	Continuous output current	V_O = 0 to V_{CC}		±25	mA
	Continuous current through V_{CC} or GND			±75	mA
T_{stg}	Storage temperature		–65	150	°C

(1) Stresses beyond those listed under *Absolute Maximum Ratings* may cause permanent damage to the device. These are stress ratings only, which do not imply functional operation of the device at these or any other conditions beyond those indicated under *Recommended Operating Conditions*. Exposure to absolute-maximum-rated conditions for extended periods may affect device reliability.
(2) The input and output voltage ratings may be exceeded if the input and output current ratings are observed.

5.2 ESD Ratings

			VALUE	UNIT
$V_{(ESD)}$	Electrostatic discharge	Human body model (HBM), per ANSI/ESDA/JEDEC JS-001, all pins(1)	±2000	V
		Charged-device model (CDM), per JEDEC specification JESD22-C101, all pins(2)	±1000	

(1) JEDEC document JEP155 states that 500-V HBM allows safe manufacturing with a standard ESD control process.
(2) JEDEC document JEP157 states that 250-V CDM allows safe manufacturing with a standard ESD control process.

5.3 Recommended Operating Conditions

over operating free-air temperature range (unless otherwise noted)(1)

			SN54AHC541		SN74AHC541		UNIT
			MIN	MAX	MIN	MAX	
V_{CC}	Supply voltage		2	5.5	2	5.5	V
V_{IH}	High-level input voltage	V_{CC} = 2 V	1.5		1.5		V
		V_{CC} = 3 V	2.1		2.1		
		V_{CC} = 5.5 V	3.85		3.85		
V_{IL}	Low-level Input voltage	V_{CC} = 2 V		0.5		0.5	V
		V_{CC} = 3 V		0.9		0.9	
		V_{CC} = 5.5 V		1.65		1.65	
V_I	Input voltage		0	5.5	0	5.5	V
V_O	Output voltage		0	V_{CC}	0	V_{CC}	V
I_{OH}	High-level output current	V_{CC} = 2 V		–50		–50	μA
		V_{CC} = 3.3 V ± 0.3 V		–4		–4	mA
		V_{CC} = 5 V ± 0.5 V		–8		–8	
I_{OL}	Low-level output current	V_{CC} = 2 V		50		50	μA
		V_{CC} = 3.3 V ± 0.3 V		4		4	mA
		V_{CC} = 5 V ± 0.5 V		8		8	
Δt/Δv	Input transition rise or fall rate	V_{CC} = 3.3 V ± 0.3 V		100		100	ns/V
		V_{CC} = 5 V ± 0.5 V		20		20	
T_A	Operating free-air temperature		–55	125	–40	125	°C

(1) All unused inputs of the device must be held at V_{CC} or GND to ensure proper device operation. Refer to the TI application report, *Implications of Slow or Floating CMOS Inputs* (SCBA004).

Copyright © 2025 Texas Instruments Incorporated

5.4 Thermal Information

THERMAL METRIC[1]		SN74AHC541						UNIT
		DB (SSOP)	DGV (TVSOP)	DW (SOIC)	N (PDIP)	NS (SO)	PW (TSSOP)	
		20 PINS	20 PINS	20 PINS	20 PINS	20 PINS	20 PINS	
$R_{\theta JA}$	Junction-to-ambient thermal resistance	99.9	119.2	81.1	68.5	77.6	116.8	°C/W
$R_{\theta JC(top)}$	Junction-to-case (top) thermal resistance	61.7	34.5	48.6	48.5	42.7	58.5	
$R_{\theta JB}$	Junction-to-board thermal resistance	55.2	60.7	53.8	44.9	45.7	78.7	
ψ_{JT}	Junction-to-top characterization parameter	22.6	1.2	19.5	28.0	10.2	12.6	
ψ_{JB}	Junction-to-board characterization parameter	54.8	60.0	53.1	44.5	45.2	77.9	
$R_{\theta JC(bot)}$	Junction-to-case (bottom) thermal resistance	N/A	N/A	N/A	N/A	N/A	N/A	

(1) For more information about traditional and new thermal metrics, see the *Semiconductor and IC Package Thermal Metrics* application report (SPRA953).

5.5 Electrical Characteristics

over operating free-air temperature range (unless otherwise noted)

PARAMETER	TEST CONDITIONS	V_{CC}	T_A = 25°C			SN54AHC541		SN74AHC541		SN74AHC541 –40°C to 125°C		UNIT
			MIN	TYP	MAX	MIN	MAX	MIN	MAX	MIN	MAX	
V_{OH}	I_{OH} = –50 µA	2 V	1.9	2		1.9		1.9		1.9		V
		3 V	2.9	3		2.9		2.9		2.9		
		4.5 V	4.4	4.5		4.4		4.4		4.4		
	I_{OH} = –4 mA	3 V	2.58			2.48		2.48		2.48		
	I_{OH} = –8 mA	4.5 V	3.94			3.8		3.8		3.8		
V_{OL}	I_{OL} = 50 µA	2 V			0.1		0.1		0.1		0.1	V
		3 V			0.1		0.1		0.1		0.1	
		4.5 V			0.1		0.1		0.1		0.1	
	I_{OH} = 4 mA	3 V			0.36		0.5		0.44		0.5	
	I_{OH} = 8 mA	4.5 V			0.36		0.5		0.44		0.5	
I_I	V_I = 5.5 V or GND	0 V to 5.5 V			±0.1		±1[1]		±1		±1	µA
I_{OZ} [2]	$V_O = V_{CC}$ or GND V_I ($\overline{OE}$) = V_{IL} or V_{IH}	5.5 V			±0.25		±2.5		±2.5		±2.5	µA
I_{CC}	$V_I = V_{CC}$ or GND I_O = 0	5.5 V			4		40		40		20	µA
C_i	$V_I = V_{CC}$ or GND	5 V		2	10				10			pF
C_O	$V_O = V_{CC}$ or GND	5 V		4								pF

(1) On products compliant to MIL-PRF-38535, this parameter is not production tested at V_{CC} = 0 V.
(2) For input and output pins, I_{OZ} includes the input leakage current.

Copyright © 2025 Texas Instruments Incorporated

5.6 Switching Characteristics, V_{CC} = 3.3 V ± 0.3 V

over recommended operating free-air temperature range (unless otherwise noted) (see Load Circuit and Voltage Waveforms)

PARAMETER	FROM (INPUT)	TO (OUTPUT)	LOAD CAPACITANCE	T_A = 25°C		SN54AHC541		SN74AHC541		SN74AHC541 T_A = –40°C to 125°C		UNIT
				TYP	MAX	MIN	MAX	MIN	MAX	MIN	MAX	
t_{PLH}	A	Y	C_L = 15 pF	5(1)	7(1)	1(1)	8.5(1)	1	8.5	1	8.5	ns
t_{PHL}				5(1)	7(1)	1(1)	8.5(1)	1	8.5	1	8.5	
t_{PZH}	$\overline{OE}$	Y	C_L = 15 pF	6(1)	10.5(1)	1(1)	11(1)	1	11	1	11	ns
t_{PZL}				6(1)	10.5(1)	1(1)	11(1)	1	11	1	11	
t_{PHZ}	$\overline{OE}$	Y	C_L = 15 pF	7(1)	11(1)	1(1)	12(1)	1	12	1	12	ns
t_{PLZ}				7(1)	11(1)	1(1)	12(1)	1	12	1	12	
t_{PLH}	A	Y	C_L = 50 pF	7.5	10.5	1	12	1	12	1	12	ns
t_{PHL}				7.5	10.5	1	12	1	12	1	12	
t_{PZH}	$\overline{OE}$	Y	C_L = 50 pF	8	14	1	16	1	16	1	16	ns
t_{PZL}				8	14	1	16	1	16	1	16	
t_{PHZ}	$\overline{OE}$	Y	C_L = 50 pF	9	15.4	1	17.5	1	17.5	1	17.5	ns
t_{PLZ}				9	15.4	1	17.5	1	17.5	1	17.5	
$t_{sk(o)}$			C_L = 50 pF		1.5(2)				1.5			ns
t_{PLH}	A or B	Y	C_L = 50 pF	6.3	8.8	1	10	1	10	1	10	ns
t_{PHL}				6.3	8.8	1	10	1	10	1	10	

(1) On products compliant to MIL-PRF-38535, this parameter is not production tested.
(2) On products compliant to MIL-PRF-38535, this parameter does not apply.

5.7 Switching Characteristics, V_{CC} = 5 V ± 0.5 V

over recommended operating free-air temperature range (unless otherwise noted) (see Load Circuit and Voltage Waveforms)

PARAMETER	FROM (INPUT)	TO (OUTPUT)	LOAD CAPACITANCE	T_A = 25°C		SN54AHC541		SN74AHC541		T_A = –40°C to 125°C SN74AHC541		UNIT
				TYP	MAX	MIN	MAX	MIN	MAX	MIN	MAX	
t_{PLH}	A	Y	C_L = 15 pF	3.5(1)	5(1)	1(1)	6(1)	1	6	1	6	ns
t_{PHL}				3.5(1)	5(1)	1(1)	6(1)	1	6	1	6	
t_{PZH}	$\overline{OE}$	Y	C_L = 15 pF	4.7(1)	7.2(1)	1(1)	8.5(1)	1	8.5	1	8.5	ns
t_{PZL}				4.7(1)	7.2(1)	1(1)	8.5(1)	1	8.5	1	8.5	
t_{PHZ}	$\overline{OE}$	Y	C_L = 15 pF	5(1)	7.5(1)	1(1)	8(1)	1	8	1	8	ns
t_{PLZ}				5(1)	7.5(1)	1(1)	8(1)	1	8	1	8	
t_{PLH}	A	Y	C_L = 50 pF	5	7	1	8	1	8	1	8	ns
t_{PHL}				5	7	1	8	1	8	1	8	
t_{PZH}	$\overline{OE}$	Y	C_L = 50 pF	6.2	9.2	1	10.5	1	10.5	1	10.5	ns
t_{PZL}				6.2	9.2	1	10.5	1	10.5	1	10.5	
t_{PHZ}	$\overline{OE}$	Y	C_L = 50 pF	6	8.8	1	10	1	10	1	10	ns
t_{PLZ}				6	8.8	1	10	1	10	1	10	
$t_{sk(o)}$			C_L = 50 pF		1(2)	1			1			ns

(1) On products compliant to MIL-PRF-38535, this parameter is not production tested.
(2) On products compliant to MIL-PRF-38535, this parameter does not apply.

Copyright © 2025 Texas Instruments Incorporated

5.8 Noise Characteristics

V_{CC} = 5 V, C_L = 50 pF, T_A = 25°C(1)

PARAMETER		SN74AHC541		UNIT
		MIN	MAX	
$V_{OL(P)}$	Quiet output, maximum dynamic V_{OL}		0.8	V
$V_{OL(V)}$	Quiet output, minimum dynamic V_{OL}		–0.8	V
$V_{OH(V)}$	Quiet output, minimum dynamic V_{OH}	4.7		V
$V_{IH(D)}$	High-level dynamic input voltage	3.5		V
$V_{IL(D)}$	Low-level dynamic input voltage		1.5	V

(1) Characteristics are for surface-mount packages only.

5.9 Operating Characteristics

V_{CC} = 5 V, T_A = 25°C

PARAMETER		TEST CONDITIONS		TYP	UNIT
C_{pd}	Power dissipation capacitance	No load,	f = 1 MHz	12	pF

5.10 Typical Characteristics

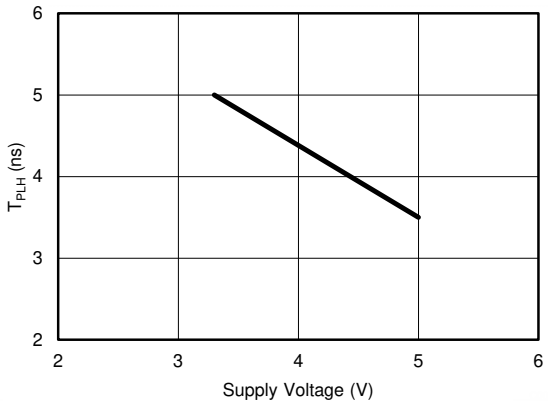

Figure 5-1. T_{PD} (Typical) vs V_{CC} at C_L = 15pF & T_A = 25°C

6 Parameter Measurement Information

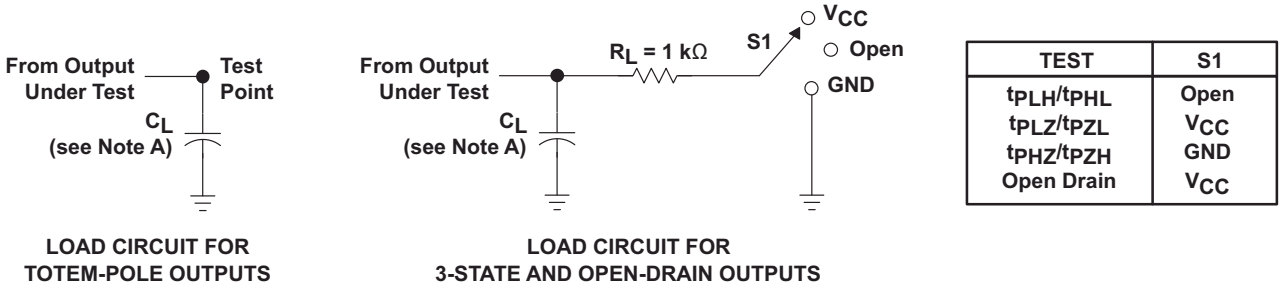

LOAD CIRCUIT FOR TOTEM-POLE OUTPUTS

LOAD CIRCUIT FOR 3-STATE AND OPEN-DRAIN OUTPUTS

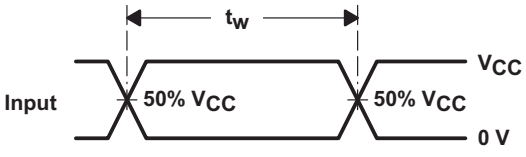

VOLTAGE WAVEFORMS PULSE DURATION

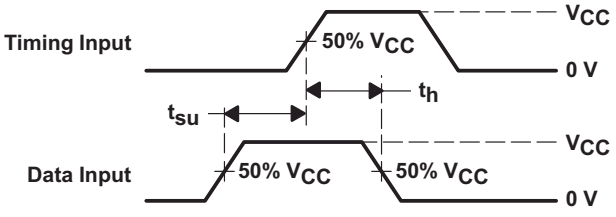

VOLTAGE WAVEFORMS SETUP AND HOLD TIMES

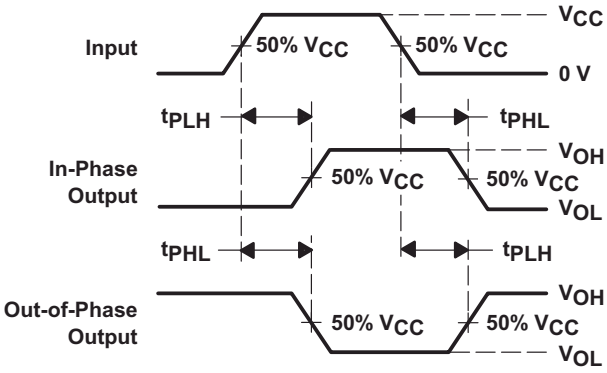

VOLTAGE WAVEFORMS PROPAGATION DELAY TIMES INVERTING AND NONINVERTING OUTPUTS

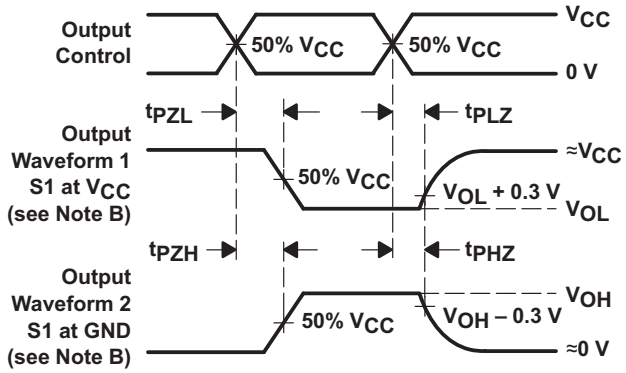

VOLTAGE WAVEFORMS ENABLE AND DISABLE TIMES LOW- AND HIGH-LEVEL ENABLING

NOTES: A. C_L includes probe and jig capacitance.
B. Waveform 1 is for an output with internal conditions such that the output is low except when disabled by the output control. Waveform 2 is for an output with internal conditions such that the output is high except when disabled by the output control.
C. All input pulses are supplied by generators having the following characteristics: PRR ≤ 1 MHz, Z_O = 50 Ω, t_r ≤ 3 ns, t_f ≤ 3 ns.
D. The outputs are measured one at a time with one input transition per measurement.
E. All parameters and waveforms are not applicable to all devices.

Figure 6-1. Load Circuit and Voltage Waveforms

Copyright © 2025 Texas Instruments Incorporated

7 Detailed Description

7.1 Overview

The SNx4AHC541 octal buffers/drivers are ideal for driving bus lines or buffer memory address registers. These devices feature inputs and outputs on opposite sides of the package to facilitate printed circuit board layout.

The 3-state control gate is a two-input AND gate with active-low inputs. If either output-enable ($\overline{OE1}$ or $\overline{OE2}$) input is high, all corresponding outputs are in the high-impedance state. The outputs provide noninverted data when they are not in the high-impedance state.

To ensure the high-impedance state during power up or power down, $\overline{OE}$ should be tied to V_{CC} through a pullup resistor. The minimum value of the resistor is determined by the current-sinking capability of the driver.

7.2 Functional Block Diagram

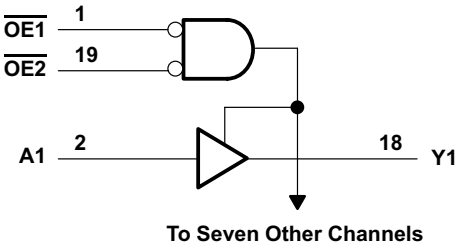

7.3 Feature Description

The SNx4AHC541 has a wide operating voltage range of 2 V to 5.5 V. It allows down voltage translations while accepting input voltages of up to 5.5 V. The slow edges of the SNx4AHC541 enables the reduction of output ringing.

7.4 Device Functional Modes

Table 7-1 lists the functional modes for the SNx4AHC541 devices.

Table 7-1. Function Table (Each Buffer/Driver)

INPUTS			OUTPUT Y
$\overline{OE1}$	$\overline{OE2}$	A	
L	L	L	L
L	L	H	H
H	X	X	Z
X	H	X	Z

Copyright © 2025 Texas Instruments Incorporated

8 Application and Implementation

Note

Information in the following applications sections is not part of the TI component specification, and TI does not warrant its accuracy or completeness. TI's customers are responsible for determining suitability of components for their purposes, as well as validating and testing their design implementation to confirm system functionality.

8.1 Application Information

The SN74AHC541 is a low-drive CMOS device that can be used for a multitude of bus interface type applications where output ringing is a concern. The low drive and slow edge rates will minimize overshoot and undershoot on the outputs. The inputs accept voltages up to 5.5 V, which allows down translation to the V_{CC} level. Figure 8-2 shows how the slower edges can reduce ringing on the output compared to higher drive parts like AC.

8.2 Typical Application

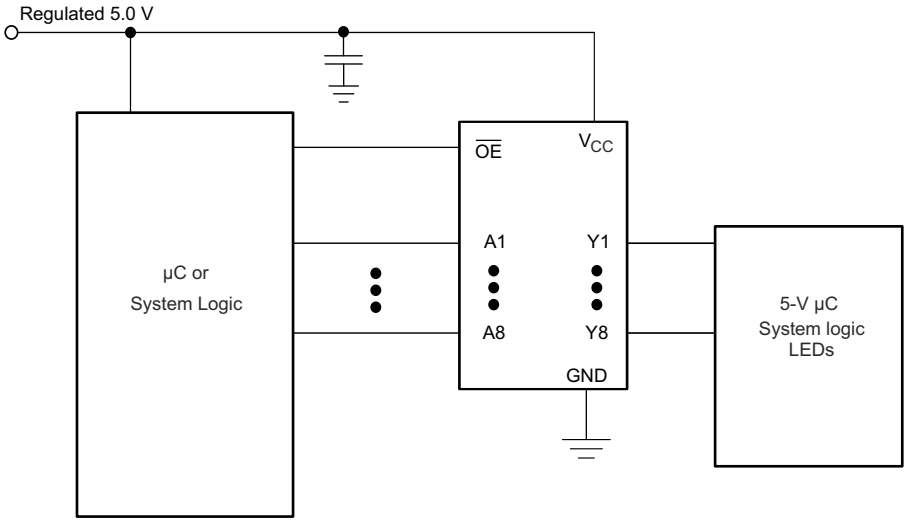

Figure 8-1. Typical Application Schematic

8.2.1 Design Requirements

This device uses CMOS technology and has balanced output drive. Take care to avoid bus contention because it can drive currents that would exceed maximum limits. The high drive will also create fast edges into light loads so routing and load conditions should be considered to prevent ringing.

8.2.2 Detailed Design Procedure

1. Recommended Input Conditions:
   - For rise time and fall time specifications, see Δt/ΔV in the *Section 5.3* table.
   - For specified high and low levels, see V_{IH} and V_{IL} in the *Section 5.3* table.
   - Inputs are overvoltage tolerant allowing them to go as high as 5.5 V at any valid V_{CC}.
2. Recommended Output Conditions:
   - Load currents should not exceed 25 mA per output and 75 mA total for the part.
   - Outputs should not be pulled above V_{CC}.

Copyright © 2025 Texas Instruments Incorporated

8.2.3 Application Curve

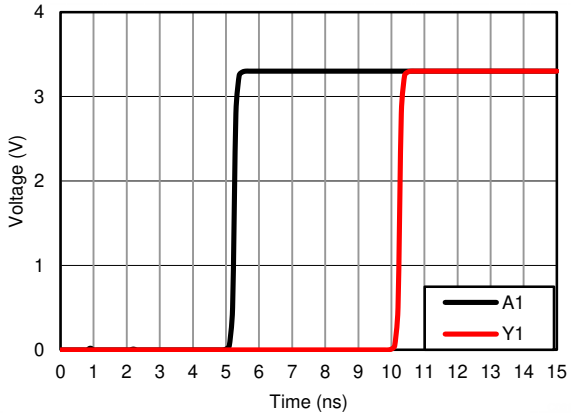

V_{cc} = 3.3 V, C_L = 15 pF, T_A = 25°C

Figure 8-2. Simulated Propagation Delay From Input (A1) to Output (Y1)

8.3 Power Supply Recommendations

8.4 Layout

8.4.1 Layout Guidelines

When using multiple bit logic devices, inputs should not float. In many cases, functions or parts of functions of digital logic devices are unused. Some examples are when only two inputs of a triple-input AND gate are used, or when only 3 of the 4-buffer gates are used. Such input pins should not be left unconnected because the undefined voltages at the outside connections result in undefined operational states. Specified in the Figure 8-3 are rules that must be observed under all circumstances. All unused inputs of digital logic devices must be connected to a high or low bias to prevent them from floating. The logic level that should be applied to any particular unused input depends on the function of the device. Generally they will be tied to GND or V_{CC}, whichever makes more sense or is more convenient. It is acceptable to float outputs unless the part is a transceiver. If the transceiver has an output enable pin, it will disable the outputs section of the part when asserted. This will not disable the input section of the I/Os so they also cannot float when disabled.

8.4.2 Layout Example

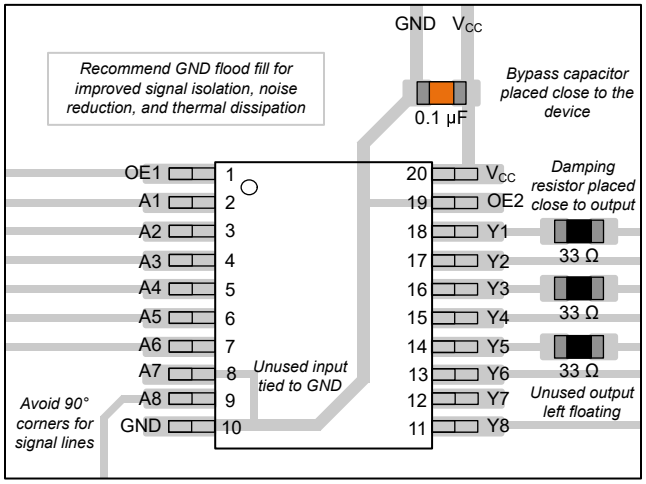

Figure 8-3. Example Layout for the SN74AHC541

9 Device and Documentation Support

9.1 Documentation Support

9.1.1 Related Links

The table below lists quick access links. Categories include technical documents, support and community resources, tools and software, and quick access to sample or buy.

Table 9-1. Related Links

PARTS	PRODUCT FOLDER	SAMPLE & BUY	TECHNICAL DOCUMENTS	TOOLS & SOFTWARE	SUPPORT & COMMUNITY
SN74AHC541	Click here	Click here	Click here	Click here	Click here
SN54AHC541	Click here	Click here	Click here	Click here	Click here

9.2 Receiving Notification of Documentation Updates

To receive notification of documentation updates, navigate to the device product folder on ti.com. Click on *Notifications* to register and receive a weekly digest of any product information that has changed. For change details, review the revision history included in any revised document.

9.3 Support Resources

TI E2E™ support forums are an engineer's go-to source for fast, verified answers and design help — straight from the experts. Search existing answers or ask your own question to get the quick design help you need.

Linked content is provided "AS IS" by the respective contributors. They do not constitute TI specifications and do not necessarily reflect TI's views; see TI's Terms of Use.

9.4 Trademarks

TI E2E™ is a trademark of Texas Instruments.
All trademarks are the property of their respective owners.

9.5 Electrostatic Discharge Caution



This integrated circuit can be damaged by ESD. Texas Instruments recommends that all integrated circuits be handled with appropriate precautions. Failure to observe proper handling and installation procedures can cause damage.

ESD damage can range from subtle performance degradation to complete device failure. Precision integrated circuits may be more susceptible to damage because very small parametric changes could cause the device not to meet its published specifications.

9.6 Glossary

TI Glossary — This glossary lists and explains terms, acronyms, and definitions.

10 Revision History

Changes from Revision P (August 2024) to Revision Q (January 2025)	Page
• Updated HBM and CDM values in *ESD Ratings* table	4

Changes from Revision O (September 2015) to Revision P (August 2024)	Page
• Added package size to *Device Information* table	1
• Updated structural layout of data sheet to current standards	1
• Updated RθJA values: PW = 105.4 to 116.8, DW = 83.0 to 81.1, N = 54.9 to 68.5, NS = 80.4 to 77.6; Updated PW, DW, N, and NS packages for RθJC(top), RθJB, ΨJT, ΨJB, and RθJC(bot), all values in °C/W	5
• Updated *Layout Example* image	11

Copyright © 2025 Texas Instruments Incorporated

11 Mechanical, Packaging, and Orderable Information

The following pages include mechanical, packaging, and orderable information. This information is the most current data available for the designated devices. This data is subject to change without notice and revision of this document. For browser-based versions of this data sheet, refer to the left-hand navigation.

Copyright © 2025 Texas Instruments Incorporated

PACKAGING INFORMATION

Orderable part number	Status (1)	Material type (2)	Package | Pins	Package qty | Carrier	RoHS (3)	Lead finish/ Ball material (4)	MSL rating/ Peak reflow (5)	Op temp (°C)	Part marking (6)
5962-9685701Q2A	NRND	Production	LCCC (FK) | 20	55 | TUBE	No	SNPB	N/A for Pkg Type	-55 to 125	5962-9685701Q2A SNJ54AHC541FK
5962-9685701QRA	Active	Production	CDIP (J) | 20	20 | TUBE	No	SNPB	N/A for Pkg Type	-55 to 125	5962-9685701QRA SNJ54AHC541J
5962-9685701QSA	Active	Production	CFP (W) | 20	25 | TUBE	No	SNPB	N/A for Pkg Type	-55 to 125	5962-9685701QSA SNJ54AHC541W
SN74AHC541DBR	Last Time Buy	Production	SSOP (DB) | 20	2000 | LARGE T&R	Yes	NIPDAU	Level-1-260C-UNLIM	-40 to 125	HA541
SN74AHC541DBR.A	Last Time Buy	Production	SSOP (DB) | 20	2000 | LARGE T&R	Yes	NIPDAU	Level-1-260C-UNLIM	-40 to 125	HA541
SN74AHC541DGSR	Active	Production	VSSOP (DGS) | 20	5000 | LARGE T&R	Yes	NIPDAU	Level-1-260C-UNLIM	-40 to 125	AHC541
SN74AHC541DGVR	NRND	Production	TVSOP (DGV) | 20	2000 | LARGE T&R	Yes	NIPDAU	Level-1-260C-UNLIM	-40 to 125	HA541
SN74AHC541DGVR.A	NRND	Production	TVSOP (DGV) | 20	2000 | LARGE T&R	Yes	NIPDAU	Level-1-260C-UNLIM	-40 to 125	HA541
SN74AHC541DW	Obsolete	Production	SOIC (DW) | 20	-	-	Call TI	Call TI	-40 to 125	AHC541
SN74AHC541DWR	Active	Production	SOIC (DW) | 20	2000 | LARGE T&R	Yes	NIPDAU	Level-1-260C-UNLIM	-40 to 125	AHC541
SN74AHC541DWR.A	Active	Production	SOIC (DW) | 20	2000 | LARGE T&R	Yes	NIPDAU	Level-1-260C-UNLIM	-40 to 125	AHC541
SN74AHC541DWRE4	Active	Production	SOIC (DW) | 20	2000 | LARGE T&R	Yes	NIPDAU	Level-1-260C-UNLIM	-40 to 125	AHC541
SN74AHC541N	Active	Production	PDIP (N) | 20	20 | TUBE	Yes	NIPDAU	N/A for Pkg Type	-40 to 125	SN74AHC541N
SN74AHC541N.A	Active	Production	PDIP (N) | 20	20 | TUBE	Yes	NIPDAU	N/A for Pkg Type	-40 to 125	SN74AHC541N
SN74AHC541NSR	Active	Production	SOP (NS) | 20	2000 | LARGE T&R	Yes	NIPDAU	Level-1-260C-UNLIM	-40 to 125	AHC541
SN74AHC541NSR.A	Active	Production	SOP (NS) | 20	2000 | LARGE T&R	Yes	NIPDAU	Level-1-260C-UNLIM	-40 to 125	AHC541
SN74AHC541PW	Obsolete	Production	TSSOP (PW) | 20	-	-	Call TI	Call TI	-40 to 125	HA541
SN74AHC541PWR	Active	Production	TSSOP (PW) | 20	2000 | LARGE T&R	Yes	NIPDAU	Level-1-260C-UNLIM	-40 to 125	(AHC541, HA541)
SN74AHC541PWR.A	Active	Production	TSSOP (PW) | 20	2000 | LARGE T&R	Yes	NIPDAU	Level-1-260C-UNLIM	-40 to 125	(AHC541, HA541)
SN74AHC541PWRE4	Active	Production	TSSOP (PW) | 20	2000 | LARGE T&R	Yes	NIPDAU	Level-1-260C-UNLIM	-40 to 125	HA541
SN74AHC541PWRG4	Active	Production	TSSOP (PW) | 20	2000 | LARGE T&R	Yes	NIPDAU	Level-1-260C-UNLIM	-40 to 125	HA541
SN74AHC541PWRG4.A	Active	Production	TSSOP (PW) | 20	2000 | LARGE T&R	Yes	NIPDAU	Level-1-260C-UNLIM	-40 to 125	HA541

Orderable part number	Status (1)	Material type (2)	Package | Pins	Package qty | Carrier	RoHS (3)	Lead finish/ Ball material (4)	MSL rating/ Peak reflow (5)	Op temp (°C)	Part marking (6)
SN74AHC541RKSR	Active	Production	VQFN (RKS) | 20	3000 | LARGE T&R	Yes	NIPDAU	Level-1-260C-UNLIM	-40 to 125	AHC541
SNJ54AHC541FK	NRND	Production	LCCC (FK) | 20	55 | TUBE	No	SNPB	N/A for Pkg Type	-55 to 125	5962-9685701Q2A SNJ54AHC 541FK
SNJ54AHC541FK.A	NRND	Production	LCCC (FK) | 20	55 | TUBE	No	SNPB	N/A for Pkg Type	-55 to 125	5962-9685701Q2A SNJ54AHC 541FK
SNJ54AHC541J	Active	Production	CDIP (J) | 20	20 | TUBE	No	SNPB	N/A for Pkg Type	-55 to 125	5962-9685701QR A SNJ54AHC541J
SNJ54AHC541J.A	Active	Production	CDIP (J) | 20	20 | TUBE	No	SNPB	N/A for Pkg Type	-55 to 125	5962-9685701QR A SNJ54AHC541J
SNJ54AHC541W	Active	Production	CFP (W) | 20	25 | TUBE	No	SNPB	N/A for Pkg Type	-55 to 125	5962-9685701QS A SNJ54AHC541W
SNJ54AHC541W.A	Active	Production	CFP (W) | 20	25 | TUBE	No	SNPB	N/A for Pkg Type	-55 to 125	5962-9685701QS A SNJ54AHC541W

(1) **Status:** For more details on status, see our product life cycle.

(2) **Material type:** When designated, preproduction parts are prototypes/experimental devices, and are not yet approved or released for full production. Testing and final process, including without limitation quality assurance, reliability performance testing, and/or process qualification, may not yet be complete, and this item is subject to further changes or possible discontinuation. If available for ordering, purchases will be subject to an additional waiver at checkout, and are intended for early internal evaluation purposes only. These items are sold without warranties of any kind.

(3) **RoHS values:** Yes, No, RoHS Exempt. See the TI RoHS Statement for additional information and value definition.

(4) **Lead finish/Ball material:** Parts may have multiple material finish options. Finish options are separated by a vertical ruled line. Lead finish/Ball material values may wrap to two lines if the finish value exceeds the maximum column width.

(5) **MSL rating/Peak reflow:** The moisture sensitivity level ratings and peak solder (reflow) temperatures. In the event that a part has multiple moisture sensitivity ratings, only the lowest level per JEDEC standards is shown. Refer to the shipping label for the actual reflow temperature that will be used to mount the part to the printed circuit board.

(6) **Part marking:** There may be an additional marking, which relates to the logo, the lot trace code information, or the environmental category of the part.

Multiple part markings will be inside parentheses. Only one part marking contained in parentheses and separated by a "~" will appear on a part. If a line is indented then it is a continuation of the previous line and the two combined represent the entire part marking for that device.

Important Information and Disclaimer: The information provided on this page represents TI's knowledge and belief as of the date that it is provided. TI bases its knowledge and belief on information provided by third parties, and makes no representation or warranty as to the accuracy of such information. Efforts are underway to better integrate information from third parties. TI has taken and continues to take reasonable steps to provide representative and accurate information but may not have conducted destructive testing or chemical analysis on incoming materials and chemicals. TI and TI suppliers consider certain information to be proprietary, and thus CAS numbers and other limited information may not be available for release.

In no event shall TI's liability arising out of such information exceed the total purchase price of the TI part(s) at issue in this document sold by TI to Customer on an annual basis.

OTHER QUALIFIED VERSIONS OF SN54AHC541, SN74AHC541 :

- Catalog : SN74AHC541
- Automotive : SN74AHC541-Q1, SN74AHC541-Q1
- Military : SN54AHC541

NOTE: Qualified Version Definitions:

- Catalog - TI's standard catalog product
- Automotive - Q100 devices qualified for high-reliability automotive applications targeting zero defects
- Military - QML certified for Military and Defense Applications

TAPE AND REEL INFORMATION

REEL DIMENSIONS

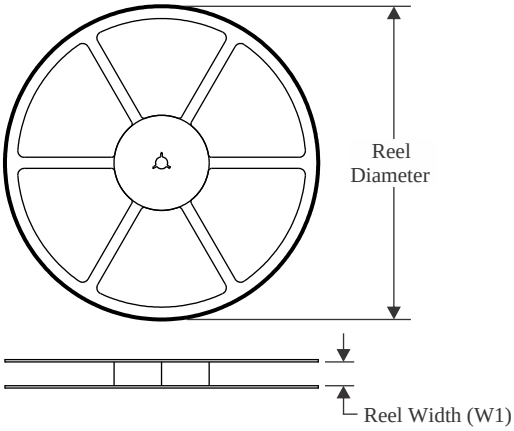

TAPE DIMENSIONS

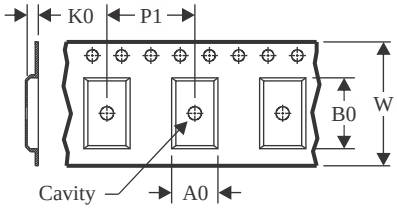

A0	Dimension designed to accommodate the component width
B0	Dimension designed to accommodate the component length
K0	Dimension designed to accommodate the component thickness
W	Overall width of the carrier tape
P1	Pitch between successive cavity centers

QUADRANT ASSIGNMENTS FOR PIN 1 ORIENTATION IN TAPE

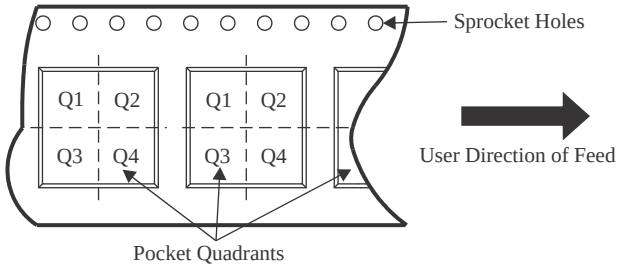

*All dimensions are nominal

Device	Package Type	Package Drawing	Pins	SPQ	Reel Diameter (mm)	Reel Width W1 (mm)	A0 (mm)	B0 (mm)	K0 (mm)	P1 (mm)	W (mm)	Pin1 Quadrant
SN74AHC541DBR	SSOP	DB	20	2000	330.0	16.4	8.2	7.5	2.5	12.0	16.0	Q1
SN74AHC541DGSR	VSSOP	DGS	20	5000	330.0	16.4	5.4	5.4	1.45	8.0	16.0	Q1
SN74AHC541DGVR	TVSOP	DGV	20	2000	330.0	12.4	6.9	5.6	1.6	8.0	12.0	Q1
SN74AHC541DWR	SOIC	DW	20	2000	330.0	24.4	10.9	13.3	2.7	12.0	24.0	Q1
SN74AHC541NSR	SOP	NS	20	2000	330.0	24.4	8.4	13.0	2.5	12.0	24.0	Q1
SN74AHC541PWR	TSSOP	PW	20	2000	330.0	16.4	6.95	7.0	1.4	8.0	16.0	Q1
SN74AHC541PWRG4	TSSOP	PW	20	2000	330.0	16.4	6.95	7.0	1.4	8.0	16.0	Q1
SN74AHC541PWRG4	TSSOP	PW	20	2000	330.0	16.4	6.95	7.0	1.4	8.0	16.0	Q1
SN74AHC541RKSR	VQFN	RKS	20	3000	180.0	12.4	2.8	4.8	1.2	4.0	12.0	Q1

TAPE AND REEL BOX DIMENSIONS

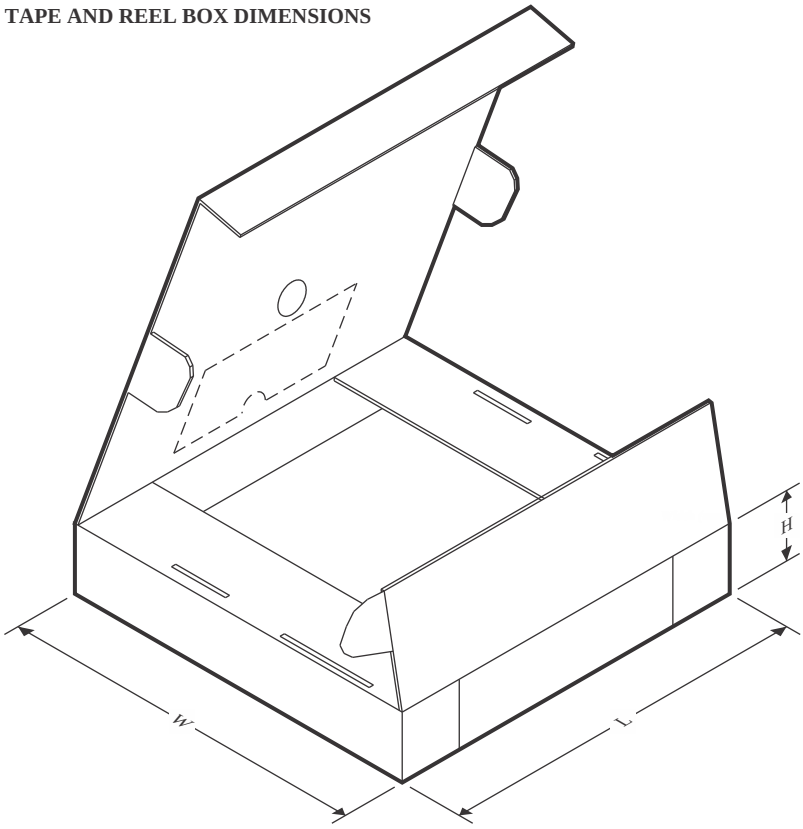

*All dimensions are nominal

Device	Package Type	Package Drawing	Pins	SPQ	Length (mm)	Width (mm)	Height (mm)
SN74AHC541DBR	SSOP	DB	20	2000	353.0	353.0	32.0
SN74AHC541DGSR	VSSOP	DGS	20	5000	353.0	353.0	32.0
SN74AHC541DGVR	TVSOP	DGV	20	2000	353.0	353.0	32.0
SN74AHC541DWR	SOIC	DW	20	2000	356.0	356.0	45.0
SN74AHC541NSR	SOP	NS	20	2000	356.0	356.0	45.0
SN74AHC541PWR	TSSOP	PW	20	2000	353.0	353.0	32.0
SN74AHC541PWRG4	TSSOP	PW	20	2000	353.0	353.0	32.0
SN74AHC541PWRG4	TSSOP	PW	20	2000	353.0	353.0	32.0
SN74AHC541RKSR	VQFN	RKS	20	3000	210.0	185.0	35.0

TUBE

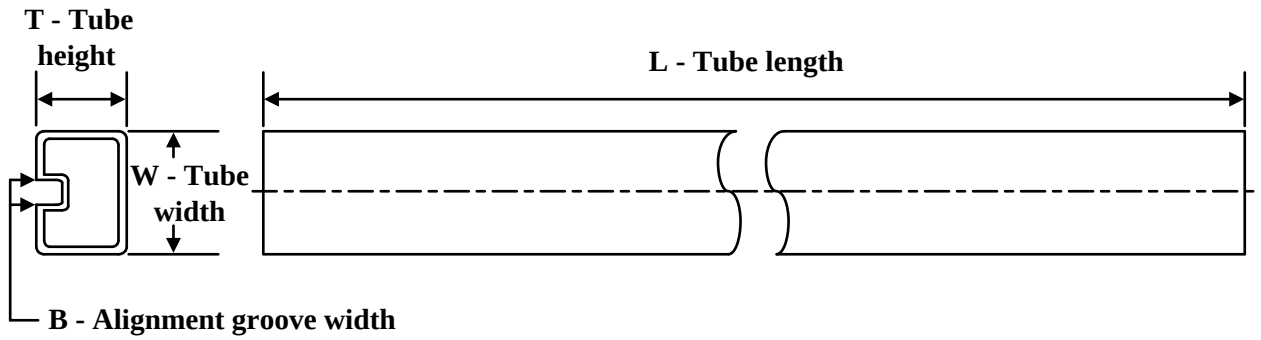

*All dimensions are nominal

Device	Package Name	Package Type	Pins	SPQ	L (mm)	W (mm)	T (µm)	B (mm)
5962-9685701Q2A	FK	LCCC	20	55	506.98	12.06	2030	NA
5962-9685701QSA	W	CFP	20	25	506.98	26.16	6220	NA
SN74AHC541N	N	PDIP	20	20	506	13.97	11230	4.32
SN74AHC541N.A	N	PDIP	20	20	506	13.97	11230	4.32
SNJ54AHC541FK	FK	LCCC	20	55	506.98	12.06	2030	NA
SNJ54AHC541FK.A	FK	LCCC	20	55	506.98	12.06	2030	NA
SNJ54AHC541W	W	CFP	20	25	506.98	26.16	6220	NA
SNJ54AHC541W.A	W	CFP	20	25	506.98	26.16	6220	NA

PACKAGE OUTLINE

DB0020A

SSOP - 2 mm max height

SMALL OUTLINE PACKAGE

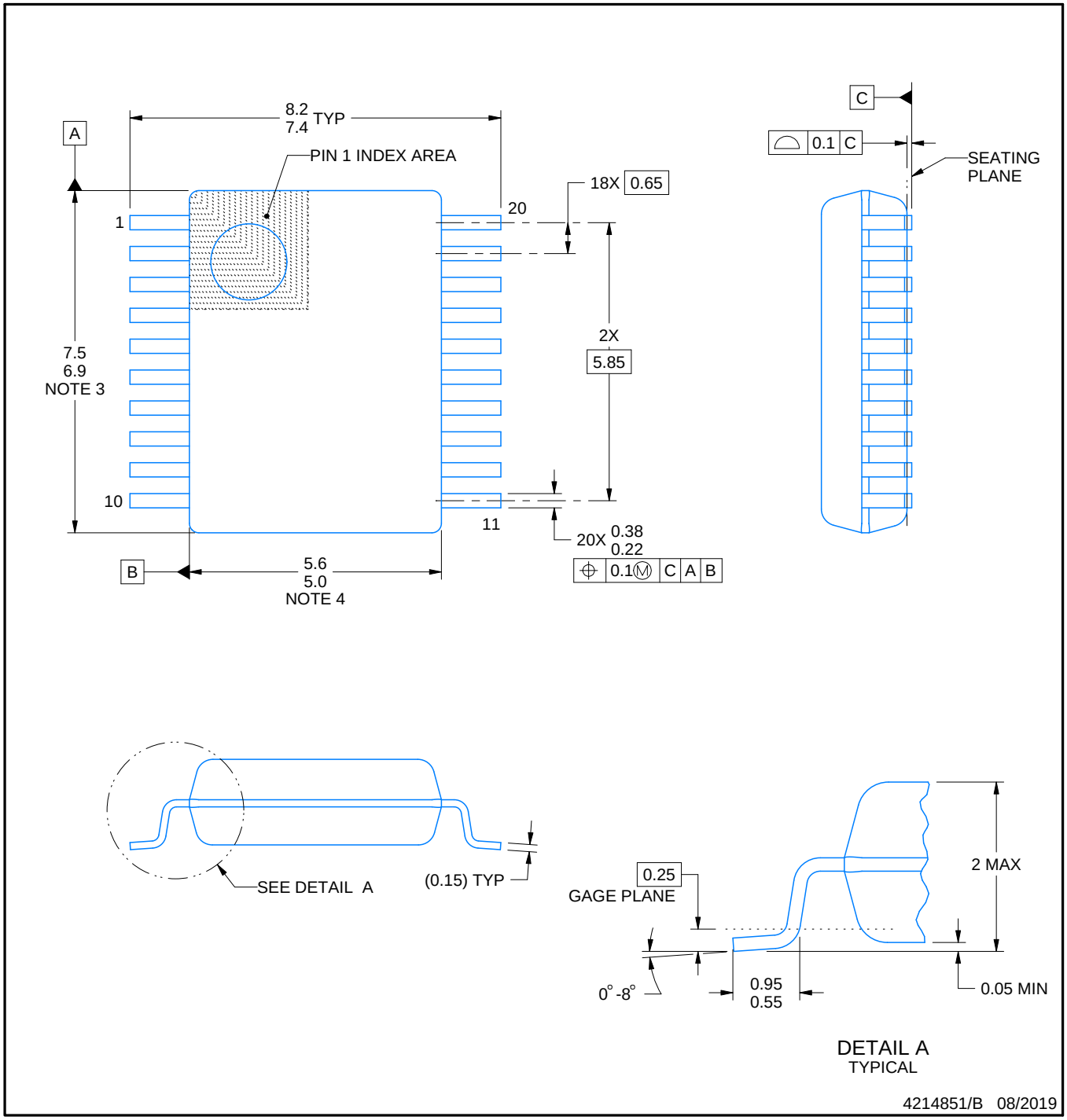

NOTES:

1. All linear dimensions are in millimeters. Any dimensions in parenthesis are for reference only. Dimensioning and tolerancing per ASME Y14.5M.
2. This drawing is subject to change without notice.
3. This dimension does not include mold flash, protrusions, or gate burrs. Mold flash, protrusions, or gate burrs shall not exceed 0.15 mm per side.
4. This dimension does not include interlead flash. Interlead flash shall not exceed 0.25 mm per side.
5. Reference JEDEC registration MO-150.

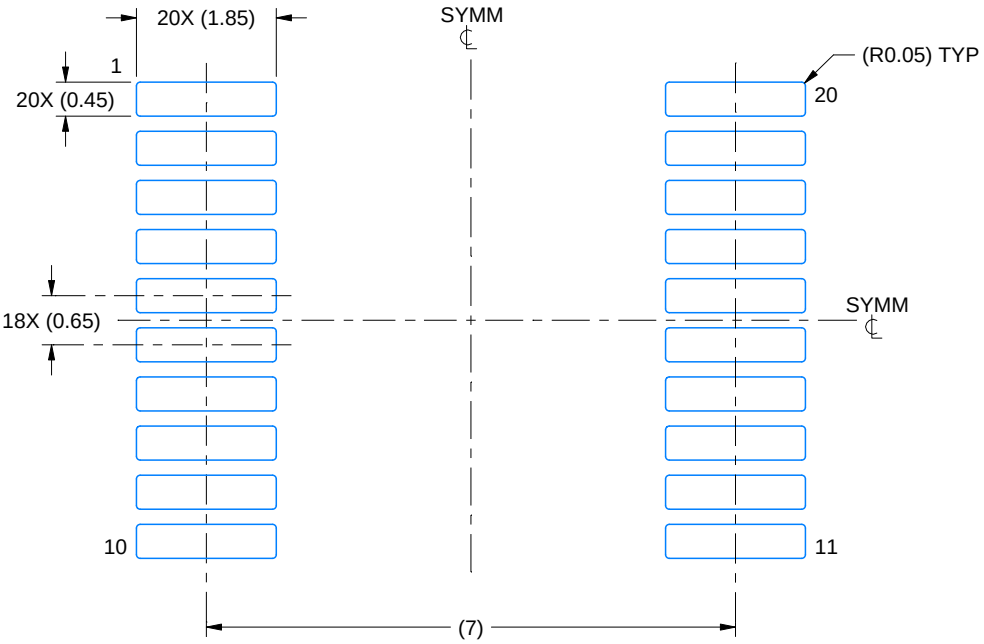

LAND PATTERN EXAMPLE
EXPOSED METAL SHOWN
SCALE: 10X

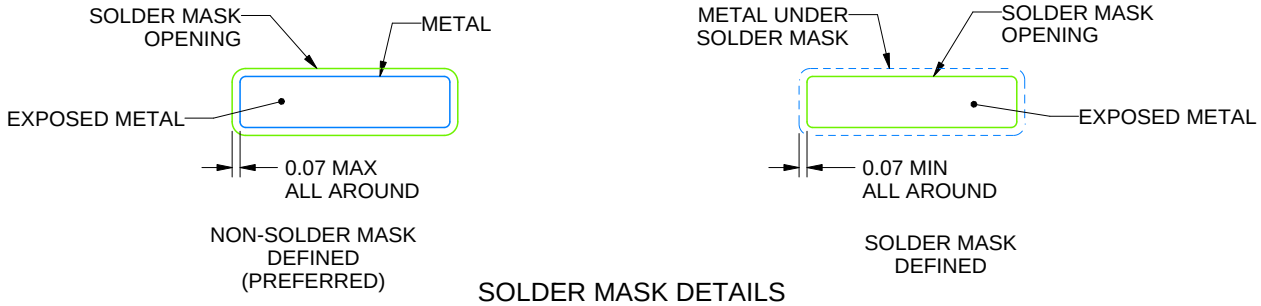

SOLDER MASK DETAILS

4214851/B 08/2019

NOTES: (continued)

6. Publication IPC-7351 may have alternate designs.
7. Solder mask tolerances between and around signal pads can vary based on board fabrication site.

EXAMPLE STENCIL DESIGN

DB0020A

SSOP - 2 mm max height

SMALL OUTLINE PACKAGE

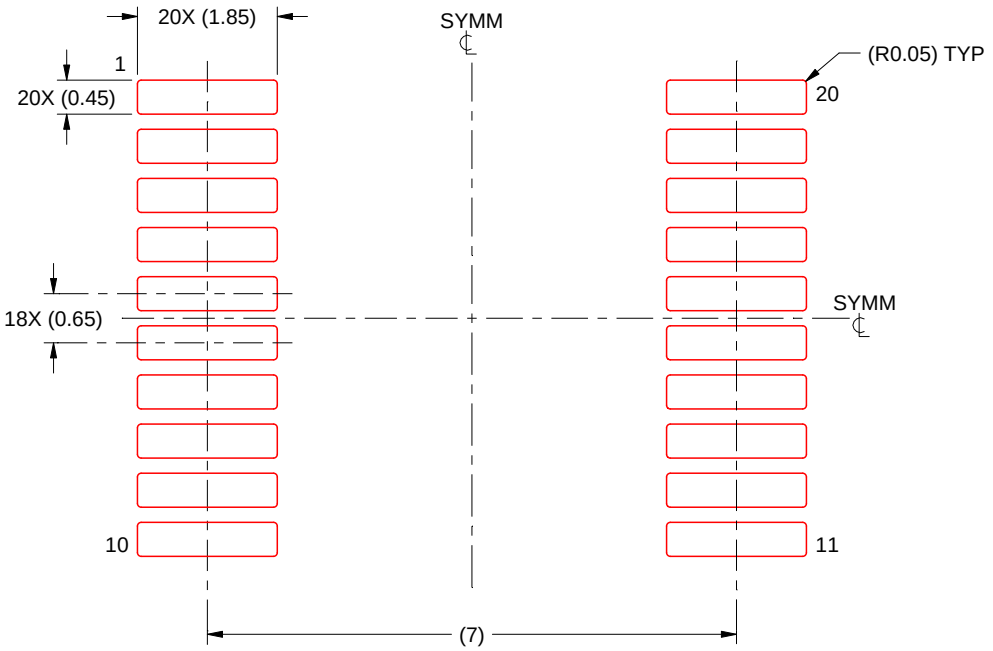

SOLDER PASTE EXAMPLE
BASED ON 0.125 mm THICK STENCIL
SCALE: 10X

4214851/B 08/2019

NOTES: (continued)

8. Laser cutting apertures with trapezoidal walls and rounded corners may offer better paste release. IPC-7525 may have alternate design recommendations.
9. Board assembly site may have different recommendations for stencil design.

GENERIC PACKAGE VIEW

RKS 20

VQFN - 1 mm max height

2.5 x 4.5, 0.5 mm pitch

PLASTIC QUAD FLATPACK - NO LEAD

This image is a representation of the package family, actual package may vary.
Refer to the product data sheet for package details.

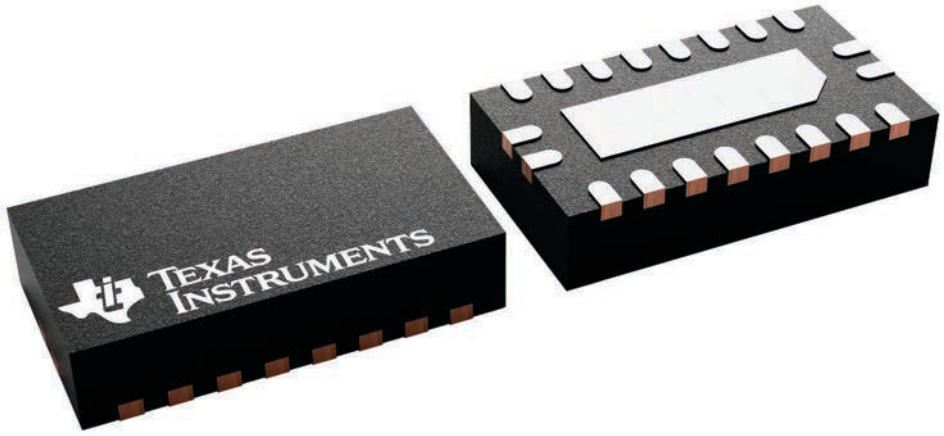

PACKAGE OUTLINE

RKS0020A

VQFN - 1 mm max height

PLASTIC QUAD FLATPACK - NO LEAD

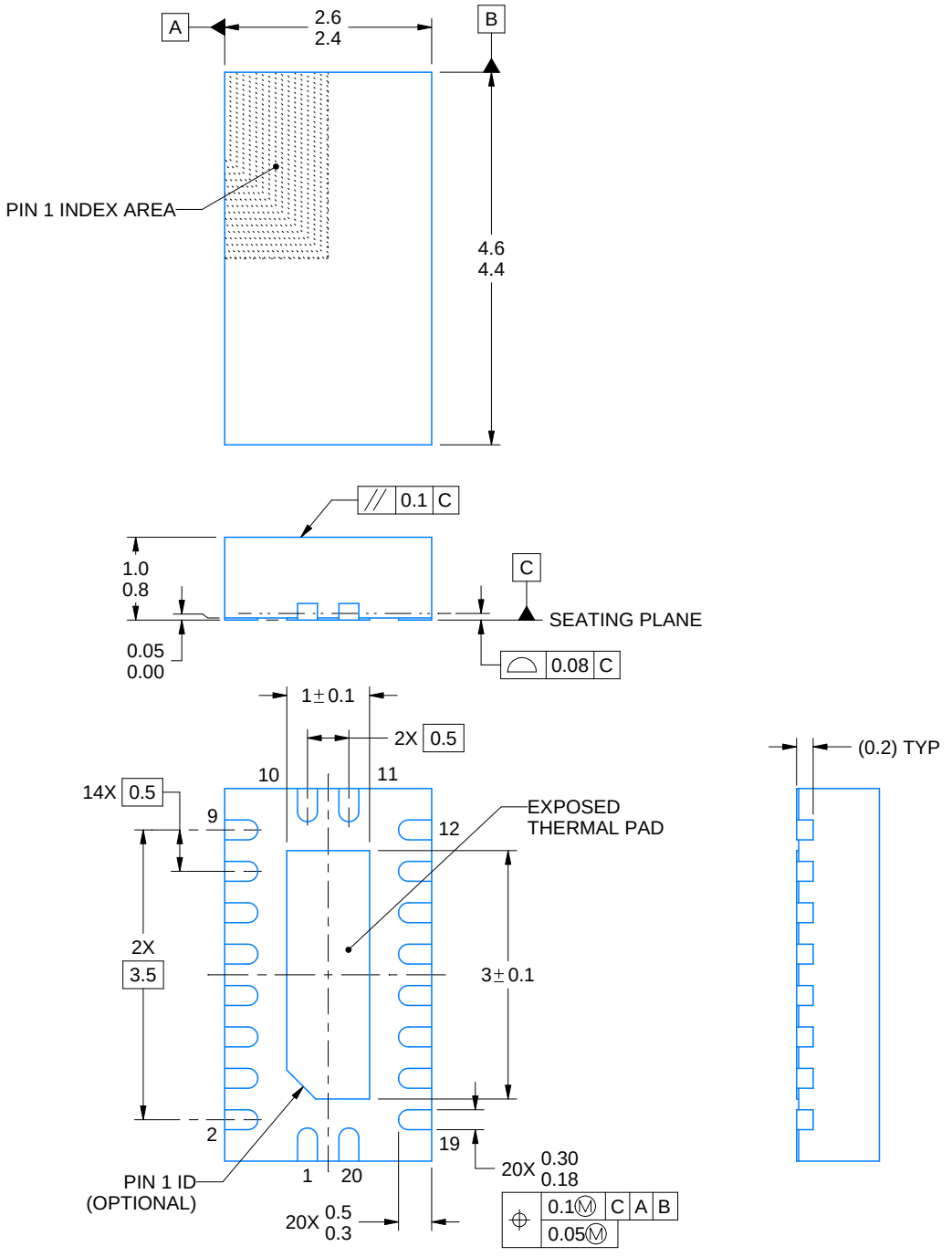

NOTES:

1. All linear dimensions are in millimeters. Any dimensions in parenthesis are for reference only. Dimensioning and tolerancing per ASME Y14.5M.
2. This drawing is subject to change without notice.
3. The package thermal pad must be soldered to the printed circuit board for thermal and mechanical performance.

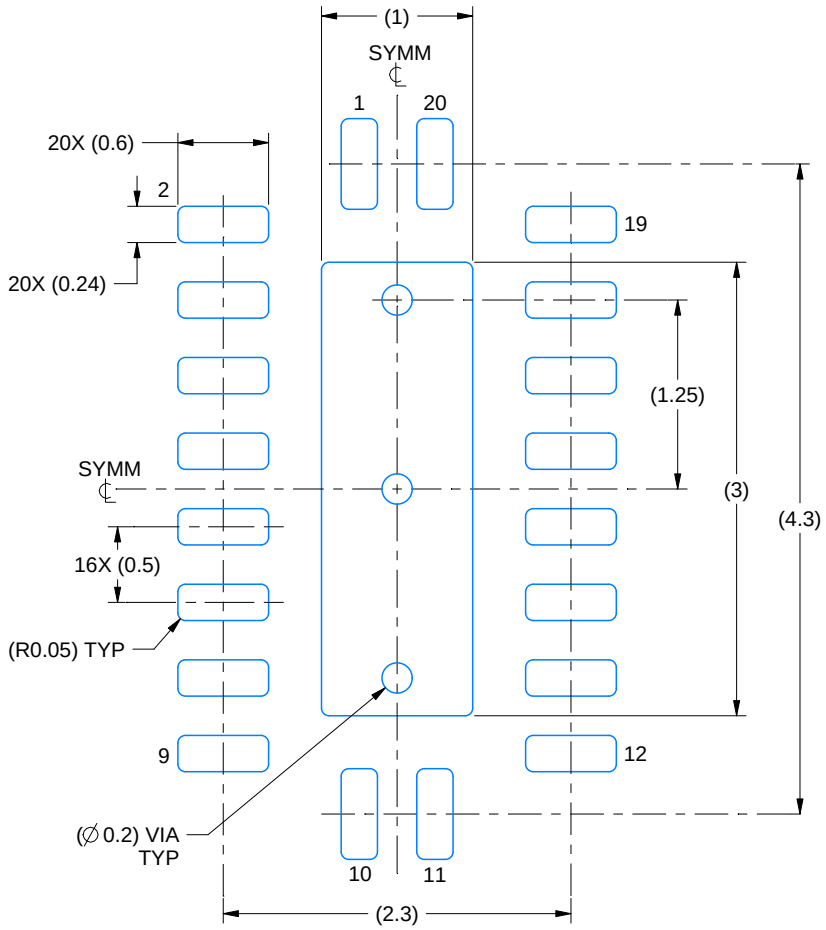

LAND PATTERN EXAMPLE
SCALE:20X

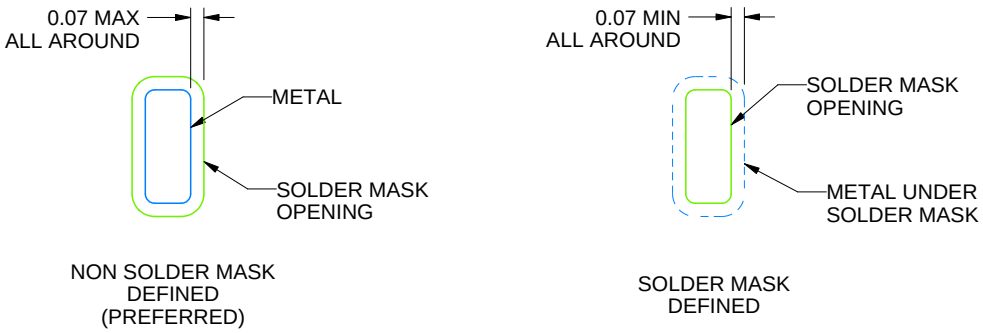

SOLDER MASK DETAILS

4222490/B 02/2021

NOTES: (continued)

4. This package is designed to be soldered to a thermal pad on the board. For more information, see Texas Instruments literature number SLUA271 (www.ti.com/lit/slua271).
5. Vias are optional depending on application, refer to device data sheet. If some or all are implemented, recommended via locations are shown.

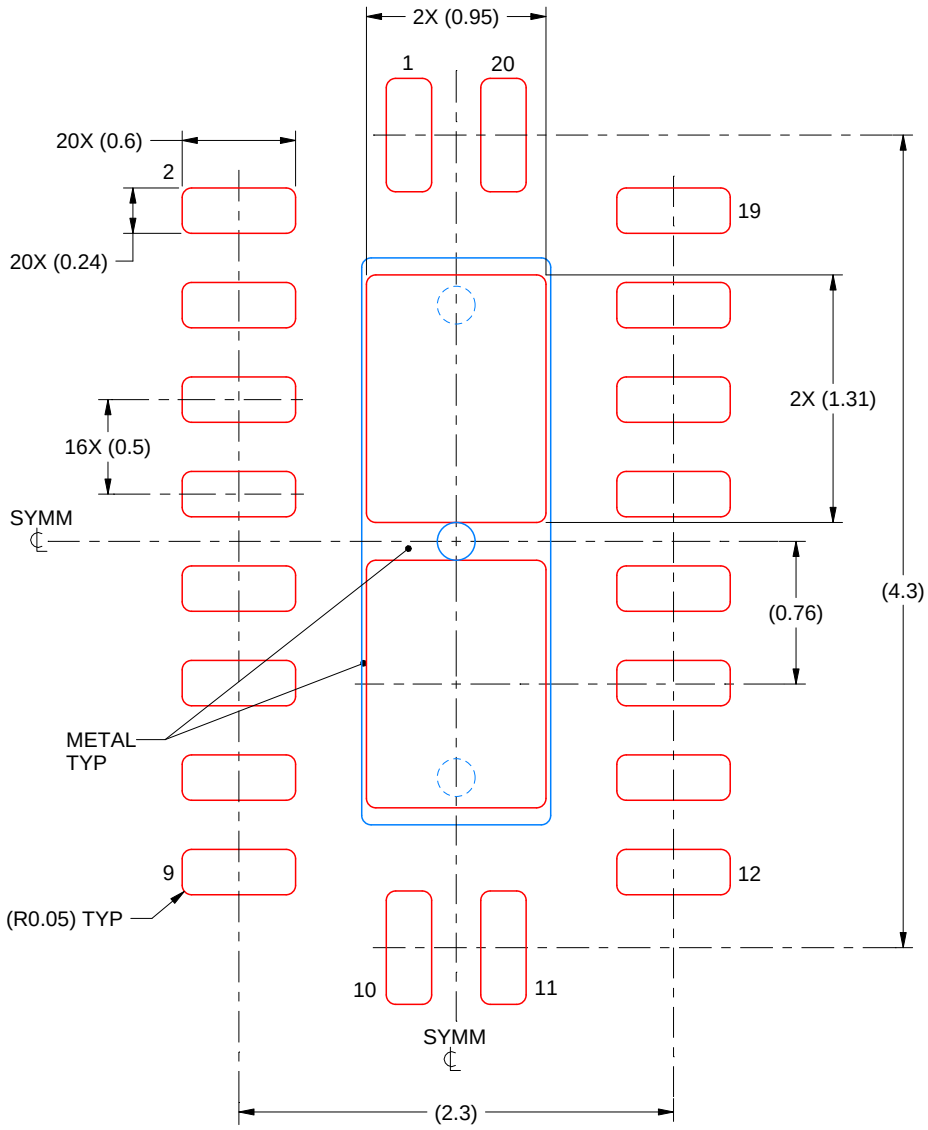

SOLDER PASTE EXAMPLE
BASED ON 0.125 mm THICK STENCIL

EXPOSED PAD
83% PRINTED SOLDER COVERAGE BY AREA
SCALE:25X

4222490/B 02/2021

NOTES: (continued)

6. Laser cutting apertures with trapezoidal walls and rounded corners may offer better paste release. IPC-7525 may have alternate design recommendations.

MECHANICAL DATA

NS (R-PDSO-G)** **PLASTIC SMALL-OUTLINE PACKAGE**

14-PINS SHOWN

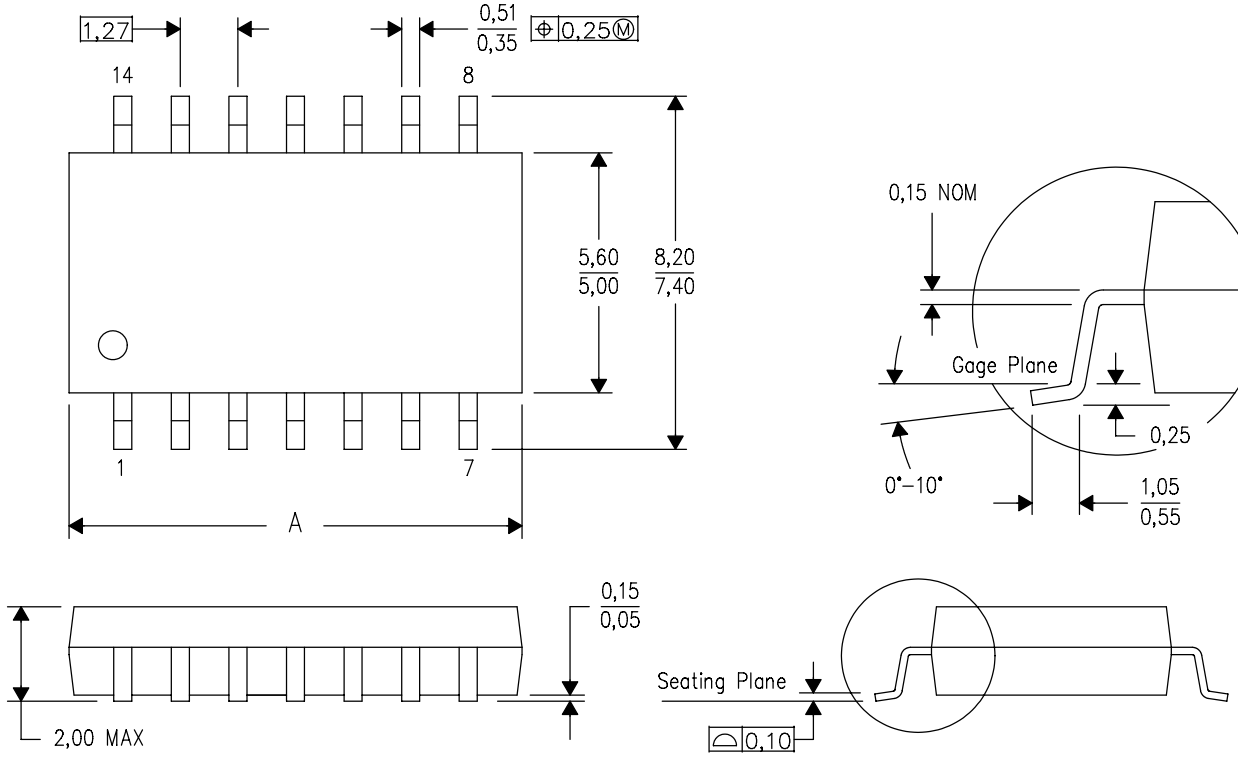

DIM \ PINS **	14	16	20	24
A MAX	10,50	10,50	12,90	15,30
A MIN	9,90	9,90	12,30	14,70

4040062/C 03/03

NOTES:
A. All linear dimensions are in millimeters.
B. This drawing is subject to change without notice.
C. Body dimensions do not include mold flash or protrusion, not to exceed 0,15.

J (R–GDIP–T**)

14 LEADS SHOWN

CERAMIC DUAL IN–LINE PACKAGE

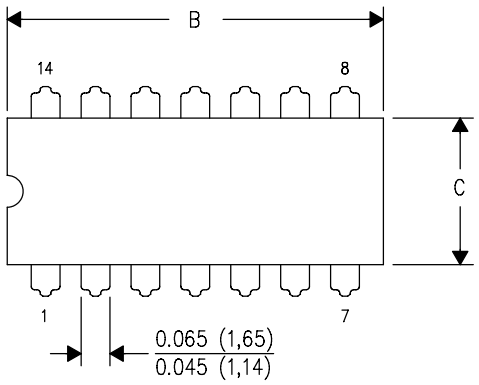

DIM \ PINS **	14	16	18	20
A	0.300 (7,62) BSC	0.300 (7,62) BSC	0.300 (7,62) BSC	0.300 (7,62) BSC
B MAX	0.785 (19,94)	.840 (21,34)	0.960 (24,38)	1.060 (26,92)
B MIN	—	—	—	—
C MAX	0.300 (7,62)	0.300 (7,62)	0.310 (7,87)	0.300 (7,62)
C MIN	0.245 (6,22)	0.245 (6,22)	0.220 (5,59)	0.245 (6,22)

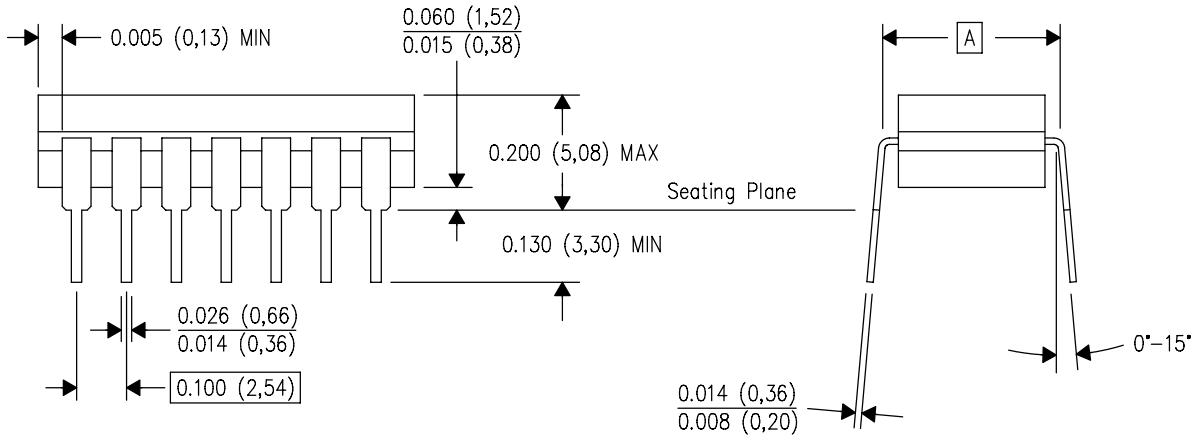

4040083/F 03/03

NOTES:
A. All linear dimensions are in inches (millimeters).
B. This drawing is subject to change without notice.
C. This package is hermetically sealed with a ceramic lid using glass frit.
D. Index point is provided on cap for terminal identification only on press ceramic glass frit seal only.
E. Falls within MIL STD 1835 GDIP1–T14, GDIP1–T16, GDIP1–T18 and GDIP1–T20.

DGV (R-PDSO-G)** **PLASTIC SMALL-OUTLINE**

24 PINS SHOWN

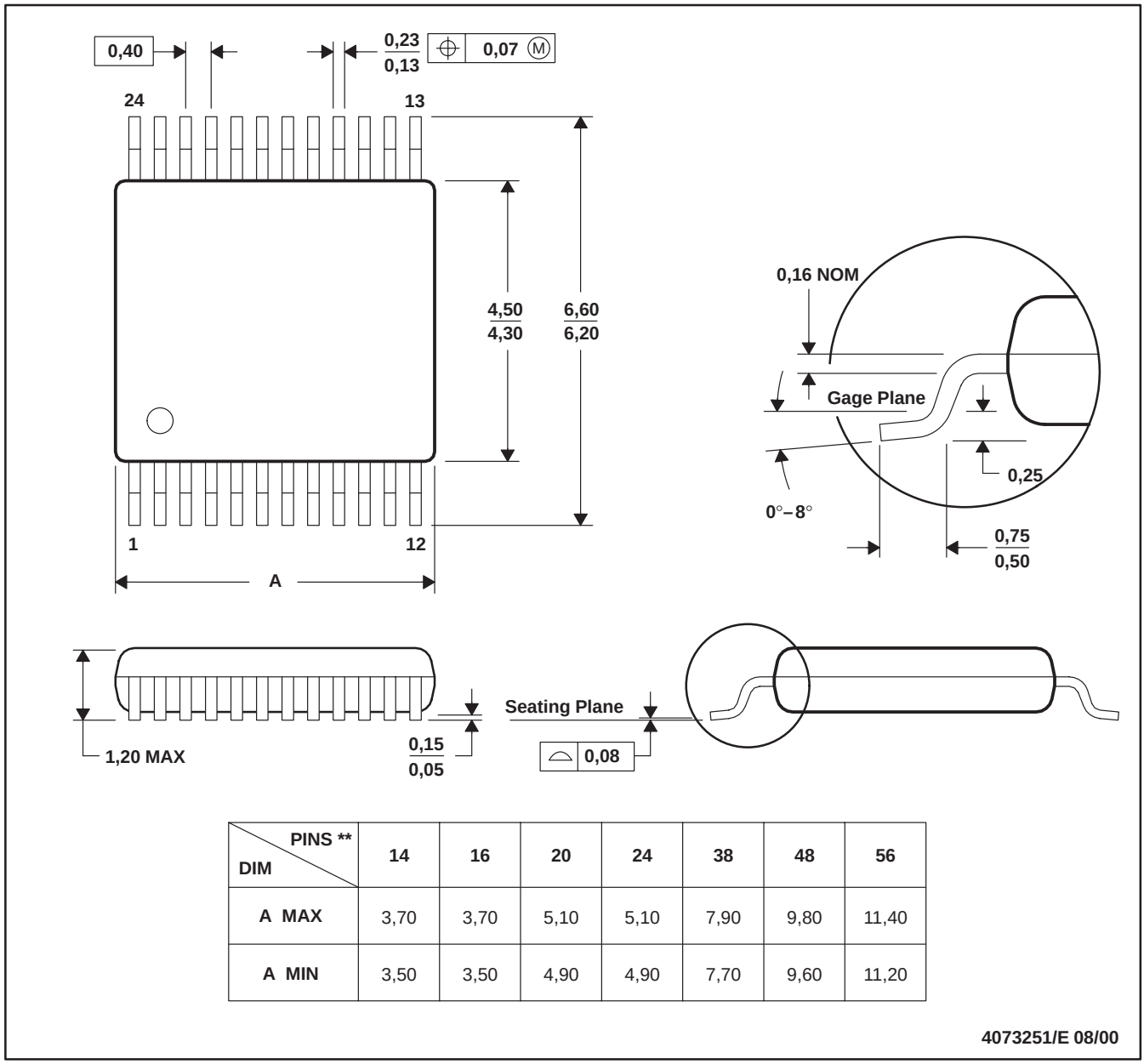

DIM \ PINS **	14	16	20	24	38	48	56
A MAX	3,70	3,70	5,10	5,10	7,90	9,80	11,40
A MIN	3,50	3,50	4,90	4,90	7,70	9,60	11,20

4073251/E 08/00

NOTES: A. All linear dimensions are in millimeters.
B. This drawing is subject to change without notice.
C. Body dimensions do not include mold flash or protrusion, not to exceed 0,15 per side.
D. Falls within JEDEC: 24/48 Pins – MO-153
14/16/20/56 Pins – MO-194

GENERIC PACKAGE VIEW

FK 20

LCCC - 2.03 mm max height

8.89 x 8.89, 1.27 mm pitch

LEADLESS CERAMIC CHIP CARRIER

This image is a representation of the package family, actual package may vary.
Refer to the product data sheet for package details.

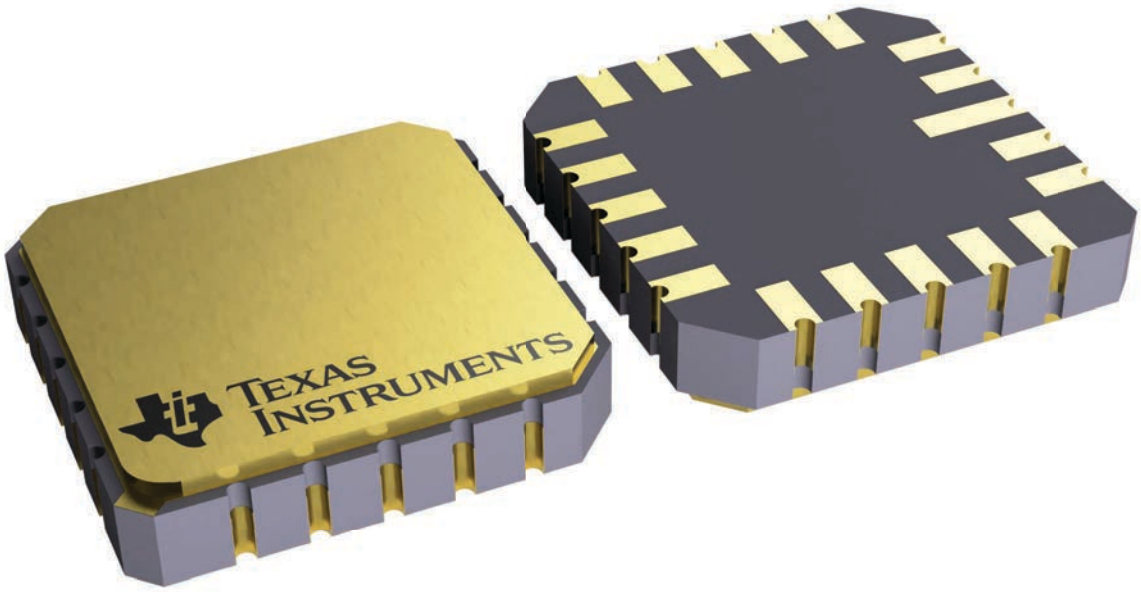

4229370VA\

N (R–PDIP–T**)

PLASTIC DUAL–IN–LINE PACKAGE

16 PINS SHOWN

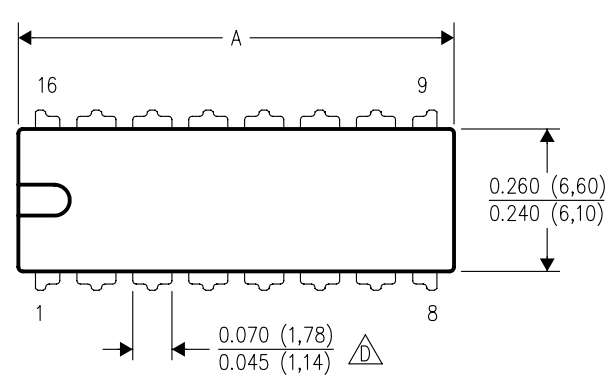

DIM \ PINS **	14	16	18	20
A MAX	0.775 (19,69)	0.775 (19,69)	0.920 (23,37)	1.060 (26,92)
A MIN	0.745 (18,92)	0.745 (18,92)	0.850 (21,59)	0.940 (23,88)
MS–001 VARIATION (C)	AA	BB	AC	AD

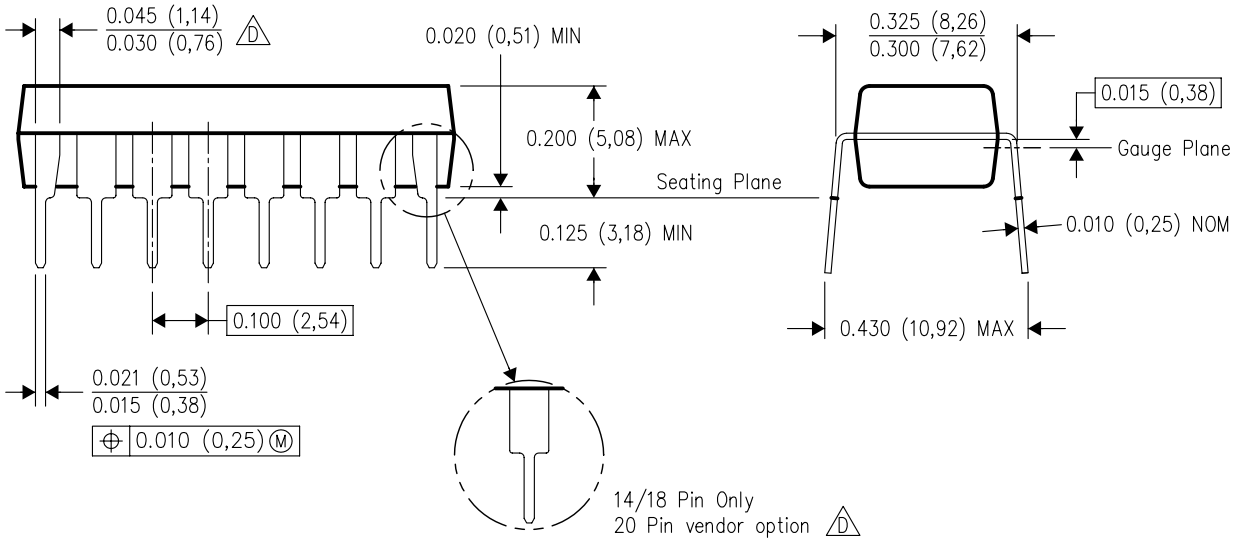

4040049/E 12/2002

NOTES:
A. All linear dimensions are in inches (millimeters).
B. This drawing is subject to change without notice.
C. Falls within JEDEC MS–001, except 18 and 20 pin minimum body length (Dim A).
D. The 20 pin end lead shoulder width is a vendor option, either half or full width.

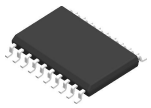

PACKAGE OUTLINE

DW0020A

SOIC - 2.65 mm max height

SOIC

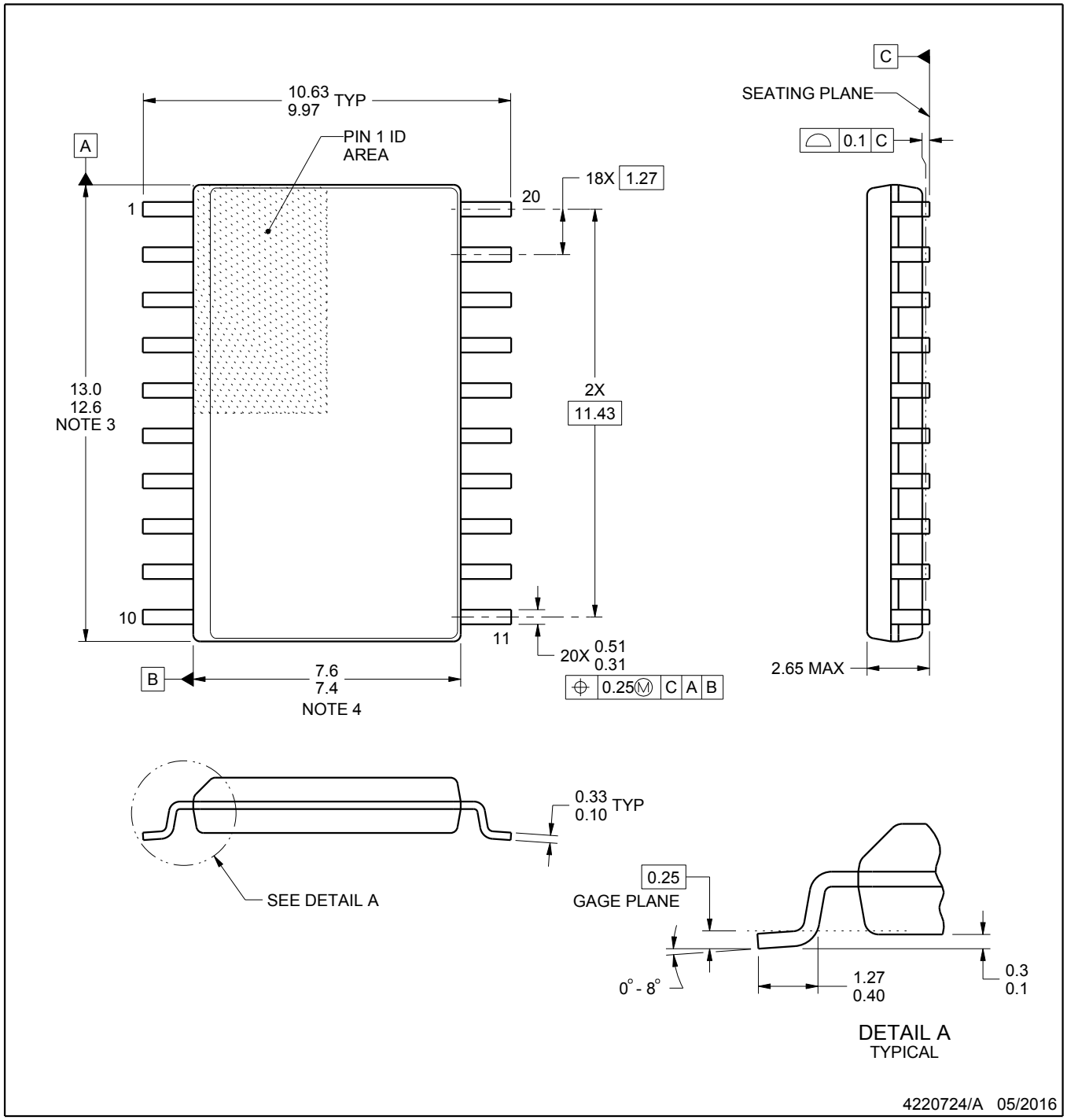

NOTES:

1. All linear dimensions are in millimeters. Dimensions in parenthesis are for reference only. Dimensioning and tolerancing per ASME Y14.5M.
2. This drawing is subject to change without notice.
3. This dimension does not include mold flash, protrusions, or gate burrs. Mold flash, protrusions, or gate burrs shall not exceed 0.15 mm per side.
4. This dimension does not include interlead flash. Interlead flash shall not exceed 0.43 mm per side.
5. Reference JEDEC registration MS-013.

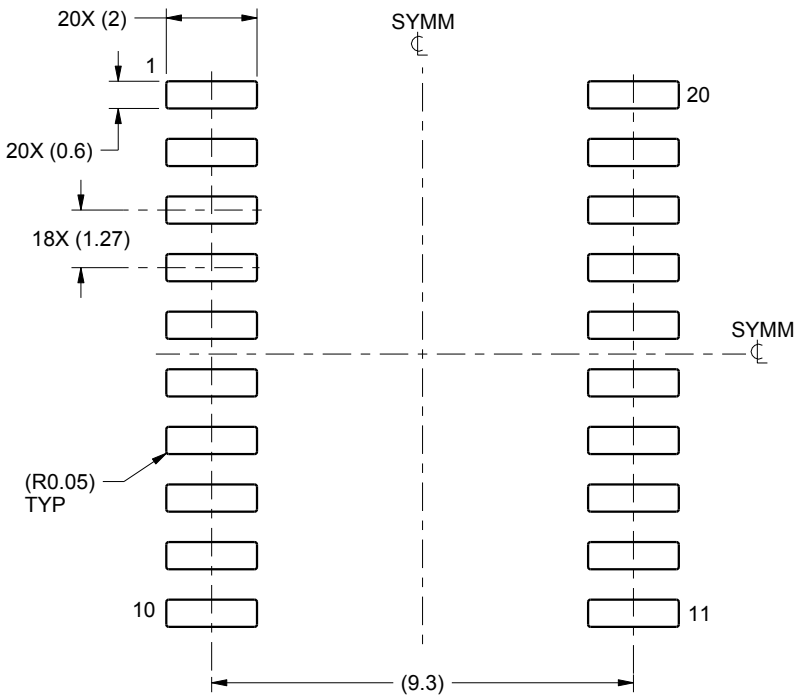

LAND PATTERN EXAMPLE
SCALE:6X

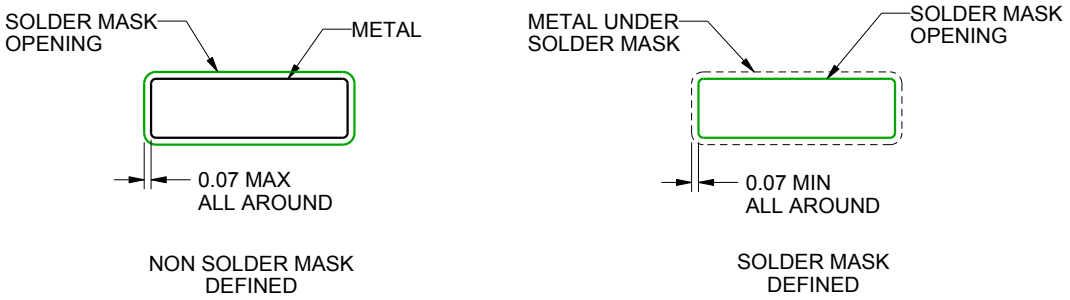

SOLDER MASK DETAILS

4220724/A 05/2016

NOTES: (continued)

6. Publication IPC-7351 may have alternate designs.
7. Solder mask tolerances between and around signal pads can vary based on board fabrication site.

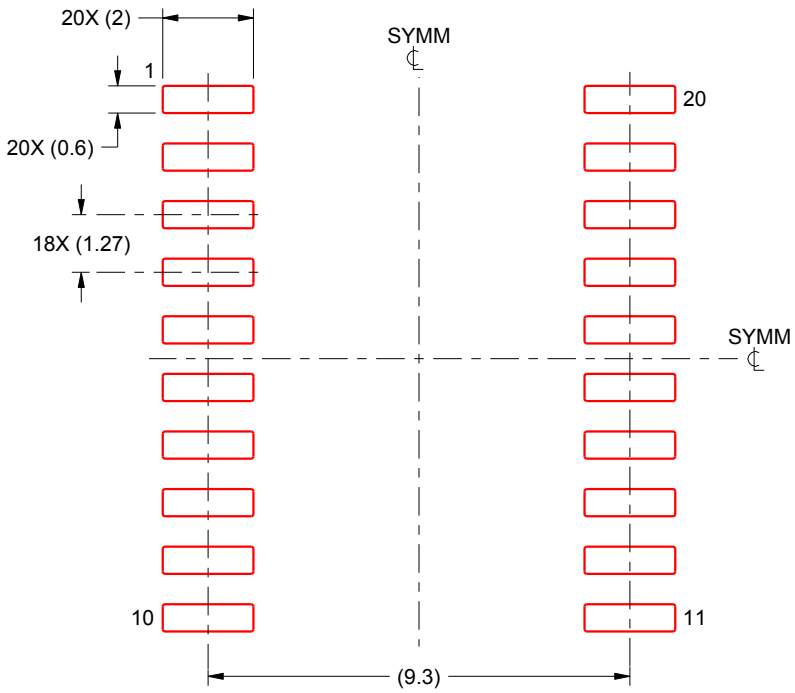

SOLDER PASTE EXAMPLE
BASED ON 0.125 mm THICK STENCIL
SCALE:6X

4220724/A 05/2016

NOTES: (continued)

8. Laser cutting apertures with trapezoidal walls and rounded corners may offer better paste release. IPC-7525 may have alternate design recommendations.
9. Board assembly site may have different recommendations for stencil design.

W (R–GDFP–F20) CERAMIC DUAL FLATPACK

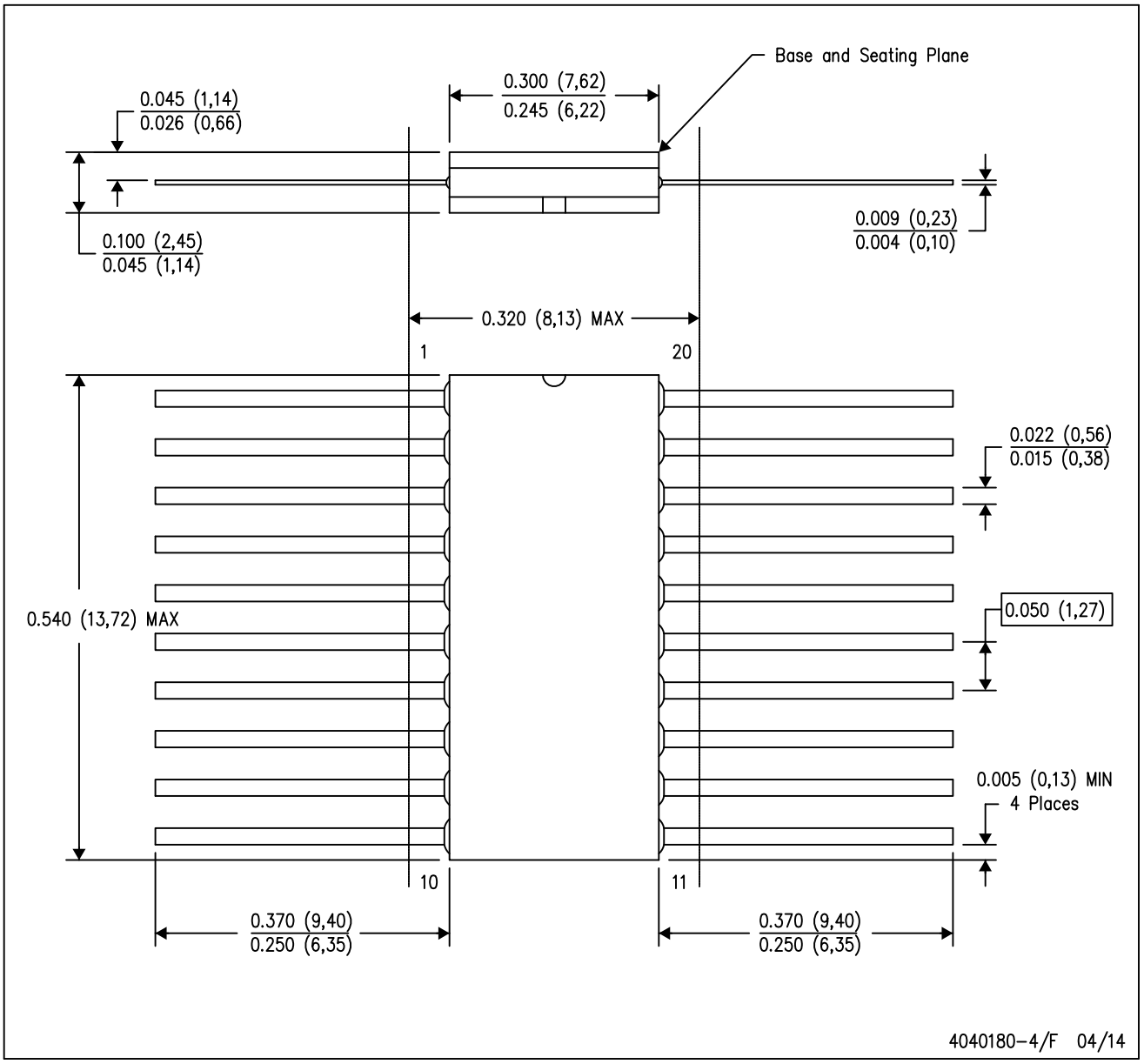

NOTES:
A. All linear dimensions are in inches (millimeters).
B. This drawing is subject to change without notice.
C. This package can be hermetically sealed with a ceramic lid using glass frit.
D. Index point is provided on cap for terminal identification only.
E. Falls within Mil–Std 1835 GDFP2–F20

PACKAGE OUTLINE

PW0020A

TSSOP - 1.2 mm max height

SMALL OUTLINE PACKAGE

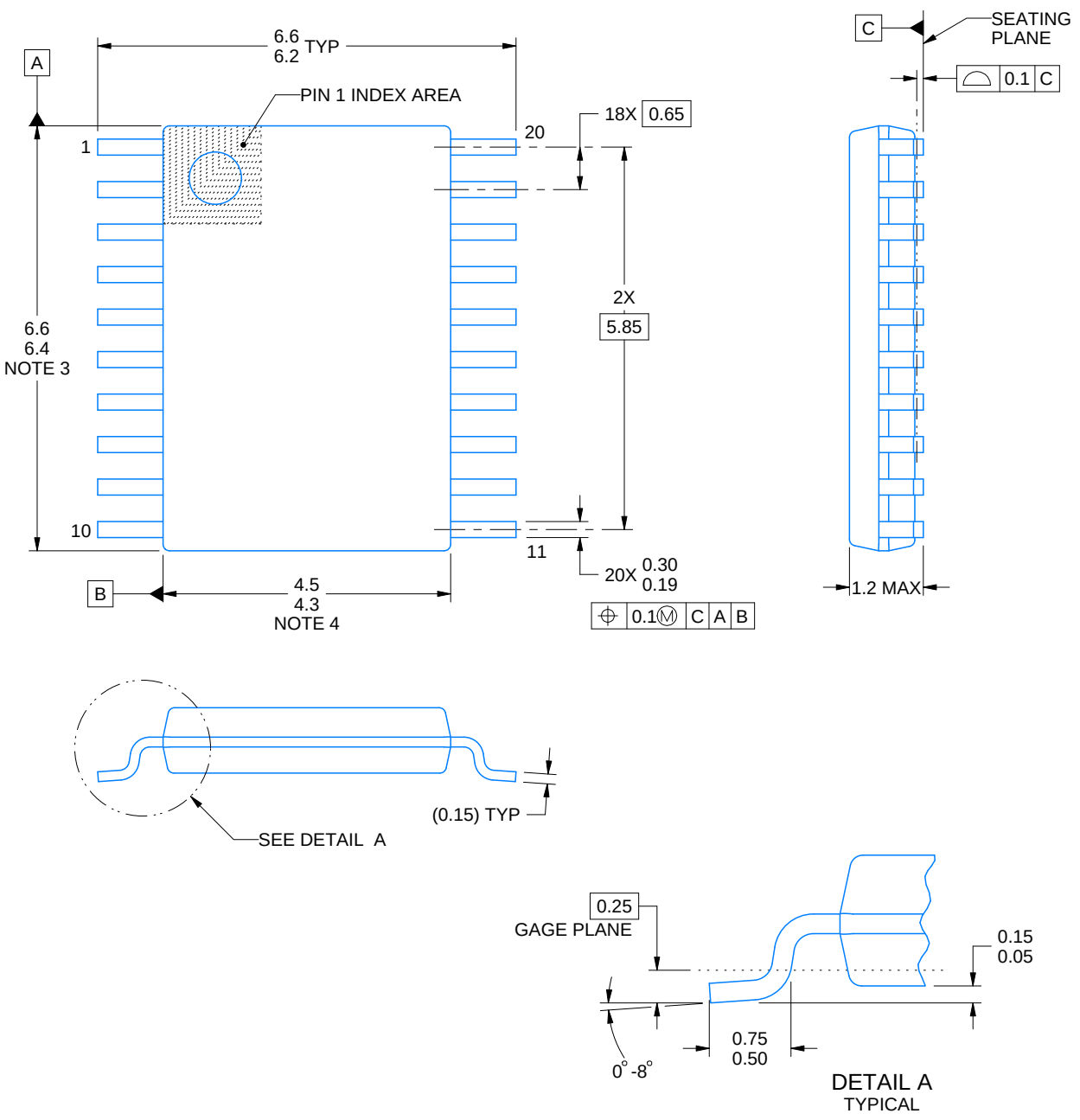

NOTES:

1. All linear dimensions are in millimeters. Any dimensions in parenthesis are for reference only. Dimensioning and tolerancing per ASME Y14.5M.
2. This drawing is subject to change without notice.
3. This dimension does not include mold flash, protrusions, or gate burrs. Mold flash, protrusions, or gate burrs shall not exceed 0.15 mm per side.
4. This dimension does not include interlead flash. Interlead flash shall not exceed 0.25 mm per side.
5. Reference JEDEC registration MO-153.

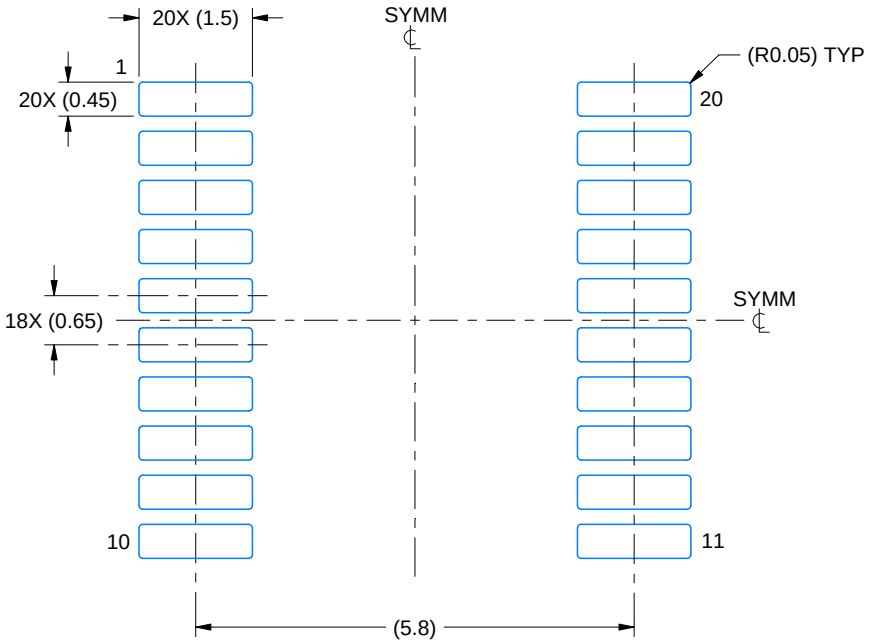

LAND PATTERN EXAMPLE
EXPOSED METAL SHOWN
SCALE: 10X



SOLDER MASK DETAILS

4220206/A 02/2017

NOTES: (continued)

6. Publication IPC-7351 may have alternate designs.
7. Solder mask tolerances between and around signal pads can vary based on board fabrication site.

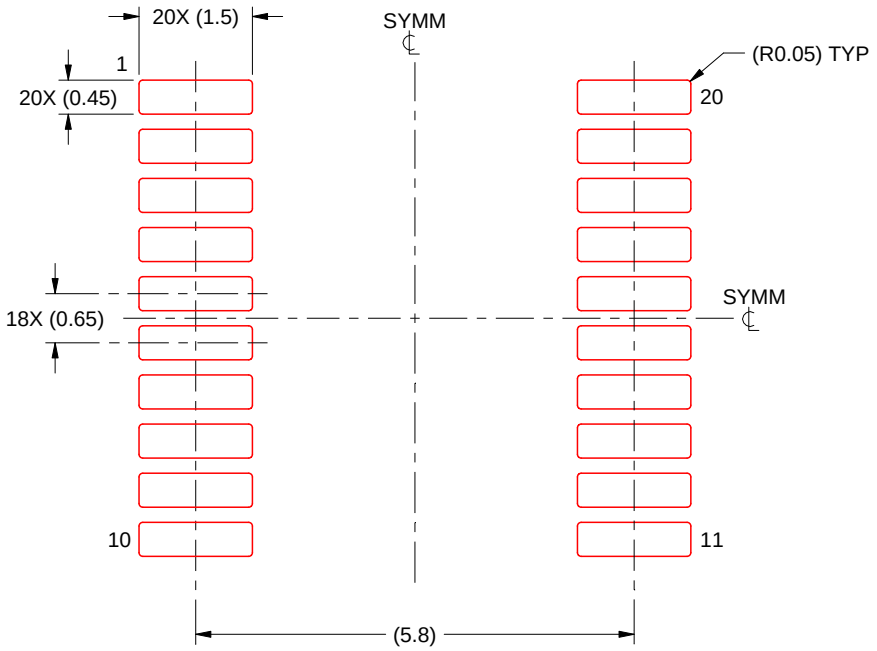

SOLDER PASTE EXAMPLE
BASED ON 0.125 mm THICK STENCIL
SCALE: 10X

4220206/A 02/2017

NOTES: (continued)

8. Laser cutting apertures with trapezoidal walls and rounded corners may offer better paste release. IPC-7525 may have alternate design recommendations.
9. Board assembly site may have different recommendations for stencil design.

PACKAGE OUTLINE

DGS0020A

VSSOP - 1.1 mm max height

SMALL OUTLINE PACKAGE

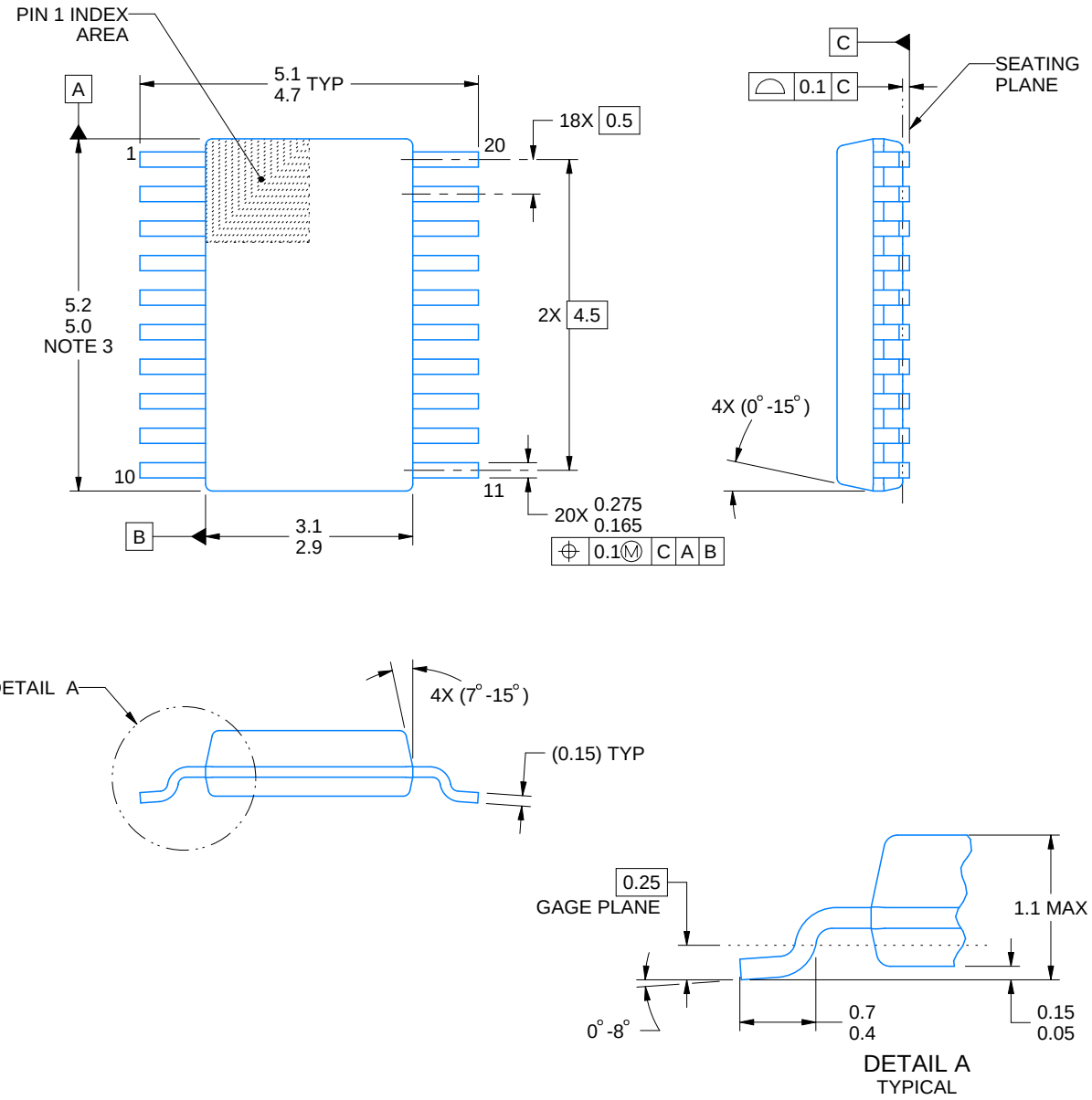

PowerPAD is a trademark of Texas Instruments.

NOTES:

1. All linear dimensions are in millimeters. Any dimensions in parenthesis are for reference only. Dimensioning and tolerancing per ASME Y14.5M.
2. This drawing is subject to change without notice.
3. This dimension does not include mold flash, protrusions, or gate burrs. Mold flash, protrusions, or gate burrs shall not exceed 0.15 mm per side.
4. No JEDEC registration as of September 2020.
5. Features may differ or may not be present.

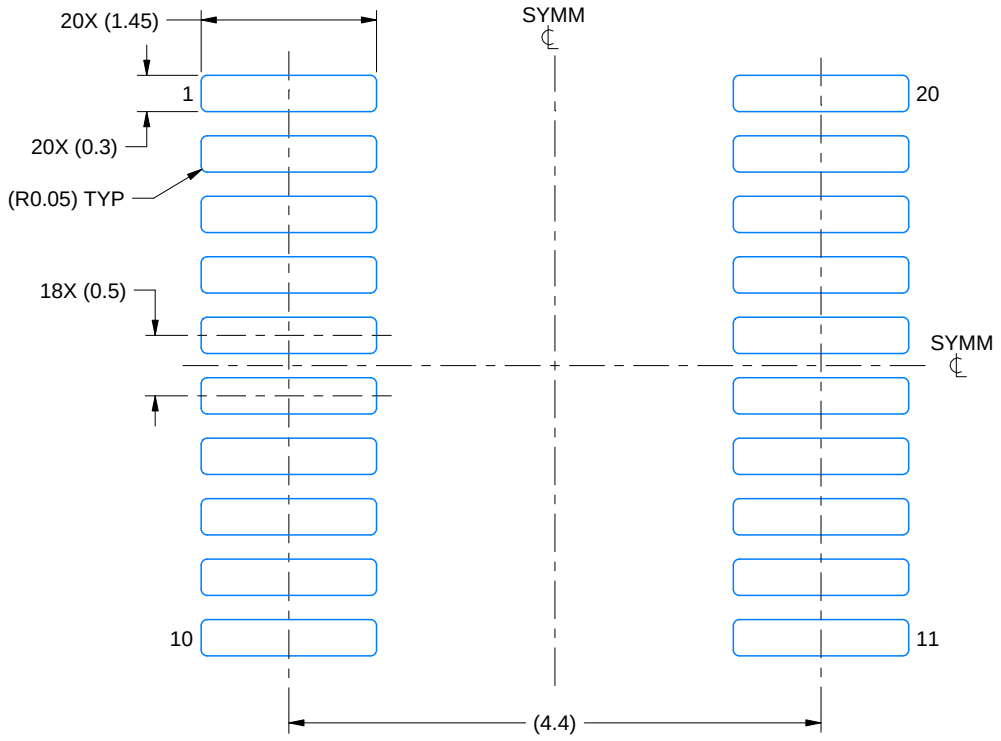

LAND PATTERN EXAMPLE
SCALE: 16X

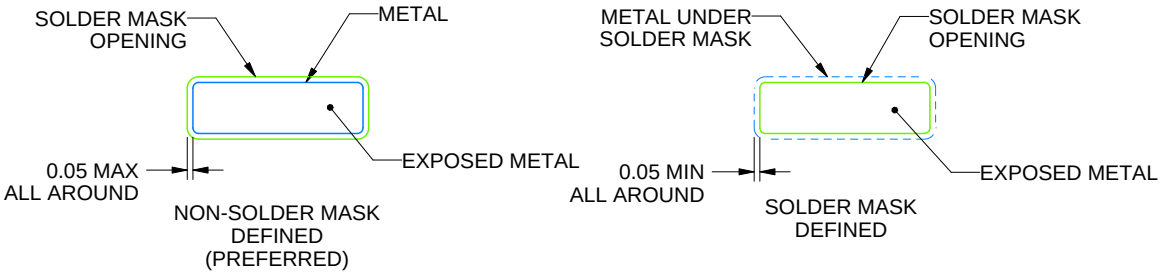

SOLDER MASK DETAILS

4226367/A 10/2020

NOTES: (continued)

6. Publication IPC-7351 may have alternate designs.
7. Solder mask tolerances between and around signal pads can vary based on board fabrication site.
8. This package is designed to be soldered to a thermal pad on the board. For more information, see Texas Instruments literature numbers SLMA002 (www.ti.com/lit/slma002) and SLMA004 (www.ti.com/lit/slma004).
9. Size of metal pad may vary due to creepage requirement.
10. Vias are optional depending on application, refer to device data sheet. It is recommended that vias under paste be filled, plugged or tented.

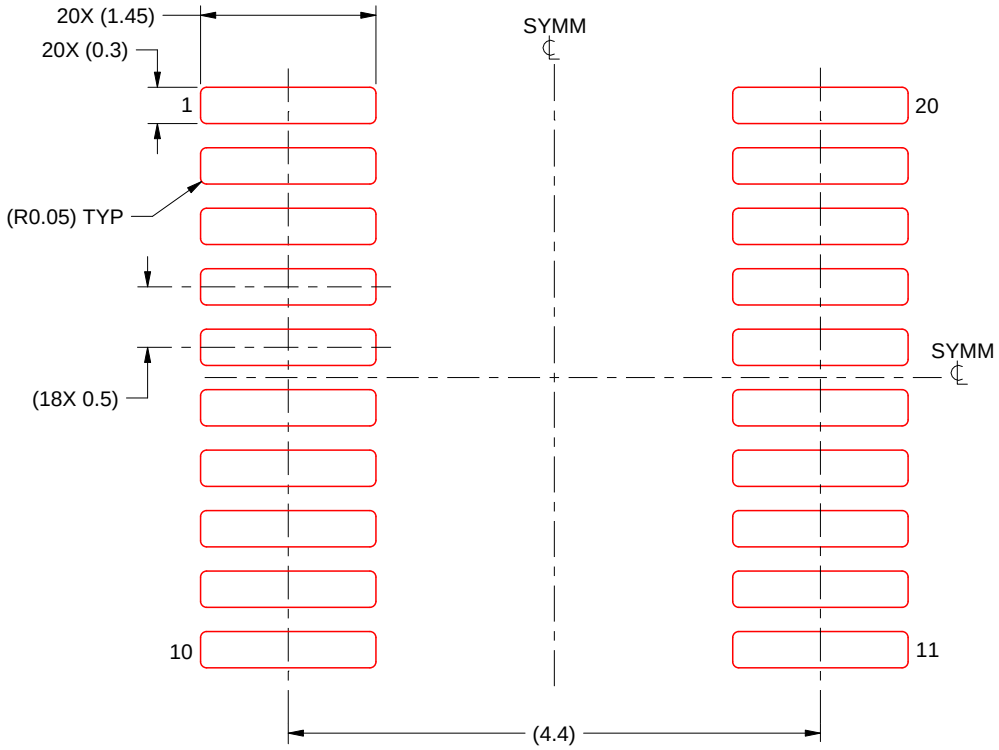

SOLDER PASTE EXAMPLE
BASED ON 0.125 mm THICK STENCIL
SCALE: 16X

4226367/A 10/2020

NOTES: (continued)

11. Laser cutting apertures with trapezoidal walls and rounded corners may offer better paste release. IPC-7525 may have alternate design recommendations.
12. Board assembly site may have different recommendations for stencil design.

IMPORTANT NOTICE AND DISCLAIMER

TI PROVIDES TECHNICAL AND RELIABILITY DATA (INCLUDING DATASHEETS), DESIGN RESOURCES (INCLUDING REFERENCE DESIGNS), APPLICATION OR OTHER DESIGN ADVICE, WEB TOOLS, SAFETY INFORMATION, AND OTHER RESOURCES “AS IS” AND WITH ALL FAULTS, AND DISCLAIMS ALL WARRANTIES, EXPRESS AND IMPLIED, INCLUDING WITHOUT LIMITATION ANY IMPLIED WARRANTIES OF MERCHANTABILITY, FITNESS FOR A PARTICULAR PURPOSE OR NON-INFRINGEMENT OF THIRD PARTY INTELLECTUAL PROPERTY RIGHTS.

These resources are intended for skilled developers designing with TI products. You are solely responsible for (1) selecting the appropriate TI products for your application, (2) designing, validating and testing your application, and (3) ensuring your application meets applicable standards, and any other safety, security, regulatory or other requirements.

These resources are subject to change without notice. TI grants you permission to use these resources only for development of an application that uses the TI products described in the resource. Other reproduction and display of these resources is prohibited. No license is granted to any other TI intellectual property right or to any third party intellectual property right. TI disclaims responsibility for, and you fully indemnify TI and its representatives against any claims, damages, costs, losses, and liabilities arising out of your use of these resources.

TI’s products are provided subject to TI’s Terms of Sale, TI’s General Quality Guidelines, or other applicable terms available either on ti.com or provided in conjunction with such TI products. TI’s provision of these resources does not expand or otherwise alter TI’s applicable warranties or warranty disclaimers for TI products. Unless TI explicitly designates a product as custom or customer-specified, TI products are standard, catalog, general purpose devices.

TI objects to and rejects any additional or different terms you may propose.

Copyright © 2026, Texas Instruments Incorporated

Last updated 10/2025