- **Bidirectional Bus Transceivers in High-Density 20-Pin Packages**
- **Inverting Logic**
- **Package Options Include Plastic Small-Outline (DW) Packages, Ceramic Chip Carriers (FK), and Standard Plastic (N) and Ceramic (J) 300-mil DIPs**

SN54ALS640B, SN54AS640 . . . J PACKAGE
SN74ALS640B, SN74AS640 . . . DW OR N PACKAGE
(TOP VIEW)

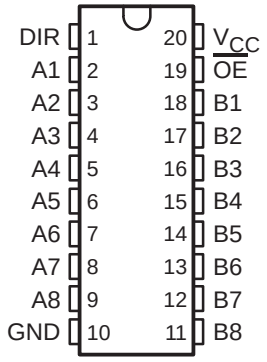

SN54ALS640B, SN54AS640 . . . FK PACKAGE
(TOP VIEW)

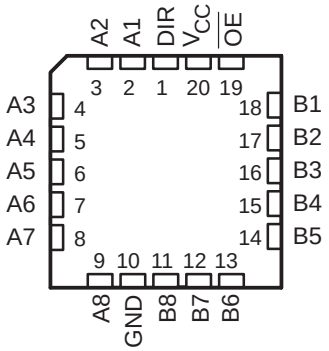

description

These octal bus transceivers are designed for asynchronous two-way communication between data buses. These devices transmit data from the A bus to the B bus or from the B bus to the A bus, depending upon the level at the direction-control (DIR) input. The output-enable ($\overline{OE}$) input can be used to disable the device so that the buses are effectively isolated.

The -1 version of the SN74ALS640B is identical to the standard version, except that the recommended maximum I_{OL} for the -1 version is increased to 48 mA. There is no -1 version of the SN54ALS640B.

The SN54ALS640B and SN54AS640 are characterized for operation over the full military temperature range of –55°C to 125°C. The SN74ALS640B and SN74AS640 are characterized for operation from 0°C to 70°C.

FUNCTION TABLE

INPUTS		OPERATION
$\overline{OE}$	DIR	
L	L	$\overline{B}$ data to A bus
L	H	$\overline{A}$ data to B bus
H	X	Isolation

PRODUCTION DATA information is current as of publication date. Products conform to specifications per the terms of Texas Instruments standard warranty. Production processing does not necessarily include testing of all parameters.

Copyright © 1995, Texas Instruments Incorporated

logic symbol†

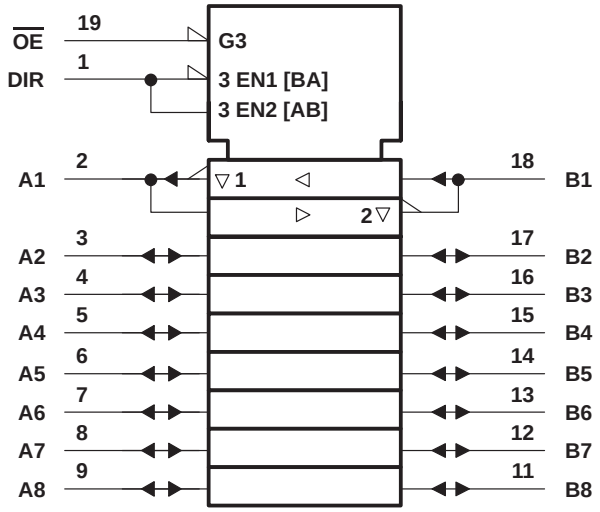

logic diagram (positive logic)

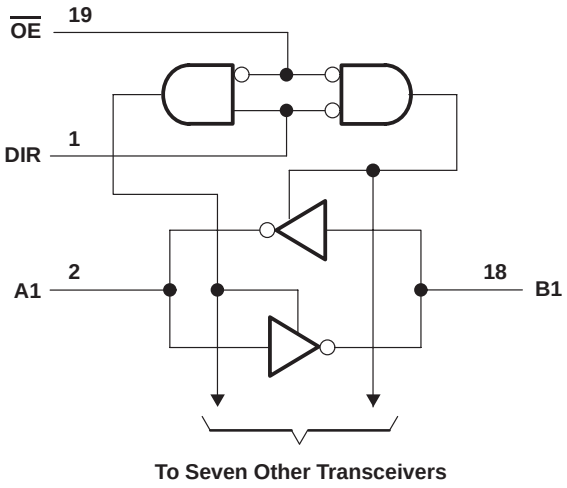

† This symbol is in accordance with ANSI/IEEE Std 91-1984 and IEC Publication 617-12.

absolute maximum ratings over operating free-air temperature range (unless otherwise noted)‡

Supply voltage, V_{CC} . . . . . 7 V
Input voltage, V_I: All inputs . . . . . 7 V
I/O ports . . . . . 5.5 V
Operating free-air temperature range, T_A: SN54ALS640B . . . . . –55°C to 125°C
SN74ALS640B . . . . . 0°C to 70°C
Storage temperature range . . . . . –65°C to 150°C

‡ Stresses beyond those listed under “absolute maximum ratings” may cause permanent damage to the device. These are stress ratings only, and functional operation of the device at these or any other conditions beyond those indicated under “recommended operating conditions” is not implied. Exposure to absolute-maximum-rated conditions for extended periods may affect device reliability.

recommended operating conditions

		SN54ALS640B			SN74ALS640B			UNIT
		MIN	NOM	MAX	MIN	NOM	MAX	
V_{CC}	Supply voltage	4.5	5	5.5	4.5	5	5.5	V
V_{IH}	High-level input voltage	2			2			V
V_{IL}	Low-level input voltage			0.7			0.8	V
I_{OH}	High-level output current			–12			–15	mA
I_{OL}	Low-level output current			12			24	mA
							48§	
T_A	Operating free-air temperature	–55		125	0		70	°C

§ Applies only to the -1 version and only if V_{CC} is between 4.75 V and 5.25 V

electrical characteristics over recommended operating free-air temperature range (unless otherwise noted)

PARAMETER		TEST CONDITIONS		SN54ALS640B			SN74ALS640B			UNIT
				MIN	TYP†	MAX	MIN	TYP†	MAX	
V_{IK}		V_{CC} = 4.5 V,	I_I = –18 mA			–1.5			–1.5	V
V_{OH}		V_{CC} = 4.5 V to 5.5 V,	I_{OH} = –0.4 mA	V_{CC} –2			V_{CC} –2			V
		V_{CC} = 4.5 V	I_{OH} = –3 mA	2.4	3.2		2.4	3.2		
			I_{OH} = –12 mA	2						
			I_{OH} = –15 mA				2			
V_{OL}		V_{CC} = 4.5 V	I_{OL} = 12 mA		0.25	0.4		0.25	0.4	V
			I_{OL} = 24 mA					0.35	0.5	
			I_{OL} = 48 mA‡					0.35	0.5	
I_I	Control inputs	V_{CC} = 5.5 V	V_I = 7 V			0.1			0.1	mA
	A or B ports		V_I = 5.5 V			0.1			0.1	
I_{IH}	Control inputs	V_{CC} = 5.5 V,	V_I = 2.7 V			20			20	µA
	A or B ports§					20			20	
I_{IL}	Control inputs	V_{CC} = 5.5 V,	V_I = 0.4 V			–0.1			–0.1	mA
	A or B ports§					–0.1			–0.1	
I_O¶		V_{CC} = 5.5 V,	V_O = 2.25 V	–20		–112	–30		–112	mA
I_{CC}		V_{CC} = 5.5 V	Outputs high		19	50		19	45	mA
			Outputs low		27	60		27	55	
			Outputs disabled		28	55		28	50	

† All typical values are at V_{CC} = 5 V, T_A = 25°C.
‡ Applies only to the -1 version and only if V_{CC} is between 4.75 V and 5.25 V
§ For I/O ports, the parameters I_{IH} and I_{IL} include the off-state output current.
¶ The output conditions have been chosen to produce a current that closely approximates one half of the true short-circuit output current, I_{OS}.

switching characteristics (see Figure 1)

PARAMETER	FROM (INPUT)	TO (OUTPUT)	V_{CC} = 4.5 V to 5.5 V, C_L = 50 pF, R1 = 500 Ω, R2 = 500 Ω, T_A = MIN to MAX#				UNIT
			SN54ALS640B		SN74ALS640B		
			MIN	MAX	MIN	MAX	
t_{PLH}	A or B	B or A	2	14	2	11	ns
t_{PHL}			2	13	2	10	
t_{PZH}	$\overline{OE}$	A or B	4	25	4	21	ns
t_{PZL}			5	27	5	24	
t_{PHZ}	$\overline{OE}$	A or B	2	12	2	10	ns
t_{PLZ}			3	20	3	15	

For conditions shown as MIN or MAX, use the appropriate value specified under recommended operating conditions.

absolute maximum ratings over operating free-air temperature range (unless otherwise noted)†

Supply voltage, V_{CC} . . . . . 7 V
Input voltage, V_I: All inputs . . . . . 7 V
I/O ports . . . . . 5.5 V
Operating free-air temperature range, T_A: SN54AS640 . . . . . –55°C to 125°C
SN74AS640 . . . . . 0°C to 70°C
Storage temperature range . . . . . –65°C to 150°C

† Stresses beyond those listed under "absolute maximum ratings" may cause permanent damage to the device. These are stress ratings only, and functional operation of the device at these or any other conditions beyond those indicated under "recommended operating conditions" is not implied. Exposure to absolute-maximum-rated conditions for extended periods may affect device reliability.

recommended operating conditions

		SN54AS640			SN74AS640			UNIT
		MIN	NOM	MAX	MIN	NOM	MAX	
V_{CC}	Supply voltage	4.5	5	5.5	4.5	5	5.5	V
V_{IH}	High-level input voltage	2			2			V
V_{IL}	Low-level input voltage			0.8			0.8	V
I_{OH}	High-level output current			–12			–15	mA
I_{OL}	Low-level output current			48			64	mA
T_A	Operating free-air temperature	–55		125	0		70	°C

electrical characteristics over recommended operating free-air temperature range (unless otherwise noted)

PARAMETER		TEST CONDITIONS		SN54AS640			SN74AS640			UNIT
				MIN	TYP‡	MAX	MIN	TYP‡	MAX	
V_{IK}		V_{CC} = 4.5 V,	I_I = –18 mA			–1.2			–1.2	V
V_{OH}		V_{CC} = 4.5 V,	I_{OH} = –2 mA	V_{CC} –2						V
		V_{CC} = 4.5 V to 5.5 V,	I_{OH} = –2 mA				V_{CC} –2			
		V_{CC} = 4.5 V	I_{OH} = –3 mA	2.4	3.2		2.4	3.2		
			I_{OH} = –12 mA	2.4						
			I_{OH} = –15 mA				2.4			
V_{OL}		V_{CC} = 4.5 V	I_{OL} = 48 mA		0.3	0.55				V
			I_{OL} = 64 mA					0.35	0.55	
I_I	Control inputs	V_{CC} = 5.5 V	V_I = 7 V			0.1			0.1	mA
	A or B ports		V_I = 5.5 V			0.1			0.1	
I_{IH}	Control inputs	V_{CC} = 5.5 V,	V_I = 2.7 V			20			20	µA
	A or B ports§					70			70	
I_{IL}	Control inputs	V_{CC} = 5.5 V,	V_I = 0.4 V			–0.5			–0.5	mA
	A or B ports§					–0.75			–0.75	
I_O¶		V_{CC} = 5.5 V,	V_O = 2.25 V	–50		–150	–50		–150	mA
I_{CC}		V_{CC} = 5.5 V	Outputs high		37	58		37	58	mA
			Outputs low		78	123		78	123	
			Outputs disabled		51	80		51	80	

‡ All typical values are at V_{CC} = 5 V, T_A = 25°C.
§ For I/O ports, the parameters I_{IH} and I_{IL} include the off-state output current.
¶ The output conditions have been chosen to produce a current that closely approximates one half of the true short-circuit output current, I_{OS}.

switching characteristics (see Figure 1)

PARAMETER	FROM (INPUT)	TO (OUTPUT)	V_{CC} = 4.5 V to 5.5 V, C_L = 50 pF, R1 = 500 Ω, R2 = 500 Ω, T_A = MIN to MAX†				UNIT
			SN54AS640		SN74AS640		
			MIN	MAX	MIN	MAX	
t_{PLH}	A or B	B or A	1	8	2	7	ns
t_{PHL}			1	7	2	6	
t_{PZH}	$\overline{OE}$	A or B	2	10	2	8	ns
t_{PZL}			2	12	2	10	
t_{PHZ}	$\overline{OE}$	A or B	2	9	2	8	ns
t_{PLZ}			2	16	2	13	

† For conditions shown as MIN or MAX, use the appropriate value specified under recommended operating conditions.

PARAMETER MEASUREMENT INFORMATION
SERIES 54ALS/74ALS AND 54AS/74AS DEVICES

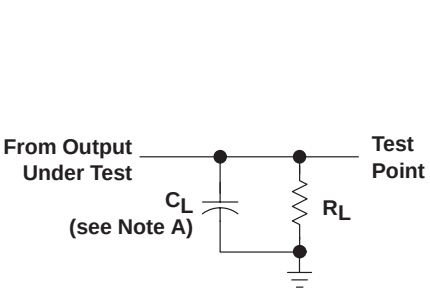

LOAD CIRCUIT FOR
BI-STATE
TOTEM-POLE OUTPUTS

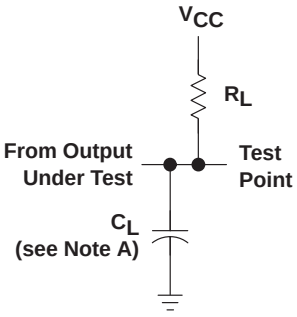

LOAD CIRCUIT
FOR OPEN-COLLECTOR OUTPUTS

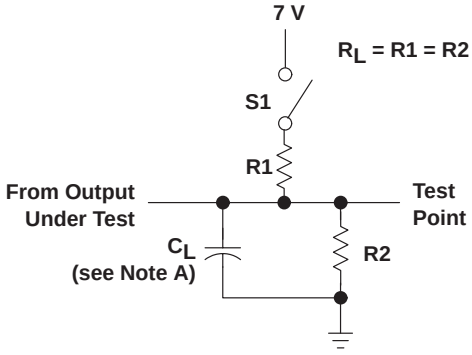

LOAD CIRCUIT
FOR 3-STATE OUTPUTS

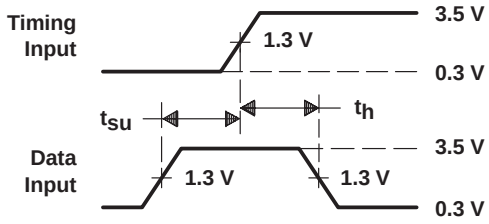

VOLTAGE WAVEFORMS
SETUP AND HOLD TIMES

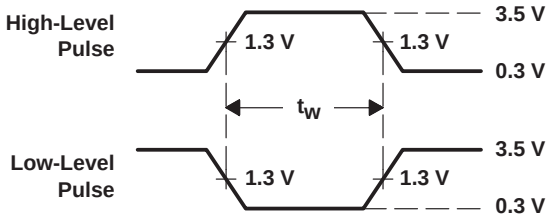

VOLTAGE WAVEFORMS
PULSE DURATIONS

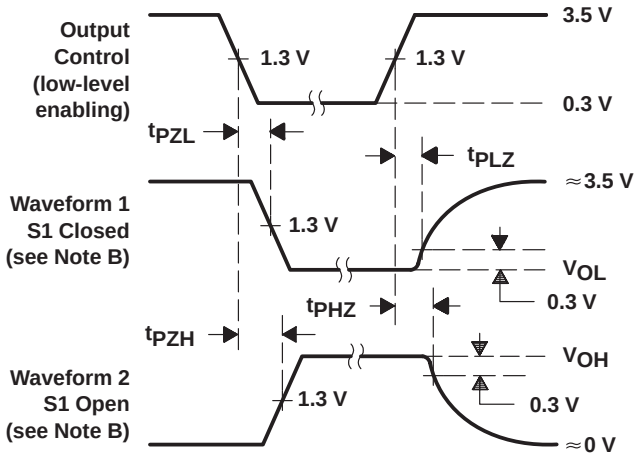

VOLTAGE WAVEFORMS
ENABLE AND DISABLE TIMES, 3-STATE OUTPUTS

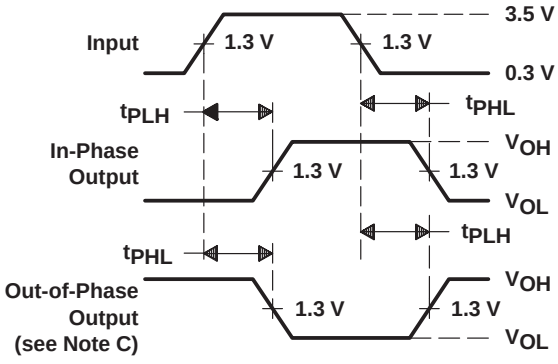

VOLTAGE WAVEFORMS
PROPAGATION DELAY TIMES

NOTES: A. C_L includes probe and jig capacitance.
B. Waveform 1 is for an output with internal conditions such that the output is low except when disabled by the output control. Waveform 2 is for an output with internal conditions such that the output is high except when disabled by the output control.
C. When measuring propagation delay items of 3-state outputs, switch S1 is open.
D. All input pulses have the following characteristics: PRR ≤ 1 MHz, $t_r = t_f$ = 2 ns, duty cycle = 50%.
E. The outputs are measured one at a time with one transition per measurement.

Figure 1. Load Circuits and Voltage Waveforms

PACKAGING INFORMATION

Orderable part number	Status (1)	Material type (2)	Package | Pins	Package qty | Carrier	RoHS (3)	Lead finish/ Ball material (4)	MSL rating/ Peak reflow (5)	Op temp (°C)	Part marking (6)
5962-8872701RA	Active	Production	CDIP (J) | 20	20 | TUBE	No	SNPB	N/A for Pkg Type	-55 to 125	5962-8872701RA SNJ54ALS640BJ
5962-8955301RA	Active	Production	CDIP (J) | 20	20 | TUBE	No	SNPB	N/A for Pkg Type	-55 to 125	5962-8955301RA SNJ54AS640J
SN54ALS640BJ	Active	Production	CDIP (J) | 20	20 | TUBE	No	SNPB	N/A for Pkg Type	-55 to 125	SN54ALS640BJ
SN54ALS640BJ.A	Active	Production	CDIP (J) | 20	20 | TUBE	No	SNPB	N/A for Pkg Type	-55 to 125	SN54ALS640BJ
SN74ALS640B-1DW	Obsolete	Production	SOIC (DW) | 20	-	-	Call TI	Call TI	0 to 70	ALS640B-1
SN74ALS640B-1DWR	Active	Production	SOIC (DW) | 20	2000 | LARGE T&R	Yes	NIPDAU	Level-1-260C-UNLIM	0 to 70	ALS640B-1
SN74ALS640B-1DWR.A	Active	Production	SOIC (DW) | 20	2000 | LARGE T&R	Yes	NIPDAU	Level-1-260C-UNLIM	0 to 70	ALS640B-1
SN74ALS640B-1N	Active	Production	PDIP (N) | 20	20 | TUBE	Yes	NIPDAU	N/A for Pkg Type	0 to 70	SN74ALS640B-1N
SN74ALS640B-1N.A	Active	Production	PDIP (N) | 20	20 | TUBE	Yes	NIPDAU	N/A for Pkg Type	0 to 70	SN74ALS640B-1N
SN74ALS640B-1NSR	Active	Production	SOP (NS) | 20	2000 | LARGE T&R	Yes	NIPDAU	Level-1-260C-UNLIM	0 to 70	ALS640B-1
SN74ALS640B-1NSR.A	Active	Production	SOP (NS) | 20	2000 | LARGE T&R	Yes	NIPDAU	Level-1-260C-UNLIM	0 to 70	ALS640B-1
SN74ALS640BDW	Obsolete	Production	SOIC (DW) | 20	-	-	Call TI	Call TI	0 to 70	ALS640B
SN74ALS640BDWR	Active	Production	SOIC (DW) | 20	2000 | LARGE T&R	Yes	NIPDAU	Level-1-260C-UNLIM	0 to 70	ALS640B
SN74ALS640BDWR.A	Active	Production	SOIC (DW) | 20	2000 | LARGE T&R	Yes	NIPDAU	Level-1-260C-UNLIM	0 to 70	ALS640B
SN74ALS640BN	Active	Production	PDIP (N) | 20	20 | TUBE	Yes	NIPDAU	N/A for Pkg Type	0 to 70	SN74ALS640BN
SN74ALS640BN.A	Active	Production	PDIP (N) | 20	20 | TUBE	Yes	NIPDAU	N/A for Pkg Type	0 to 70	SN74ALS640BN
SN74ALS640BNSR	Active	Production	SOP (NS) | 20	2000 | LARGE T&R	Yes	NIPDAU	Level-1-260C-UNLIM	0 to 70	ALS640B
SN74ALS640BNSR.A	Active	Production	SOP (NS) | 20	2000 | LARGE T&R	Yes	NIPDAU	Level-1-260C-UNLIM	0 to 70	ALS640B
SN74AS640N	Active	Production	PDIP (N) | 20	20 | TUBE	Yes	NIPDAU	N/A for Pkg Type	0 to 70	SN74AS640N
SN74AS640N.A	Active	Production	PDIP (N) | 20	20 | TUBE	Yes	NIPDAU	N/A for Pkg Type	0 to 70	SN74AS640N
SNJ54ALS640BJ	Active	Production	CDIP (J) | 20	20 | TUBE	No	SNPB	N/A for Pkg Type	-55 to 125	5962-8872701RA SNJ54ALS640BJ
SNJ54ALS640BJ.A	Active	Production	CDIP (J) | 20	20 | TUBE	No	SNPB	N/A for Pkg Type	-55 to 125	5962-8872701RA SNJ54ALS640BJ
SNJ54AS640J	Active	Production	CDIP (J) | 20	20 | TUBE	No	SNPB	N/A for Pkg Type	-55 to 125	5962-8955301RA SNJ54AS640J
SNJ54AS640J.A	Active	Production	CDIP (J) | 20	20 | TUBE	No	SNPB	N/A for Pkg Type	-55 to 125	5962-8955301RA SNJ54AS640J

(1) **Status:** For more details on status, see our product life cycle.

(2) **Material type:** When designated, preproduction parts are prototypes/experimental devices, and are not yet approved or released for full production. Testing and final process, including without limitation quality assurance, reliability performance testing, and/or process qualification, may not yet be complete, and this item is subject to further changes or possible discontinuation. If available for ordering, purchases will be subject to an additional waiver at checkout, and are intended for early internal evaluation purposes only. These items are sold without warranties of any kind.

(3) **RoHS values:** Yes, No, RoHS Exempt. See the TI RoHS Statement for additional information and value definition.

(4) **Lead finish/Ball material:** Parts may have multiple material finish options. Finish options are separated by a vertical ruled line. Lead finish/Ball material values may wrap to two lines if the finish value exceeds the maximum column width.

(5) **MSL rating/Peak reflow:** The moisture sensitivity level ratings and peak solder (reflow) temperatures. In the event that a part has multiple moisture sensitivity ratings, only the lowest level per JEDEC standards is shown. Refer to the shipping label for the actual reflow temperature that will be used to mount the part to the printed circuit board.

(6) **Part marking:** There may be an additional marking, which relates to the logo, the lot trace code information, or the environmental category of the part.

Multiple part markings will be inside parentheses. Only one part marking contained in parentheses and separated by a "~" will appear on a part. If a line is indented then it is a continuation of the previous line and the two combined represent the entire part marking for that device.

Important Information and Disclaimer: The information provided on this page represents TI's knowledge and belief as of the date that it is provided. TI bases its knowledge and belief on information provided by third parties, and makes no representation or warranty as to the accuracy of such information. Efforts are underway to better integrate information from third parties. TI has taken and continues to take reasonable steps to provide representative and accurate information but may not have conducted destructive testing or chemical analysis on incoming materials and chemicals. TI and TI suppliers consider certain information to be proprietary, and thus CAS numbers and other limited information may not be available for release.

In no event shall TI's liability arising out of such information exceed the total purchase price of the TI part(s) at issue in this document sold by TI to Customer on an annual basis.

OTHER QUALIFIED VERSIONS OF SN54ALS640B, SN54AS640, SN74ALS640B, SN74AS640 :

- Catalog : SN74ALS640B, SN74AS640
- Military : SN54ALS640B, SN54AS640

NOTE: Qualified Version Definitions:

- Catalog - TI's standard catalog product
- Military - QML certified for Military and Defense Applications

TAPE AND REEL INFORMATION

REEL DIMENSIONS

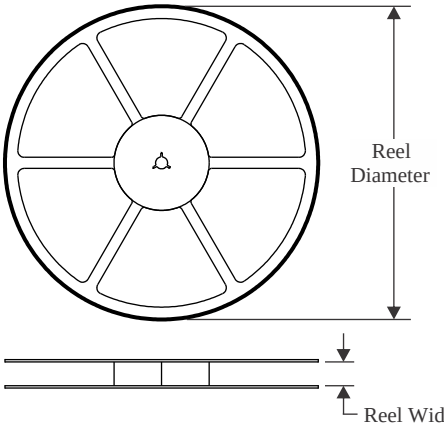

TAPE DIMENSIONS

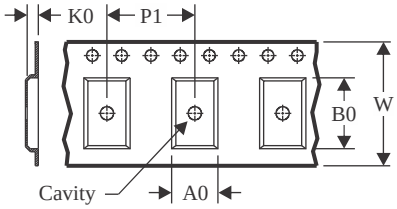

A0	Dimension designed to accommodate the component width
B0	Dimension designed to accommodate the component length
K0	Dimension designed to accommodate the component thickness
W	Overall width of the carrier tape
P1	Pitch between successive cavity centers

QUADRANT ASSIGNMENTS FOR PIN 1 ORIENTATION IN TAPE

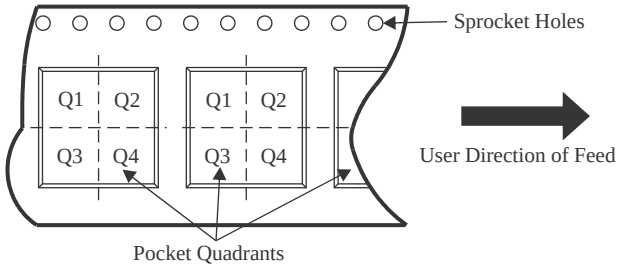

*All dimensions are nominal

Device	Package Type	Package Drawing	Pins	SPQ	Reel Diameter (mm)	Reel Width W1 (mm)	A0 (mm)	B0 (mm)	K0 (mm)	P1 (mm)	W (mm)	Pin1 Quadrant
SN74ALS640B-1DWR	SOIC	DW	20	2000	330.0	24.4	10.8	13.3	2.7	12.0	24.0	Q1
SN74ALS640B-1NSR	SOP	NS	20	2000	330.0	24.4	8.4	13.0	2.5	12.0	24.0	Q1
SN74ALS640BDWR	SOIC	DW	20	2000	330.0	24.4	10.8	13.3	2.7	12.0	24.0	Q1
SN74ALS640BNSR	SOP	NS	20	2000	330.0	24.4	8.4	13.0	2.5	12.0	24.0	Q1

TAPE AND REEL BOX DIMENSIONS

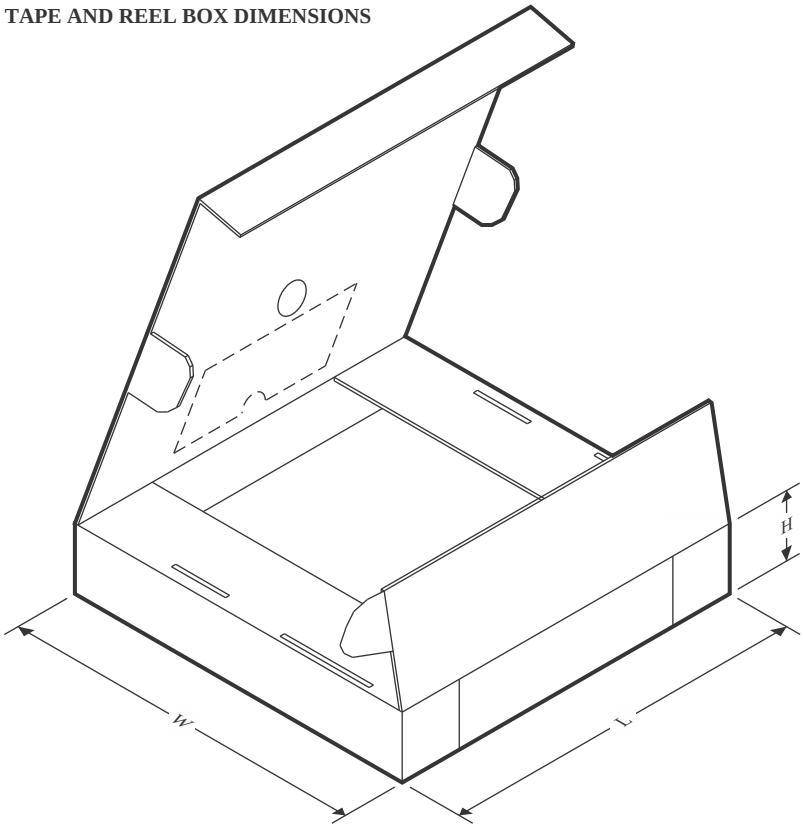

*All dimensions are nominal

Device	Package Type	Package Drawing	Pins	SPQ	Length (mm)	Width (mm)	Height (mm)
SN74ALS640B-1DWR	SOIC	DW	20	2000	356.0	356.0	45.0
SN74ALS640B-1NSR	SOP	NS	20	2000	356.0	356.0	45.0
SN74ALS640BDWR	SOIC	DW	20	2000	356.0	356.0	45.0
SN74ALS640BNSR	SOP	NS	20	2000	356.0	356.0	45.0

TUBE

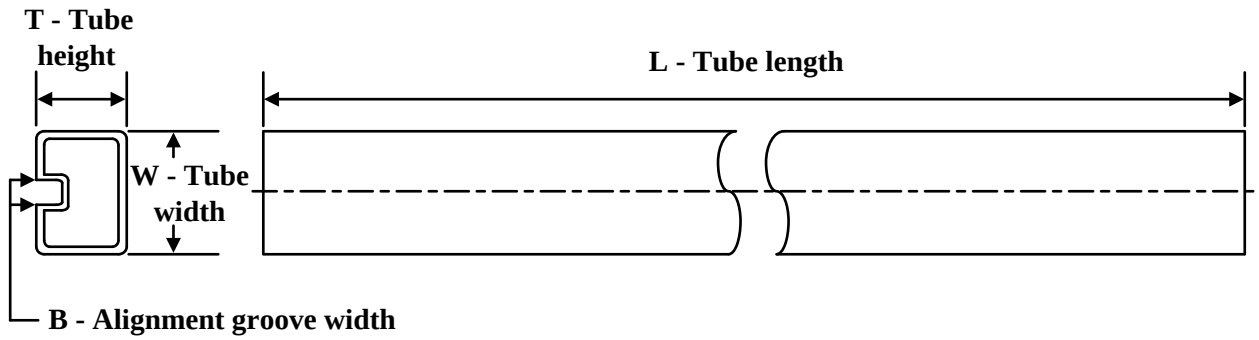

*All dimensions are nominal

Device	Package Name	Package Type	Pins	SPQ	L (mm)	W (mm)	T (µm)	B (mm)
SN74ALS640B-1N	N	PDIP	20	20	506	13.97	11230	4.32
SN74ALS640B-1N.A	N	PDIP	20	20	506	13.97	11230	4.32
SN74ALS640BN	N	PDIP	20	20	506	13.97	11230	4.32
SN74ALS640BN.A	N	PDIP	20	20	506	13.97	11230	4.32
SN74AS640N	N	PDIP	20	20	506	13.97	11230	4.32
SN74AS640N.A	N	PDIP	20	20	506	13.97	11230	4.32

N (R–PDIP–T**)

PLASTIC DUAL–IN–LINE PACKAGE

16 PINS SHOWN

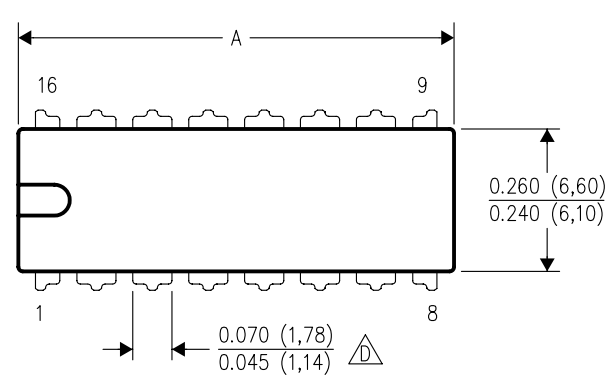

DIM \ PINS **	14	16	18	20
A MAX	0.775 (19,69)	0.775 (19,69)	0.920 (23,37)	1.060 (26,92)
A MIN	0.745 (18,92)	0.745 (18,92)	0.850 (21,59)	0.940 (23,88)
MS–001 VARIATION (C)	AA	BB	AC	AD

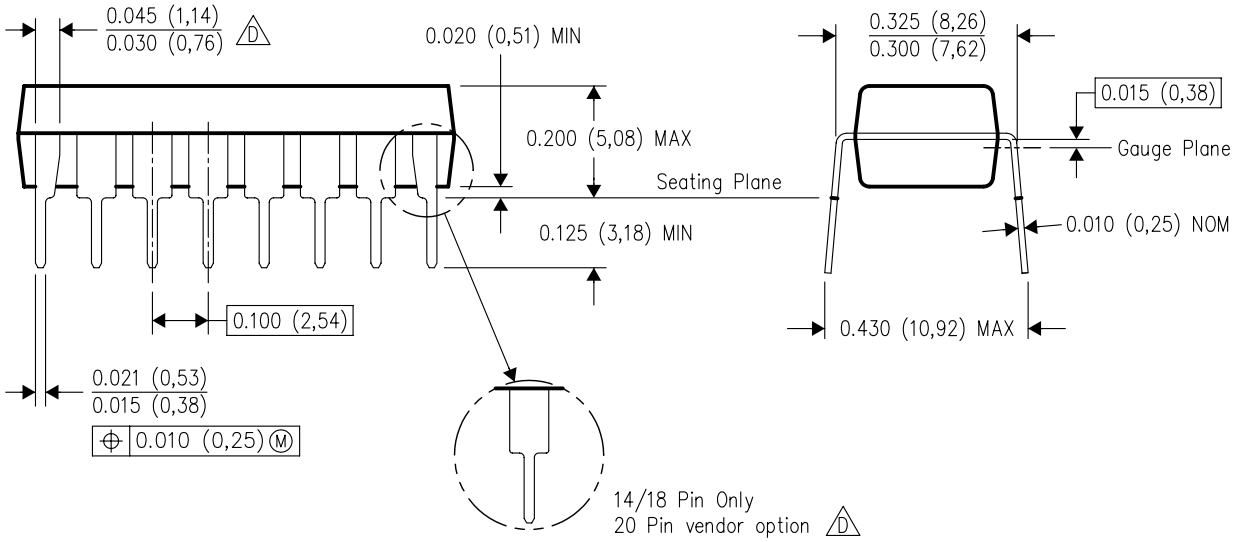

4040049/E 12/2002

NOTES:
A. All linear dimensions are in inches (millimeters).
B. This drawing is subject to change without notice.
C. Falls within JEDEC MS–001, except 18 and 20 pin minimum body length (Dim A).
D. The 20 pin end lead shoulder width is a vendor option, either half or full width.

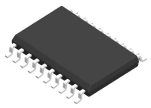

PACKAGE OUTLINE

DW0020A

SOIC - 2.65 mm max height

SOIC

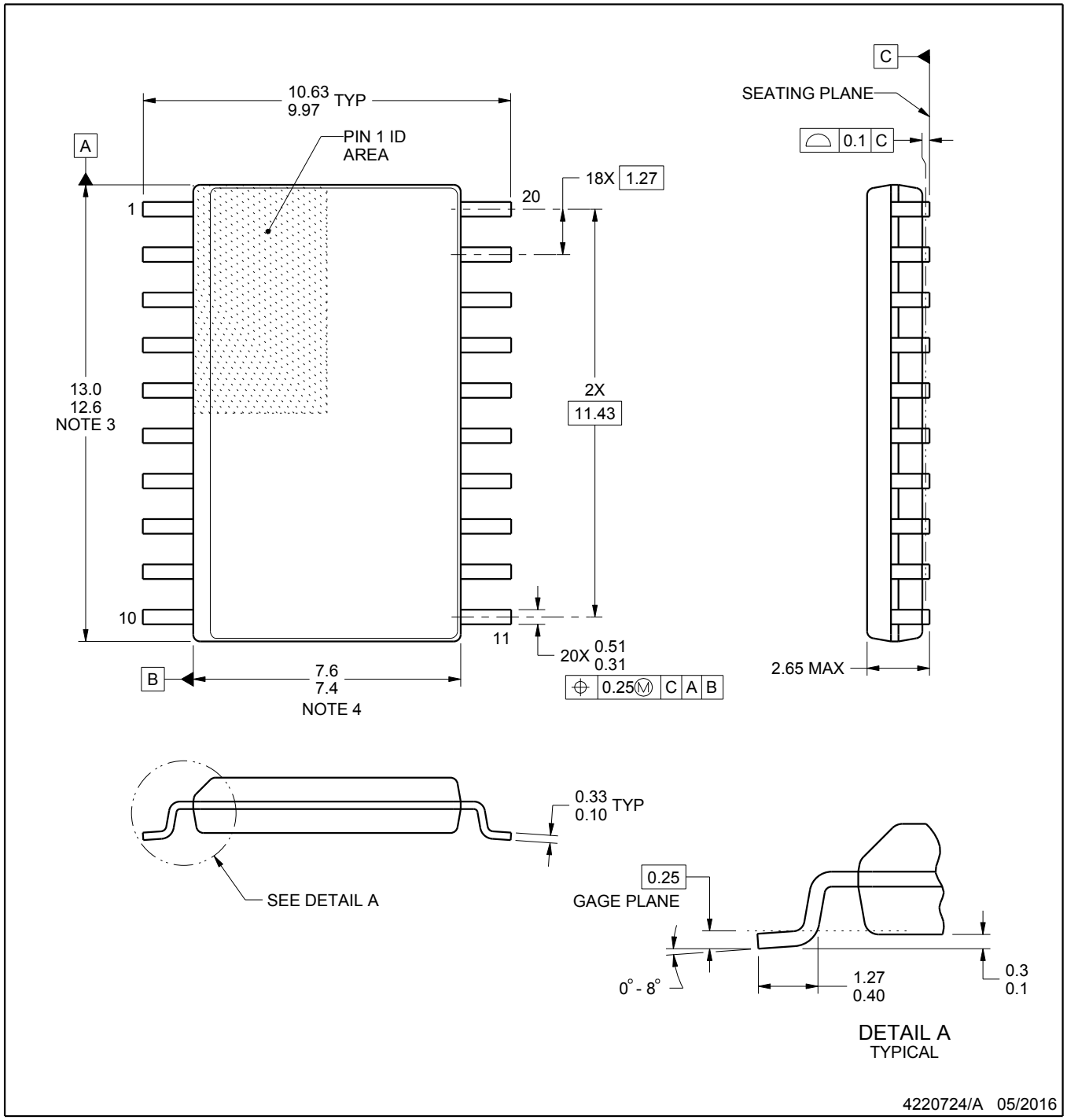

NOTES:

1. All linear dimensions are in millimeters. Dimensions in parenthesis are for reference only. Dimensioning and tolerancing per ASME Y14.5M.
2. This drawing is subject to change without notice.
3. This dimension does not include mold flash, protrusions, or gate burrs. Mold flash, protrusions, or gate burrs shall not exceed 0.15 mm per side.
4. This dimension does not include interlead flash. Interlead flash shall not exceed 0.43 mm per side.
5. Reference JEDEC registration MS-013.

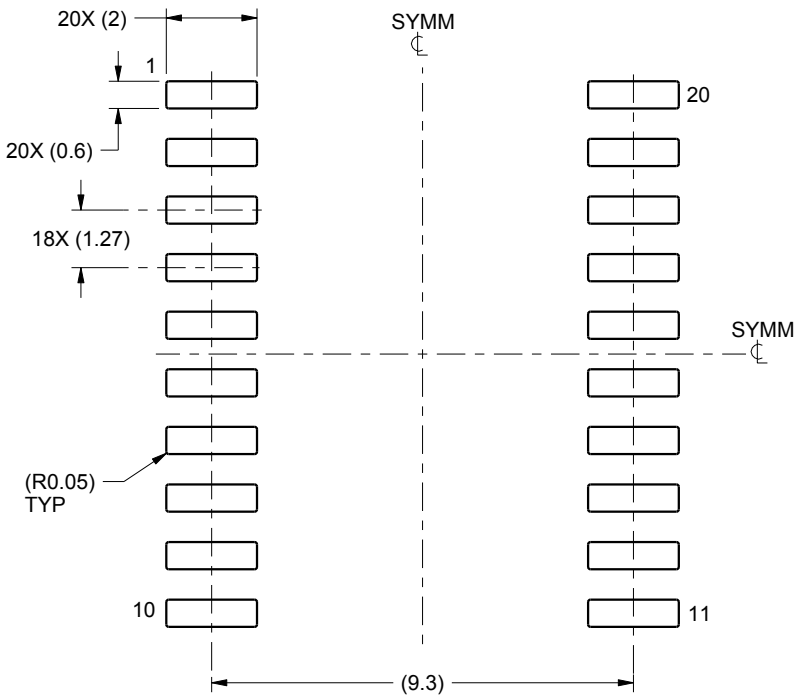

LAND PATTERN EXAMPLE
SCALE:6X

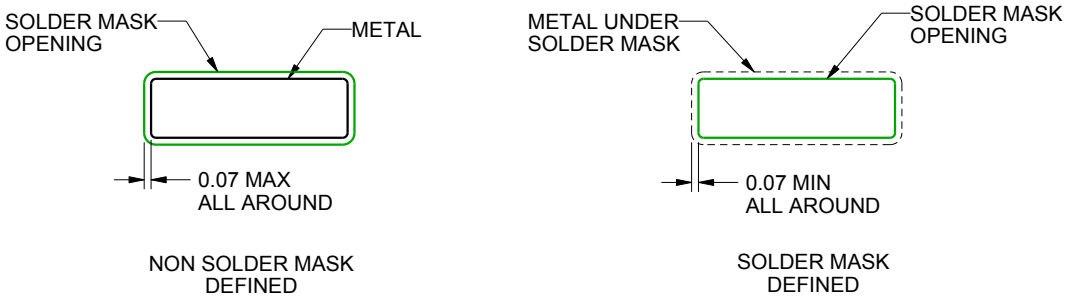

SOLDER MASK DETAILS

4220724/A 05/2016

NOTES: (continued)

6. Publication IPC-7351 may have alternate designs.
7. Solder mask tolerances between and around signal pads can vary based on board fabrication site.

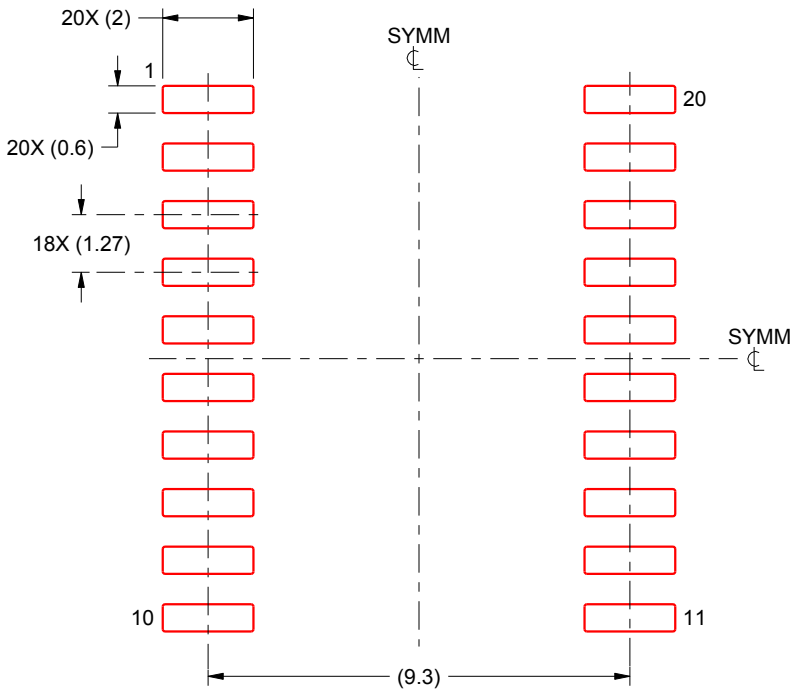

SOLDER PASTE EXAMPLE
BASED ON 0.125 mm THICK STENCIL
SCALE:6X

4220724/A 05/2016

NOTES: (continued)

8. Laser cutting apertures with trapezoidal walls and rounded corners may offer better paste release. IPC-7525 may have alternate design recommendations.
9. Board assembly site may have different recommendations for stencil design.

MECHANICAL DATA

NS (R-PDSO-G)** **PLASTIC SMALL-OUTLINE PACKAGE**

14-PINS SHOWN

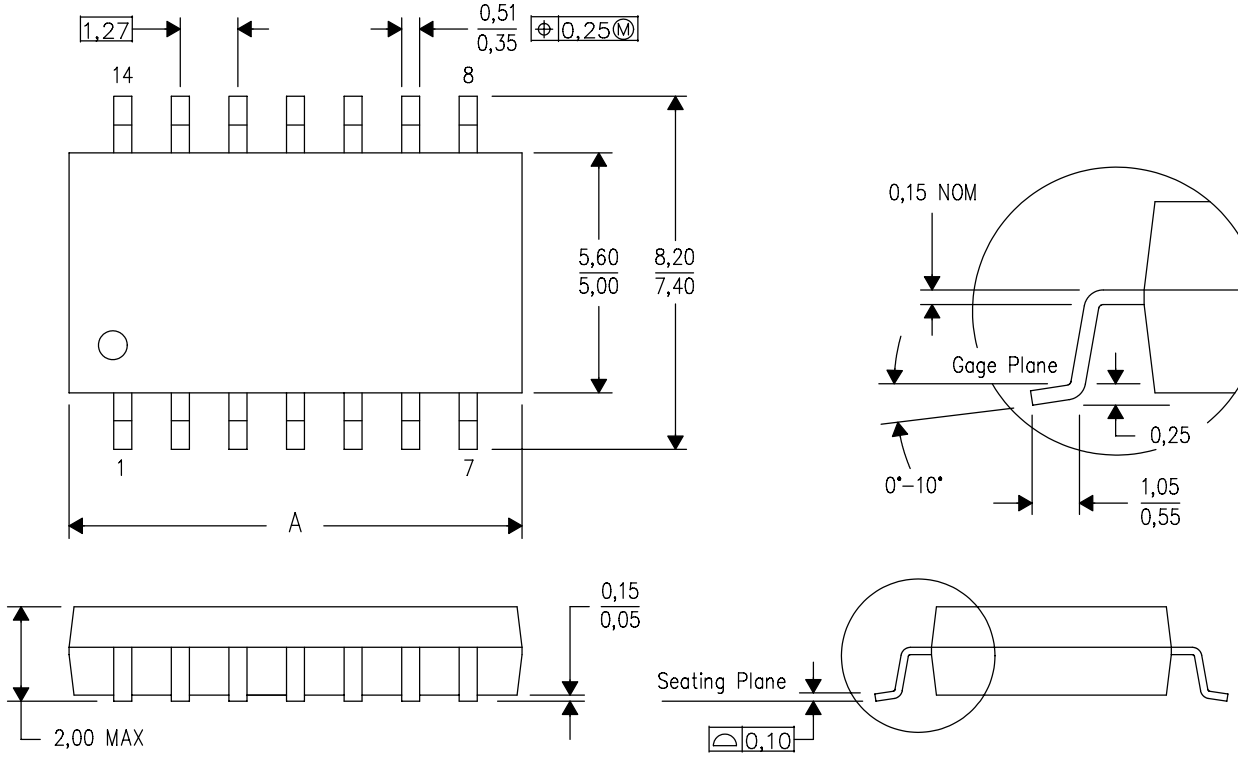

DIM \ PINS **	14	16	20	24
A MAX	10,50	10,50	12,90	15,30
A MIN	9,90	9,90	12,30	14,70

4040062/C 03/03

NOTES:
A. All linear dimensions are in millimeters.
B. This drawing is subject to change without notice.
C. Body dimensions do not include mold flash or protrusion, not to exceed 0,15.

J (R–GDIP–T**)

14 LEADS SHOWN

CERAMIC DUAL IN–LINE PACKAGE

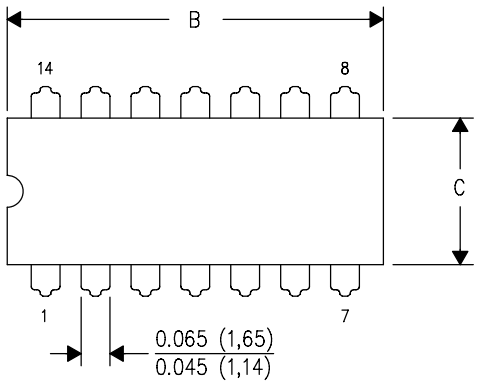

DIM \ PINS **	14	16	18	20
A	0.300 (7,62) BSC	0.300 (7,62) BSC	0.300 (7,62) BSC	0.300 (7,62) BSC
B MAX	0.785 (19,94)	.840 (21,34)	0.960 (24,38)	1.060 (26,92)
B MIN	—	—	—	—
C MAX	0.300 (7,62)	0.300 (7,62)	0.310 (7,87)	0.300 (7,62)
C MIN	0.245 (6,22)	0.245 (6,22)	0.220 (5,59)	0.245 (6,22)

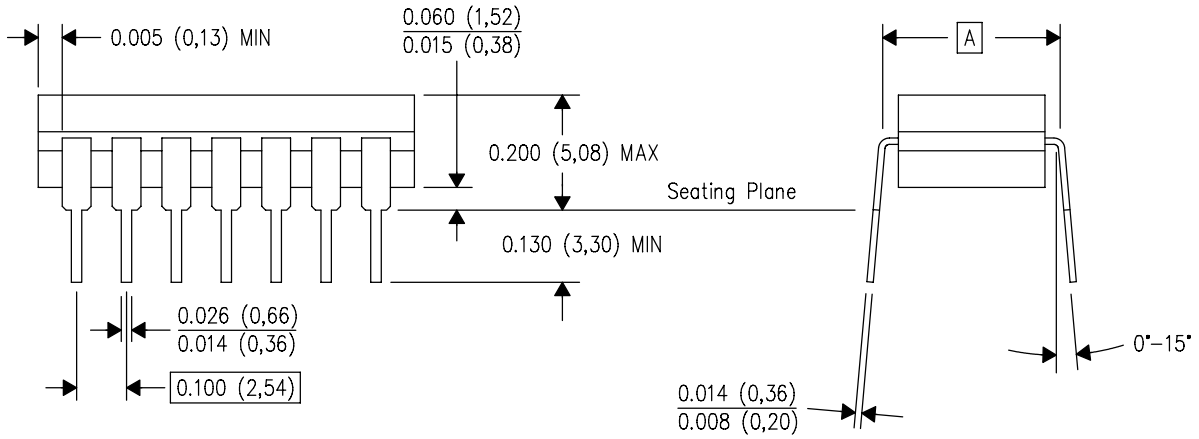

4040083/F 03/03

NOTES:
A. All linear dimensions are in inches (millimeters).
B. This drawing is subject to change without notice.
C. This package is hermetically sealed with a ceramic lid using glass frit.
D. Index point is provided on cap for terminal identification only on press ceramic glass frit seal only.
E. Falls within MIL STD 1835 GDIP1–T14, GDIP1–T16, GDIP1–T18 and GDIP1–T20.

IMPORTANT NOTICE AND DISCLAIMER

TI PROVIDES TECHNICAL AND RELIABILITY DATA (INCLUDING DATASHEETS), DESIGN RESOURCES (INCLUDING REFERENCE DESIGNS), APPLICATION OR OTHER DESIGN ADVICE, WEB TOOLS, SAFETY INFORMATION, AND OTHER RESOURCES “AS IS” AND WITH ALL FAULTS, AND DISCLAIMS ALL WARRANTIES, EXPRESS AND IMPLIED, INCLUDING WITHOUT LIMITATION ANY IMPLIED WARRANTIES OF MERCHANTABILITY, FITNESS FOR A PARTICULAR PURPOSE OR NON-INFRINGEMENT OF THIRD PARTY INTELLECTUAL PROPERTY RIGHTS.

These resources are intended for skilled developers designing with TI products. You are solely responsible for (1) selecting the appropriate TI products for your application, (2) designing, validating and testing your application, and (3) ensuring your application meets applicable standards, and any other safety, security, regulatory or other requirements.

These resources are subject to change without notice. TI grants you permission to use these resources only for development of an application that uses the TI products described in the resource. Other reproduction and display of these resources is prohibited. No license is granted to any other TI intellectual property right or to any third party intellectual property right. TI disclaims responsibility for, and you fully indemnify TI and its representatives against any claims, damages, costs, losses, and liabilities arising out of your use of these resources.

TI’s products are provided subject to TI’s Terms of Sale, TI’s General Quality Guidelines, or other applicable terms available either on ti.com or provided in conjunction with such TI products. TI’s provision of these resources does not expand or otherwise alter TI’s applicable warranties or warranty disclaimers for TI products. Unless TI explicitly designates a product as custom or customer-specified, TI products are standard, catalog, general purpose devices.

TI objects to and rejects any additional or different terms you may propose.

Copyright © 2026, Texas Instruments Incorporated

Last updated 10/2025