SINGLE BILATERAL ANALOG SWITCH

FEATURES

- **Available in the Texas Instruments NanoFree™ Package**
- **Wide V_{CC} Range of 0.8 V to 2.7 V**
- **Sub-1-V Operable**
- **Low Power Consumption, 10-μA Max I_{CC}**
- **High On-Off Output Voltage Ratio**
- **High Degree of Linearity**
- **High Speed – Max 0.2 ns (V_{CC} = 1.8 V, C_L = 15 pF)**
- **Low On-State Impedance – Typically 9 Ω (V_{CC} = 2.3 V)**
- **Latch-Up Performance Exceeds 100 mA Per JESD 78, Class II**
- **ESD Protection Exceeds JESD 22**
  - **2000-V Human-Body Model (A114-A)**
  - **200-V Machine Model (A115-A)**
  - **1000-V Charged-Device Model (C101)**

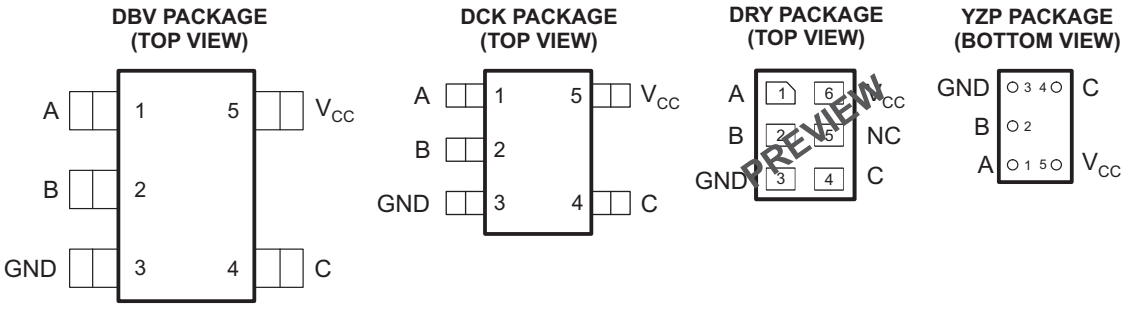

See mechanical drawings for dimensions.
NC– No internal connection

DESCRIPTION/ORDERING INFORMATION

This single analog switch is operational at 0.8-V to 2.7-V V_{CC}, but is designed specifically for 1.65-V to 1.95-V V_{CC} operation.

The SN74AUC1G66 can handle both analog and digital signals. The combined AC and DC signal has to be between V_{CC} and GND for it to be transmitted in either direction.

NanoFree™ package technology is a major breakthrough in IC packaging concepts, using the die as the package.

Applications include signal gating, chopping, modulation or demodulation (modem), and signal multiplexing for analog-to-digital and digital-to-analog conversion systems.

Please be aware that an important notice concerning availability, standard warranty, and use in critical applications of Texas Instruments semiconductor products and disclaimers thereto appears at the end of this data sheet.

NanoFree is a trademark of Texas Instruments.

UNLESS OTHERWISE NOTED this document contains PRODUCTION DATA information current as of publication date. Products conform to specifications per the terms of Texas Instruments standard warranty. Production processing does not necessarily include testing of all parameters.

Copyright © 2002–2009, Texas Instruments Incorporated

ORDERING INFORMATION

T_A	PACKAGE(1)(2)		ORDERABLE PART NUMBER	TOP-SIDE MARKING(3)
–40°C to 85°C	NanoFree™ WCSP (DSBGA) – YZP (Pb-free)	Reel of 3000	SN74AUC1G66YZPR	_ _ _U6_
	SON – DRY	Reel of 5000	SN74AUC1G66DRYR	PREVIEW
	SOT (SOT-23) – DBV	Reel of 3000	SN74AUC1G66DBVR	U66_
	SOT (SC-70) – DCK	Reel of 3000	SN74AUC1G66DCKR	U6_

(1) Package drawings, thermal data, and symbolization are available at www.ti.com/packaging.
(2) For the most current package and ordering information, see the Package Option Addendum at the end of this document, or see the TI website at www.ti.com.
(3) DBV/DCK/DRY: The actual top-side marking has one additional character that designates the assembly/test site.
YZP: The actual top-side marking has three preceding characters to denote year, month, and sequence code, and one following character to designate the assembly/test site.

FUNCTION TABLE

CONTROL INPUT (C)	SWITCH
L	OFF
H	ON

LOGIC DIAGRAM (POSITIVE LOGIC)

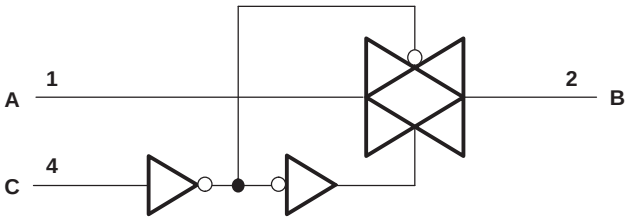

Absolute Maximum Ratings(1)

over operating free-air temperature range (unless otherwise noted)

			MIN	MAX	UNIT
V_{CC}	Supply voltage range		–0.5	3.6	V
V_I	Input voltage range(2)		–0.5	3.6	V
$V_{I/O}$	Switch I/O voltage range(2)(3)		–0.5	V_{CC} + 0.5	V
I_{IK}	Control input clamp current	V_I < 0		–50	mA
I_{IOK}	I/O port diode current	$V_{I/O}$ < 0 or $V_{I/O}$ > V_{CC}		±50	mA
I_T	On-state switch current	$V_{I/O}$ = 0 to V_{CC}		±50	mA
	Continuous current through V_{CC} or GND			±100	mA
θ_{JA}	Package thermal impedance(4)	DBV package		206	°C/W
		DCK package		252	
		DRY package		234	
		YZP package		123	
T_{stg}	Storage temperature range		–65	150	°C

(1) Stresses beyond those listed under "absolute maximum ratings" may cause permanent damage to the device. These are stress ratings only, and functional operation of the device at these or any other conditions beyond those indicated under "recommended operating conditions" is not implied. Exposure to absolute-maximum-rated conditions for extended periods may affect device reliability.
(2) All voltages are with respect to ground, unless otherwise specified.
(3) The input negative-voltage and output voltage ratings may be exceeded if the input and output current ratings are observed.
(4) The package thermal impedance is calculated in accordance with JESD 51-7.

Copyright © 2002–2009, Texas Instruments Incorporated

Recommended Operating Conditions(1)

			MIN	MAX	UNIT
V_{CC}	Supply voltage		0.8	2.7	V
V_{IH}	High-level input voltage	V_{CC} = 0.8 V	V_{CC}		V
		V_{CC} = 1.1 V to 1.95 V	0.65 × V_{CC}		
		V_{CC} = 2.3 V to 2.7 V	1.7		
V_{IL}	Low-level input voltage	V_{CC} = 0.8 V		0	V
		V_{CC} = 1.1 V to 1.95 V		0.35 × V_{CC}	
		V_{CC} = 2.3 V to 2.7 V		0.7	
$V_{I/O}$	I/O port voltage		0	V_{CC}	V
V_I	Control input voltage		0	3.6	V
Δt/Δv	Input transition rise or fall rate			20	ns/V
T_A	Operating free-air temperature		–40	85	°C

(1) All unused inputs of the device must be held at V_{CC} or GND to ensure proper device operation. Refer to the TI application report, *Implications of Slow or Floating CMOS Inputs*, literature number SCBA004.

Electrical Characteristics

over recommended operating free-air temperature range (unless otherwise noted)

PARAMETER		TEST CONDITIONS		V_{CC}	MIN	TYP(1)	MAX	UNIT
r_{on}	On-state switch resistance	V_I = V_{CC} or GND, V_C = V_{IH} (see Figure 1)	I_S = 4 mA	1.65 V		10	20	Ω
			I_S = 8 mA	2.3 V		9	15	
$r_{on(p)}$	Peak on resistance	V_I = V_{CC} to GND, V_C = V_{IH} (see Figure 1)	I_S = 4 mA	1.65 V		32	80	Ω
			I_S = 8 mA	2.3 V		15	20	
$I_{S(off)}$	Off-state switch leakage current	V_I = V_{CC} and V_O = GND, or V_I = GND and V_O = V_{CC}, V_C = V_{IL} (see Figure 2)		2.7 V			±1	μA
							±0.1(1)	
$I_{S(on)}$	On-state switch leakage current	V_I = V_{CC} or GND, V_C = V_{IH}, V_O = Open (see Figure 3)		2.7 V			±1	μA
							±0.1(1)	
I_I	Control input current	V_I = V_{CC} or GND		0 to 2.7 V			±5	μA
I_{CC}	Supply current	V_I = V_{CC} or GND,	I_O = 0	0.8 V to 2.7 V			10	μA
C_{ic}	Control input capacitance			2.5 V		2		pF
$C_{io(off)}$	Switch input/output capacitance			2.5 V		3.5		pF
$C_{io(on)}$	Switch input/output capacitance			2.5 V		7		pF

(1) All typical values are at T_A = 25°C.

Switching Characteristics

over recommended operating free-air temperature range, C_L = 15 pF (unless otherwise noted) (see Figure 4)

PARAMETER	FROM (INPUT)	TO (OUTPUT)	V_{CC} = 0.8 V	V_{CC} = 1.2 V ± 0.1 V		V_{CC} = 1.5 V ± 0.1 V		V_{CC} = 1.8 V ± 0.15 V			V_{CC} = 2.5 V ± 0.2 V		UNIT
			TYP	MIN	MAX	MIN	MAX	MIN	TYP	MAX	MIN	MAX	
t_{pd}(1)	A or B	B or A	0.9		0.3		0.2			0.2		0.1	ns
t_{en}	C	A or B	4.1	0.5	2.6	0.5	1.7	0.5	0.8	1.1	0.5	1	ns
t_{dis}	C	A or B	5	0.7	3.6	0.5	2.6	0.5	1.7	2.9	0.5	2.2	ns

(1) The propagation delay is the calculated RC time constant of the typical on-state resistance of the switch and the specified load capacitance, when driven by an ideal voltage source (zero output impedance).

Copyright © 2002–2009, Texas Instruments Incorporated

Switching Characteristics

over recommended operating free-air temperature range, C_L = 30 pF (unless otherwise noted) (see Figure 4)

PARAMETER	FROM (INPUT)	TO (OUTPUT)	V_{CC} = 1.8 V ± 0.15 V			V_{CC} = 2.5 V ± 0.2 V		UNIT
			MIN	TYP	MAX	MIN	MAX	
t_{pd} (1)	A or B	B or A			0.3		0.3	ns
t_{en}	C	A or B	0.5	1.4	2.3	0.8	1.4	ns
t_{dis}	C	A or B	0.5	1.7	2.9	0.5	1.5	ns

(1) The propagation delay is the calculated RC time constant of the typical on-state resistance of the switch and the specified load capacitance, when driven by an ideal voltage source (zero output impedance).

Copyright © 2002–2009, Texas Instruments Incorporated

Analog Switch Characteristics

T_A = 25°C

PARAMETER	FROM (INPUT)	TO (OUTPUT)	TEST CONDITIONS	V_{CC}	TYP	UNIT
Frequency response[1] (switch ON)	A or B	B or A	C_L = 50 pF, R_L = 600 Ω, f_{in} = sine wave (see Figure 5)	0.8 V	60	MHz
				1.1 V	60	
				1.4 V	80	
				1.65 V	120	
				2.3 V	170	
			C_L = 5 pF, R_L = 50 Ω, f_{in} = sine wave (see Figure 5)	0.8 V	>500	
				1.1 V	>500	
				1.4 V	>500	
				1.65 V	>500	
				2.3 V	>500	
Crosstalk (control input to signal output)	C	A or B	C_L = 50 pF, R_L = 600 Ω, f_{in} = 1 MHz (square wave) (see Figure 6)	0.8 V	9	mV
				1.1 V	14	
				1.4 V	15	
				1.65 V	16	
				2.3 V	20	
Feedthrough attenuation[2] (switch OFF)	A or B	B or A	C_L = 50 pF, R_L = 600 Ω, f_{in} = 1 MHz (sine wave) (see Figure 7)	0.8 V	–60	dB
				1.1 V	–60	
				1.4 V	–60	
				1.65 V	–60	
				2.3 V	–60	
			C_L = 5 pF, R_L = 50 Ω, f_{in} = 1 MHz (sine wave) (see Figure 7)	0.8 V	–55	
				1.1 V	–55	
				1.4 V	–55	
				1.65 V	–55	
				2.3 V	–55	
Sine-wave distortion	A or B	B or A	C_L = 50 pF, R_L = 10 kΩ, f_{in} = 1 kHz (sine wave) (see Figure 8)	0.8 V	7.5	%
				1.1 V	0.16	
				1.4 V	0.04	
				1.65 V	0.03	
				2.3 V	0.02	
	A or B	B or A	C_L = 50 pF, R_L = 10 kΩ, f_{in} = 10 kHz (sine wave) (see Figure 8)	0.8 V	4.2	
				1.1 V	0.2	
				1.4 V	0.03	
				1.65 V	0.02	
				2.3 V	0.02	

(1) Adjust f_{in} voltage to obtain 0 dBm at output. Increase f_{in} frequency until dB meter reads –3 dB.
(2) Adjust f_{in} voltage to obtain 0 dBm at input.

Operating Characteristics

T_A = 25°C

PARAMETER		TEST CONDITIONS	V_{CC} = 0.8 V	V_{CC} = 1.2 V	V_{CC} = 1.5 V	V_{CC} = 1.8 V	V_{CC} = 2.5 V	UNIT
			TYP	TYP	TYP	TYP	TYP	
C_{pd}	Power dissipation capacitance	f = 10 MHz	3	3	3	3	3	pF

Copyright © 2002–2009, Texas Instruments Incorporated

PARAMETER MEASUREMENT INFORMATION

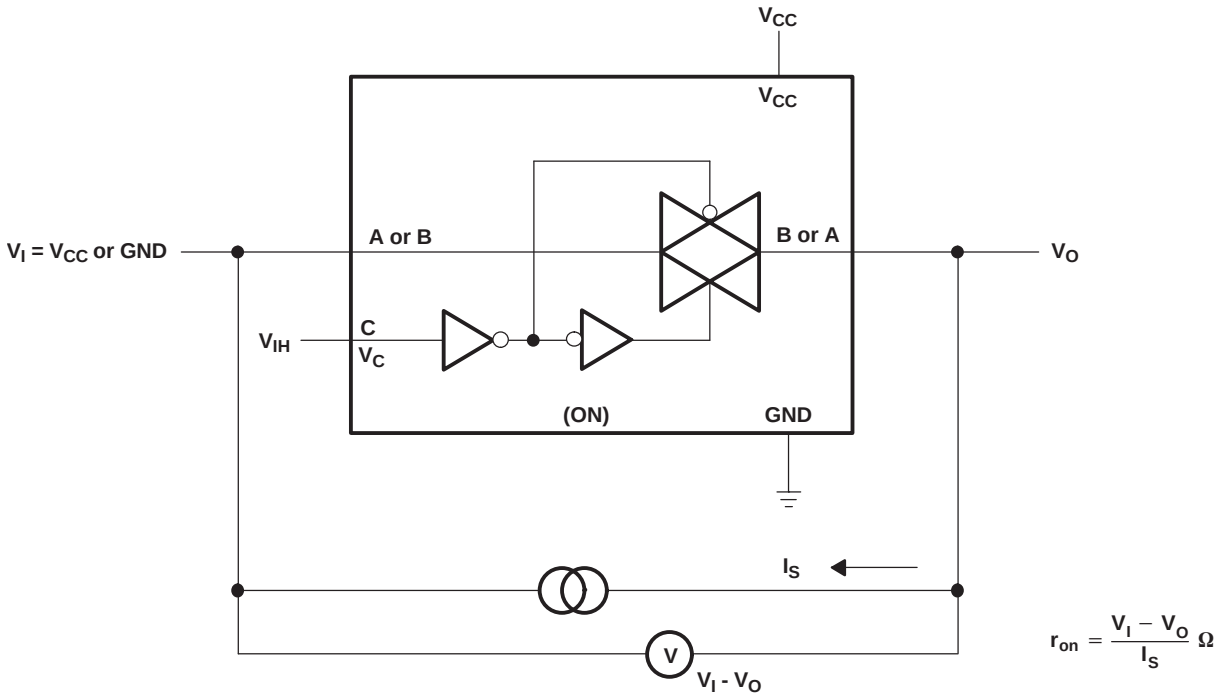

Figure 1. On-State Resistance Test Circuit

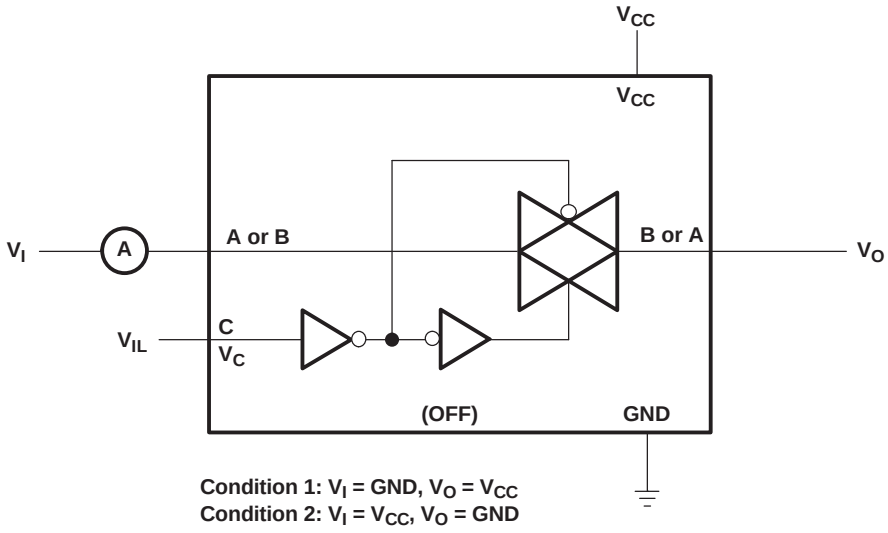

Figure 2. Off-State Switch Leakage-Current Test Circuit

Copyright © 2002–2009, Texas Instruments Incorporated

PARAMETER MEASUREMENT INFORMATION (Continued)

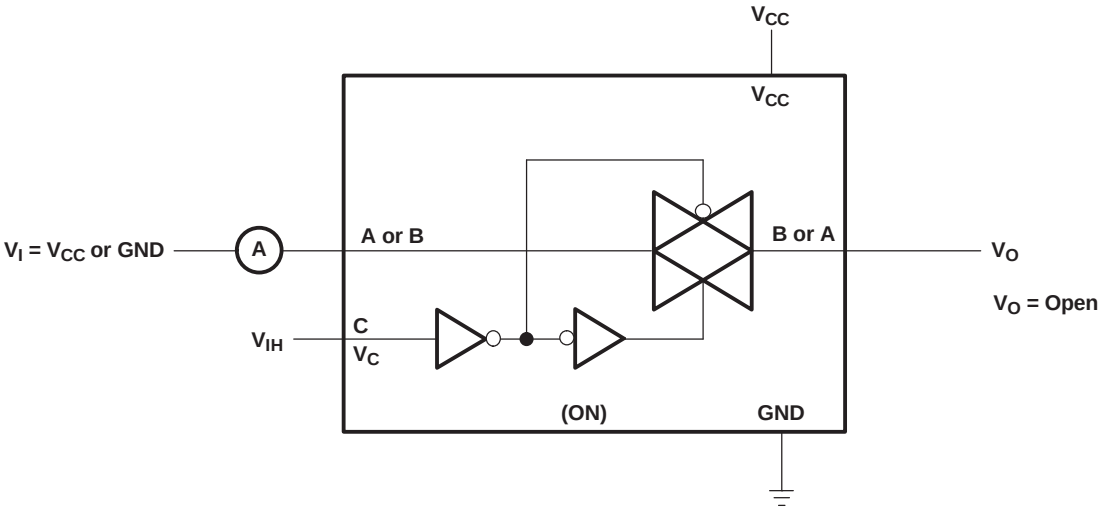

Figure 3. On-State Leakage-Current Test Circuit

PARAMETER MEASUREMENT INFORMATION (Continued)

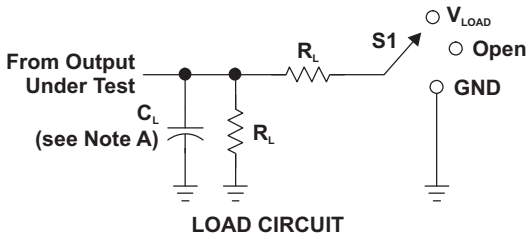

LOAD CIRCUIT

TEST	S1
t_{PLH}/t_{PHL}	Open
t_{PLZ}/t_{PZL}	V_{LOAD}
t_{PHZ}/t_{PZH}	GND

V_{CC}	INPUTS		V_M	V_{LOAD}	C_L	R_L	V_Δ
	V_I	t_r/t_f					
0.8 V	V_{CC}	≤2 ns	$V_{CC}/2$	2 × V_{CC}	15 pF	2 kΩ	0.1 V
1.2 V ± 0.1 V	V_{CC}	≤2 ns	$V_{CC}/2$	2 × V_{CC}	15 pF	2 kΩ	0.1 V
1.5 V ± 0.1 V	V_{CC}	≤2 ns	$V_{CC}/2$	2 × V_{CC}	15 pF	2 kΩ	0.1 V
1.8 V ± 0.15 V	V_{CC}	≤2 ns	$V_{CC}/2$	2 × V_{CC}	15 pF	2 kΩ	0.15 V
2.5 V ± 0.2 V	V_{CC}	≤2 ns	$V_{CC}/2$	2 × V_{CC}	15 pF	2 kΩ	0.15 V
1.8 V ± 0.15 V	V_{CC}	≤2 ns	$V_{CC}/2$	2 × V_{CC}	30 pF	1 kΩ	0.15 V
2.5 V ± 0.2 V	V_{CC}	≤2 ns	$V_{CC}/2$	2 × V_{CC}	30 pF	500 Ω	0.15 V

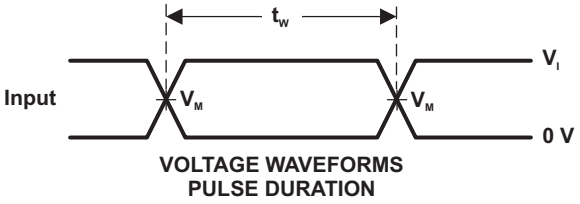

VOLTAGE WAVEFORMS
PULSE DURATION

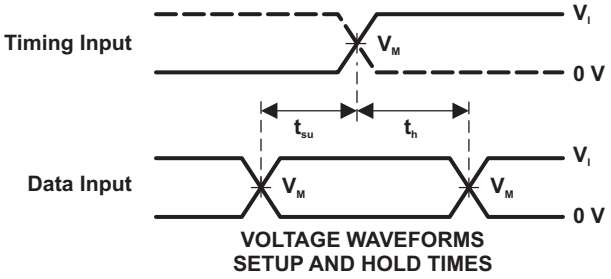

VOLTAGE WAVEFORMS
SETUP AND HOLD TIMES

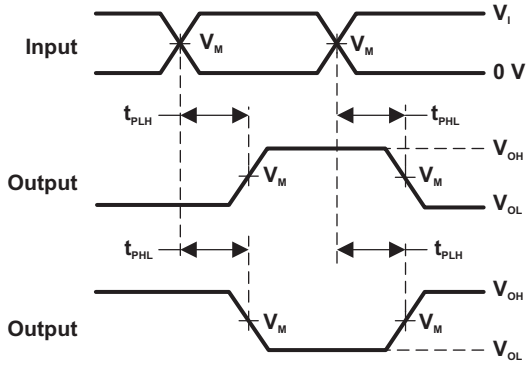

VOLTAGE WAVEFORMS
PROPAGATION DELAY TIMES
INVERTING AND NONINVERTING OUTPUTS

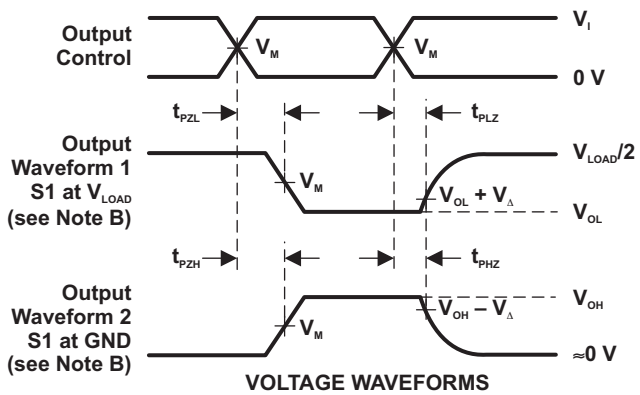

VOLTAGE WAVEFORMS
ENABLE AND DISABLE TIMES
LOW- AND HIGH-LEVEL ENABLING

NOTES: A. C_L includes probe and jig capacitance.
B. Waveform 1 is for an output with internal conditions such that the output is low, except when disabled by the output control. Waveform 2 is for an output with internal conditions such that the output is high, except when disabled by the output control.
C. All input pulses are supplied by generators having the following characteristics: PRR ≤ 10 MHz, Z_O = 50 Ω, Slew rate ≥ 1 V/ns.
D. The outputs are measured one at a time, with one transition per measurement.
E. t_{PLZ} and t_{PHZ} are the same as t_{dis}.
F. t_{PZL} and t_{PZH} are the same as t_{en}.
G. t_{PLH} and t_{PHL} are the same as t_{pd}.

Figure 4. Load Circuit and Voltage Waveforms

Copyright © 2002–2009, Texas Instruments Incorporated

PARAMETER MEASUREMENT INFORMATION (Continued)

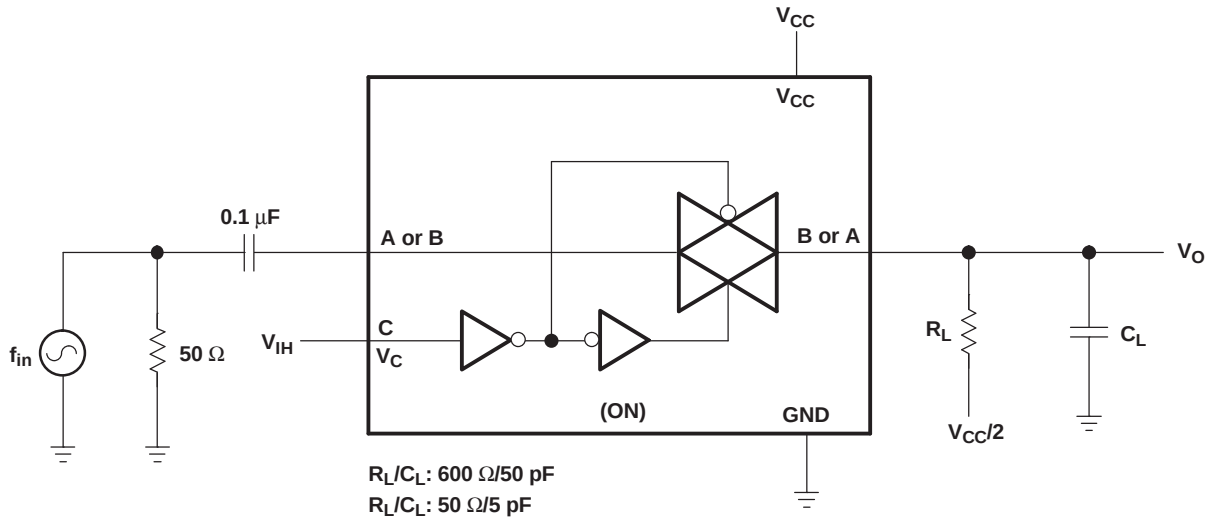

Figure 5. Frequency Response (Switch ON)

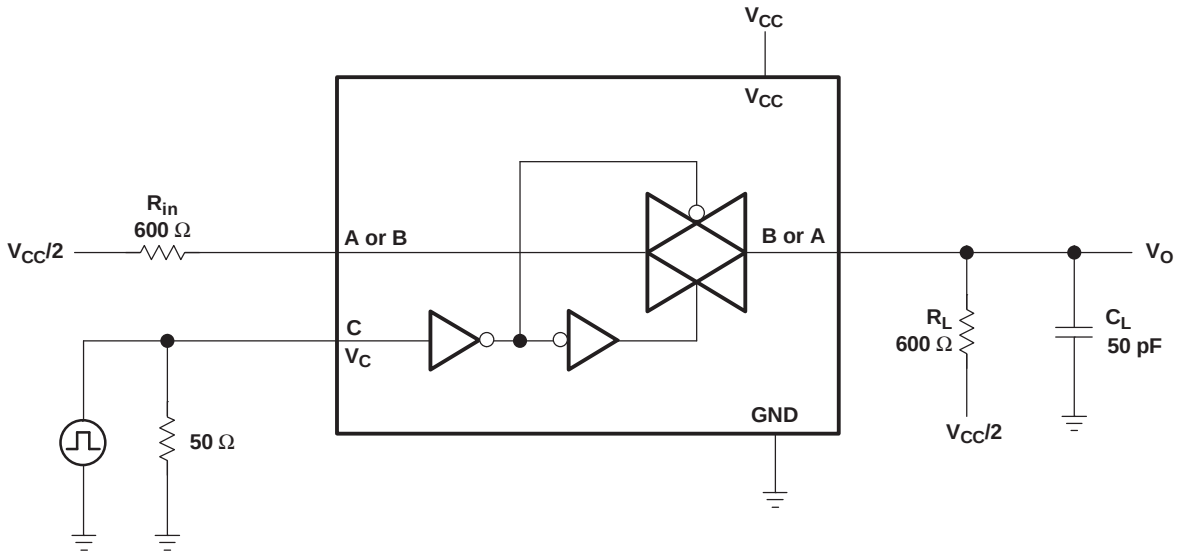

Figure 6. Crosstalk (Control Input – Switch Output)

Copyright © 2002–2009, Texas Instruments Incorporated

PARAMETER MEASUREMENT INFORMATION (Continued)

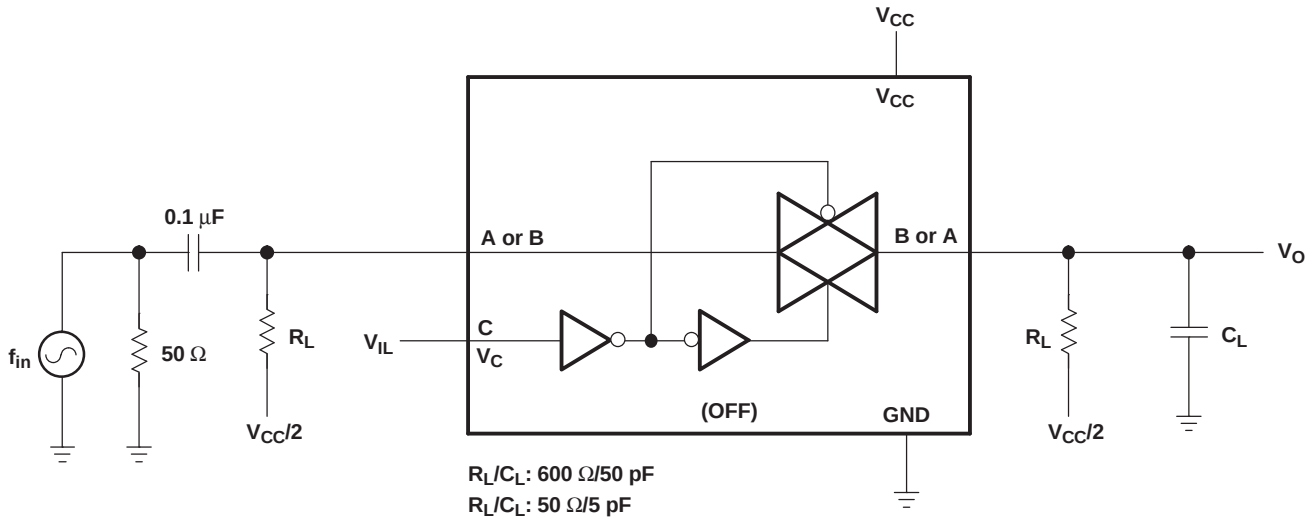

Figure 7. Feedthrough (Switch OFF)

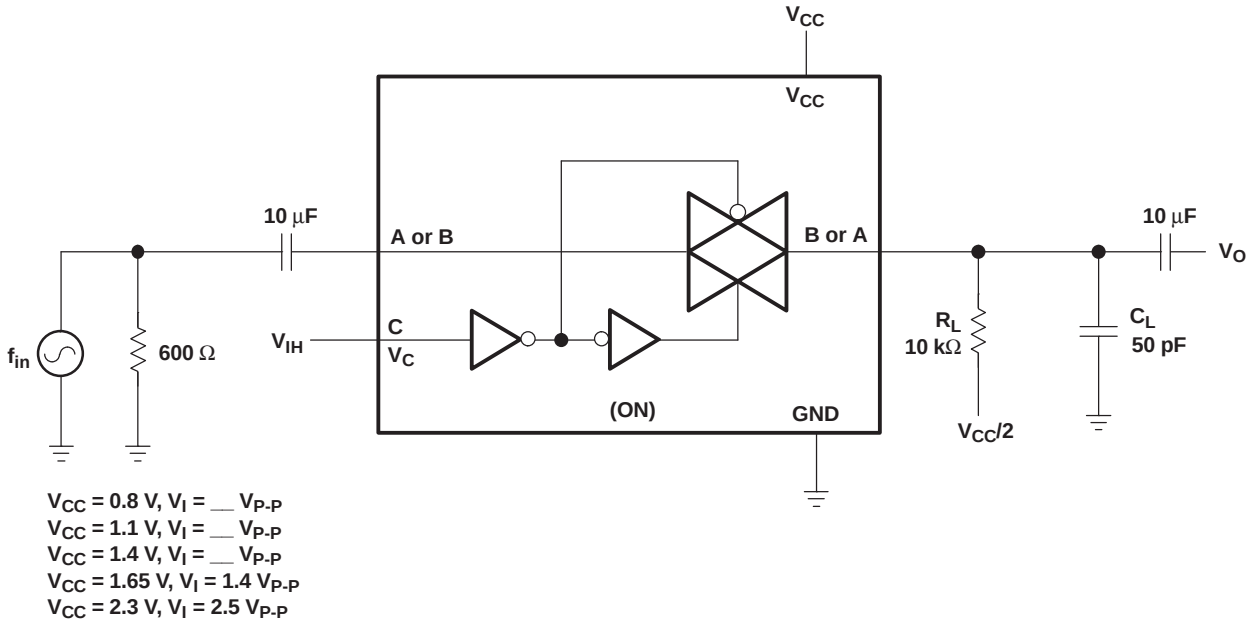

Figure 8. Sine-Wave Distortion

Copyright © 2002–2009, Texas Instruments Incorporated

PACKAGING INFORMATION

Orderable part number	Status (1)	Material type (2)	Package | Pins	Package qty | Carrier	RoHS (3)	Lead finish/ Ball material (4)	MSL rating/ Peak reflow (5)	Op temp (°C)	Part marking (6)
SN74AUC1G66DBVR	Active	Production	SOT-23 (DBV) | 5	3000 | LARGE T&R	Yes	NIPDAU | SN	Level-1-260C-UNLIM	-40 to 85	(U66F, U66R)
SN74AUC1G66DBVR.B	Active	Production	SOT-23 (DBV) | 5	3000 | LARGE T&R	Yes	NIPDAU	Level-1-260C-UNLIM	-40 to 85	(U66F, U66R)
SN74AUC1G66DBVRG4.B	Active	Production	SOT-23 (DBV) | 5	3000 | LARGE T&R	Yes	NIPDAU	Level-1-260C-UNLIM	-40 to 85	U66F
SN74AUC1G66DCKR	Active	Production	SC70 (DCK) | 5	3000 | LARGE T&R	Yes	NIPDAU	Level-1-260C-UNLIM	-40 to 85	(U65, U6F, U6R)
SN74AUC1G66DCKR.B	Active	Production	SC70 (DCK) | 5	3000 | LARGE T&R	Yes	NIPDAU	Level-1-260C-UNLIM	-40 to 85	(U65, U6F, U6R)
SN74AUC1G66YZPR	Active	Production	DSBGA (YZP) | 5	3000 | LARGE T&R	Yes	SNAGCU	Level-1-260C-UNLIM	-40 to 85	U6N
SN74AUC1G66YZPR.B	Active	Production	DSBGA (YZP) | 5	3000 | LARGE T&R	Yes	SNAGCU	Level-1-260C-UNLIM	-40 to 85	U6N

(1) **Status:** For more details on status, see our product life cycle.

(2) **Material type:** When designated, preproduction parts are prototypes/experimental devices, and are not yet approved or released for full production. Testing and final process, including without limitation quality assurance, reliability performance testing, and/or process qualification, may not yet be complete, and this item is subject to further changes or possible discontinuation. If available for ordering, purchases will be subject to an additional waiver at checkout, and are intended for early internal evaluation purposes only. These items are sold without warranties of any kind.

(3) **RoHS values:** Yes, No, RoHS Exempt. See the TI RoHS Statement for additional information and value definition.

(4) **Lead finish/Ball material:** Parts may have multiple material finish options. Finish options are separated by a vertical ruled line. Lead finish/Ball material values may wrap to two lines if the finish value exceeds the maximum column width.

(5) **MSL rating/Peak reflow:** The moisture sensitivity level ratings and peak solder (reflow) temperatures. In the event that a part has multiple moisture sensitivity ratings, only the lowest level per JEDEC standards is shown. Refer to the shipping label for the actual reflow temperature that will be used to mount the part to the printed circuit board.

(6) **Part marking:** There may be an additional marking, which relates to the logo, the lot trace code information, or the environmental category of the part.

Multiple part markings will be inside parentheses. Only one part marking contained in parentheses and separated by a "~" will appear on a part. If a line is indented then it is a continuation of the previous line and the two combined represent the entire part marking for that device.

Important Information and Disclaimer: The information provided on this page represents TI's knowledge and belief as of the date that it is provided. TI bases its knowledge and belief on information provided by third parties, and makes no representation or warranty as to the accuracy of such information. Efforts are underway to better integrate information from third parties. TI has taken and continues to take reasonable steps to provide representative and accurate information but may not have conducted destructive testing or chemical analysis on incoming materials and chemicals. TI and TI suppliers consider certain information to be proprietary, and thus CAS numbers and other limited information may not be available for release.

In no event shall TI's liability arising out of such information exceed the total purchase price of the TI part(s) at issue in this document sold by TI to Customer on an annual basis.

TAPE AND REEL INFORMATION

REEL DIMENSIONS

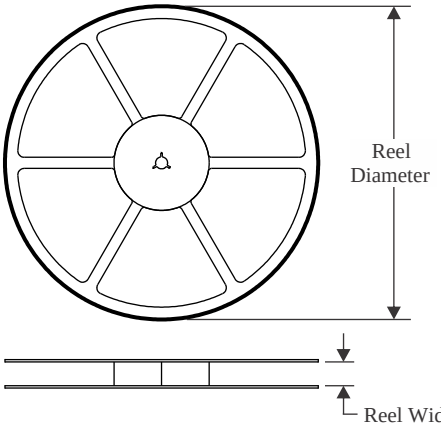

TAPE DIMENSIONS

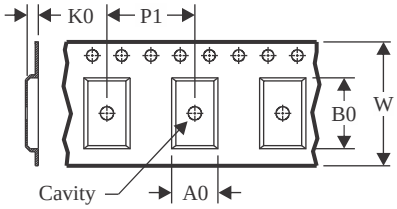

A0	Dimension designed to accommodate the component width
B0	Dimension designed to accommodate the component length
K0	Dimension designed to accommodate the component thickness
W	Overall width of the carrier tape
P1	Pitch between successive cavity centers

QUADRANT ASSIGNMENTS FOR PIN 1 ORIENTATION IN TAPE

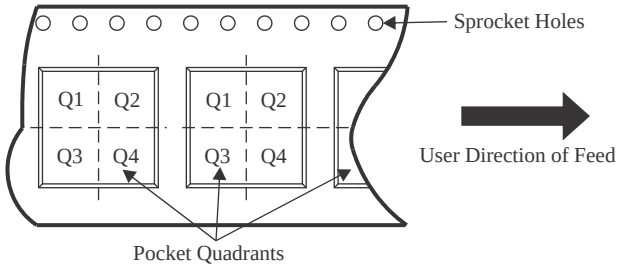

*All dimensions are nominal

Device	Package Type	Package Drawing	Pins	SPQ	Reel Diameter (mm)	Reel Width W1 (mm)	A0 (mm)	B0 (mm)	K0 (mm)	P1 (mm)	W (mm)	Pin1 Quadrant
SN74AUC1G66DBVR	SOT-23	DBV	5	3000	180.0	8.4	3.23	3.17	1.37	4.0	8.0	Q3
SN74AUC1G66DBVR	SOT-23	DBV	5	3000	178.0	9.0	3.23	3.17	1.37	4.0	8.0	Q3
SN74AUC1G66DCKR	SC70	DCK	5	3000	178.0	9.2	2.4	2.4	1.22	4.0	8.0	Q3
SN74AUC1G66DCKR	SC70	DCK	5	3000	180.0	8.4	2.47	2.3	1.25	4.0	8.0	Q3
SN74AUC1G66DCKR	SC70	DCK	5	3000	178.0	9.0	2.4	2.5	1.2	4.0	8.0	Q3
SN74AUC1G66YZPR	DSBGA	YZP	5	3000	178.0	9.2	1.02	1.52	0.63	4.0	8.0	Q1

TAPE AND REEL BOX DIMENSIONS

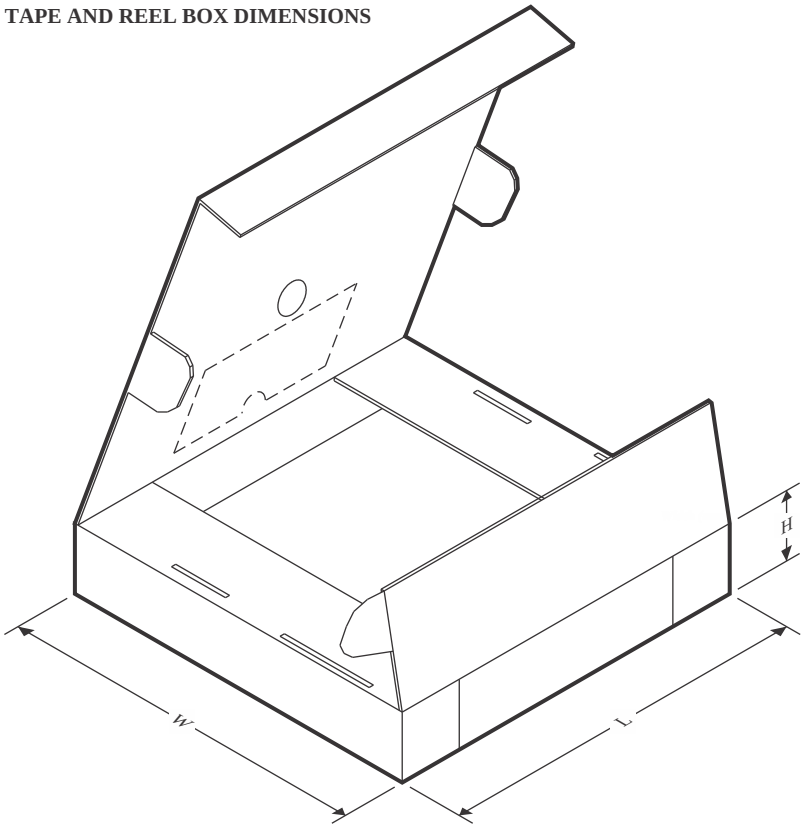

*All dimensions are nominal

Device	Package Type	Package Drawing	Pins	SPQ	Length (mm)	Width (mm)	Height (mm)
SN74AUC1G66DBVR	SOT-23	DBV	5	3000	202.0	201.0	28.0
SN74AUC1G66DBVR	SOT-23	DBV	5	3000	180.0	180.0	18.0
SN74AUC1G66DCKR	SC70	DCK	5	3000	180.0	180.0	18.0
SN74AUC1G66DCKR	SC70	DCK	5	3000	202.0	201.0	28.0
SN74AUC1G66DCKR	SC70	DCK	5	3000	180.0	180.0	18.0
SN74AUC1G66YZPR	DSBGA	YZP	5	3000	220.0	220.0	35.0

PACKAGE OUTLINE

DCK0005A

SOT - 1.1 max height

SMALL OUTLINE TRANSISTOR

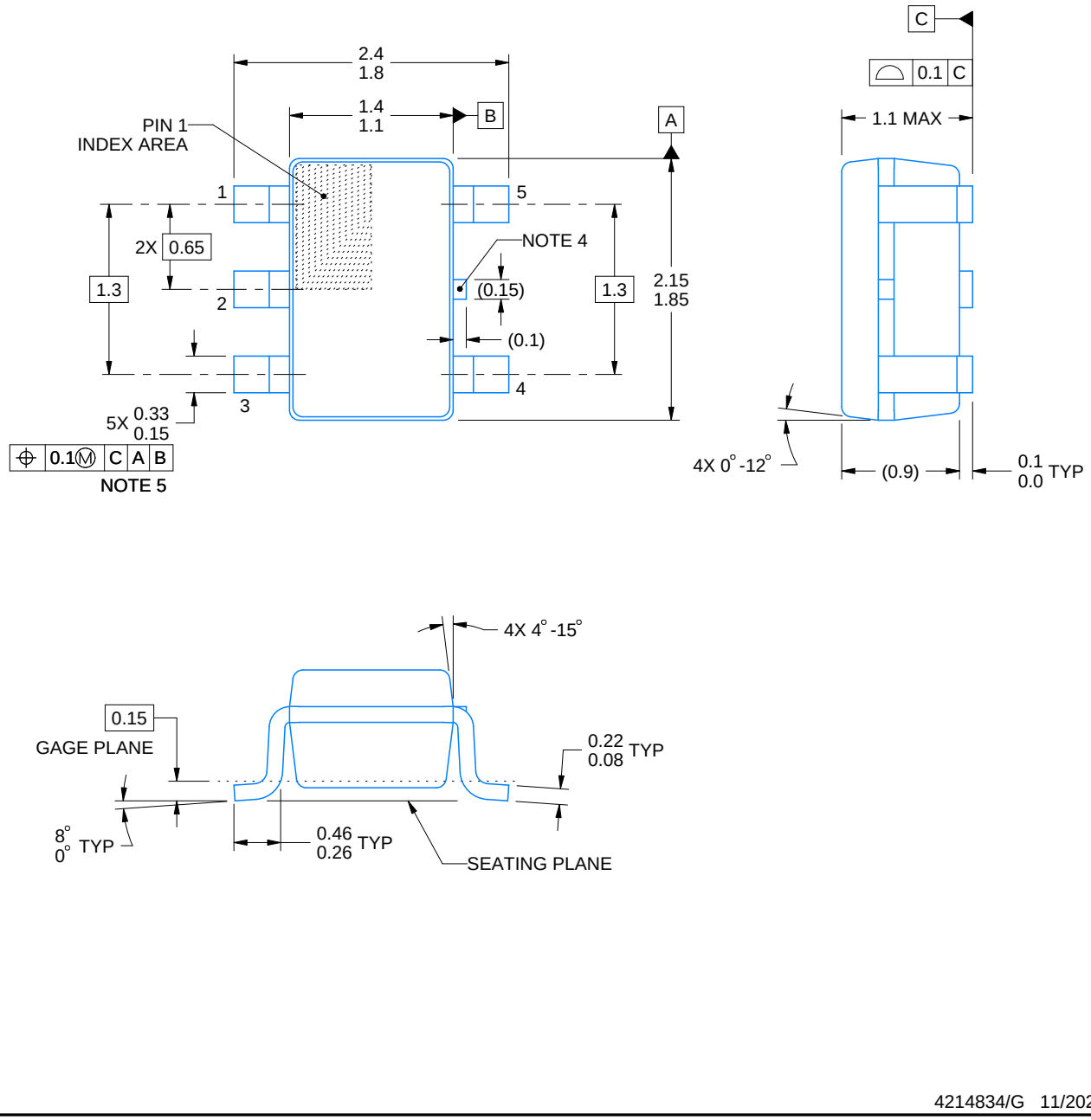

4214834/G 11/2024

NOTES:

1. All linear dimensions are in millimeters. Any dimensions in parenthesis are for reference only. Dimensioning and tolerancing per ASME Y14.5M.
2. This drawing is subject to change without notice.
3. Refernce JEDEC MO-203.
4. Support pin may differ or may not be present.
5. Lead width does not comply with JEDEC.
6. Body dimensions do not include mold flash, protrusions, or gate burrs. Mold flash, protrusions, or gate burrs shall not exceed 0.25mm per side

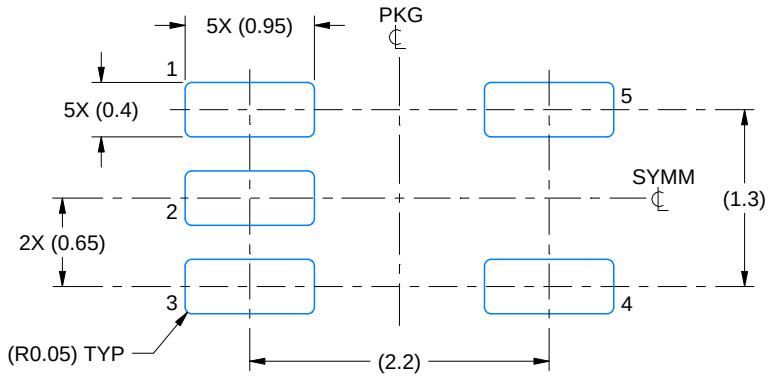

LAND PATTERN EXAMPLE
EXPOSED METAL SHOWN
SCALE:18X

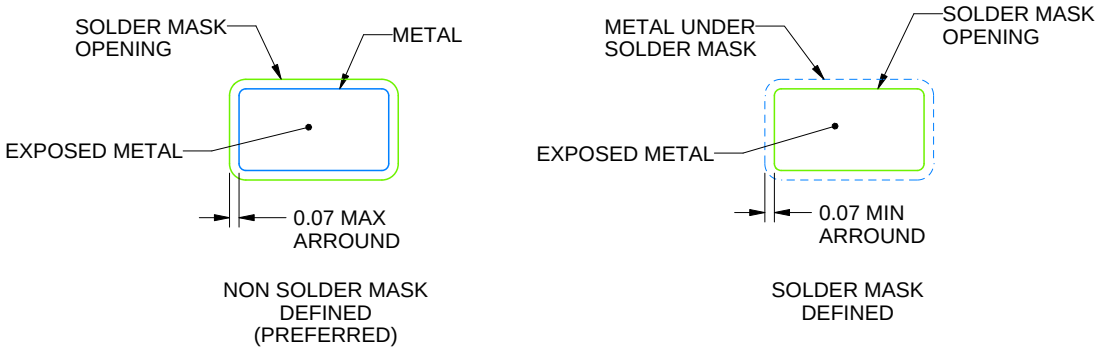

SOLDER MASK DETAILS

4214834/G 11/2024

NOTES: (continued)

7. Publication IPC-7351 may have alternate designs.
8. Solder mask tolerances between and around signal pads can vary based on board fabrication site.

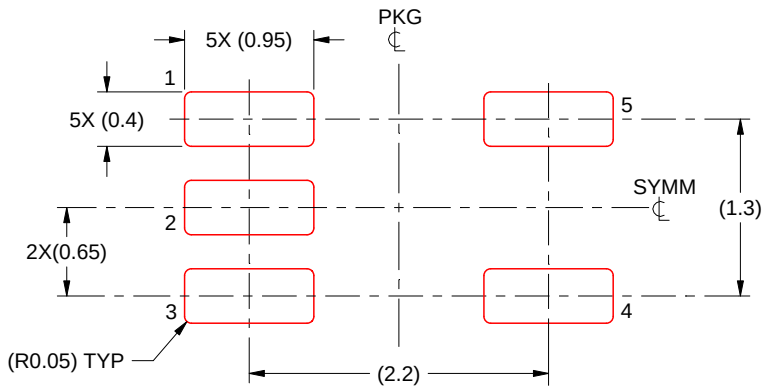

SOLDER PASTE EXAMPLE
BASED ON 0.125 THICK STENCIL
SCALE:18X

4214834/G 11/2024

NOTES: (continued)

9. Laser cutting apertures with trapezoidal walls and rounded corners may offer better paste release. IPC-7525 may have alternate design recommendations.
10. Board assembly site may have different recommendations for stencil design.

PACKAGE OUTLINE

DBV0005A

SOT-23 - 1.45 mm max height

SMALL OUTLINE TRANSISTOR

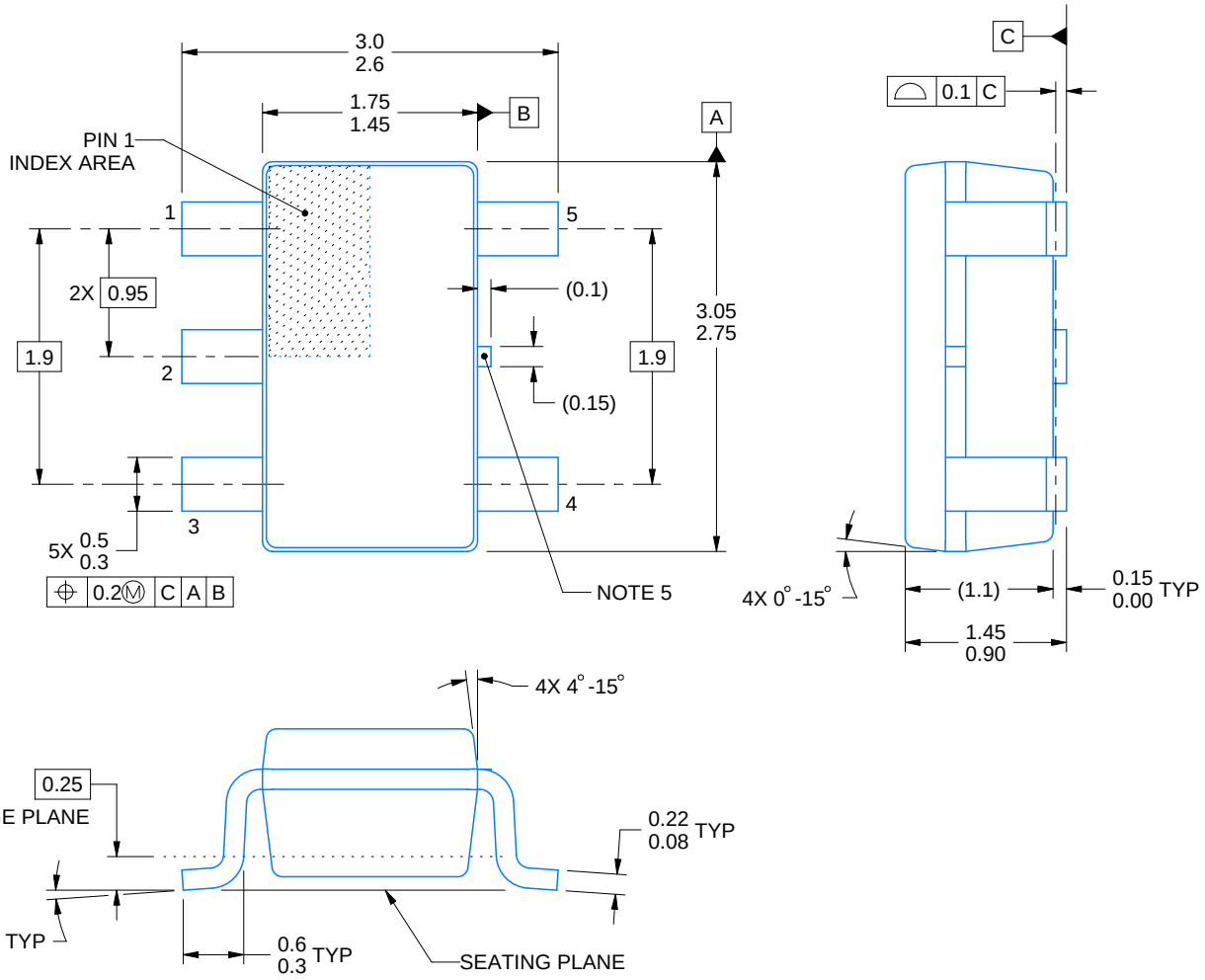

4214839/K 08/2024

NOTES:

1. All linear dimensions are in millimeters. Any dimensions in parenthesis are for reference only. Dimensioning and tolerancing per ASME Y14.5M.
2. This drawing is subject to change without notice.
3. Refernce JEDEC MO-178.
4. Body dimensions do not include mold flash, protrusions, or gate burrs. Mold flash, protrusions, or gate burrs shall not exceed 0.25 mm per side.
5. Support pin may differ or may not be present.

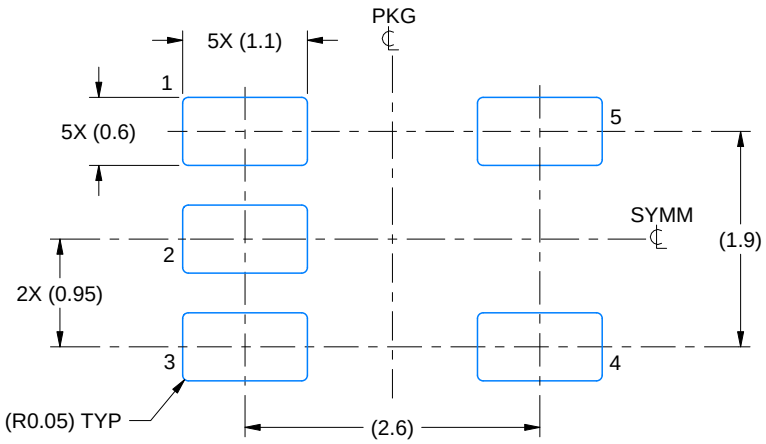

LAND PATTERN EXAMPLE
EXPOSED METAL SHOWN
SCALE:15X

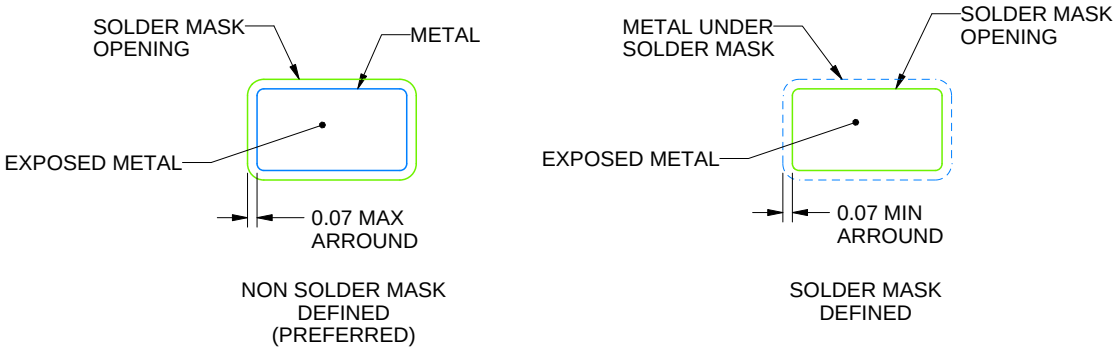

SOLDER MASK DETAILS

4214839/K 08/2024

NOTES: (continued)

6. Publication IPC-7351 may have alternate designs.
7. Solder mask tolerances between and around signal pads can vary based on board fabrication site.

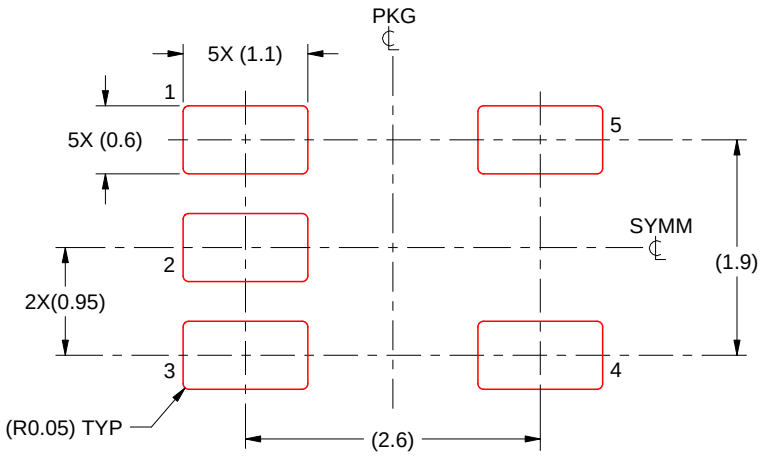

SOLDER PASTE EXAMPLE
BASED ON 0.125 mm THICK STENCIL
SCALE:15X

4214839/K 08/2024

NOTES: (continued)

8. Laser cutting apertures with trapezoidal walls and rounded corners may offer better paste release. IPC-7525 may have alternate design recommendations.
9. Board assembly site may have different recommendations for stencil design.

PACKAGE OUTLINE

YZP0005

DSBGA - 0.5 mm max height

DIE SIZE BALL GRID ARRAY

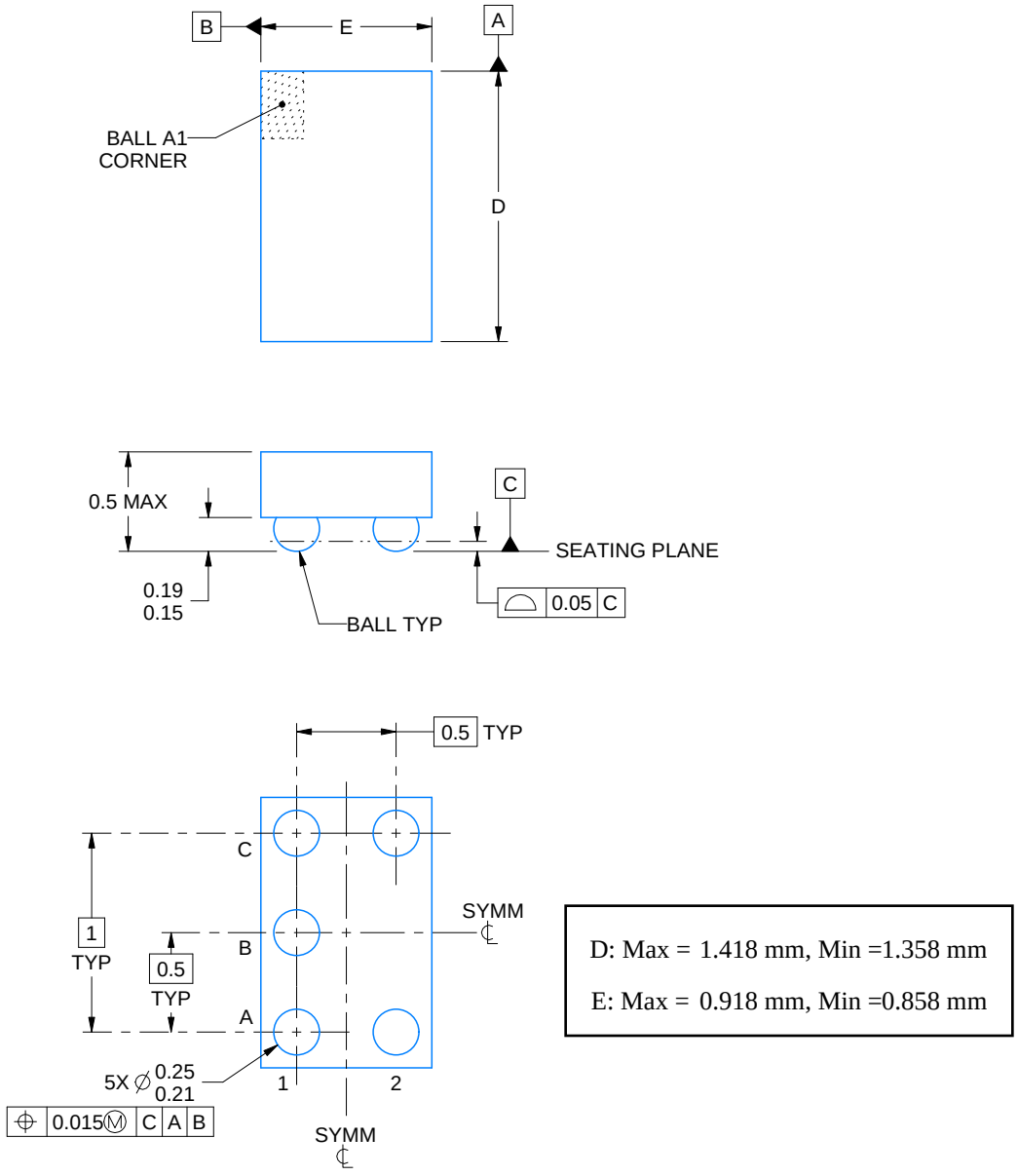

D: Max = 1.418 mm, Min =1.358 mm

E: Max = 0.918 mm, Min =0.858 mm

4219492/A 05/2017

NOTES:

1. All linear dimensions are in millimeters. Any dimensions in parenthesis are for reference only. Dimensioning and tolerancing per ASME Y14.5M.
2. This drawing is subject to change without notice.

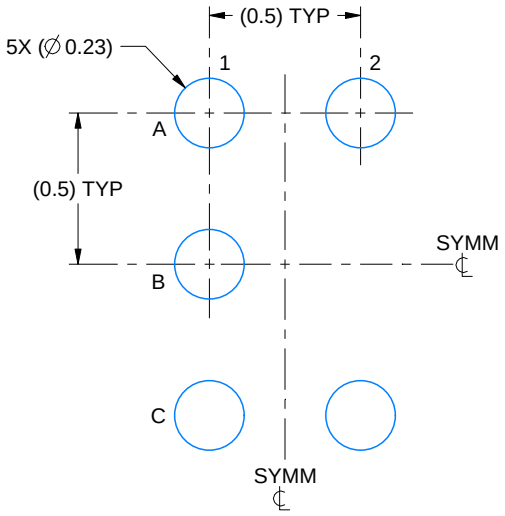

LAND PATTERN EXAMPLE
SCALE:40X

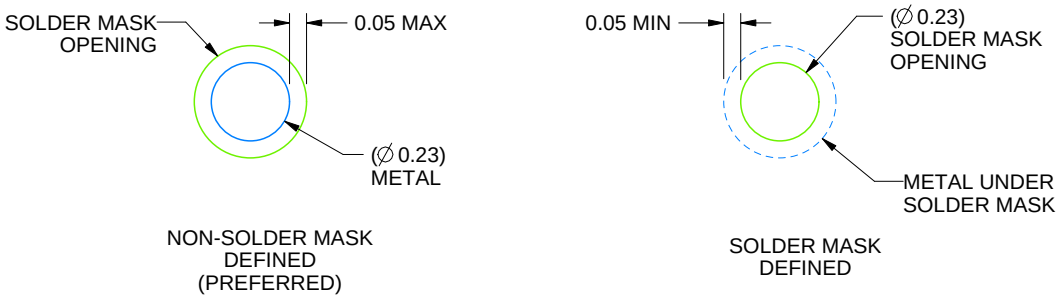

SOLDER MASK DETAILS
NOT TO SCALE

4219492/A 05/2017

NOTES: (continued)

3. Final dimensions may vary due to manufacturing tolerance considerations and also routing constraints. For more information, see Texas Instruments literature number SNVA009 (www.ti.com/lit/snva009).

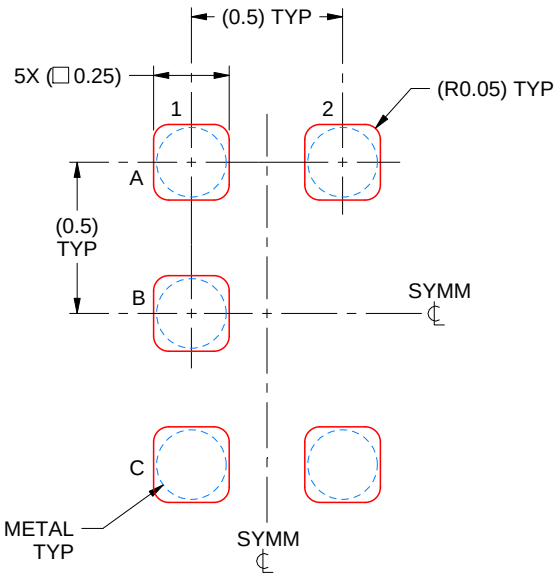

SOLDER PASTE EXAMPLE
BASED ON 0.1 mm THICK STENCIL
SCALE:40X

4219492/A 05/2017

NOTES: (continued)

4. Laser cutting apertures with trapezoidal walls and rounded corners may offer better paste release.

IMPORTANT NOTICE AND DISCLAIMER

TI PROVIDES TECHNICAL AND RELIABILITY DATA (INCLUDING DATASHEETS), DESIGN RESOURCES (INCLUDING REFERENCE DESIGNS), APPLICATION OR OTHER DESIGN ADVICE, WEB TOOLS, SAFETY INFORMATION, AND OTHER RESOURCES “AS IS” AND WITH ALL FAULTS, AND DISCLAIMS ALL WARRANTIES, EXPRESS AND IMPLIED, INCLUDING WITHOUT LIMITATION ANY IMPLIED WARRANTIES OF MERCHANTABILITY, FITNESS FOR A PARTICULAR PURPOSE OR NON-INFRINGEMENT OF THIRD PARTY INTELLECTUAL PROPERTY RIGHTS.

These resources are intended for skilled developers designing with TI products. You are solely responsible for (1) selecting the appropriate TI products for your application, (2) designing, validating and testing your application, and (3) ensuring your application meets applicable standards, and any other safety, security, regulatory or other requirements.

These resources are subject to change without notice. TI grants you permission to use these resources only for development of an application that uses the TI products described in the resource. Other reproduction and display of these resources is prohibited. No license is granted to any other TI intellectual property right or to any third party intellectual property right. TI disclaims responsibility for, and you fully indemnify TI and its representatives against any claims, damages, costs, losses, and liabilities arising out of your use of these resources.

TI’s products are provided subject to TI’s Terms of Sale, TI’s General Quality Guidelines, or other applicable terms available either on ti.com or provided in conjunction with such TI products. TI’s provision of these resources does not expand or otherwise alter TI’s applicable warranties or warranty disclaimers for TI products. Unless TI explicitly designates a product as custom or customer-specified, TI products are standard, catalog, general purpose devices.

TI objects to and rejects any additional or different terms you may propose.

Copyright © 2026, Texas Instruments Incorporated

Last updated 10/2025