SN74CBTLV3126 Low-Voltage Quadruple FET Bus Switch

1 Features

- Standard 126-type pinout
- 5Ω switch connection between two ports
- Rail-to-rail switching on data I/O ports
- I_{off} supports partial-power-down mode operation
- Latch-up performance exceeds 100mA per JESD 78, Class II

2 Applications

- Datacenter and enterprise computing
- Broadband fixed line access
- Building automation
- Wired networking
- Motor drives

3 Description

The SN74CBTLV3126 quadruple FET bus switch features independent line switches. Each switch is disabled when the associated output-enable (OE) input is low.

This device is fully specified for partial-power-down applications using I_{off}. The I_{off} feature verifies that damaging current does not backflow through the device when powered down. The SN74CBTLV3126 device has isolation during power off.

To verify the high-impedance state during power up or power down, tie OE to GND through a pull down resistor; the minimum value of the resistor is determined by the current-sinking capability of the driver.

Package Information

PART NUMBER	PACKAGE(1)	PACKAGE SIZE(2)
SN74CBTLV3126	SOIC (D, 14)	8.65mm × 3.91mm
	TVSOP (DGV, 14)	3.60mm × 4.40mm
	TSSOP (PW, 14)	5.00mm × 4.40mm
	VQFN (RGY, 14)	4.00mm × 3.50mm
	SSOP (DBQ, 16)	4.90mm × 3.90mm
	SOT (DYY,14)	4.20mm × 2.00mm
	WQFN (BQA,14)	3.00mm × 2.50mm

(1) For all available packages, see the package option addendum at the end of the data sheet.
(2) The package size (length × width) is a nominal value and includes pins, where applicable.

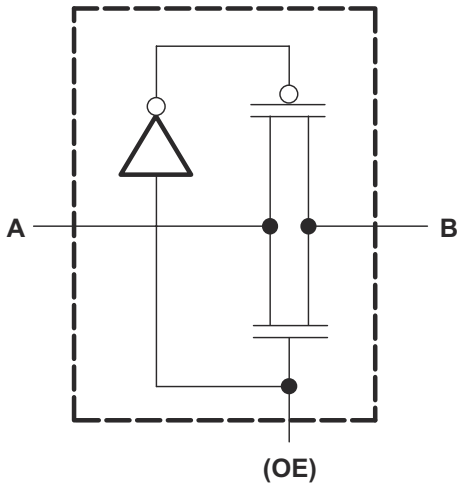

Simplified Schematic, Each FET Switch

An IMPORTANT NOTICE at the end of this data sheet addresses availability, warranty, changes, use in safety-critical applications, intellectual property matters and other important disclaimers. PRODUCTION DATA.

Table of Contents

1 Features....1
2 Applications....1
3 Description....1
4 Pin Configuration and Functions....3
5 Specifications....5
5.1 Absolute Maximum Ratings....5
5.2 ESD Ratings....5
5.3 Recommended Operating Conditions....5
5.4 Thermal Information....6
5.5 Electrical Characteristics - D, DGV, DBQ, PW, RGY....6
5.6 Electrical Characteristics - DYY and BQA....7
5.7 Switching Characteristics - D, DGV, DBQ, PW, RGY....7
5.8 Switching Characteristics - DYY and BQA....7
5.9 Typical Characteristics....8
6 Parameter Measurement Information....9
7 Detailed Description....10
7.1 Overview....10
7.2 Functional Block Diagram....10
7.3 Feature Description....10
7.4 Device Functional Modes....11
8 Application and Implementation....12
8.1 Application Information....12
8.2 Typical Application....12
8.3 Power Supply Recommendations....13
8.4 Layout....13
9 Device and Documentation Support....15
9.1 Receiving Notification of Documentation Updates....15
9.2 Support Resources....15
9.3 Trademarks....15
9.4 Electrostatic Discharge Caution....15
9.5 Glossary....15
10 Revision History....15
11 Mechanical, Packaging, and Orderable Information....15

Copyright © 2026 Texas Instruments Incorporated

4 Pin Configuration and Functions

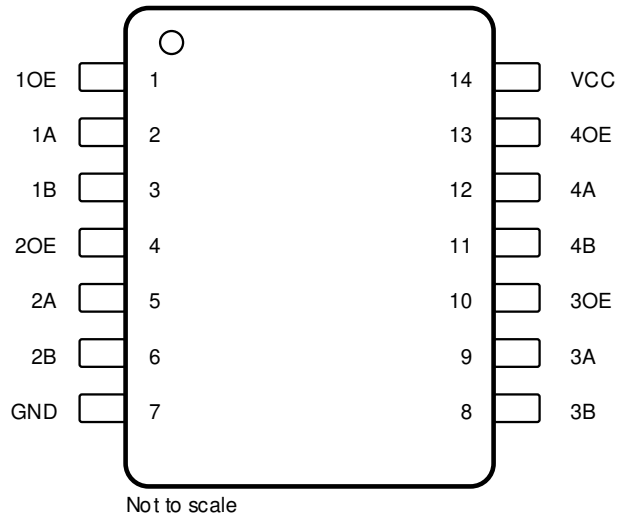

Figure 4-1. D, DGV, PW and DYY Package, 14 Pin SOIC, TVSOP, TSSOP and SOT (Top View)

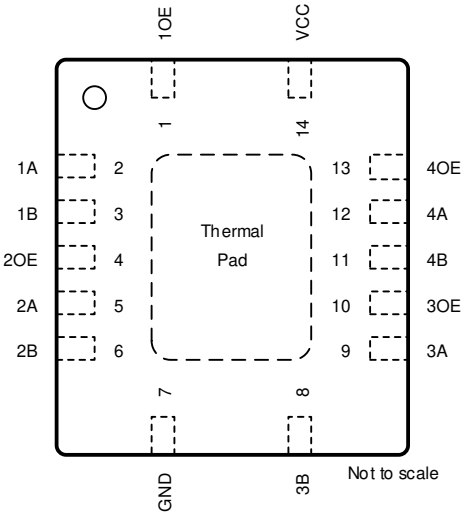

Figure 4-2. RGY and BQA Package, 14 Pin VQFN and WQFN (Top View)

Table 4-1. Pin Functions, D, DGV, PW, RGY

PIN		TYPE[1]	DESCRIPTION
NAME	NO.		
1A	2	I/O	Channel 1 input or output
1B	3	I/O	Channel 1 input or output
1OE	1	I	Output enable, active high
2A	5	I/O	Channel 2 input or output
2B	6	I/O	Channel 2 input or output
2OE	4	I	Output enable, active high
3A	9	I/O	Channel 3 input or output
3B	8	I/O	Channel 3 input or output
3OE	10	I	Output enable, active high
4A	12	I/O	Channel 4 input or output
4B	11	I/O	Channel 4 input or output
4OE	13	I	Output enable, active high
GND	7	—	Ground
V_{CC}	14	P	Power supply
Thermal Pad		—	Exposed thermal pad. There is no requirement to solder this pad; if connected, it must be left floating or tied to GND.

(1) I = input, O = output, I/O = input and output, P = power

Copyright © 2026 Texas Instruments Incorporated

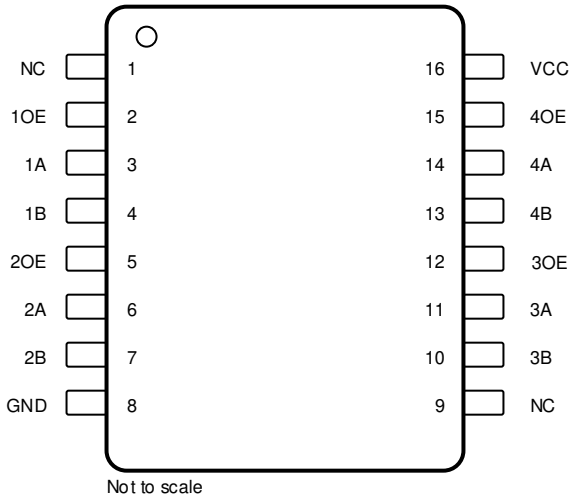

Figure 4-3. DBQ Package, 16 Pin SSOP (Top View)

Table 4-2. Pin Functions, DBQ

PIN		TYPE[1]	DESCRIPTION
NAME	NO.		
1A	3	I/O	Channel 1 input or output
1B	4	I/O	Channel 1 input or output
1OE	2	I	Output enable, active high
2A	6	I/O	Channel 2 input or output
2B	7	I/O	Channel 2 input or output
2OE	5	I	Output enable, active high
3A	11	I/O	Channel 3 input or output
3B	10	I/O	Channel 3 input or output
3OE	12	I	Output enable, active high
4A	14	I/O	Channel 4 input or output
4B	13	I/O	Channel 4 input or output
4OE	15	I	Output enable, active high
GND	8	—	Ground
NC	9	—	No internal connection
V_{CC}	16	P	Power supply

(1) I = input, O = output, I/O = input and output, P = power

Copyright © 2026 Texas Instruments Incorporated

5 Specifications

5.1 Absolute Maximum Ratings

over operating free-air temperature range (unless otherwise noted) (1)

			MIN	MAX	UNIT
V_{CC}	Supply voltage range		–0.5	4.6	V
V_I	Input voltage range(2)		–0.5	4.6	V
$I_{I/O}$	Continuous channel current			128	mA
I_{IK}	Input clamp current	$V_{I/O}$ < 0		–50	mA
T_{stg}	Storage temperature range		–65	150	°C

(1) Operation outside the *Absolute Maximum Ratings* may cause permanent device damage. *Absolute Maximum Ratings* do not imply functional operation of the device at these or any other conditions beyond those listed under *Recommended Operating Conditions*. If used outside the *Recommended Operating Conditions* but within the *Absolute Maximum Ratings*, the device may not be fully functional, and this may affect device reliability, functionality, performance, and shorten the device lifetime.
(2) The input and output negative-voltage ratings may be exceeded if the input and output clamp-current ratings are observed.

5.2 ESD Ratings

			VALUE	UNIT
$V_{(ESD)}$	Electrostatic discharge	Human body model (HBM), per ANSI/ESDA/JEDEC JS-001(1)	±2000	V
		Charged-device model (CDM), per JEDEC specification JESD22-C101(2)	±250	

(1) JEDEC document JEP155 states that 500V HBM allows safe manufacturing with a standard ESD control process.
(2) JEDEC document JEP157 states that 250V CDM allows safe manufacturing with a standard ESD control process.

5.3 Recommended Operating Conditions

(1)

			MIN	MAX	UNIT
V_{CC}	Supply voltage		2.3	3.6	V
V_{IH}	High-level control input voltage	V_{CC} = 2.3V to 2.7V	1.7	V_{CC}	V
		V_{CC} = 2.7V to 3.6V	2	V_{CC}	
V_{IL}	Low-level control input voltage	V_{CC} = 2.3V to 2.7V		0.7	V
		V_{CC} = 2.7V to 3.6V		0.8	
T_A	Operating free-air temperature	PKG = DYY and BQA	–40	125	°C
T_A	Operating free-air temperature	PKG = D, DGV, PW, RGY, DBQ	–40	85	°C

(1) All unused control inputs of the device must be held at V_{CC} or GND to ensure proper device operation. Refer to the TI application note, *Implications of Slow or Floating CMOS Inputs*.

Copyright © 2026 Texas Instruments Incorporated

5.4 Thermal Information

THERMAL METRIC[1]		SN74CBTLV3126							UNIT
		D (SOIC)	DGV (TVSOP)	PW (TSSOP)	RGY (VQFN)	DBQ (SSOP)	DYY (SOT)	BQA (WQFN)	
		14 PINS	14 PINS	14 PINS	14 PINS	16 PINS	16 PINS	14 PINS	
$R_{\theta JA}$	Junction-to-ambient thermal resistance	123.0	154.8	148.9	101.8	118.7	157.0	122.4	°C/W
$R_{\theta JC(top)}$	Junction-to-case (top) thermal resistance	83.5	64.5	81.0	75.6	66.4	99.1	87.5	°C/W
$R_{\theta JB}$	Junction-to-board thermal resistance	81.1	88.4	105.1	41.6	62.2	95.8	32.6	°C/W
Ψ_{JT}	Junction-to-top characterization parameter	39.7	11.1	23.0	74.9	20.9	30.6	87.6	°C/W
Ψ_{JB}	Junction-to-board characterization parameter	80.5	87.4	103.8	103	61.7	95.5	110.9	°C/W
$R_{\theta JC(bot)}$	Junction-to-case (bottom) thermal resistance	N/A	N/A	N/A	58.9	N/A	N/A	54.4	°C/W

(1) For more information about traditional and new thermal metrics, see the *Semiconductor and IC Package Thermal Metrics* application note.

5.5 Electrical Characteristics - D, DGV, DBQ, PW, RGY

over recommended operating free-air temperature range -40 to 85°C (unless otherwise noted)

PARAMETER		TEST CONDITIONS			MIN	TYP[1]	MAX	UNIT
V_{IK}		V_{CC} = 3V,	I_I = –18mA				–1.2	V
I_I		V_{CC} = 3.6V,	V_I = V_{CC} or GND				±1	µA
I_{off}		V_{CC} = 0,	V_I or V_O = 0 to 3.6V				10	µA
I_{CC}		V_{CC} = 3.6V,	I_O = 0,	V_I = V_{CC} or GND			10	µA
ΔI_{CC} [2]	Control inputs	V_{CC} = 3.6V,	One input at 3V,	Other inputs at V_{CC} or GND			300	µA
C_i	Control inputs	V_I = 3V or 0				2.5		pF
$C_{io(OFF)}$		V_O = 3V or 0,	OE = GND			7		pF
r_{on} [3]		V_{CC} = 2.3V, TYP at V_{CC} = 2.5V	V_I = 0	I_I = 64mA		5	8	Ω
				I_I = 24mA		5	8	
			V_I = 1.7V,	I_I = 15mA		27	40	
		V_{CC} = 3V	V_I = 0	I_I = 64mA		5	7	
				I_I = 24mA		5	7	
			V_I = 2.4V,	I_I = 15mA		10	15	

(1) All typical values are at V_{CC} = 3.3V (unless otherwise noted), T_A = 25°C.
(2) This is the increase in supply current for each input that is at the specified voltage level, rather than V_{CC} or GND.
(3) Measured by the voltage drop between the A and B terminals at the indicated current through the switch. On-state resistance is determined by the lower of the voltages of the two (A or B) terminals.

Copyright © 2026 Texas Instruments Incorporated

5.6 Electrical Characteristics - DYY and BQA

over recommended operating free-air temperature range -40 to 125°C (unless otherwise noted)

PARAMETER		TEST CONDITIONS			MIN	TYP(1)	MAX	UNIT
V_{IK}		V_{CC} = 3V,	I_I = –18mA				-1.2	V
I_I		V_{CC} = 3.6V,	V_I = V_{CC} or GND				±1	µA
I_{off}		V_{CC} = 0,	V_I or V_O = 0 to 3.6V				20	µA
I_{CC}		V_{CC} = 3.6V,	I_O = 0,	V_I = V_{CC} or GND			10	µA
ΔI_{CC} (2)	Control inputs	V_{CC} = 3.6V,	One input at 3V,	Other inputs at V_{CC} or GND			300	µA
C_i	Control inputs	V_I = 3V or 0				2.5		pF
$C_{io(OFF)}$		V_O = 3V or 0,	OE = GND			7		pF
r_{on} (3)		V_{CC} = 2.3V, TYP at V_{CC} = 2.5V	V_I = 0	I_I = 64mA		5	10	Ω
				I_I = 24mA		5	10	
			V_I = 1.7V,	I_I = 15mA		27	40	
		V_{CC} = 3V	V_I = 0	I_I = 64mA		5	9	
				I_I = 24mA		5	9	
			V_I = 2.4V,	I_I = 15mA		10	20	

(1) All typical values are at V_{CC} = 3.3V (unless otherwise noted), T_A = 25°C.
(2) This is the increase in supply current for each input that is at the specified voltage level, rather than V_{CC} or GND.
(3) Measured by the voltage drop between the A and B terminals at the indicated current through the switch. On-state resistance is determined by the lower of the voltages of the two (A or B) terminals.

5.7 Switching Characteristics - D, DGV, DBQ, PW, RGY

over recommended operating free-air temperature range -40 to 85°C (unless otherwise noted) (see Section 6)

PARAMETER	FROM (INPUT)	TO (OUTPUT)	V_{CC} = 2.5V ± 0.2V		V_{CC} = 3.3V ± 0.3V		UNIT
			MIN	MAX	MIN	MAX	
t_{pd} (1)	A or B	B or A		0.15		0.25	ns
t_{en}	OE	A or B	1.6	4.5	1.9	4.2	ns
t_{dis}	OE	A or B	1.3	4.7	1	4.8	ns

(1) The propagation delay is the calculated RC time constant of the typical on-state resistance of the switch and the specified load capacitance, when driven by an ideal voltage source (zero output impedance).

5.8 Switching Characteristics - DYY and BQA

over recommended operating free-air temperature range -40 to 125°C (unless otherwise noted) (see Section 6)

PARAMETER	FROM (INPUT)	TO (OUTPUT)	V_{CC} = 2.5V ± 0.2V		V_{CC} = 3.3V ± 0.3V		UNIT
			MIN	MAX	MIN	MAX	
t_{pd} (1)	A or B	B or A		3		3	ns
t_{en}	OE	A or B	1.6	10	1.9	9	ns
t_{dis}	OE	A or B	1.3	9	1	9	ns

(1) The propagation delay is the calculated RC time constant of the typical on-state resistance of the switch and the specified load capacitance, when driven by an ideal voltage source (zero output impedance).

Copyright © 2026 Texas Instruments Incorporated

5.9 Typical Characteristics

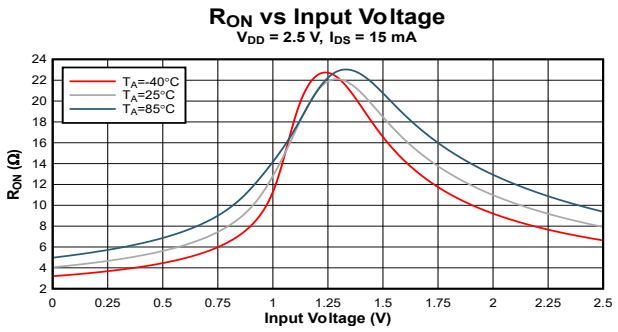

Figure 5-1. R_{ON} vs Input Voltage, V_{DD} = 2.5V, I_{DS} = 15mA

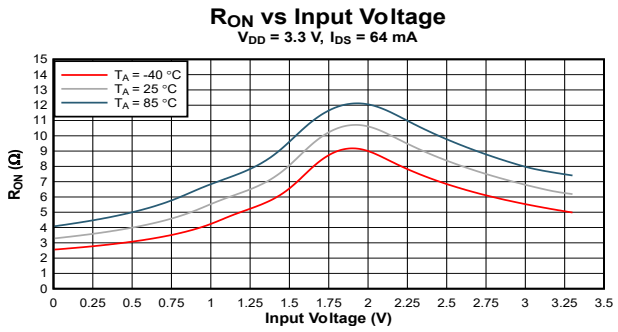

Figure 5-2. R_{ON} vs Input Voltage, V_{DD} = 3.3V, I_{DS} = 64mA

Copyright © 2026 Texas Instruments Incorporated

6 Parameter Measurement Information

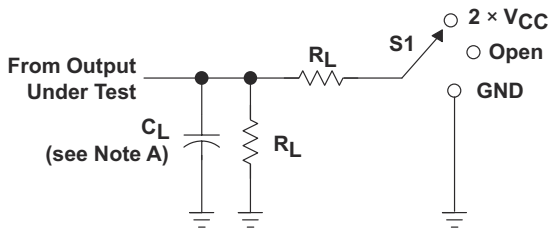

LOAD CIRCUIT

TEST	S1
t_{PLH}/t_{PHL} t_{PLZ}/t_{PZL} t_{PHZ}/t_{PZH}	Open 2 × V_{CC} GND

V_{CC}	C_L	R_L	V_Δ
2.5 V ±0.2 V	30 pF	500 Ω	0.15 V
3.3 V ±0.3 V	50 pF	500 Ω	0.3 V

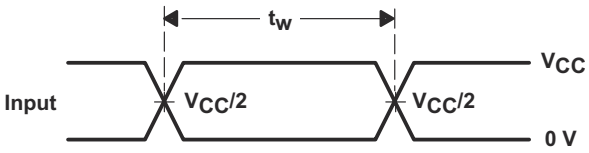

VOLTAGE WAVEFORMS
PULSE DURATION

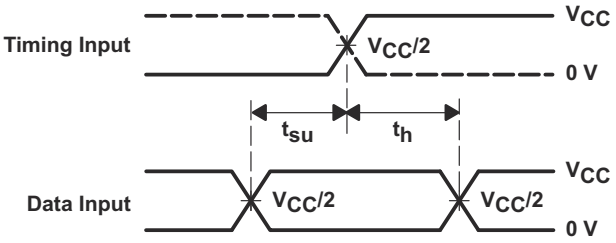

VOLTAGE WAVEFORMS
SETUP AND HOLD TIMES

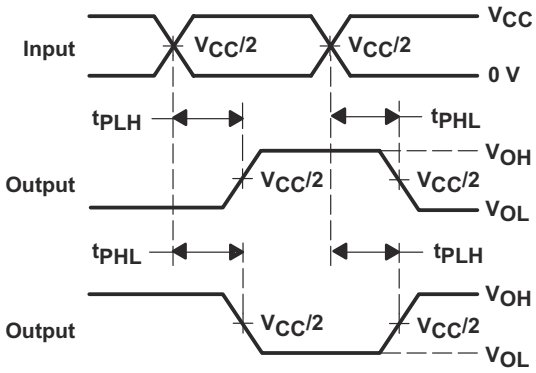

VOLTAGE WAVEFORMS
PROPAGATION DELAY TIMES
INVERTING AND NONINVERTING OUTPUTS

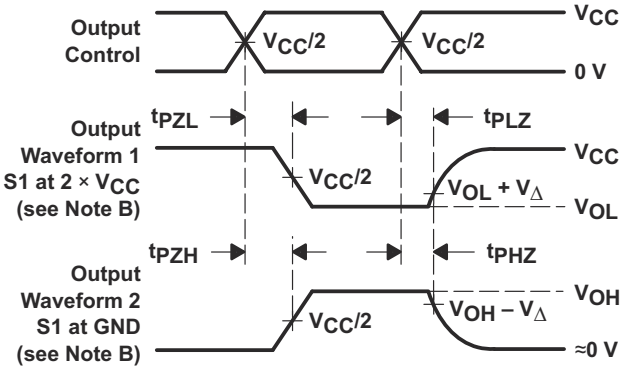

VOLTAGE WAVEFORMS
ENABLE AND DISABLE TIMES
LOW- AND HIGH-LEVEL ENABLING

A. C_L includes probe and jig capacitance.
B. Waveform 1 is for an output with internal conditions such that the output is low except when disabled by the output control. Waveform 2 is for an output with internal conditions such that the output is high except when disabled by the output control.
C. All input pulses are supplied by generators having the following characteristics: PRR ≤ 10MHz, Z_O = 50Ω, t_r ≤ 2ns, t_f ≤ 2ns.
D. The outputs are measured one at a time with one transition per measurement.
E. t_{PLZ} and t_{PHZ} are the same as t_{dis}.
F. t_{PZL} and t_{PZH} are the same as t_{en}.
G. t_{PLH} and t_{PHL} are the same as t_{pd}.
H. All parameters and waveforms are not applicable to all devices.

Figure 6-1. Load Circuit and Voltage Waveforms

Copyright © 2026 Texas Instruments Incorporated

7 Detailed Description

7.1 Overview

The SN74CBTLV3126 quadruple FET bus switch features independent line switches. Each switch is disabled when the associated output-enable (OE) input is low. This device is fully specified for partial-power-down applications using Ioff. The Ioff feature ensures that damaging current will not backflow through the device when it is powered down. The SN74CBTLV3126 device has isolation during power off. To ensure the high-impedance state during power up or power down, OE should be tied to GND through a pull down resistor; the minimum value of the resistor is determined by the current-sinking capability of the driver.

7.2 Functional Block Diagram

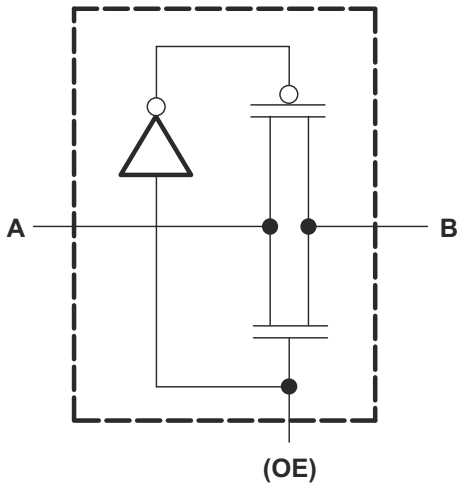

7.3 Feature Description

The SN74CBTLV3126 features 5Ω switch connection between ports, allowing for low signal loss across the switch. Rail-to-rail switching on data I/O allows for full voltage swing outputs. I_{off} supports partial-power-down mode operation, protecting the chip from voltages at output ports when it is not powered on. Latch-up performance exceeds 100mA per JESD 78, Class II.

Copyright © 2026 Texas Instruments Incorporated

7.4 Device Functional Modes

7.4.1 Function Table (Each Bus Switch)

Table 7-1 provides the truth table for the SN74CBTLV3126.

Table 7-1. Truth Table

INPUT OE	FUNCTION
L	Disconnect
H	A port = B port

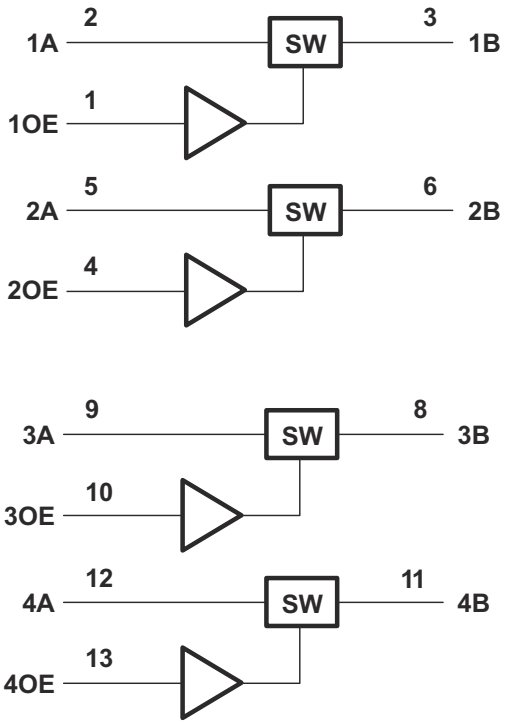

Figure 7-1. Logic Diagram (Positive Logic)

8 Application and Implementation

Note

Information in the following applications sections is not part of the TI component specification, and TI does not warrant its accuracy or completeness. TI's customers are responsible for determining suitability of components for their purposes, as well as validating and testing their design implementation to confirm system functionality.

8.1 Application Information

One useful application to take advantage of the SN74CBTLV3126 features is isolating various protocols from a possessor or MCU such as JTAG, SPI, or standard GPIO signals. The device provides excellent isolation performance when the device is powered. The added benefit of powered-off protection allows a system to minimize complexity by eliminating the need for power sequencing in hot-swap and live insertion applications.

8.2 Typical Application

8.2.1 Protocol and Signal Isolation

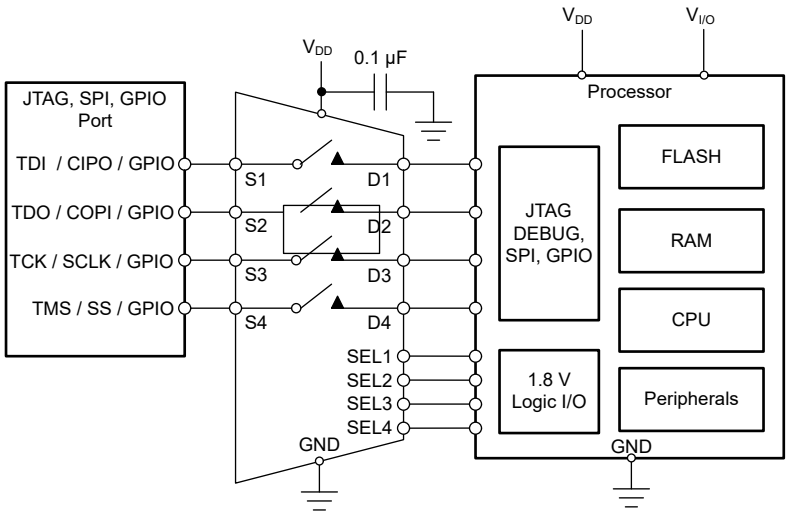

Figure 8-1. Typical Appliction

8.2.1.1 Design Requirements

For this design example, use the parameters listed in Table 8-1.

Table 8-1. Design Parameters

PARAMETERS	VALUES
Supply (V_{DD})	3.3V
Input or output signal range	0V to 3.3V
Control logic thresholds	1.8V compatible

Copyright © 2026 Texas Instruments Incorporated

8.2.1.2 Detailed Design Procedure

The SN74CBTLV3126 can operate without any external components except for the supply decoupling capacitors. TI recommends that the digital control pins (OE) be pulled up to V_{CC} or down to GND to avoid an undesired switch state that could result from the floating pin. All input signals passing through the switch must fall within the *Recommend Operating Conditions* of the SN74CBTLV3126 including signal range and continuous current. For this design example, with a supply of 3.3V, the signals can range from 0V to 3.3V when the device is powered. This example can also utilize the Powered-off Protection feature, and the inputs can range from 0V to 3.3V when V_{DD} = 0V.

8.3 Power Supply Recommendations

The power supply can be any voltage between the minimum and maximum supply voltage rating listed in the *Recommended Operating Conditions* table. Each V_{CC} terminal should have a good bypass capacitor to prevent power disturbance. For devices with a single supply, a 0.1µF bypass capacitor is recommended. If multiple pins are labeled V_{CC}, then a 0.01µF or 0.022µF capacitor is recommended for each V_{CC} because the V_{CC} pins are tied together internally. For devices with dual supply pins operating at different voltages, for example V_{CC} and V_{DD}, a 0.1µF bypass capacitor is recommended for each supply pin. To reject different frequencies of noise, use multiple bypass capacitors in parallel. Capacitors with values of 0.1µF and 1µF are commonly used in parallel. The bypass capacitor must be installed as close to the power terminal as possible for best results.

8.4 Layout

8.4.1 Layout Guidelines

When a PCB trace turns a corner at a 90° angle, a reflection can occur. A reflection occurs primarily because of the change of width of the trace. At the apex of the turn, the trace width increases to 1.414 times the width. This increase upsets the transmission-line characteristics, especially the distributed capacitance and self–inductance of the trace which results in the reflection. Not all PCB traces can be straight, and therefore; some traces must turn corners. Figure 8-2 shows progressively better techniques of rounding corners. Only the last example (BEST) maintains constant trace width and minimizes reflections.

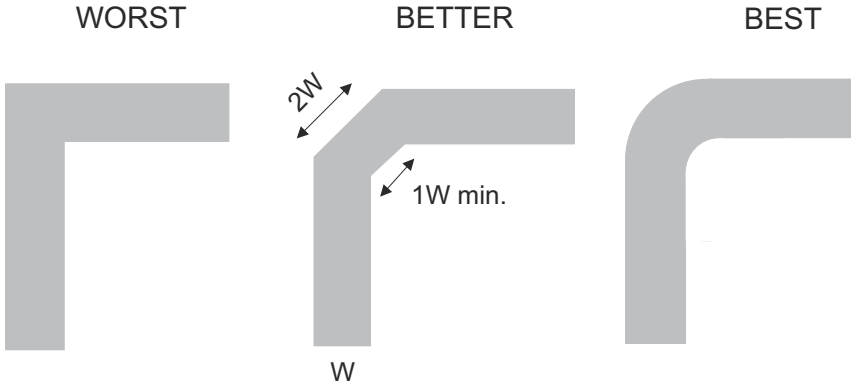

Figure 8-2. Trace Example

Route the high-speed signals using a minimum of vias and corners which reduces signal reflections and impedance changes. When a via must be used, increase the clearance size around it to minimize its capacitance. Each via introduces discontinuities in the signal's transmission line and increases the chance of picking up interference from the other layers of the board. Be careful when designing test points, through-hole pins are not recommended at high frequencies.

Do not route high speed signal traces under or near crystals, oscillators, clock signal generators, switching regulators, mounting holes, magnetic devices or ICs that use or duplicate clock signals.

- Avoid stubs on the high-speed signals traces because the stubs cause signal reflections.
- Route all high-speed signal traces over continuous GND planes, with no interruptions.
- Avoid crossing over anti-etch, commonly found with plane splits.

Copyright © 2026 Texas Instruments Incorporated

- When working with high frequencies, a printed circuit board with at least four layers is recommended; two signal layers separated by a ground and power layer as shown in Figure 8-3.

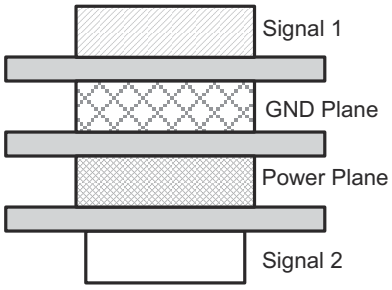

Figure 8-3. Example Layout

The majority of signal traces must run on a single layer, preferably Signal 1. Immediately next to this layer must be the GND plane, which is solid with no cuts. Avoid running signal traces across a split in the ground or power plane. When running across split planes is unavoidable, sufficient decoupling must be used. Minimizing the number of signal vias reduces EMI by reducing inductance at high frequencies.

Figure 8-4 shows an example of a PCB layout with the SN74CBTLV3126. Some key considerations are:

- Decouple the V_{DD} pin with a 0.1µF capacitor, placed as close to the pin as possible. Make sure that the capacitor voltage rating is sufficient for the V_{DD} supply.
- High-speed switches require proper layout and design procedures for optimum performance.
- Keep the input lines as short as possible.
- Use a solid ground plane to help reduce electromagnetic interference (EMI) noise pickup.
- Do not run sensitive analog traces in parallel with digital traces. Avoid crossing digital and analog traces if possible, and only make perpendicular crossings when necessary.

8.4.2 Layout Example

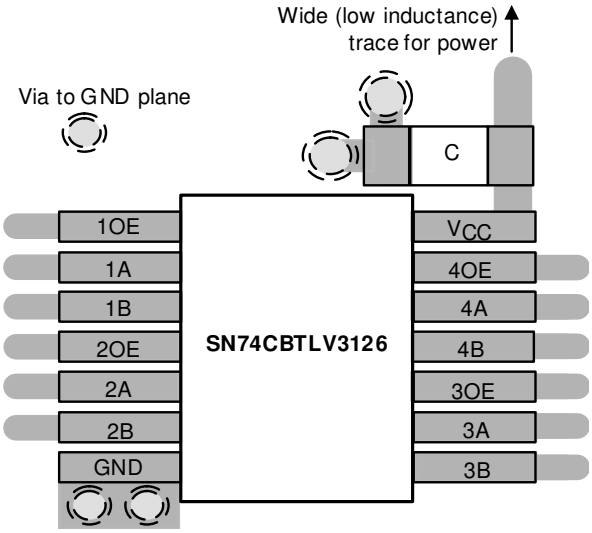

Figure 8-4. Example Layout

Copyright © 2026 Texas Instruments Incorporated

9 Device and Documentation Support

9.1 Receiving Notification of Documentation Updates

To receive notification of documentation updates, navigate to the device product folder on ti.com. Click on *Notifications* to register and receive a weekly digest of any product information that has changed. For change details, review the revision history included in any revised document.

9.2 Support Resources

TI E2E™ support forums are an engineer's go-to source for fast, verified answers and design help — straight from the experts. Search existing answers or ask your own question to get the quick design help you need.

Linked content is provided "AS IS" by the respective contributors. They do not constitute TI specifications and do not necessarily reflect TI's views; see TI's Terms of Use.

9.3 Trademarks

TI E2E™ is a trademark of Texas Instruments.
All trademarks are the property of their respective owners.

9.4 Electrostatic Discharge Caution



This integrated circuit can be damaged by ESD. Texas Instruments recommends that all integrated circuits be handled with appropriate precautions. Failure to observe proper handling and installation procedures can cause damage.

ESD damage can range from subtle performance degradation to complete device failure. Precision integrated circuits may be more susceptible to damage because very small parametric changes could cause the device not to meet its published specifications.

9.5 Glossary

TI Glossary	This glossary lists and explains terms, acronyms, and definitions.

10 Revision History

NOTE: Page numbers for previous revisions may differ from page numbers in the current version.

Changes from Revision M (January 2026) to Revision N (July 2026)	Page
• Added packages with 125°C capability	1
• Added specifications for DYY and BQB packages	5
• Updated thermal information for all packages	6
• Added Typical Characteristics	8

Changes from Revision L (August 2022) to Revision M (January 2026)	Page
• Updated the numbering format for tables, figures, and cross-references throughout the document	1
• Added SN74CBTLV3126BQAR	1

11 Mechanical, Packaging, and Orderable Information

The following pages include mechanical, packaging, and orderable information. This information is the most current data available for the designated devices. This data is subject to change without notice and revision of this document. For browser-based versions of this data sheet, refer to the left-hand navigation.

Copyright © 2026 Texas Instruments Incorporated

PACKAGING INFORMATION

Orderable part number	Status (1)	Material type (2)	Package | Pins	Package qty | Carrier	RoHS (3)	Lead finish/ Ball material (4)	MSL rating/ Peak reflow (5)	Op temp (°C)	Part marking (6)
74CBTLV3126DBQRG4	Active	Production	SSOP (DBQ) | 16	2500 | LARGE T&R	Yes	NIPDAU	Level-2-260C-1 YEAR	-40 to 85	CL126
74CBTLV3126DBQRG4.A	Active	Production	SSOP (DBQ) | 16	2500 | LARGE T&R	Yes	NIPDAU	Level-2-260C-1 YEAR	-40 to 85	CL126
74CBTLV3126DBQRG4.B	Active	Production	SSOP (DBQ) | 16	2500 | LARGE T&R	Yes	NIPDAU	Level-2-260C-1 YEAR	-40 to 85	CL126
74CBTLV3126DGVRG4	Active	Production	TVSOP (DGV) | 14	2000 | LARGE T&R	Yes	NIPDAU	Level-1-260C-UNLIM	-40 to 85	CL126
74CBTLV3126DGVRG4.B	Active	Production	TVSOP (DGV) | 14	2000 | LARGE T&R	Yes	NIPDAU	Level-1-260C-UNLIM	-40 to 85	CL126
SN74CBTLV3126BQAR	Active	Production	WQFN (BQA) | 14	3000 | LARGE T&R	Yes	NIPDAU	Level-1-260C-UNLIM	-40 to 85	CL126
SN74CBTLV3126D	Obsolete	Production	SOIC (D) | 14	-	-	Call TI	Call TI	-40 to 85	CBTLV3126
SN74CBTLV3126DBQR	Active	Production	SSOP (DBQ) | 16	2500 | LARGE T&R	Yes	NIPDAU	Level-2-260C-1 YEAR	-40 to 85	CL126
SN74CBTLV3126DBQR.A	Active	Production	SSOP (DBQ) | 16	2500 | LARGE T&R	Yes	NIPDAU	Level-2-260C-1 YEAR	-40 to 85	CL126
SN74CBTLV3126DBQR.B	Active	Production	SSOP (DBQ) | 16	2500 | LARGE T&R	Yes	NIPDAU	Level-2-260C-1 YEAR	-40 to 85	CL126
SN74CBTLV3126DGVR	Active	Production	TVSOP (DGV) | 14	2000 | LARGE T&R	Yes	NIPDAU	Level-1-260C-UNLIM	-40 to 85	CL126
SN74CBTLV3126DGVR.B	Active	Production	TVSOP (DGV) | 14	2000 | LARGE T&R	Yes	NIPDAU	Level-1-260C-UNLIM	-40 to 85	CL126
SN74CBTLV3126DR	Active	Production	SOIC (D) | 14	2500 | LARGE T&R	Yes	NIPDAU	Level-1-260C-UNLIM	-40 to 85	CBTLV3126
SN74CBTLV3126DR.A	Active	Production	SOIC (D) | 14	2500 | LARGE T&R	Yes	NIPDAU	Level-1-260C-UNLIM	-40 to 85	CBTLV3126
SN74CBTLV3126DR.B	Active	Production	SOIC (D) | 14	2500 | LARGE T&R	Yes	NIPDAU	Level-1-260C-UNLIM	-40 to 85	CBTLV3126
SN74CBTLV3126DYYR	Active	Production	SOT-23-THIN (DYY) | 14	3000 | LARGE T&R	Yes	Call TI	Level-1-260C-UNLIM	-40 to 85	CL126
SN74CBTLV3126PW	Obsolete	Production	TSSOP (PW) | 14	-	-	Call TI	Call TI	-40 to 85	CL126
SN74CBTLV3126PWR	Active	Production	TSSOP (PW) | 14	2000 | LARGE T&R	Yes	NIPDAU | SN	Level-1-260C-UNLIM	-40 to 85	CL126
SN74CBTLV3126PWR.A	Active	Production	TSSOP (PW) | 14	2000 | LARGE T&R	Yes	NIPDAU	Level-1-260C-UNLIM	-40 to 85	CL126
SN74CBTLV3126PWR.B	Active	Production	TSSOP (PW) | 14	2000 | LARGE T&R	Yes	NIPDAU	Level-1-260C-UNLIM	-40 to 85	CL126
SN74CBTLV3126PWRG4	Active	Production	TSSOP (PW) | 14	2000 | LARGE T&R	Yes	NIPDAU	Level-1-260C-UNLIM	-40 to 85	CL126
SN74CBTLV3126PWRG4.A	Active	Production	TSSOP (PW) | 14	2000 | LARGE T&R	Yes	NIPDAU	Level-1-260C-UNLIM	-40 to 85	CL126
SN74CBTLV3126PWRG4.B	Active	Production	TSSOP (PW) | 14	2000 | LARGE T&R	Yes	NIPDAU	Level-1-260C-UNLIM	-40 to 85	CL126
SN74CBTLV3126RGYR	Active	Production	VQFN (RGY) | 14	3000 | LARGE T&R	Yes	NIPDAU	Level-2-260C-1 YEAR	-40 to 85	CL126
SN74CBTLV3126RGYR.A	Active	Production	VQFN (RGY) | 14	3000 | LARGE T&R	Yes	NIPDAU	Level-2-260C-1 YEAR	-40 to 85	CL126
SN74CBTLV3126RGYR.B	Active	Production	VQFN (RGY) | 14	3000 | LARGE T&R	Yes	NIPDAU	Level-2-260C-1 YEAR	-40 to 85	CL126

(1) **Status:** For more details on status, see our product life cycle.

(2) **Material type:** When designated, preproduction parts are prototypes/experimental devices, and are not yet approved or released for full production. Testing and final process, including without limitation quality assurance, reliability performance testing, and/or process qualification, may not yet be complete, and this item is subject to further changes or possible discontinuation. If available for ordering, purchases will be subject to an additional waiver at checkout, and are intended for early internal evaluation purposes only. These items are sold without warranties of any kind.

(3) **RoHS values:** Yes, No, RoHS Exempt. See the TI RoHS Statement for additional information and value definition.

(4) **Lead finish/Ball material:** Parts may have multiple material finish options. Finish options are separated by a vertical ruled line. Lead finish/Ball material values may wrap to two lines if the finish value exceeds the maximum column width.

(5) **MSL rating/Peak reflow:** The moisture sensitivity level ratings and peak solder (reflow) temperatures. In the event that a part has multiple moisture sensitivity ratings, only the lowest level per JEDEC standards is shown. Refer to the shipping label for the actual reflow temperature that will be used to mount the part to the printed circuit board.

(6) **Part marking:** There may be an additional marking, which relates to the logo, the lot trace code information, or the environmental category of the part.

Multiple part markings will be inside parentheses. Only one part marking contained in parentheses and separated by a "~" will appear on a part. If a line is indented then it is a continuation of the previous line and the two combined represent the entire part marking for that device.

Important Information and Disclaimer: The information provided on this page represents TI's knowledge and belief as of the date that it is provided. TI bases its knowledge and belief on information provided by third parties, and makes no representation or warranty as to the accuracy of such information. Efforts are underway to better integrate information from third parties. TI has taken and continues to take reasonable steps to provide representative and accurate information but may not have conducted destructive testing or chemical analysis on incoming materials and chemicals. TI and TI suppliers consider certain information to be proprietary, and thus CAS numbers and other limited information may not be available for release.

In no event shall TI's liability arising out of such information exceed the total purchase price of the TI part(s) at issue in this document sold by TI to Customer on an annual basis.

OTHER QUALIFIED VERSIONS OF SN74CBTLV3126 :

- Automotive : SN74CBTLV3126-Q1

NOTE: Qualified Version Definitions:

- Automotive - Q100 devices qualified for high-reliability automotive applications targeting zero defects

TAPE AND REEL INFORMATION

REEL DIMENSIONS

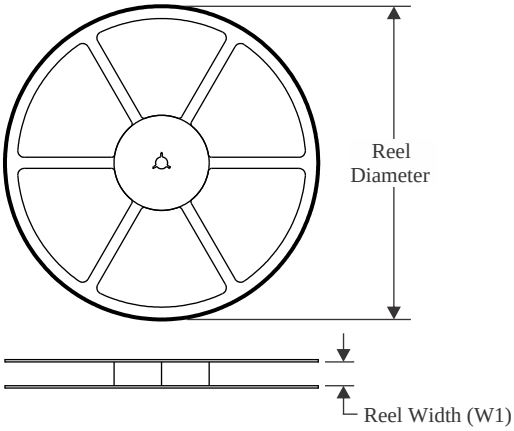

TAPE DIMENSIONS

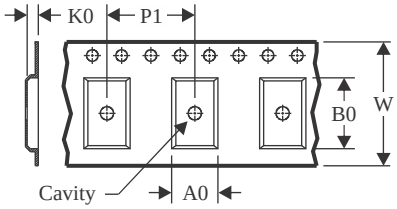

A0	Dimension designed to accommodate the component width
B0	Dimension designed to accommodate the component length
K0	Dimension designed to accommodate the component thickness
W	Overall width of the carrier tape
P1	Pitch between successive cavity centers

QUADRANT ASSIGNMENTS FOR PIN 1 ORIENTATION IN TAPE

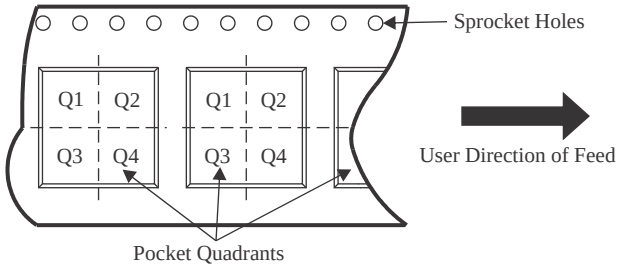

*All dimensions are nominal

Device	Package Type	Package Drawing	Pins	SPQ	Reel Diameter (mm)	Reel Width W1 (mm)	A0 (mm)	B0 (mm)	K0 (mm)	P1 (mm)	W (mm)	Pin1 Quadrant
74CBTLV3126DBQRG4	SSOP	DBQ	16	2500	330.0	12.5	6.4	5.2	2.1	8.0	12.0	Q1
74CBTLV3126DGVRG4	TVSOP	DGV	14	2000	330.0	12.4	6.8	4.0	1.6	8.0	12.0	Q1
SN74CBTLV3126BQAR	WQFN	BQA	14	3000	180.0	12.4	2.8	3.3	1.1	4.0	12.0	Q1
SN74CBTLV3126DBQR	SSOP	DBQ	16	2500	330.0	12.5	6.4	5.2	2.1	8.0	12.0	Q1
SN74CBTLV3126DBQR	SSOP	DBQ	16	2500	330.0	12.4	6.4	5.2	2.1	8.0	12.0	Q1
SN74CBTLV3126DGVR	TVSOP	DGV	14	2000	330.0	12.4	6.8	4.0	1.6	8.0	12.0	Q1
SN74CBTLV3126DR	SOIC	D	14	2500	330.0	16.4	6.5	9.0	2.1	8.0	16.0	Q1
SN74CBTLV3126DYYR	SOT-23-THIN	DYY	14	3000	330.0	12.4	4.5	3.56	1.35	8.0	12.0	Q3
SN74CBTLV3126PWR	TSSOP	PW	14	2000	330.0	12.4	6.9	5.3	1.6	8.0	12.0	Q1
SN74CBTLV3126PWR	TSSOP	PW	14	2000	330.0	12.4	6.9	5.6	1.6	8.0	12.0	Q1
SN74CBTLV3126PWR	TSSOP	PW	14	2000	330.0	12.4	6.9	5.6	1.6	8.0	12.0	Q1
SN74CBTLV3126PWR	TSSOP	PW	14	2000	330.0	12.4	6.9	5.6	1.6	8.0	12.0	Q1
SN74CBTLV3126PWRG4	TSSOP	PW	14	2000	330.0	12.4	6.9	5.6	1.6	8.0	12.0	Q1
SN74CBTLV3126RGYR	VQFN	RGY	14	3000	330.0	12.4	3.75	3.75	1.15	8.0	12.0	Q1

TAPE AND REEL BOX DIMENSIONS

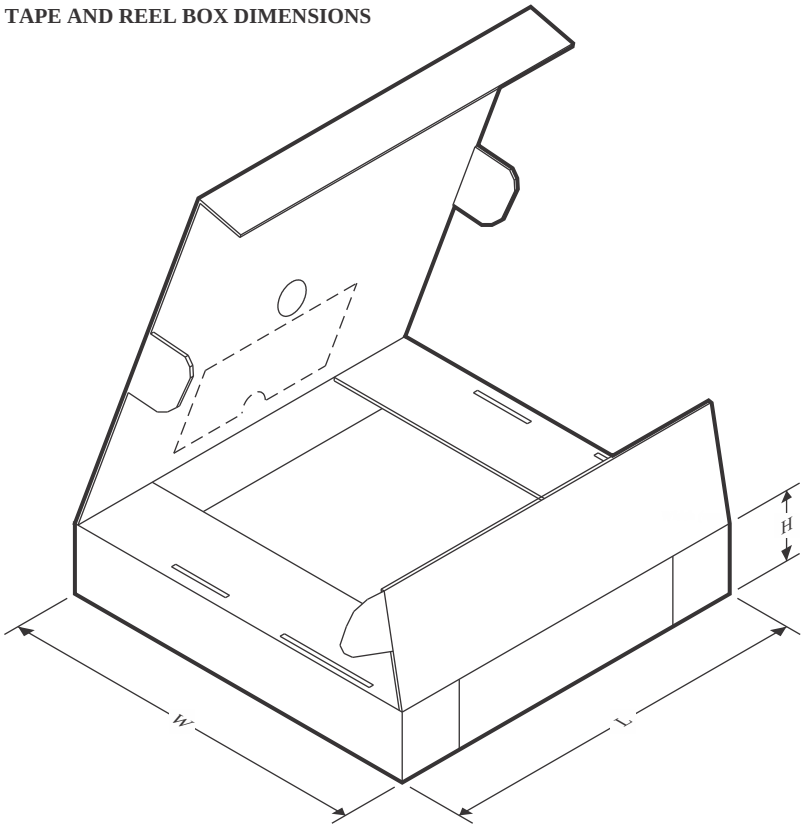

*All dimensions are nominal

Device	Package Type	Package Drawing	Pins	SPQ	Length (mm)	Width (mm)	Height (mm)
74CBTLV3126DBQRG4	SSOP	DBQ	16	2500	353.0	353.0	32.0
74CBTLV3126DGVRG4	TVSOP	DGV	14	2000	353.0	353.0	32.0
SN74CBTLV3126BQAR	WQFN	BQA	14	3000	210.0	185.0	35.0
SN74CBTLV3126DBQR	SSOP	DBQ	16	2500	353.0	353.0	32.0
SN74CBTLV3126DBQR	SSOP	DBQ	16	2500	353.0	353.0	32.0
SN74CBTLV3126DGVR	TVSOP	DGV	14	2000	353.0	353.0	32.0
SN74CBTLV3126DR	SOIC	D	14	2500	353.0	353.0	32.0
SN74CBTLV3126DYYR	SOT-23-THIN	DYY	14	3000	360.0	360.0	36.0
SN74CBTLV3126PWR	TSSOP	PW	14	2000	367.0	367.0	35.0
SN74CBTLV3126PWR	TSSOP	PW	14	2000	356.0	356.0	35.0
SN74CBTLV3126PWR	TSSOP	PW	14	2000	353.0	353.0	32.0
SN74CBTLV3126PWR	TSSOP	PW	14	2000	367.0	367.0	35.0
SN74CBTLV3126PWRG4	TSSOP	PW	14	2000	353.0	353.0	32.0
SN74CBTLV3126RGYR	VQFN	RGY	14	3000	353.0	353.0	32.0

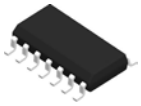

PACKAGE OUTLINE

D0014A

SOIC - 1.75 mm max height

SMALL OUTLINE INTEGRATED CIRCUIT

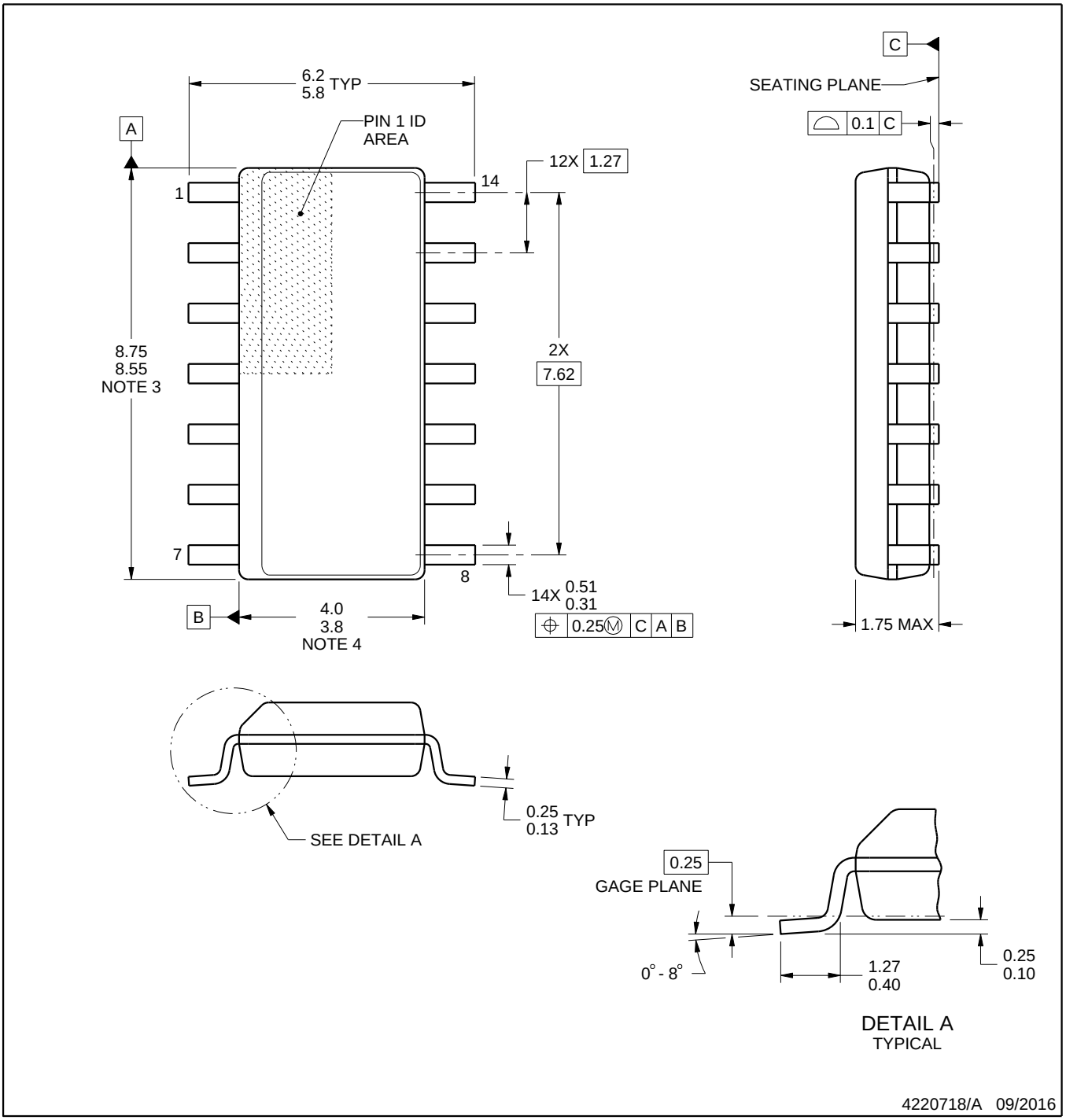

NOTES:

1. All linear dimensions are in millimeters. Dimensions in parenthesis are for reference only. Dimensioning and tolerancing per ASME Y14.5M.
2. This drawing is subject to change without notice.
3. This dimension does not include mold flash, protrusions, or gate burrs. Mold flash, protrusions, or gate burrs shall not exceed 0.15 mm, per side.
4. This dimension does not include interlead flash. Interlead flash shall not exceed 0.43 mm, per side.
5. Reference JEDEC registration MS-012, variation AB.

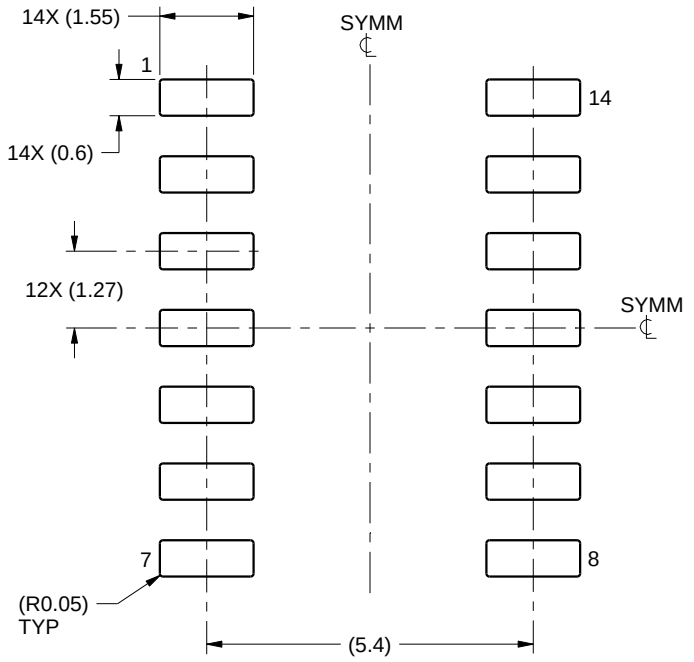

LAND PATTERN EXAMPLE
SCALE:8X

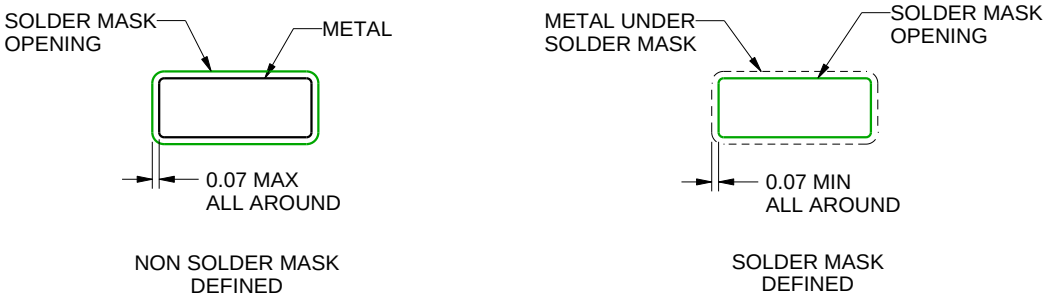

SOLDER MASK DETAILS

4220718/A 09/2016

NOTES: (continued)

6. Publication IPC-7351 may have alternate designs.
7. Solder mask tolerances between and around signal pads can vary based on board fabrication site.

EXAMPLE STENCIL DESIGN

D0014A

SOIC - 1.75 mm max height

SMALL OUTLINE INTEGRATED CIRCUIT

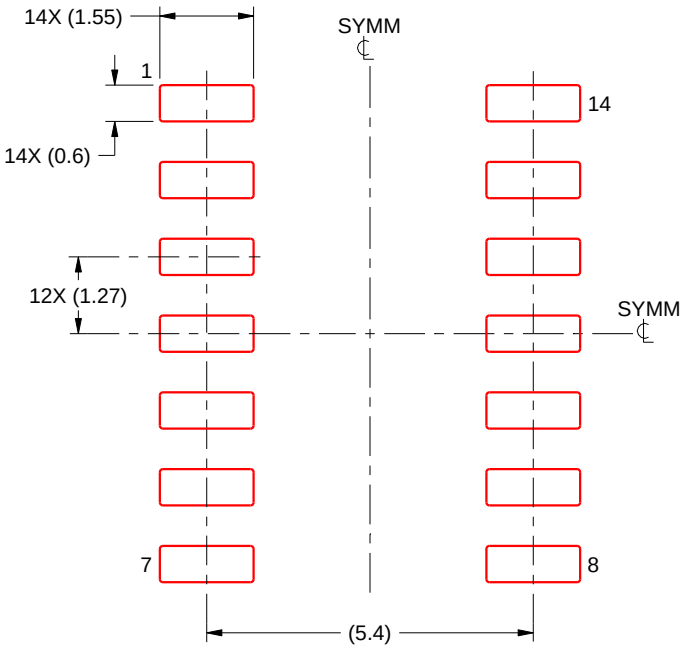

SOLDER PASTE EXAMPLE
BASED ON 0.125 mm THICK STENCIL
SCALE:8X

4220718/A 09/2016

NOTES: (continued)

8. Laser cutting apertures with trapezoidal walls and rounded corners may offer better paste release. IPC-7525 may have alternate design recommendations.
9. Board assembly site may have different recommendations for stencil design.

GENERIC PACKAGE VIEW

BQA 14

WQFN - 0.8 mm max height

2.5 x 3, 0.5 mm pitch

PLASTIC QUAD FLATPACK - NO LEAD

This image is a representation of the package family, actual package may vary.
Refer to the product data sheet for package details.

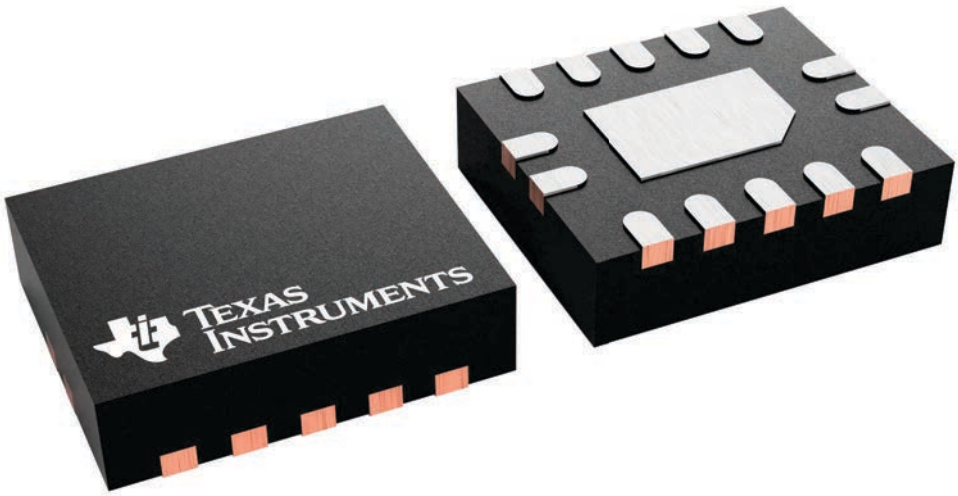

PACKAGE OUTLINE

BQA0014A

WQFN - 0.8 mm max height

PLASTIC QUAD FLAT PACK-NO LEAD

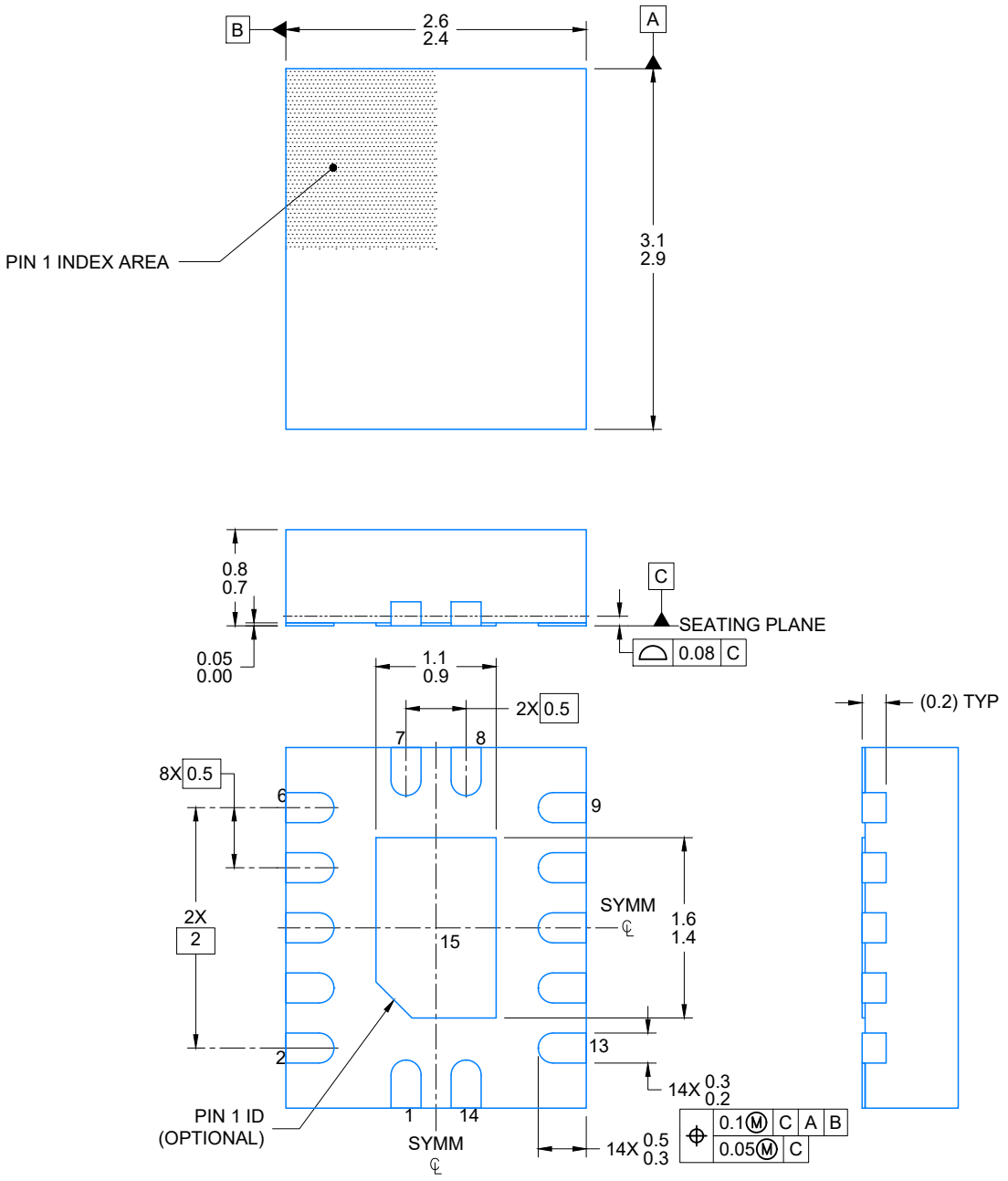

NOTES:

1. All linear dimensions are in millimeters. Any dimensions in parenthesis are for reference only. Dimensioning and tolerancing per ASME Y14.5M.
2. This drawing is subject to change without notice.
3. The package thermal pad must be soldered to the printed circuit board for optimal thermal and mechanical performance.

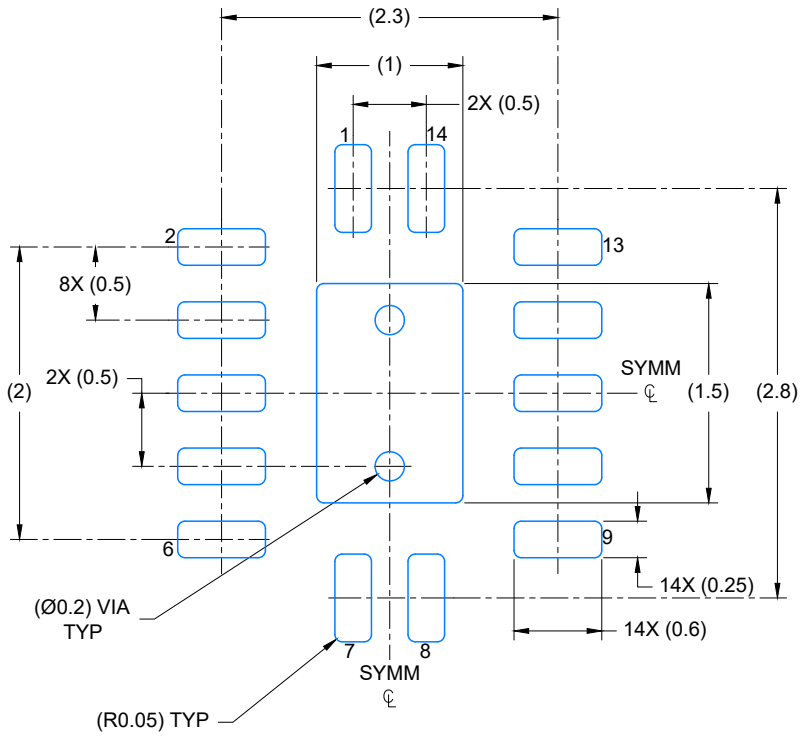

LAND PATTERN EXAMPLE
EXPOSED METAL SHOWN
SCALE: 20X

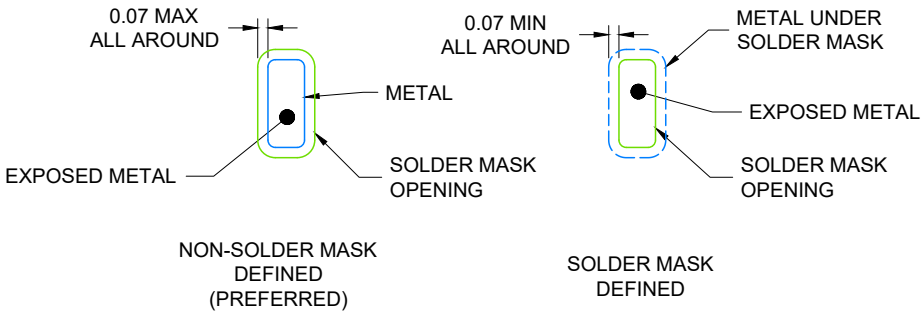

4224636/A 11/2018

NOTES: (continued)

4. This package is designed to be soldered to a thermal pad on the board. For more information, see Texas Instruments literature number SLUA271 (www.ti.com/lit/slua271).
5. Vias are optional depending on application, refer to device data sheet. If any vias are implemented, refer to their locations shown on this view. It is recommended that vias under paste be filled, plugged or tented.

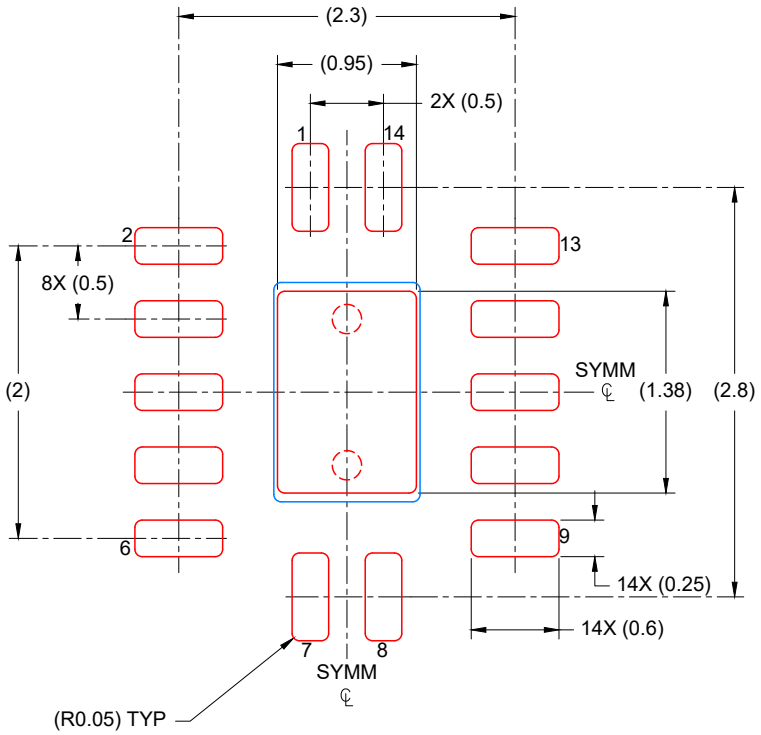

SOLDER PASTE EXAMPLE
BASED ON 0.125 mm THICK STENCIL

EXPOSED PAD
88% PRINTED COVERAGE BY AREA
SCALE: 20X

4224636/A 11/2018

NOTES: (continued)

6. Laser cutting apertures with trapezoidal walls and rounded corners may offer better paste release. IPC-7525 may have alternate design recommendations.

PACKAGE OUTLINE

PW0014A

TSSOP - 1.2 mm max height

SMALL OUTLINE PACKAGE

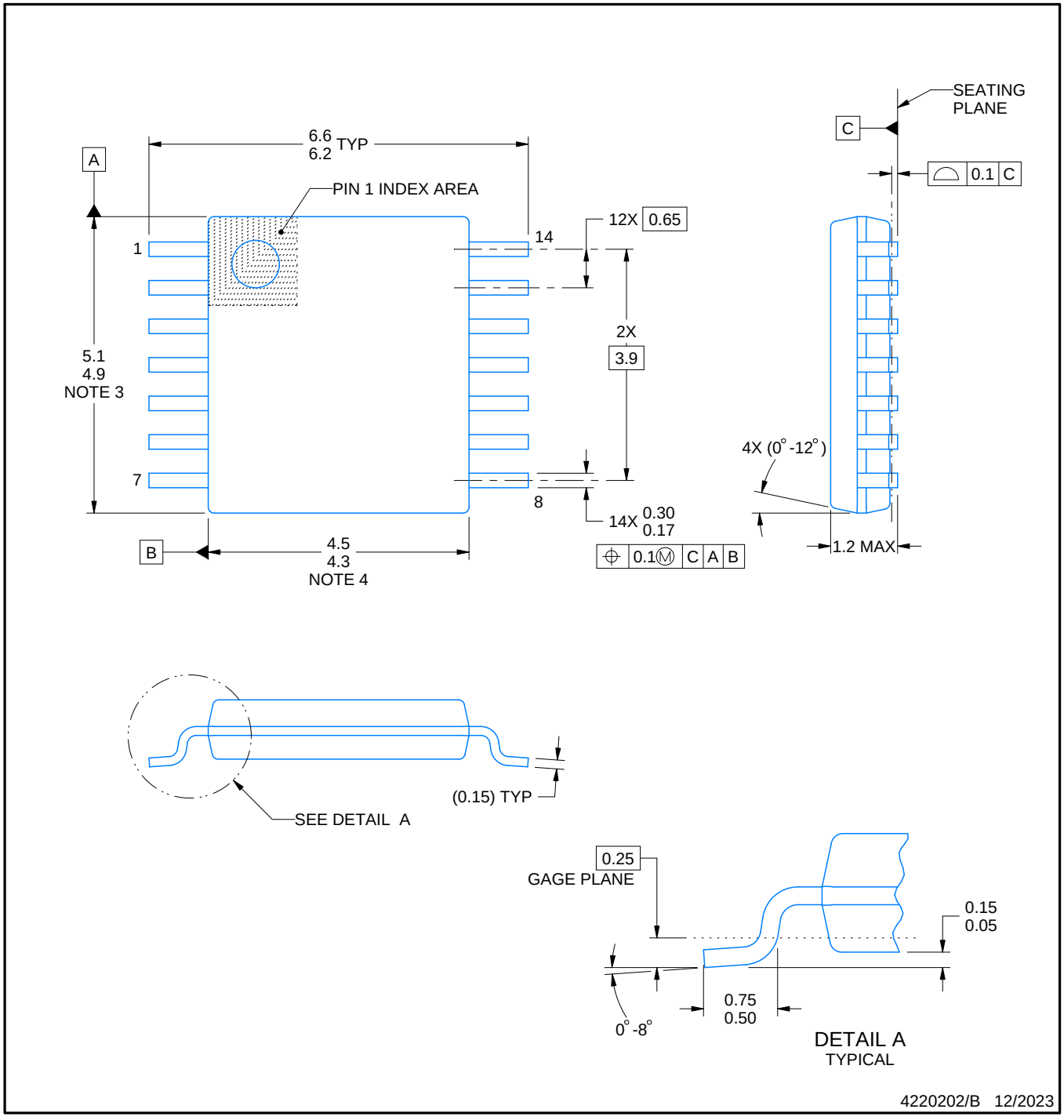

NOTES:

1. All linear dimensions are in millimeters. Any dimensions in parenthesis are for reference only. Dimensioning and tolerancing per ASME Y14.5M.
2. This drawing is subject to change without notice.
3. This dimension does not include mold flash, protrusions, or gate burrs. Mold flash, protrusions, or gate burrs shall not exceed 0.15 mm per side.
4. This dimension does not include interlead flash. Interlead flash shall not exceed 0.25 mm per side.
5. Reference JEDEC registration MO-153.

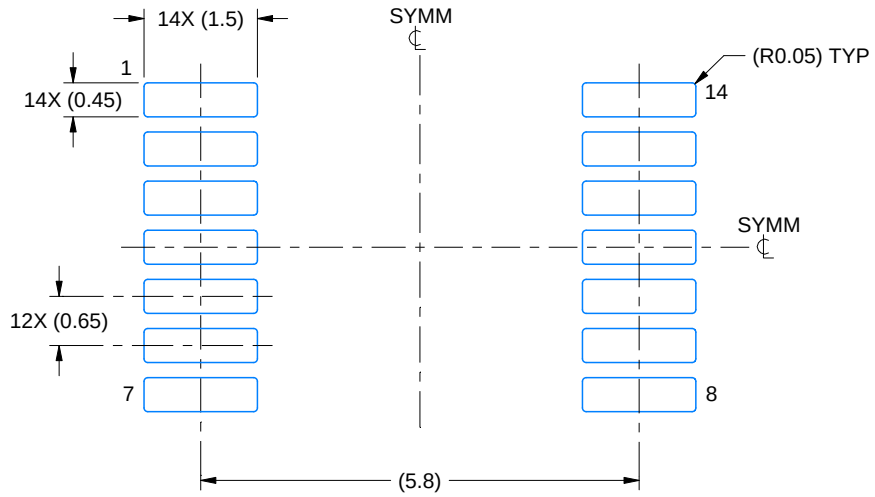

LAND PATTERN EXAMPLE
EXPOSED METAL SHOWN
SCALE: 10X

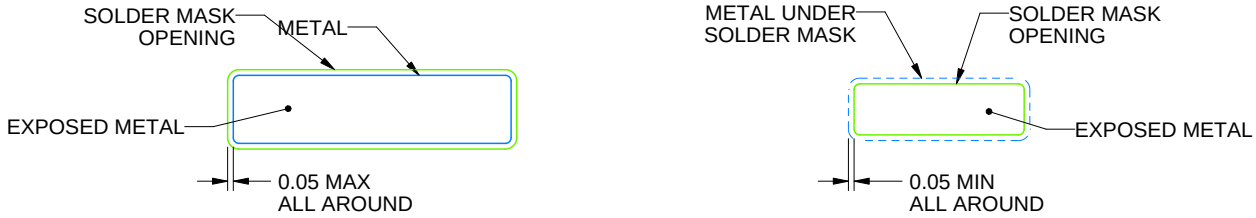

SOLDER MASK DETAILS

4220202/B 12/2023

NOTES: (continued)

6. Publication IPC-7351 may have alternate designs.
7. Solder mask tolerances between and around signal pads can vary based on board fabrication site.

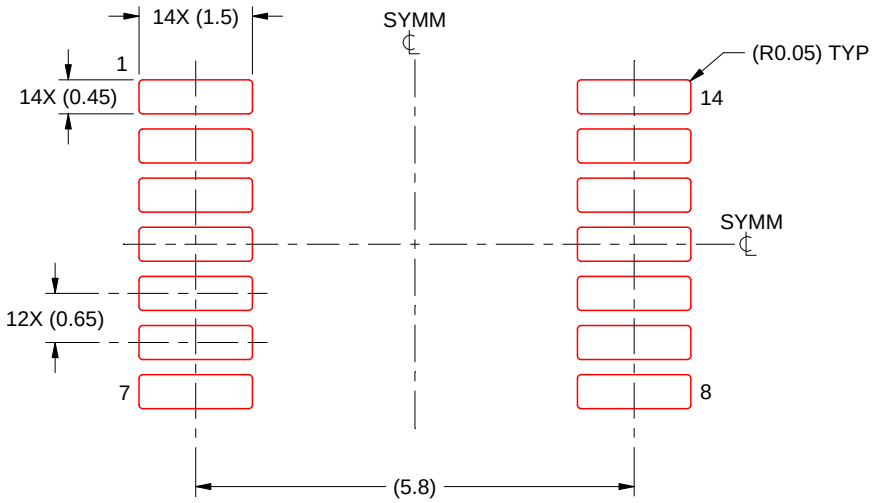

SOLDER PASTE EXAMPLE
BASED ON 0.125 mm THICK STENCIL
SCALE: 10X

4220202/B 12/2023

NOTES: (continued)

8. Laser cutting apertures with trapezoidal walls and rounded corners may offer better paste release. IPC-7525 may have alternate design recommendations.
9. Board assembly site may have different recommendations for stencil design.

GENERIC PACKAGE VIEW

RGY 14

VQFN - 1 mm max height

3.5 x 3.5, 0.5 mm pitch

PLASTIC QUAD FLATPACK - NO LEAD

This image is a representation of the package family, actual package may vary.
Refer to the product data sheet for package details.

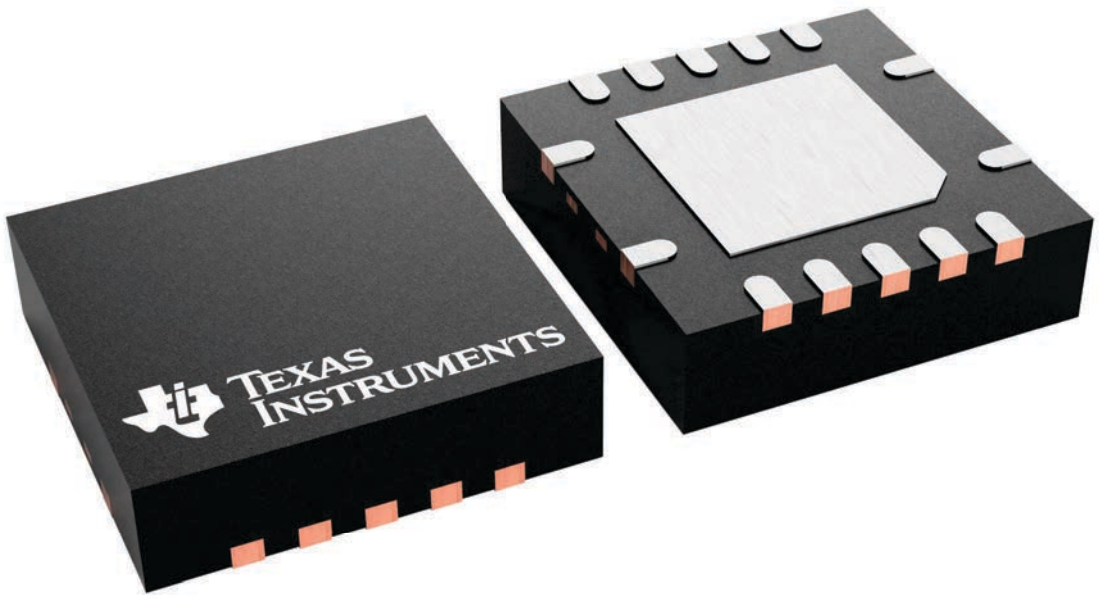

4231541/A

PACKAGE OUTLINE

DYY0014A

SOT-23-THIN - 1.1 mm max height

PLASTIC SMALL OUTLINE

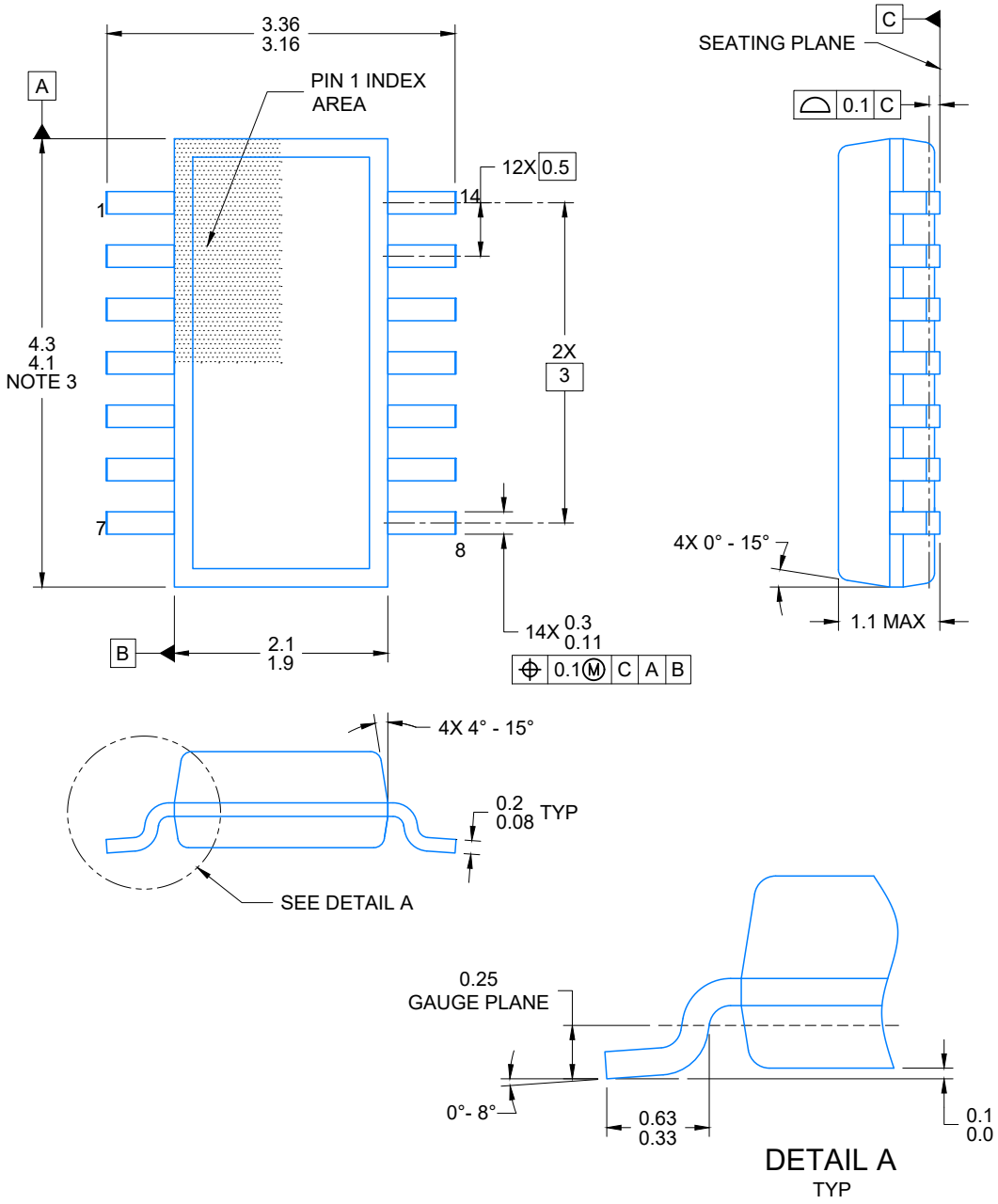

NOTES:

1. All linear dimensions are in millimeters. Any dimensions in parenthesis are for reference only. Dimensioning and tolerancing per ASME Y14.5M.
2. This drawing is subject to change without notice.
3. This dimension does not include mold flash, protrusions, or gate burrs. Mold flash, protrusions, or gate burrs shall not exceed 0.15 per side.
4. This dimension does not include interlead flash. Interlead flash shall not exceed 0.50 per side.
5. Reference JEDEC Registration MO-345, Variation AB

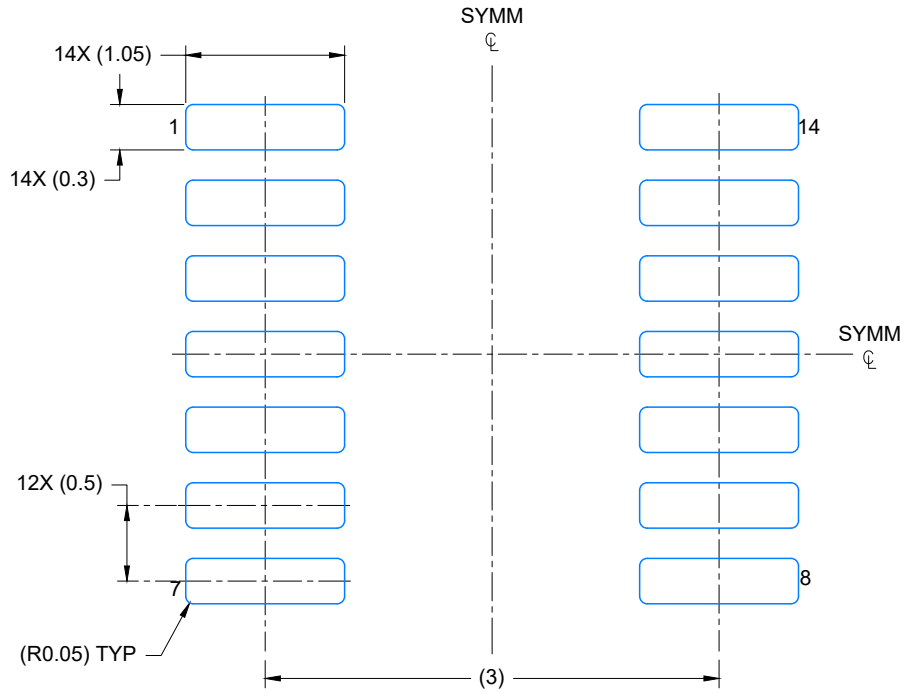

LAND PATTERN EXAMPLE
EXPOSED METAL SHOWN
SCALE: 20X

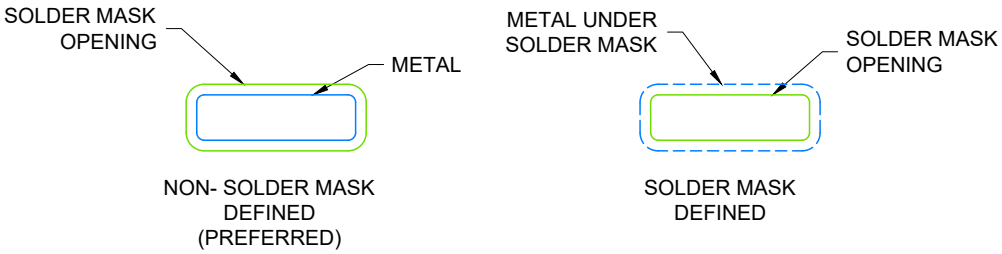

SOLDER MASK DETAILS

4224643/D 07/2024

NOTES: (continued)

6. Publication IPC-7351 may have alternate designs.
7. Solder mask tolerances between and around signal pads can vary based on board fabrication site.

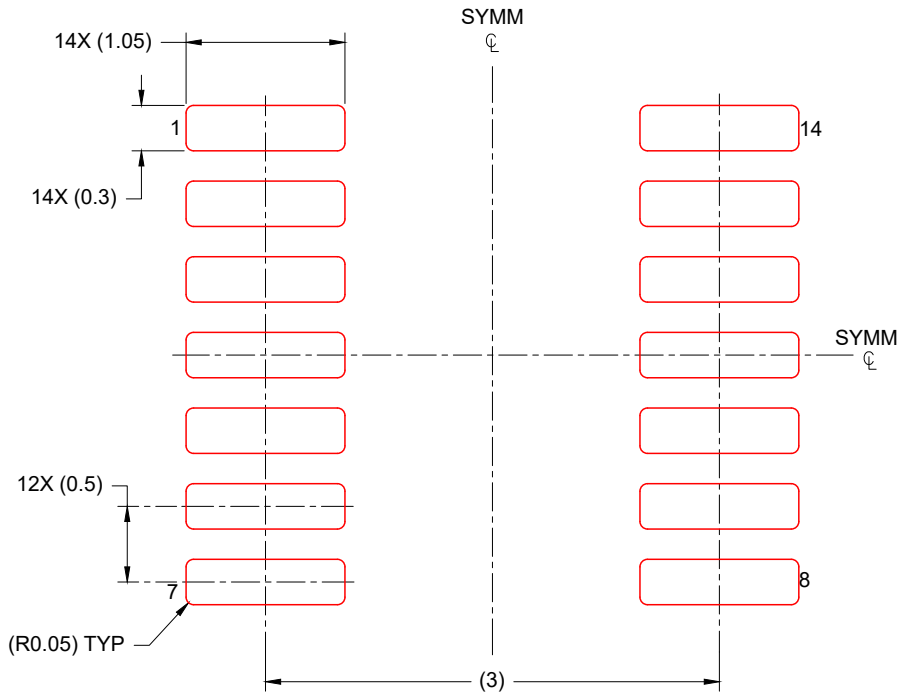

SOLDER PASTE EXAMPLE
BASED ON 0.125 mm THICK STENCIL
SCALE: 20X

4224643/D 07/2024

NOTES: (continued)

8. Laser cutting apertures with trapezoidal walls and rounded corners may offer better paste release. IPC-7525 may have alternate design recommendations.
9. Board assembly site may have different recommendations for stencil design.

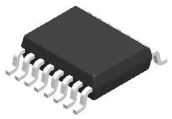

PACKAGE OUTLINE

DBQ0016A

SSOP - 1.75 mm max height

SHRINK SMALL-OUTLINE PACKAGE

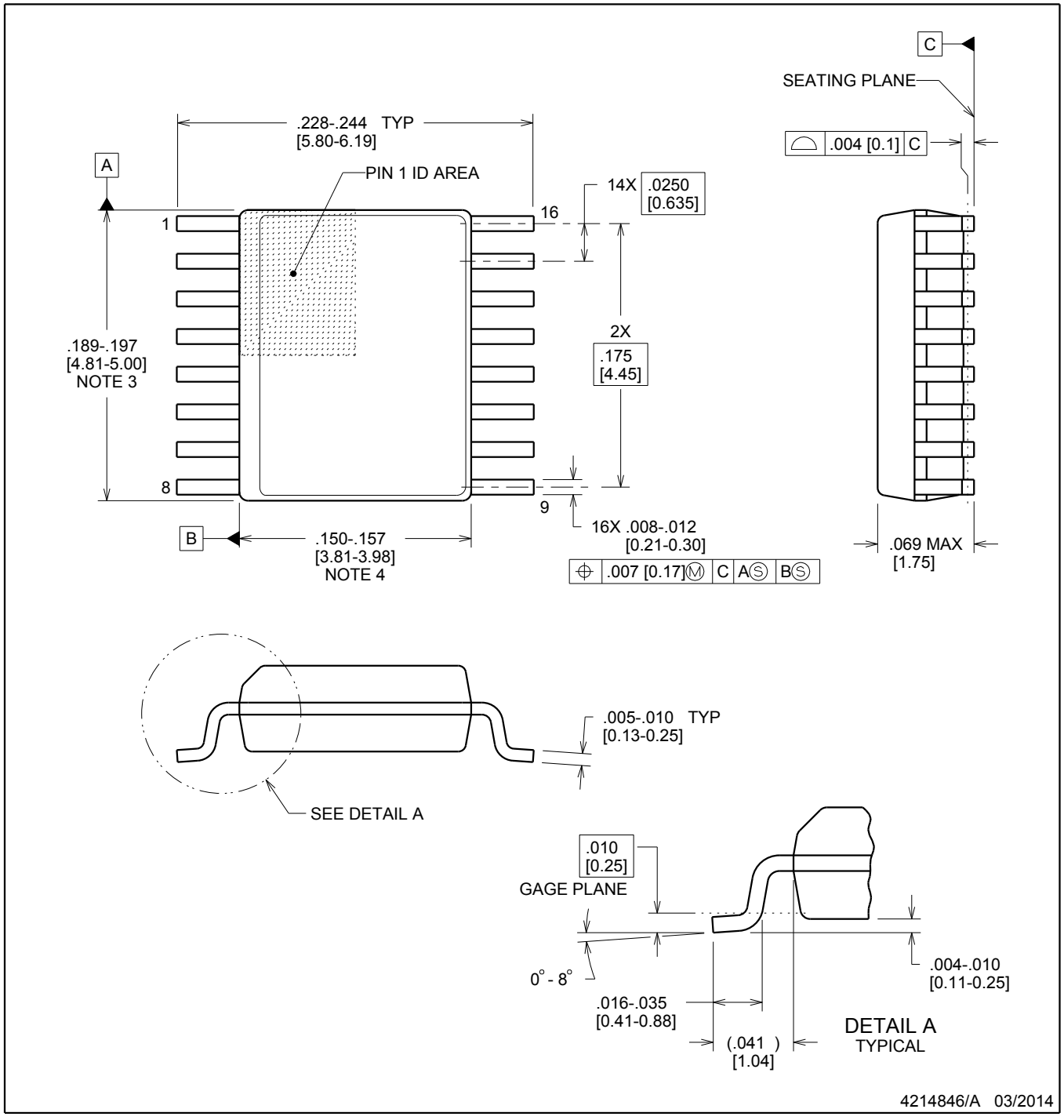

NOTES:

1. Linear dimensions are in inches [millimeters]. Dimensions in parenthesis are for reference only. Controlling dimensions are in inches. Dimensioning and tolerancing per ASME Y14.5M.
2. This drawing is subject to change without notice.
3. This dimension does not include mold flash, protrusions, or gate burrs. Mold flash, protrusions, or gate burrs shall not exceed .006 inch, per side.
4. This dimension does not include interlead flash.
5. Reference JEDEC registration MO-137, variation AB.

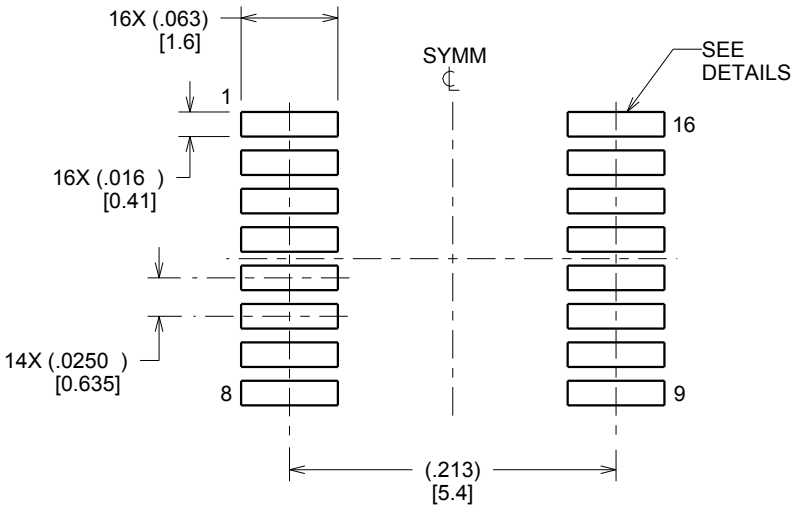

LAND PATTERN EXAMPLE
SCALE:8X

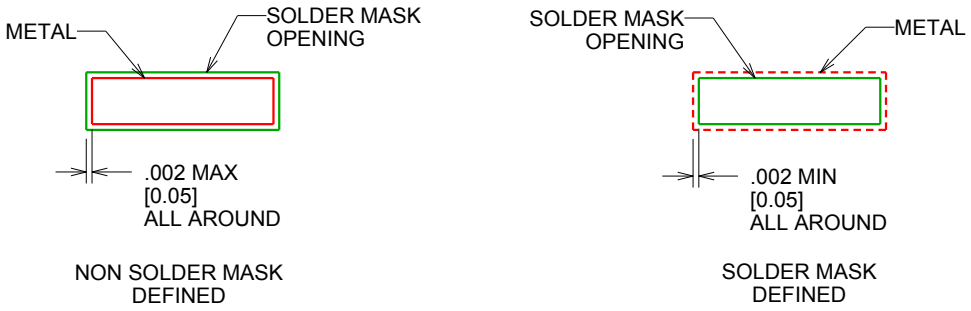

SOLDER MASK DETAILS

4214846/A 03/2014

NOTES: (continued)

6. Publication IPC-7351 may have alternate designs.
7. Solder mask tolerances between and around signal pads can vary based on board fabrication site.

EXAMPLE STENCIL DESIGN

DBQ0016A

SSOP - 1.75 mm max height

SHRINK SMALL-OUTLINE PACKAGE

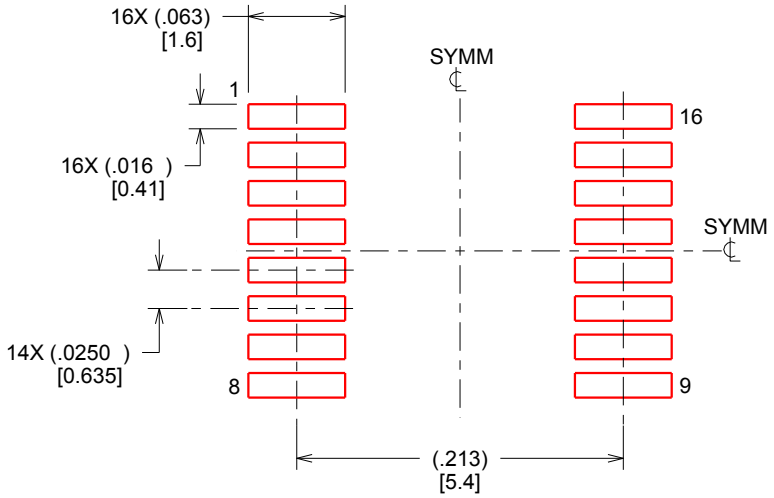

SOLDER PASTE EXAMPLE
BASED ON .005 INCH [0.127 MM] THICK STENCIL
SCALE:8X

4214846/A 03/2014

NOTES: (continued)

8. Laser cutting apertures with trapezoidal walls and rounded corners may offer better paste release. IPC-7525 may have alternate design recommendations.
9. Board assembly site may have different recommendations for stencil design.

IMPORTANT NOTICE AND DISCLAIMER

TI PROVIDES TECHNICAL AND RELIABILITY DATA (INCLUDING DATASHEETS), DESIGN RESOURCES (INCLUDING REFERENCE DESIGNS), APPLICATION OR OTHER DESIGN ADVICE, WEB TOOLS, SAFETY INFORMATION, AND OTHER RESOURCES “AS IS” AND WITH ALL FAULTS, AND DISCLAIMS ALL WARRANTIES, EXPRESS AND IMPLIED, INCLUDING WITHOUT LIMITATION ANY IMPLIED WARRANTIES OF MERCHANTABILITY, FITNESS FOR A PARTICULAR PURPOSE OR NON-INFRINGEMENT OF THIRD PARTY INTELLECTUAL PROPERTY RIGHTS.

These resources are intended for skilled developers designing with TI products. You are solely responsible for (1) selecting the appropriate TI products for your application, (2) designing, validating and testing your application, and (3) ensuring your application meets applicable standards, and any other safety, security, regulatory or other requirements.

These resources are subject to change without notice. TI grants you permission to use these resources only for development of an application that uses the TI products described in the resource. Other reproduction and display of these resources is prohibited. No license is granted to any other TI intellectual property right or to any third party intellectual property right. TI disclaims responsibility for, and you fully indemnify TI and its representatives against any claims, damages, costs, losses, and liabilities arising out of your use of these resources.

TI’s products are provided subject to TI’s Terms of Sale, TI’s General Quality Guidelines, or other applicable terms available either on ti.com or provided in conjunction with such TI products. TI’s provision of these resources does not expand or otherwise alter TI’s applicable warranties or warranty disclaimers for TI products. Unless TI explicitly designates a product as custom or customer-specified, TI products are standard, catalog, general purpose devices.

TI objects to and rejects any additional or different terms you may propose.

Copyright © 2026, Texas Instruments Incorporated

Last updated 10/2025