SN74CBTLV3245A Low-Voltage Octal FET Bus Switch

1 Features

- Standard '245-type pinout
- 5Ω switch connection between two ports
- Rail-to-rail switching on data I/O ports
- I_{off} supports partial-power-down mode operation
- Latch-up performance exceeds 250 mA per JESD 17
- ESD protection exceeds JESD 22
  - 2000V Human-Body Model (A114-A)

Applications

- Datacenter and enterprise computing
- Broadband fixed line access
- Building automation
- Wired networking
- Motor drives

2 Description

The SN74CBTLV3245A device provides 8 bits of high-speed bus switching in a standard '245 device pinout. The low on-state resistance of the switch allows connections to be made with minimal propagation delay.

The device is organized as one 8-bit switch. When output enable ($\overline{OE}$) is low, the 8-bit bus switch is on, and port A is connected to port B. When $\overline{OE}$ is high, the switch is open, and the high-impedance state exists between the two ports.

This device is fully specified for partial-power-down applications using I_{off}. The I_{off} feature maintains that damaging current does not backflow through the device when the device is powered down. The device has isolation during power off.

To maintain the high-impedance state during power up or power down, $\overline{OE}$ must be tied to V_{CC} through a pullup resistor; the minimum value of the resistor is determined by the current-sinking capability of the driver.

Package Information (1)

PART NUMBER	PACKAGE	PACKAGE SIZE(2)
SN74CBTLV3245A	DBQ (SSOP, 20)	8.65mm × 3.90mm
	PW (TSSOP, 20)	6.50mm × 4.40mm
	RGY (VQFN, 20)	4.50mm × 3.50mm
	DW(SOIC, 20)	12.80mm × 7.50mm
	DGV(TVSOP, 20)	5.00mm × 4.40mm
	DGS(VSSOP, 20)	5.10mm × 3.00mm
	RKS(VQFN, 20)	4.50mm × 2.50mm

(1) For all available packages, see the orderable addendum at the end of the data sheet.
(2) The package size (length × width) is a nominal value and includes pins, where applicable.

An IMPORTANT NOTICE at the end of this data sheet addresses availability, warranty, changes, use in safety-critical applications, intellectual property matters and other important disclaimers. PRODUCTION DATA.

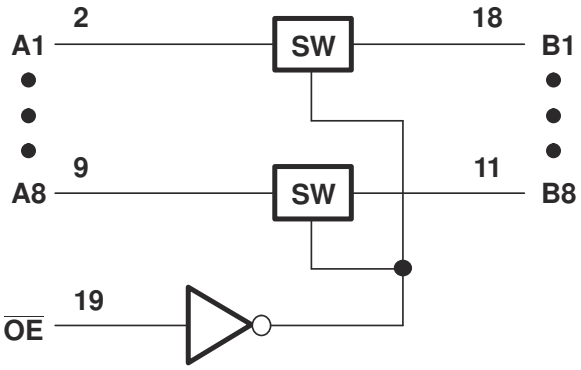

Logic Diagram (Positive Logic)

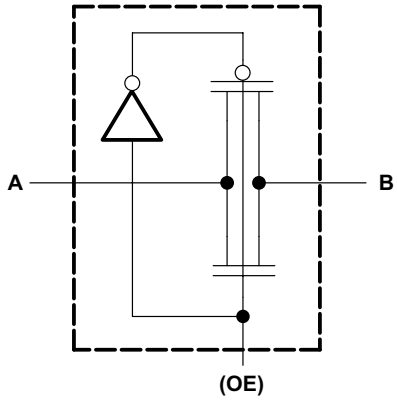

Simplified Schematic, Each FET Switch

Copyright © 2026 Texas Instruments Incorporated

Table of Contents

1 Features....1
Applications....1
2 Description....1
3 Pin Configuration and Functions....4
4 Specifications....6
4.1 Absolute Maximum Ratings....6
4.2 ESD Ratings....6
4.3 Thermal Information....6
4.4 Recommended Operating Conditions....6
4.5 Electrical Characteristics - DBQ, DGV, DW, PW and RGY only....7
4.6 Electrical Characteristics - RKS and DGS Package only....7
4.7 Switching Characteristics - DBQ, DGV, DW, PW and RGY only....8
4.8 Switching Characteristics - RKS and DGS Package only....8
4.9 Typical Characteristics....8
5 Parameter Measurement Information....9
6 Detailed Description....10
6.1 Overview....10
6.2 Functional Block Diagram....10
6.3 Feature Description....10
6.4 Device Functional Modes....10
7 Application and Implementation....11
7.1 Application Information....11
7.2 Typical Application....11
7.3 Power Supply Recommendations....11
7.4 Layout....12
8 Device and Documentation Support....13
8.1 Receiving Notification of Documentation Updates....13
8.2 Support Resources....13
8.3 Trademarks....13
8.4 Electrostatic Discharge Caution....13
8.5 Glossary....13
9 Revision History....13
10 Mechanical, Packaging, and Orderable Information....13
10.1 Mechanical Data....13

Copyright © 2026 Texas Instruments Incorporated

3 Pin Configuration and Functions

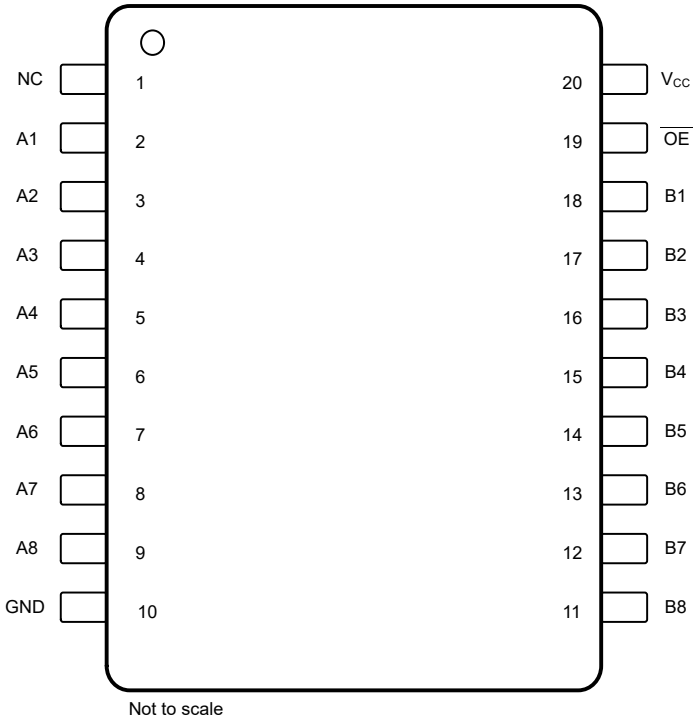

Figure 3-1. DBQ, DGV, DW, DGS and PW Package 20-Pin SSOP, TVSOP, SOIC, VSSOP and TSSOP (Top View)

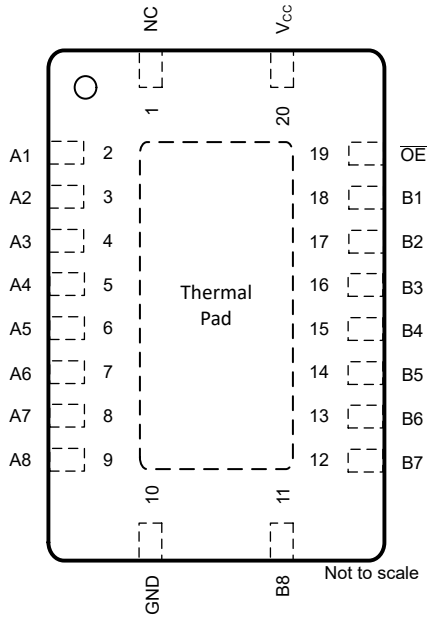

Figure 3-2. RGY, RKS Package 20-Pin VQFN (Top View)

Copyright © 2026 Texas Instruments Incorporated

Table 3-1. Pin Functions

PIN		TYPE[1]	DESCRIPTION
NAME	NO.		
NC	1	I/O	No internal connection. Can be shorted to GND or left floating
A1	2	I/O	Input/output pin
A2	3	I/O	Input/output pin
A3	4	I/O	Input/output pin
A4	5	I/O	Input/output pin
A5	6	I/O	Input/output pin
A6	7	I/O	Input/output pin
A7	8	I/O	Input/output pin
A8	9	I/O	Input/output pin
GND	10	GND	Ground pin
B8	11	I/O	Input/output pin
B7	12	I/O	Input/output pin
B6	13	I/O	Input/output pin
B5	14	I/O	Input/output pin
B4	15	I/O	Input/output pin
B3	16	I/O	Input/output pin
B2	17	I/O	Input/output pin
B1	18	I/O	Input/output pin
$\overline{OE}$	19	I	Output Enable, active low
V_{CC}	20	PWR	Voltage Supply pin

(1) I = Input, O = Output, PWR = Power

Copyright © 2026 Texas Instruments Incorporated

4 Specifications

4.1 Absolute Maximum Ratings

over operating free-air temperature range (unless otherwise noted)(1)

			MIN	MAX	UNIT
V_{CC}	Supply voltage range		–0.5	4.6	V
V_I	Input voltage range(2)		–0.5	4.6	V
	Continuous channel current			128	mA
I_{IK}	Input clamp current	$V_{I/O} < 0$		–50	mA
T_{stg}	Storage temperature range		-65	150	°C

(1) Operation outside the *Absolute Maximum Ratings* may cause permanent device damage. *Absolute Maximum Ratings* do not imply functional operation of the device at these or any other conditions beyond those listed under *Recommended Operating Conditions*. If used outside the *Recommended Operating Conditions* but within the *Absolute Maximum Ratings*, the device may not be fully functional, and this may affect device reliability, functionality, performance, and shorten the device lifetime.
(2) The input and output negative-voltage ratings can be exceeded if the input and output clamp-current ratings are observed.

4.2 ESD Ratings

			VALUE	UNIT
$V_{(ESD)}$	Electrostatic discharge	Human-body model (HBM), per ANSI/ESDA/JEDEC JS-001(1)	±2000	V

(1) JEDEC document JEP155 states that 500V HBM allows safe manufacturing with a standard ESD control process.

4.3 Thermal Information

		SN74CBTLV3245A							
		PW(TSSOP)	RKS(VQFN)	DGS(VSSOP)	DBQ(SSOP)	RGY(VQFN)	DW(SOIC)	DGV(TVSOP)	
THERMAL METRIC[1]		20 Pins	20 Pins	20 Pins	20 Pins	20 Pins	20 Pins	20 Pins	UNIT
$R_{\theta JA}$	Junction-to-ambient thermal resistance	105.9	71.8	120.5	100.9	80.8	58	92	°C/W

4.4 Recommended Operating Conditions

over operating free-air temperature range (unless otherwise noted)(1)

			MIN	MAX	UNIT
V_{CC}	Supply voltage		2.3	3.6	V
V_{IH}	High-level control input voltage	V_{CC} = 2.3V to 2.7V	1.7		V
		V_{CC} = 2.7V to 3.6V	2		
V_{IL}	Low-level control input voltage	V_{CC} = 2.3V to 2.7V		0.7	V
		V_{CC} = 2.7V to 3.6V		0.8	
T_A	Operating free-air temperature	PKG = DBQ, DGV, DW, PW, RGY	–40	85	°C
T_A	Operating free-air temperature	PKG = RKS, DGS	-40	125	°C

(1) All unused control inputs of the device must be held at V_{CC} or GND to maintain proper device operation. Refer to the TI application note, *Implications of Slow or Floating CMOS Inputs*, literature number SCBA004.

Copyright © 2026 Texas Instruments Incorporated

4.5 Electrical Characteristics - DBQ, DGV, DW, PW and RGY only

over recommended operating free-air temperature range -40 to 85 °C(unless otherwise noted)

PARAMETER		TEST CONDITIONS			MIN	TYP(1)	MAX	UNIT
V_{IK}	Control inputs	V_{CC} = 3 V,	I_I = –18 mA				–1.2	V
	Data inputs						–0.8	
I_I		V_{CC} = 3.6 V,	V_I = V_{CC} or GND				±60	µA
I_{off}		V_{CC} = 0,	V_I or V_O = 0 to 3.6 V				40	µA
I_{CC}		V_{CC} = 3.6 V,	I_O = 0,	V_I = V_{CC} or GND			20	µA
ΔI_{CC} (2)	Control inputs	V_{CC} = 3.6 V,	One input at 3 V,	Other inputs at V_{CC} or GND			300	µA
C_i	Control inputs	V_I = 3 V or 0				4		pF
$C_{io(OFF)}$		V_O = 3 V or 0,	$\overline{OE}$ = V_{CC}			9		pF
r_{on} (3)		V_{CC} = 2.3 V, TYP at V_{CC} = 2.5 V	V_I = 0	I_O = 64 mA		5	8	Ω
				I_O = 24 mA		5	8	
			V_I = 1.7 V,	I_O = 15 mA		27	40	
		V_{CC} = 3 V	V_I = 0	I_O = 64 mA		5	7	
				I_O = 24 mA		5	7	
			V_I = 2.4 V,	I_O = 15 mA		10	15	

(1) All typical values are at V_{CC} = 3.3 V (unless otherwise noted), T_A = 25°C.
(2) This is the increase in supply current for each input that is at the specified voltage level, rather than V_{CC} or GND.
(3) Measured by the voltage drop between the A and B terminals at the indicated current through the switch. On-state resistance is determined by the lower of the voltages of the two (A or B) terminals.

4.6 Electrical Characteristics - RKS and DGS Package only

over recommended operating free-air temperature range -40 to 125 °C((unless otherwise noted)

PARAMETER		TEST CONDITIONS			MIN	TYP(1)	MAX	UNIT
V_{IK}	Control inputs	V_{CC} = 3V,	I_I = –18 mA				–1.2	V
	Data inputs						–0.8	
I_I		V_{CC} = 3.6V,	V_I = V_{CC} or GND				±60	µA
I_{off}		V_{CC} = 0,	V_I or V_O = 0 to 3.6V				40	µA
I_{CC}		V_{CC} = 3.6V,	I_O = 0,	V_I = V_{CC} or GND			20	µA
ΔI_{CC} (2)	Control inputs	V_{CC} = 3.6V,	One input at 3V,	Other inputs at V_{CC} or GND			300	µA
C_i	Control inputs	V_I = 3V or 0				4		pF
$C_{io(OFF)}$		V_O = 3V or 0,	$\overline{OE}$ = V_{CC}			9		pF
r_{on} (3)		V_{CC} = 2.3V, TYP at V_{CC} = 2.5V	V_I = 0	I_O = 64mA		5	10	Ω
				I_O = 24mA		5	10	
			V_I = 1.7V,	I_O = 15 mA		27	40	
		V_{CC} = 3V	V_I = 0	I_O = 64mA		5	9	
				I_O = 24mA		5	9	
			V_I = 2.4V,	I_O = 15mA		10	20	

Copyright © 2026 Texas Instruments Incorporated

4.7 Switching Characteristics - DBQ, DGV, DW, PW and RGY only

over recommended operating free-air temperature range -40 to 85 °C((unless otherwise noted)

PARAMETER	FROM (INPUT)	TO (OUTPUT)	V_{CC} = 2.5V ± 0.2V		V_{CC} = 3.3V ± 0.3V		UNIT
			MIN	MAX	MIN	MAX	
t_{pd} (1)	A or B	B or A		0.15		0.25	ns
t_{en}	$\overline{OE}$	A or B	1	6	1	4.7	ns
t_{dis}	$\overline{OE}$	A or B	1	6.1	1	6.4	ns

(1) The propagation delay is the calculated RC time constant of the typical on-state resistance of the switch and the specified load capacitance, when driven by an archetypal voltage source (zero output impedance).

4.8 Switching Characteristics - RKS and DGS Package only

over recommended operating free-air temperature range -40 to 125 °C((unless otherwise noted)

PARAMETER	FROM (INPUT)	TO (OUTPUT)	V_{CC} = 2.5 V ± 0.2 V		V_{CC} = 3.3 V ± 0.3 V		UNIT
			MIN	MAX	MIN	MAX	
t_{pd} (1)	A or B	B or A		0.15		0.25	ns
t_{en}	$\overline{OE}$	A or B	1	8.5	1	7.8	ns
t_{dis}	$\overline{OE}$	A or B	1	6.8	1	5.8	ns

4.9 Typical Characteristics

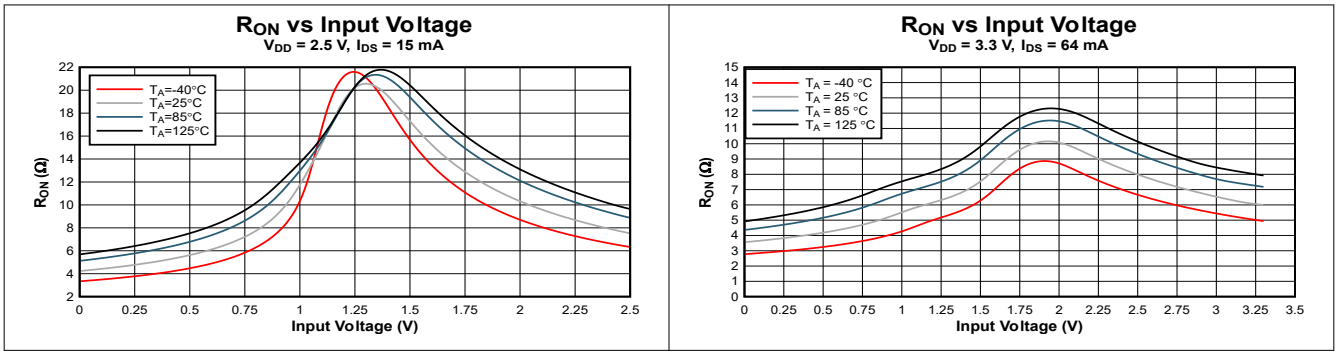

Copyright © 2026 Texas Instruments Incorporated

5 Parameter Measurement Information

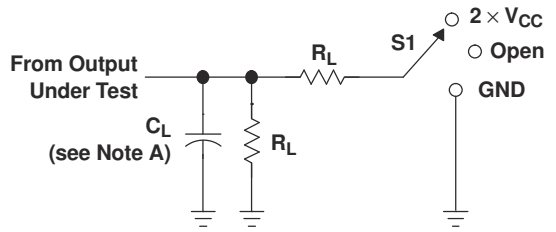

LOAD CIRCUIT

TEST	S1
t_{PLH}/t_{PHL}	Open
t_{PLZ}/t_{PZL}	$2 \times V_{CC}$
t_{PHZ}/t_{PZH}	GND

V_{CC}	C_L	R_L	V_Δ
2.5 V ±0.2 V	30 pF	500 Ω	0.15 V
3.3 V ±0.3 V	50 pF	500 Ω	0.3 V

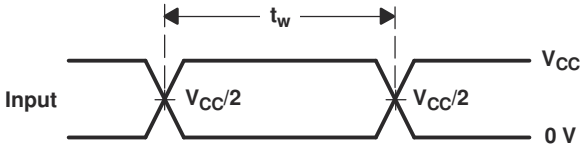

VOLTAGE WAVEFORMS
PULSE DURATION

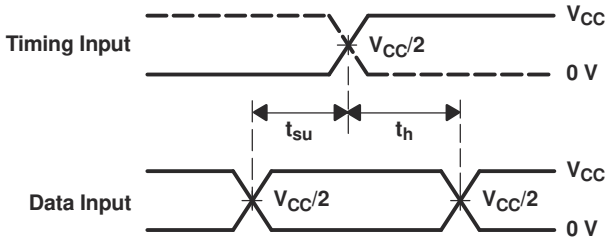

VOLTAGE WAVEFORMS
SETUP AND HOLD TIMES

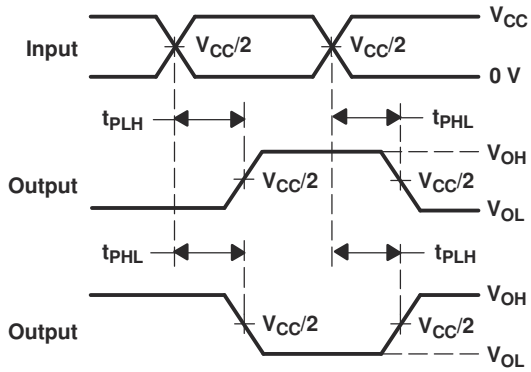

VOLTAGE WAVEFORMS
PROPAGATION DELAY TIMES
INVERTING AND NONINVERTING OUTPUTS

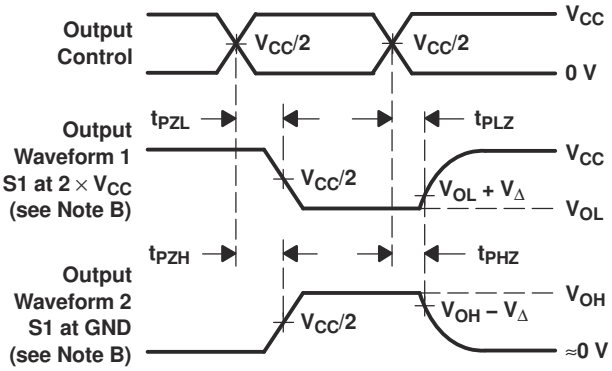

VOLTAGE WAVEFORMS
ENABLE AND DISABLE TIMES
LOW- AND HIGH-LEVEL ENABLING

NOTES:
A. C_L includes probe and jig capacitance.
B. Waveform 1 is for an output with internal conditions such that the output is low except when disabled by the output control. Waveform 2 is for an output with internal conditions such that the output is high except when disabled by the output control.
C. All input pulses are supplied by generators having the following characteristics: PRR ≤ 10 MHz, Z_O = 50 Ω, $t_r \le 2$ ns, $t_f \le 2$ ns.
D. The outputs are measured one at a time with one transition per measurement.
E. t_{PLZ} and t_{PHZ} are the same as t_{dis}.
F. t_{PZL} and t_{PZH} are the same as t_{en}.
G. t_{PLH} and t_{PHL} are the same as t_{pd}.
H. All parameters and waveforms are not applicable to all devices.

Figure 5-1. Load Circuit and Voltage Waveforms

Copyright © 2026 Texas Instruments Incorporated

6 Detailed Description

6.1 Overview

6.2 Functional Block Diagram

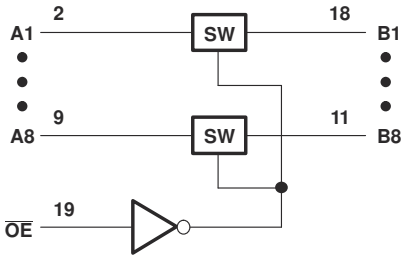

Figure 6-1. Logic Diagram (Positive Logic)

6.3 Feature Description

6.4 Device Functional Modes

Function Table

INPUT $\overline{OE}$	FUNCTION
L	A port = B port
H	Disconnect

Copyright © 2026 Texas Instruments Incorporated

7 Application and Implementation

Note

Information in the following applications sections is not part of the TI component specification, and TI does not warrant its accuracy or completeness. TI's customers are responsible for determining suitability of components for their purposes, as well as validating and testing their design implementation to confirm system functionality.

7.1 Application Information

The SN74CBTLV3245A can be used to switch a signal path. The switch is bidirectional, so the A and B pins can be used as either inputs or outputs. This switch is typically used when there is one signal path that needs to be isolated at certain times.

(1)

7.2 Typical Application

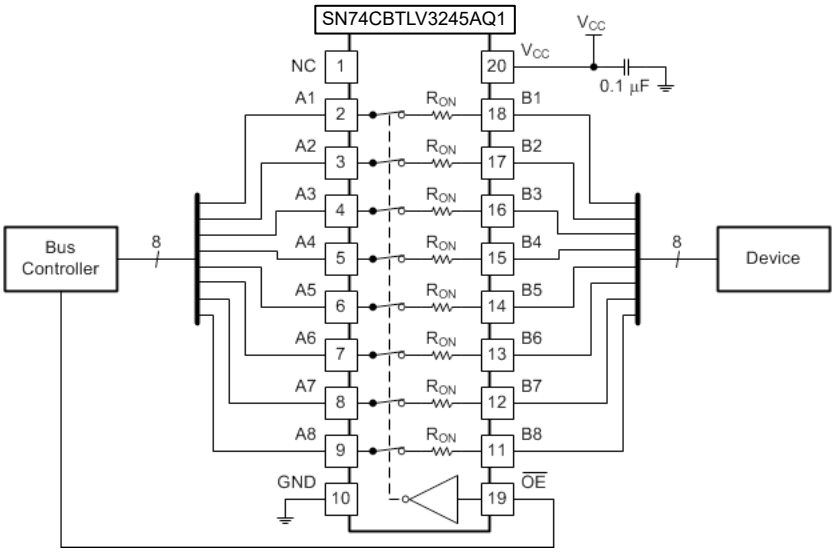

Figure 7-1. Typical Application Schematic

7.2.1 Design Requirements

The SN74CBTLV3245A device can be properly operated without any external components. TI recommends pulling up the digital control pin (OE) to VCC or pulling down to GND to avoid undesired switch positions that can result from the floating pin. A floating digital pin can cause excess current consumption refer to Implications of Slow or Floating CMOS Inputs.

7.2.2 Detailed Design Procedure

When $\overline{OE}$ is high, the active bus. This means that there is a low impedance path between the A and B pins. The 0.1µF capacitor on VCC is a decoupling capacitor and must be placed as close as possible to the device.

7.3 Power Supply Recommendations

The power supply can be any voltage between the minimum and maximum supply voltage rating listed in the Section 4.4 table.

Each V_{CC} terminal must have a good bypass capacitor to prevent power disturbance. For devices with a single supply, a 0.1µF bypass capacitor is recommended. If multiple pins are labeled V_{CC}, then a 0.01µF or

Copyright © 2026 Texas Instruments Incorporated

0.022µF capacitor is recommended for each V_{CC} because the V_{CC} pins are tied together internally. For devices with dual-supply pins operating at different voltages, for example V_{CC} and V_{DD}, a 0.1µF bypass capacitor is recommended for each supply pin. To reject different frequencies of noise, use multiple bypass capacitors in parallel. Capacitors with values of 0.1µF and 1µF are commonly used in parallel. The bypass capacitor must be installed as close to the power terminal as possible for best results.

7.4 Layout

7.4.1 Layout Guidelines

Reflections and matching are closely related to the loop antenna theory but are different enough to be discussed separately from the theory. When a PCB trace turns a corner at a 90° angle, a reflection can occur. A reflection occurs primarily because of the change of width of the trace. At the apex of the turn, the trace width increases to 1.414 times the width. This increase upsets the transmission-line characteristics, especially the distributed capacitance and self–inductance of the trace which results in the reflection. Not all PCB traces can be straight and therefore some traces must turn corners. Figure 7-2 shows progressively better techniques of rounding corners. Only the last example (BEST) maintains constant trace width and minimizes reflections.

7.4.2 Layout Example

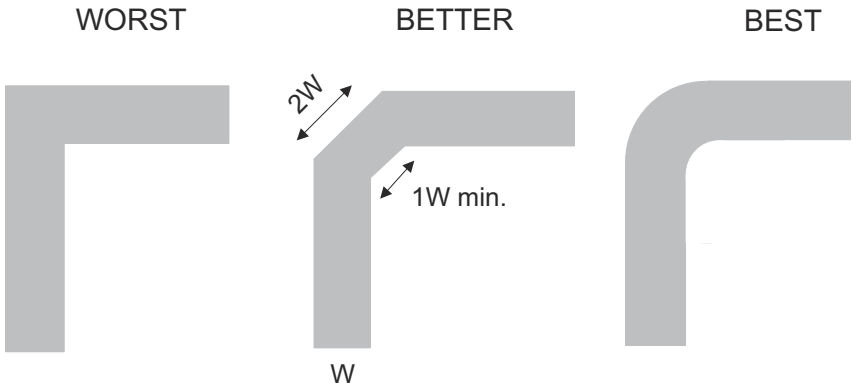

Figure 7-2. Trace Example

Copyright © 2026 Texas Instruments Incorporated

8 Device and Documentation Support

8.1 Receiving Notification of Documentation Updates

To receive notification of documentation updates, navigate to the device product folder on ti.com. Click on *Notifications* to register and receive a weekly digest of any product information that has changed. For change details, review the revision history included in any revised document.

8.2 Support Resources

TI E2E™ support forums are an engineer's go-to source for fast, verified answers and design help — straight from the experts. Search existing answers or ask your own question to get the quick design help you need.

Linked content is provided "AS IS" by the respective contributors. They do not constitute TI specifications and do not necessarily reflect TI's views; see TI's Terms of Use.

8.3 Trademarks

TI E2E™ is a trademark of Texas Instruments.
All trademarks are the property of their respective owners.

8.4 Electrostatic Discharge Caution



This integrated circuit can be damaged by ESD. Texas Instruments recommends that all integrated circuits be handled with appropriate precautions. Failure to observe proper handling and installation procedures can cause damage.

ESD damage can range from subtle performance degradation to complete device failure. Precision integrated circuits may be more susceptible to damage because very small parametric changes could cause the device not to meet its published specifications.

8.5 Glossary

TI Glossary	This glossary lists and explains terms, acronyms, and definitions.

9 Revision History

NOTE: Page numbers for previous revisions may differ from page numbers in the current version.

Changes from Revision M (August 2005) to Revision N (May 2026)	Page
• Updated document to new TI data sheet format - no changes to existing specifications.	1
• Removed Ordering Information table.	1
• Added Applications section, Device Information table, Pin Configuration and Functions section, ESD Ratings table, Feature Description section, Device Functional Modes, Application and Implementation section, Power Supply Recommendations section, Layout section, Device and Documentation Support section, and Mechanical, Packaging, and Orderable Information section.	1
• Updated Thermal Ratings.	6
• Added New Packages with 125°C capability.	6
• Added Electrical and Switching Characteristics sections for RKS and DGS packages.	7
• Added Typical Characteristics.	8
• Added Mechanical, Packaging, and Orderable Information section.	13

10 Mechanical, Packaging, and Orderable Information

The following pages include mechanical packaging and orderable information. This information is the most current data available for the designated devices. This data is subject to change without notice and revision of this document. For browser based versions of this data sheet, refer to the left hand navigation.

10.1 Mechanical Data

Copyright © 2026 Texas Instruments Incorporated

PACKAGE OUTLINE

PW0020A



TSSOP - 1.2 mm max height

SMALL OUTLINE PACKAGE

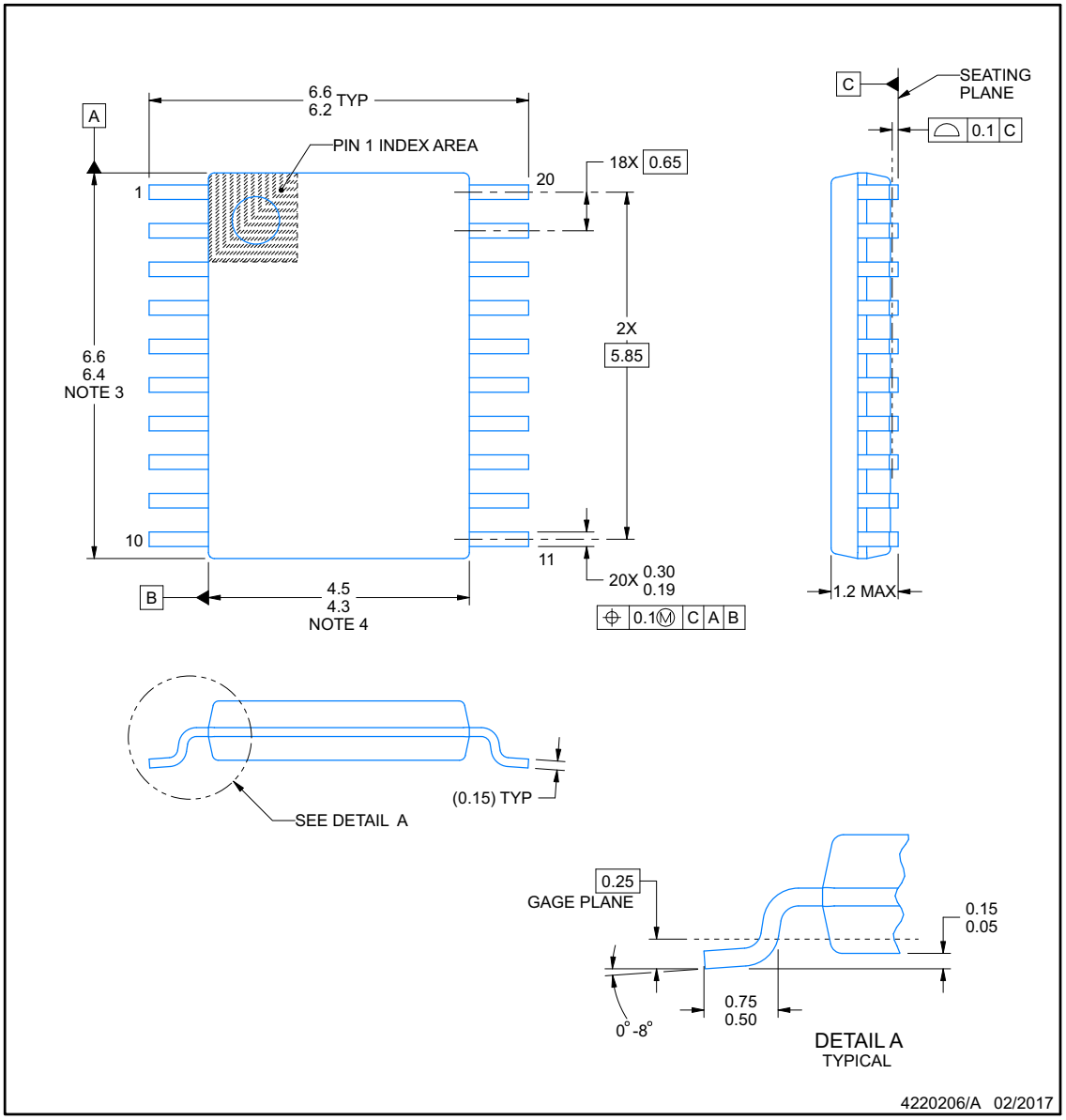

NOTES:

1. All linear dimensions are in millimeters. Any dimensions in parenthesis are for reference only. Dimensioning and tolerancing per ASME Y14.5M.
2. This drawing is subject to change without notice.
3. This dimension does not include mold flash, protrusions, or gate burrs. Mold flash, protrusions, or gate burrs shall not exceed 0.15 mm per side.
4. This dimension does not include interlead flash. Interlead flash shall not exceed 0.25 mm per side.
5. Reference JEDEC registration MO-153.

Copyright © 2026 Texas Instruments Incorporated

EXAMPLE BOARD LAYOUT

PW0020A

TSSOP - 1.2 mm max height

SMALL OUTLINE PACKAGE

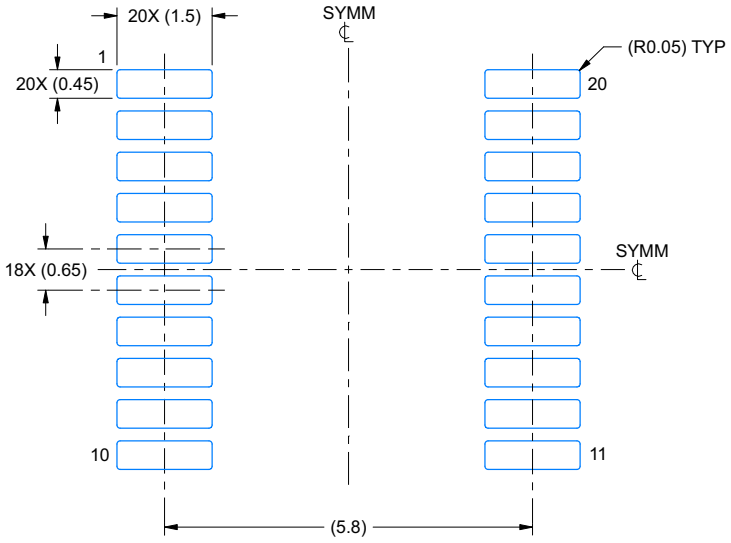

LAND PATTERN EXAMPLE
EXPOSED METAL SHOWN
SCALE: 10X

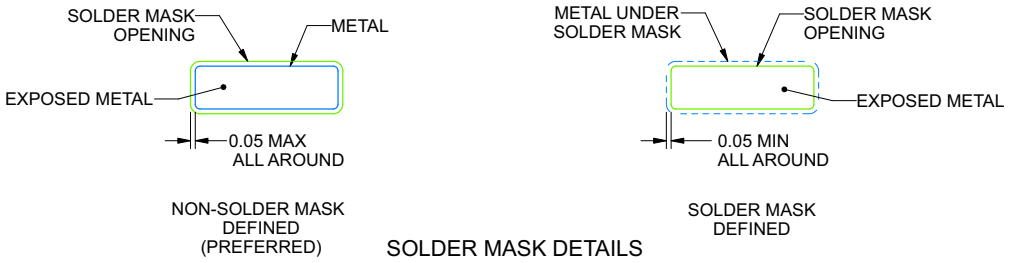

SOLDER MASK DETAILS

4220206/A 02/2017

NOTES: (continued)

6. Publication IPC-7351 may have alternate designs.
7. Solder mask tolerances between and around signal pads can vary based on board fabrication site.

Copyright © 2026 Texas Instruments Incorporated

EXAMPLE STENCIL DESIGN

PW0020A — **TSSOP - 1.2 mm max height**

SMALL OUTLINE PACKAGE

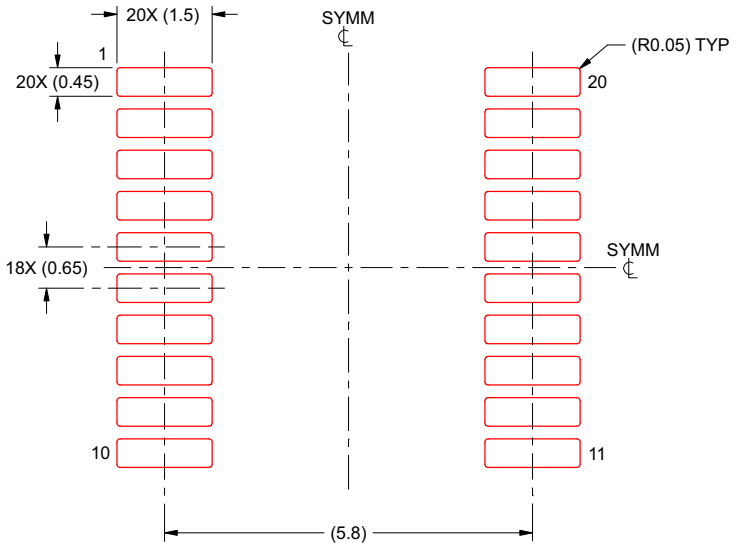

SOLDER PASTE EXAMPLE
BASED ON 0.125 mm THICK STENCIL
SCALE: 10X

4220206/A 02/2017

NOTES: (continued)

8. Laser cutting apertures with trapezoidal walls and rounded corners may offer better paste release. IPC-7525 may have alternate design recommendations.
9. Board assembly site may have different recommendations for stencil design.

Copyright © 2026 Texas Instruments Incorporated

MECHANICAL DATA

DBQ (R–PDSO–G20) PLASTIC SMALL–OUTLINE PACKAGE

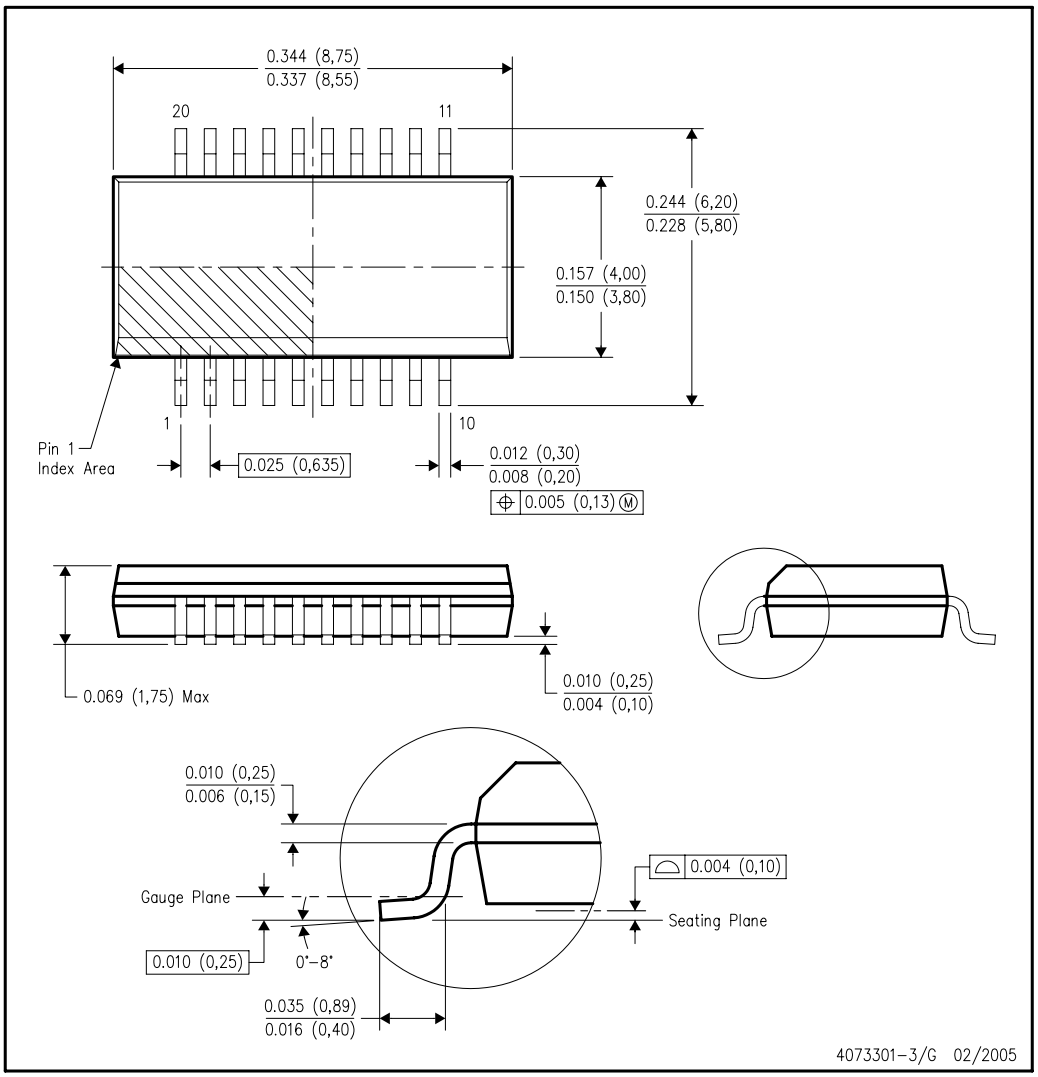

NOTES:
A. All linear dimensions are in inches (millimeters).
B. This drawing is subject to change without notice.
C. Body dimensions do not include mold flash or protrusion not to exceed 0.006 (0,15) per side.
D. Falls within JEDEC MO–137 variation AD.

Copyright © 2026 Texas Instruments Incorporated

RGY0020A



PACKAGE OUTLINE

VQFN - 1 mm max height

PLASTIC QUAD FLATPACK - NO LEAD

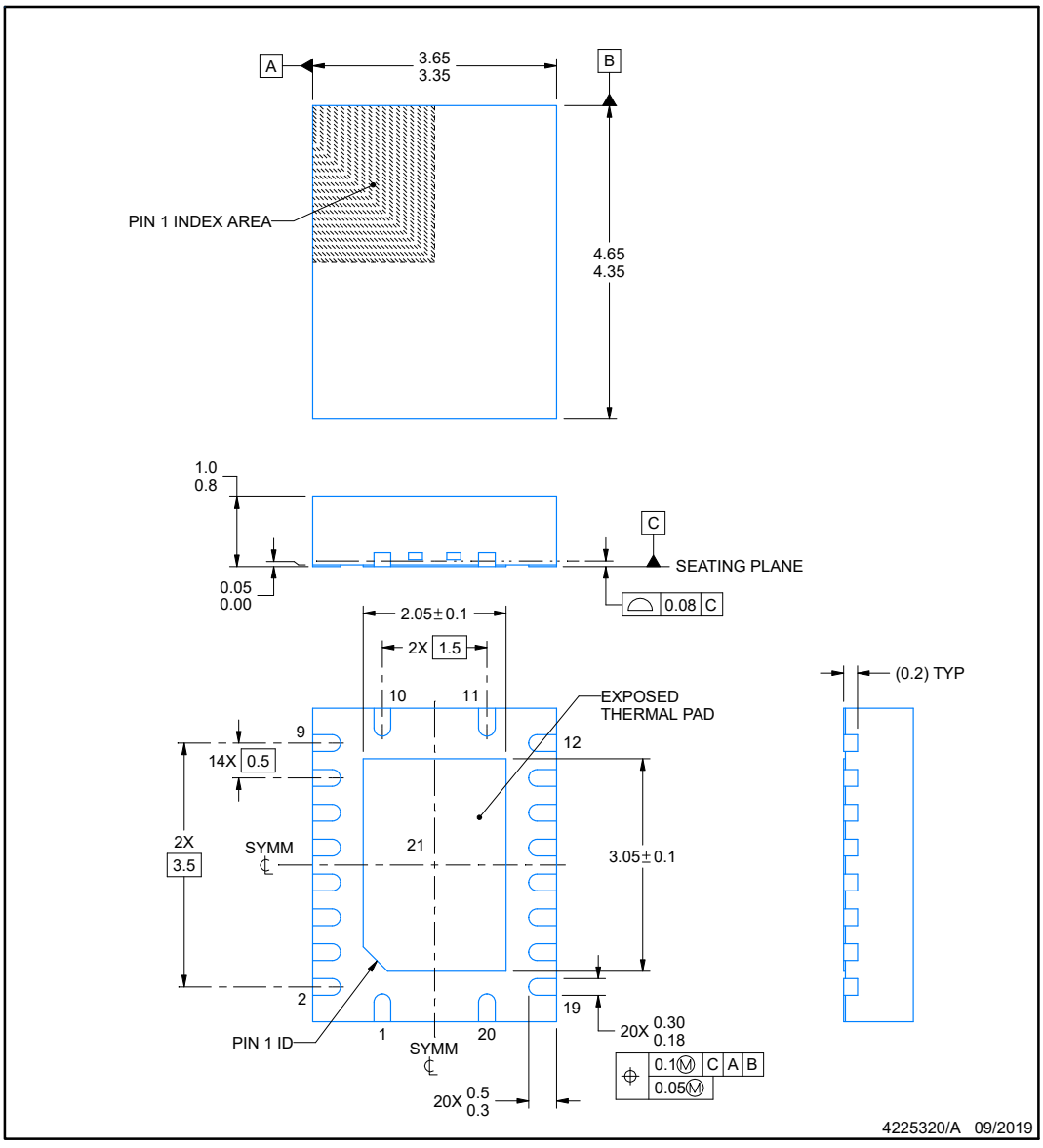

NOTES:

1. All linear dimensions are in millimeters. Any dimensions in parenthesis are for reference only. Dimensioning and tolerancing per ASME Y14.5M.
2. This drawing is subject to change without notice.
3. The package thermal pad must be soldered to the printed circuit board for thermal and mechanical performance.

Copyright © 2026 Texas Instruments Incorporated

EXAMPLE BOARD LAYOUT

RGY0020A — **VQFN - 1 mm max height**

PLASTIC QUAD FLATPACK - NO LEAD

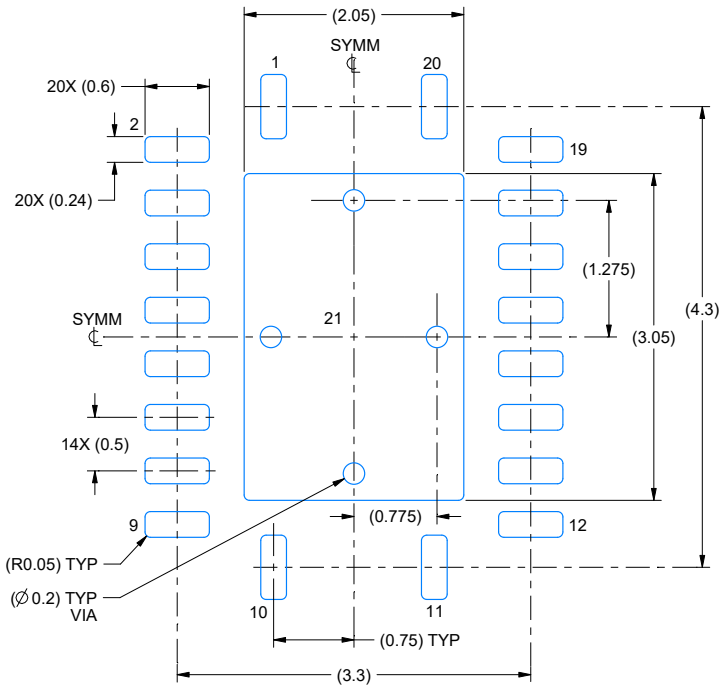

LAND PATTERN EXAMPLE
EXPOSED METAL SHOWN
SCALE:18X

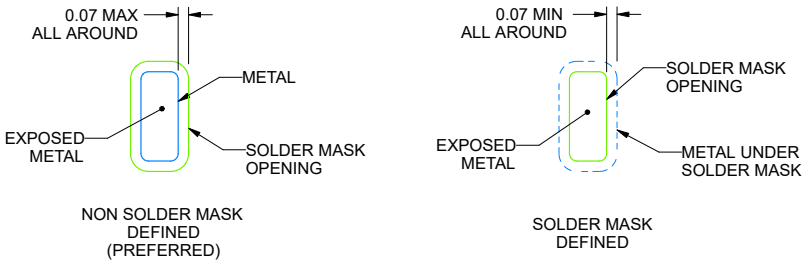

SOLDER MASK DETAILS

4225320/A 09/2019

NOTES: (continued)

4. This package is designed to be soldered to a thermal pad on the board. For more information, see Texas Instruments literature number SLUA271 (www.ti.com/lit/slua271).
5. Vias are optional depending on application, refer to device data sheet. If any vias are implemented, refer to their locations shown on this view. It is recommended that vias under paste be filled, plugged or tented.

Copyright © 2026 Texas Instruments Incorporated

EXAMPLE STENCIL DESIGN

RGY0020A — **VQFN - 1 mm max height**

PLASTIC QUAD FLATPACK - NO LEAD

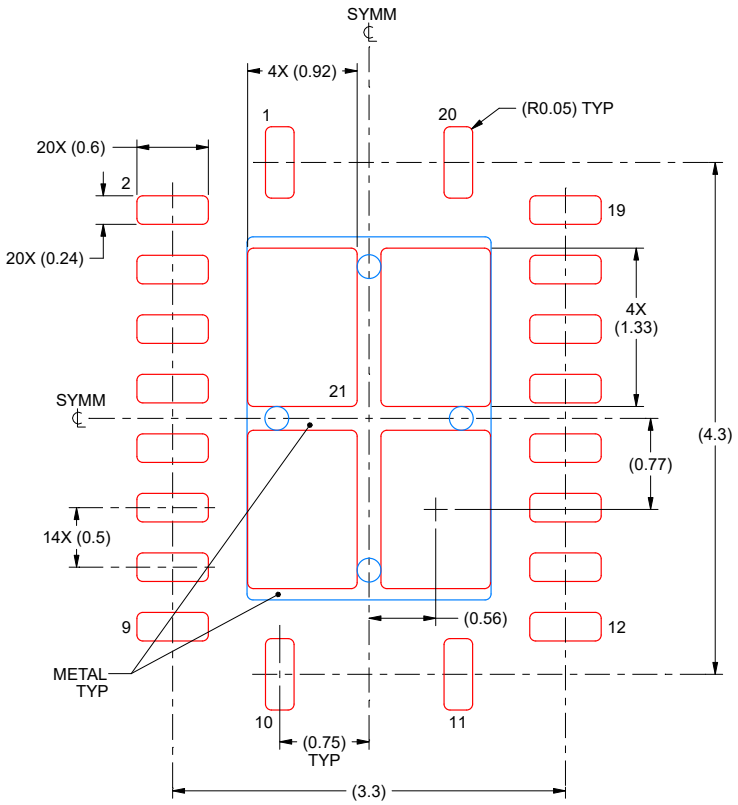

SOLDER PASTE EXAMPLE
BASED ON 0.125 mm THICK STENCIL

EXPOSED PAD 21
78% PRINTED SOLDER COVERAGE BY AREA UNDER PACKAGE
SCALE:20X

4225320/A 09/2019

NOTES: (continued)

6. Laser cutting apertures with trapezoidal walls and rounded corners may offer better paste release. IPC-7525 may have alternate design recommendations.

Copyright © 2026 Texas Instruments Incorporated

PACKAGE OUTLINE

RKS0020C

VQFN - 1 mm max height

PLASTIC QUAD FLATPACK - NO LEAD

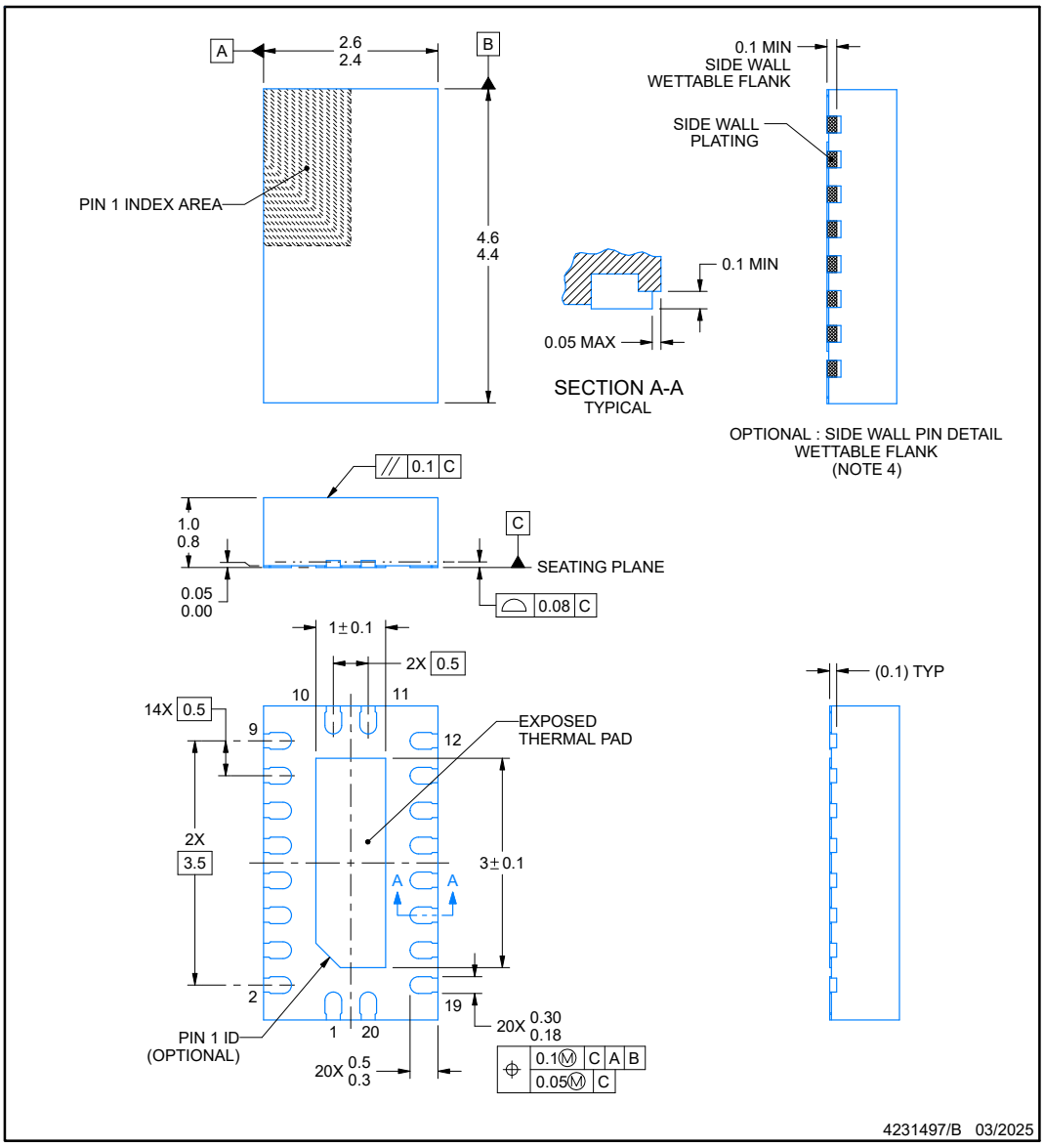

NOTES:

1. All linear dimensions are in millimeters. Any dimensions in parenthesis are for reference only. Dimensioning and tolerancing per ASME Y14.5M.
2. This drawing is subject to change without notice.
3. The package thermal pad must be soldered to the printed circuit board for thermal and mechanical performance.
4. Minimum 0.1mm solder wetting on pins side wall. Available for wettable flank version only

Copyright © 2026 Texas Instruments Incorporated

EXAMPLE BOARD LAYOUT

RKS0020C — **VQFN - 1 mm max height**

PLASTIC QUAD FLATPACK - NO LEAD

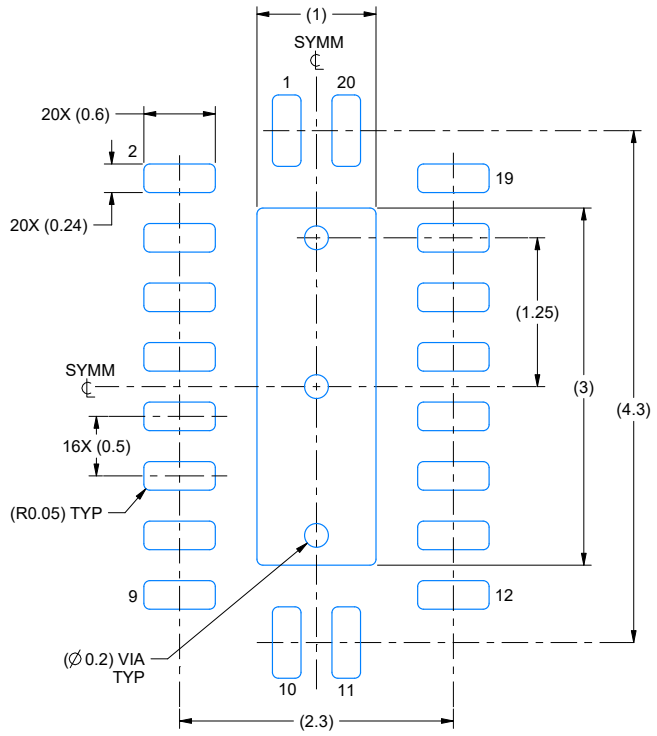

LAND PATTERN EXAMPLE
SCALE:20X

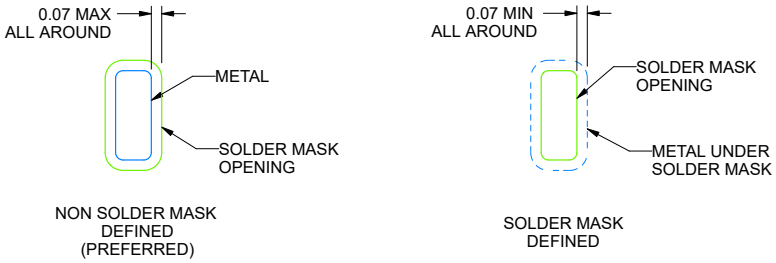

SOLDER MASK DETAILS

4231497/B 03/2025

NOTES: (continued)

5. This package is designed to be soldered to a thermal pad on the board. For more information, see Texas Instruments literature number SLUA271 (www.ti.com/lit/slua271).
6. Vias are optional depending on application, refer to device data sheet. If some or all are implemented, recommended via locations are shown.

Copyright © 2026 Texas Instruments Incorporated

EXAMPLE STENCIL DESIGN

RKS0020C — **VQFN - 1 mm max height**

PLASTIC QUAD FLATPACK - NO LEAD

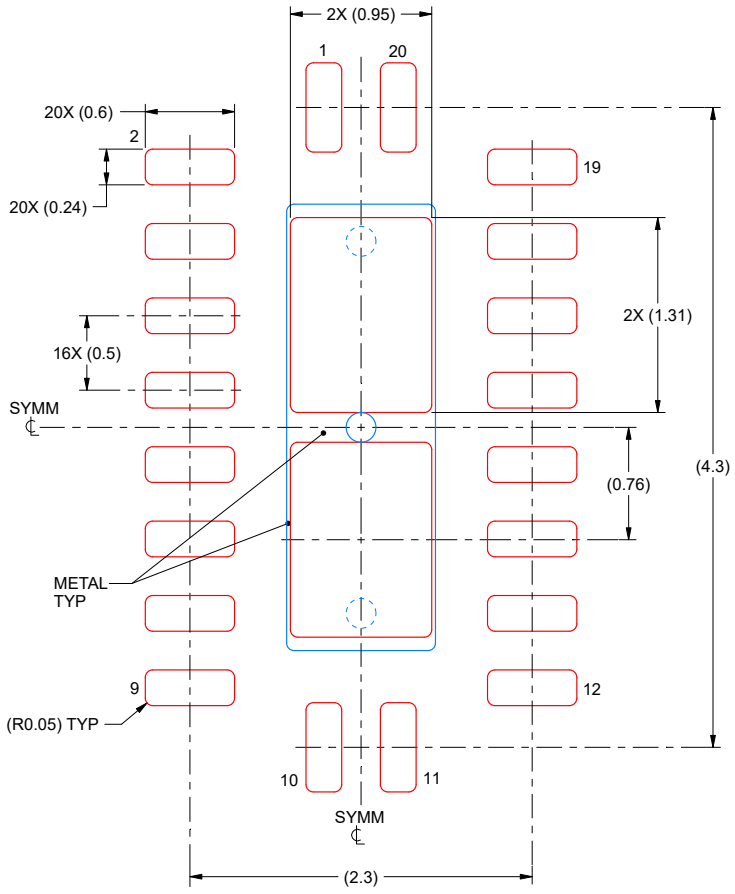

SOLDER PASTE EXAMPLE
BASED ON 0.125 mm THICK STENCIL

EXPOSED PAD
83% PRINTED SOLDER COVERAGE BY AREA
SCALE:25X

4231497/B 03/2025

NOTES: (continued)

7. Laser cutting apertures with trapezoidal walls and rounded corners may offer better paste release. IPC-7525 may have alternate design recommendations.

Copyright © 2026 Texas Instruments Incorporated

PACKAGING INFORMATION

Orderable part number	Status (1)	Material type (2)	Package | Pins	Package qty | Carrier	RoHS (3)	Lead finish/ Ball material (4)	MSL rating/ Peak reflow (5)	Op temp (°C)	Part marking (6)
74CBTLV3245ADGVRG4	Active	Production	TVSOP (DGV) | 20	2000 | LARGE T&R	Yes	NIPDAU	Level-1-260C-UNLIM	-40 to 85	CL245A
74CBTLV3245ADGVRG4.B	Active	Production	TVSOP (DGV) | 20	2000 | LARGE T&R	Yes	NIPDAU	Level-1-260C-UNLIM	-40 to 85	CL245A
74CBTLV3245ADWG4	Active	Production	SOIC (DW) | 20	25 | TUBE	Yes	NIPDAU	Level-1-260C-UNLIM	-40 to 85	CBTLV3245A
74CBTLV3245APWRG4	Active	Production	TSSOP (PW) | 20	2000 | LARGE T&R	Yes	NIPDAU	Level-1-260C-UNLIM	-40 to 85	CL245A
74CBTLV3245APWRG4.B	Active	Production	TSSOP (PW) | 20	2000 | LARGE T&R	Yes	NIPDAU	Level-1-260C-UNLIM	-40 to 85	CL245A
74CBTLV3245ARGYRG4	Active	Production	VQFN (RGY) | 20	3000 | LARGE T&R	Yes	NIPDAU	Level-2-260C-1 YEAR	-40 to 85	CL245A
74CBTLV3245ARGYRG4.A	Active	Production	VQFN (RGY) | 20	3000 | LARGE T&R	Yes	NIPDAU	Level-2-260C-1 YEAR	-40 to 85	CL245A
74CBTLV3245ARGYRG4.B	Active	Production	VQFN (RGY) | 20	3000 | LARGE T&R	Yes	NIPDAU	Level-2-260C-1 YEAR	-40 to 85	CL245A
SN74CBTLV3245ADBQR	Active	Production	SSOP (DBQ) | 20	2500 | LARGE T&R	Yes	NIPDAU	Level-2-260C-1 YEAR	-40 to 85	CBTLV3245A
SN74CBTLV3245ADBQR.A	Active	Production	SSOP (DBQ) | 20	2500 | LARGE T&R	Yes	NIPDAU	Level-2-260C-1 YEAR	-40 to 85	CBTLV3245A
SN74CBTLV3245ADBQR.B	Active	Production	SSOP (DBQ) | 20	2500 | LARGE T&R	Yes	NIPDAU	Level-2-260C-1 YEAR	-40 to 85	CBTLV3245A
SN74CBTLV3245ADGSR	Active	Production	VSSOP (DGS) | 20	5000 | LARGE T&R	Yes	NIPDAU	Level-1-260C-UNLIM	-40 to 85	3245A
SN74CBTLV3245ADGVR	Active	Production	TVSOP (DGV) | 20	2000 | LARGE T&R	Yes	NIPDAU	Level-1-260C-UNLIM	-40 to 85	CL245A
SN74CBTLV3245ADGVR.B	Active	Production	TVSOP (DGV) | 20	2000 | LARGE T&R	Yes	NIPDAU	Level-1-260C-UNLIM	-40 to 85	CL245A
SN74CBTLV3245ADW	Active	Production	SOIC (DW) | 20	25 | TUBE	Yes	NIPDAU	Level-1-260C-UNLIM	-40 to 85	CBTLV3245A
SN74CBTLV3245ADW.B	Active	Production	SOIC (DW) | 20	25 | TUBE	Yes	NIPDAU	Level-1-260C-UNLIM	-40 to 85	CBTLV3245A
SN74CBTLV3245ADWE4	Active	Production	SOIC (DW) | 20	25 | TUBE	Yes	NIPDAU	Level-1-260C-UNLIM	-40 to 85	CBTLV3245A
SN74CBTLV3245ADWR	Active	Production	SOIC (DW) | 20	2000 | LARGE T&R	Yes	NIPDAU	Level-1-260C-UNLIM	-40 to 85	CBTLV3245A
SN74CBTLV3245ADWR.B	Active	Production	SOIC (DW) | 20	2000 | LARGE T&R	Yes	NIPDAU	Level-1-260C-UNLIM	-40 to 85	CBTLV3245A
SN74CBTLV3245APW	Obsolete	Production	TSSOP (PW) | 20	-	-	Call TI	Call TI	-40 to 85	CL245A
SN74CBTLV3245APWR	Active	Production	TSSOP (PW) | 20	2000 | LARGE T&R	Yes	NIPDAU | SN	Level-1-260C-UNLIM	-40 to 85	CL245A
SN74CBTLV3245APWR.A	Active	Production	TSSOP (PW) | 20	2000 | LARGE T&R	Yes	NIPDAU	Level-1-260C-UNLIM	-40 to 85	CL245A
SN74CBTLV3245APWR.B	Active	Production	TSSOP (PW) | 20	2000 | LARGE T&R	Yes	NIPDAU	Level-1-260C-UNLIM	-40 to 85	CL245A
SN74CBTLV3245ARGYR	Active	Production	VQFN (RGY) | 20	3000 | LARGE T&R	Yes	NIPDAU | SN	Level-2-260C-1 YEAR	-40 to 85	CL245A
SN74CBTLV3245ARGYR.A	Active	Production	VQFN (RGY) | 20	3000 | LARGE T&R	Yes	NIPDAU	Level-2-260C-1 YEAR	-40 to 85	CL245A
SN74CBTLV3245ARGYR.B	Active	Production	VQFN (RGY) | 20	3000 | LARGE T&R	Yes	NIPDAU	Level-2-260C-1 YEAR	-40 to 85	CL245A
SN74CBTLV3245ARKSR	Active	Production	VQFN (RKS) | 20	3000 | LARGE T&R	Yes	SN	Level-1-260C-UNLIM	-40 to 85	CL245A

(1) **Status:** For more details on status, see our product life cycle.

(2) **Material type:** When designated, preproduction parts are prototypes/experimental devices, and are not yet approved or released for full production. Testing and final process, including without limitation quality assurance, reliability performance testing, and/or process qualification, may not yet be complete, and this item is subject to further changes or possible discontinuation. If available for ordering, purchases will be subject to an additional waiver at checkout, and are intended for early internal evaluation purposes only. These items are sold without warranties of any kind.

(3) **RoHS values:** Yes, No, RoHS Exempt. See the TI RoHS Statement for additional information and value definition.

(4) **Lead finish/Ball material:** Parts may have multiple material finish options. Finish options are separated by a vertical ruled line. Lead finish/Ball material values may wrap to two lines if the finish value exceeds the maximum column width.

(5) **MSL rating/Peak reflow:** The moisture sensitivity level ratings and peak solder (reflow) temperatures. In the event that a part has multiple moisture sensitivity ratings, only the lowest level per JEDEC standards is shown. Refer to the shipping label for the actual reflow temperature that will be used to mount the part to the printed circuit board.

(6) **Part marking:** There may be an additional marking, which relates to the logo, the lot trace code information, or the environmental category of the part.

Multiple part markings will be inside parentheses. Only one part marking contained in parentheses and separated by a "~" will appear on a part. If a line is indented then it is a continuation of the previous line and the two combined represent the entire part marking for that device.

Important Information and Disclaimer: The information provided on this page represents TI's knowledge and belief as of the date that it is provided. TI bases its knowledge and belief on information provided by third parties, and makes no representation or warranty as to the accuracy of such information. Efforts are underway to better integrate information from third parties. TI has taken and continues to take reasonable steps to provide representative and accurate information but may not have conducted destructive testing or chemical analysis on incoming materials and chemicals. TI and TI suppliers consider certain information to be proprietary, and thus CAS numbers and other limited information may not be available for release.

In no event shall TI's liability arising out of such information exceed the total purchase price of the TI part(s) at issue in this document sold by TI to Customer on an annual basis.

OTHER QUALIFIED VERSIONS OF SN74CBTLV3245A :

- Automotive : SN74CBTLV3245A-Q1

NOTE: Qualified Version Definitions:

- Automotive - Q100 devices qualified for high-reliability automotive applications targeting zero defects

TAPE AND REEL INFORMATION

REEL DIMENSIONS

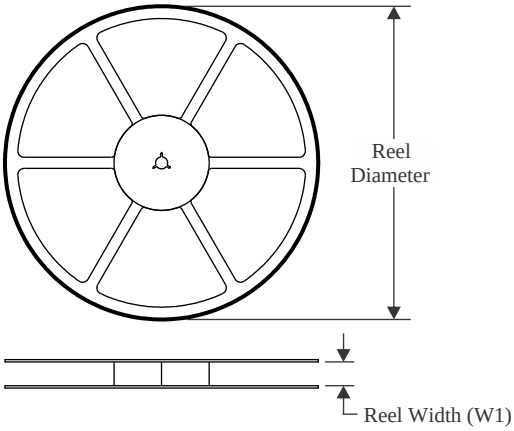

TAPE DIMENSIONS

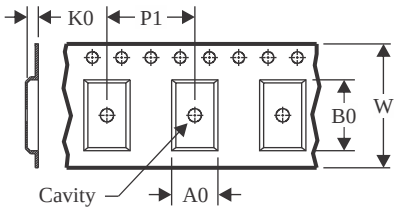

A0	Dimension designed to accommodate the component width
B0	Dimension designed to accommodate the component length
K0	Dimension designed to accommodate the component thickness
W	Overall width of the carrier tape
P1	Pitch between successive cavity centers

QUADRANT ASSIGNMENTS FOR PIN 1 ORIENTATION IN TAPE

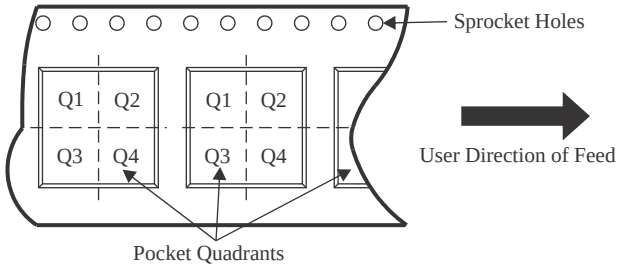

*All dimensions are nominal

Device	Package Type	Package Drawing	Pins	SPQ	Reel Diameter (mm)	Reel Width W1 (mm)	A0 (mm)	B0 (mm)	K0 (mm)	P1 (mm)	W (mm)	Pin1 Quadrant
74CBTLV3245ADGVRG4	TVSOP	DGV	20	2000	330.0	12.4	6.9	5.6	1.6	8.0	12.0	Q1
74CBTLV3245APWRG4	TSSOP	PW	20	2000	330.0	16.4	6.95	7.0	1.4	8.0	16.0	Q1
74CBTLV3245ARGYRG4	VQFN	RGY	20	3000	330.0	12.4	3.71	4.71	1.1	8.0	12.0	Q1
SN74CBTLV3245ADBQR	SSOP	DBQ	20	2500	330.0	16.4	6.5	9.0	2.1	8.0	16.0	Q1
SN74CBTLV3245ADGSR	VSSOP	DGS	20	5000	330.0	16.4	5.4	5.4	1.45	8.0	16.0	Q1
SN74CBTLV3245ADGVR	TVSOP	DGV	20	2000	330.0	12.4	6.9	5.6	1.6	8.0	12.0	Q1
SN74CBTLV3245ADWR	SOIC	DW	20	2000	330.0	24.4	10.8	13.3	2.7	12.0	24.0	Q1
SN74CBTLV3245APWR	TSSOP	PW	20	2000	330.0	16.4	6.95	7.1	1.6	8.0	16.0	Q1
SN74CBTLV3245APWR	TSSOP	PW	20	2000	330.0	16.4	6.95	7.0	1.4	8.0	16.0	Q1
SN74CBTLV3245APWR	TSSOP	PW	20	2000	330.0	16.4	6.95	7.0	1.4	8.0	16.0	Q1
SN74CBTLV3245ARGYR	VQFN	RGY	20	3000	330.0	12.4	3.71	4.71	1.1	8.0	12.0	Q1
SN74CBTLV3245ARGYR	VQFN	RGY	20	3000	330.0	12.4	3.71	4.71	1.1	8.0	12.0	Q1
SN74CBTLV3245ARKSR	VQFN	RKS	20	3000	180.0	12.4	2.8	4.8	1.2	4.0	12.0	Q1

TAPE AND REEL BOX DIMENSIONS

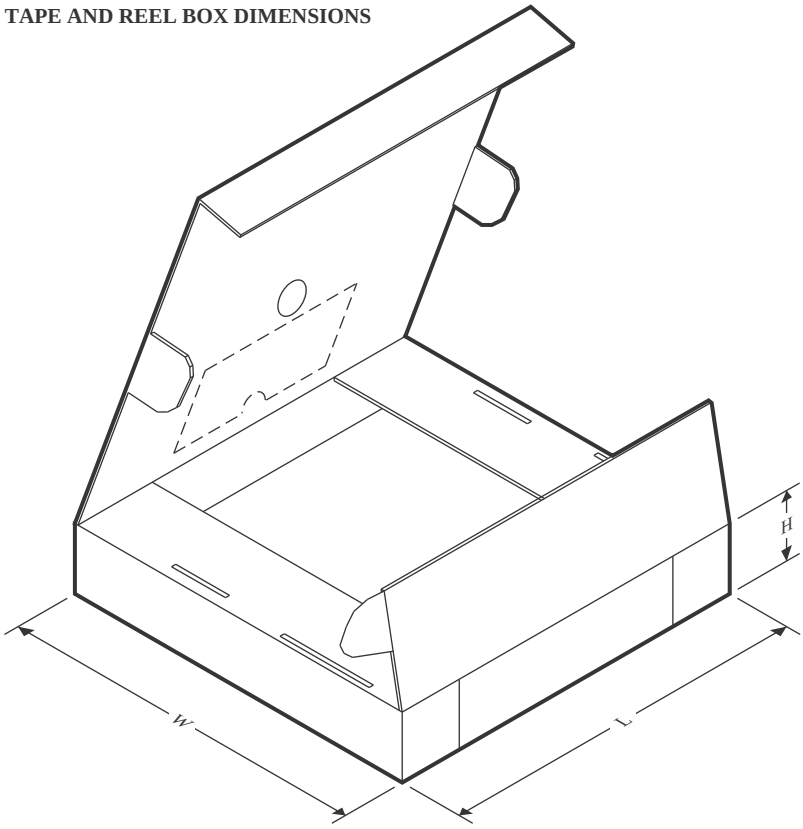

*All dimensions are nominal

Device	Package Type	Package Drawing	Pins	SPQ	Length (mm)	Width (mm)	Height (mm)
74CBTLV3245ADGVRG4	TVSOP	DGV	20	2000	353.0	353.0	32.0
74CBTLV3245APWRG4	TSSOP	PW	20	2000	353.0	353.0	32.0
74CBTLV3245ARGYRG4	VQFN	RGY	20	3000	353.0	353.0	32.0
SN74CBTLV3245ADBQR	SSOP	DBQ	20	2500	353.0	353.0	32.0
SN74CBTLV3245ADGSR	VSSOP	DGS	20	5000	353.0	353.0	32.0
SN74CBTLV3245ADGVR	TVSOP	DGV	20	2000	353.0	353.0	32.0
SN74CBTLV3245ADWR	SOIC	DW	20	2000	356.0	356.0	45.0
SN74CBTLV3245APWR	TSSOP	PW	20	2000	364.0	364.0	27.0
SN74CBTLV3245APWR	TSSOP	PW	20	2000	353.0	353.0	32.0
SN74CBTLV3245APWR	TSSOP	PW	20	2000	353.0	353.0	32.0
SN74CBTLV3245ARGYR	VQFN	RGY	20	3000	353.0	353.0	32.0
SN74CBTLV3245ARGYR	VQFN	RGY	20	3000	360.0	360.0	36.0
SN74CBTLV3245ARKSR	VQFN	RKS	20	3000	210.0	185.0	35.0

TUBE

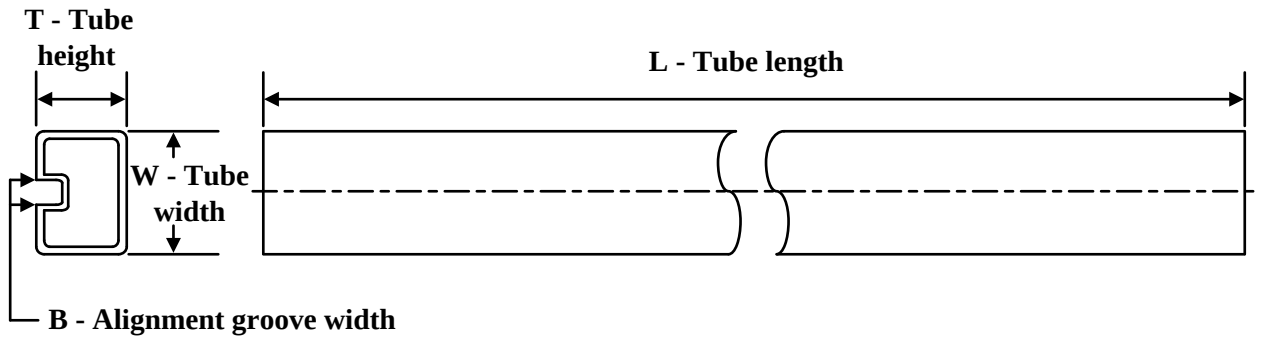

*All dimensions are nominal

Device	Package Name	Package Type	Pins	SPQ	L (mm)	W (mm)	T (µm)	B (mm)
74CBTLV3245ADWG4	DW	SOIC	20	25	507	12.83	5080	6.6
SN74CBTLV3245ADW	DW	SOIC	20	25	507	12.83	5080	6.6
SN74CBTLV3245ADW.B	DW	SOIC	20	25	507	12.83	5080	6.6
SN74CBTLV3245ADWE4	DW	SOIC	20	25	507	12.83	5080	6.6

DGV (R-PDSO-G)** **PLASTIC SMALL-OUTLINE**

24 PINS SHOWN

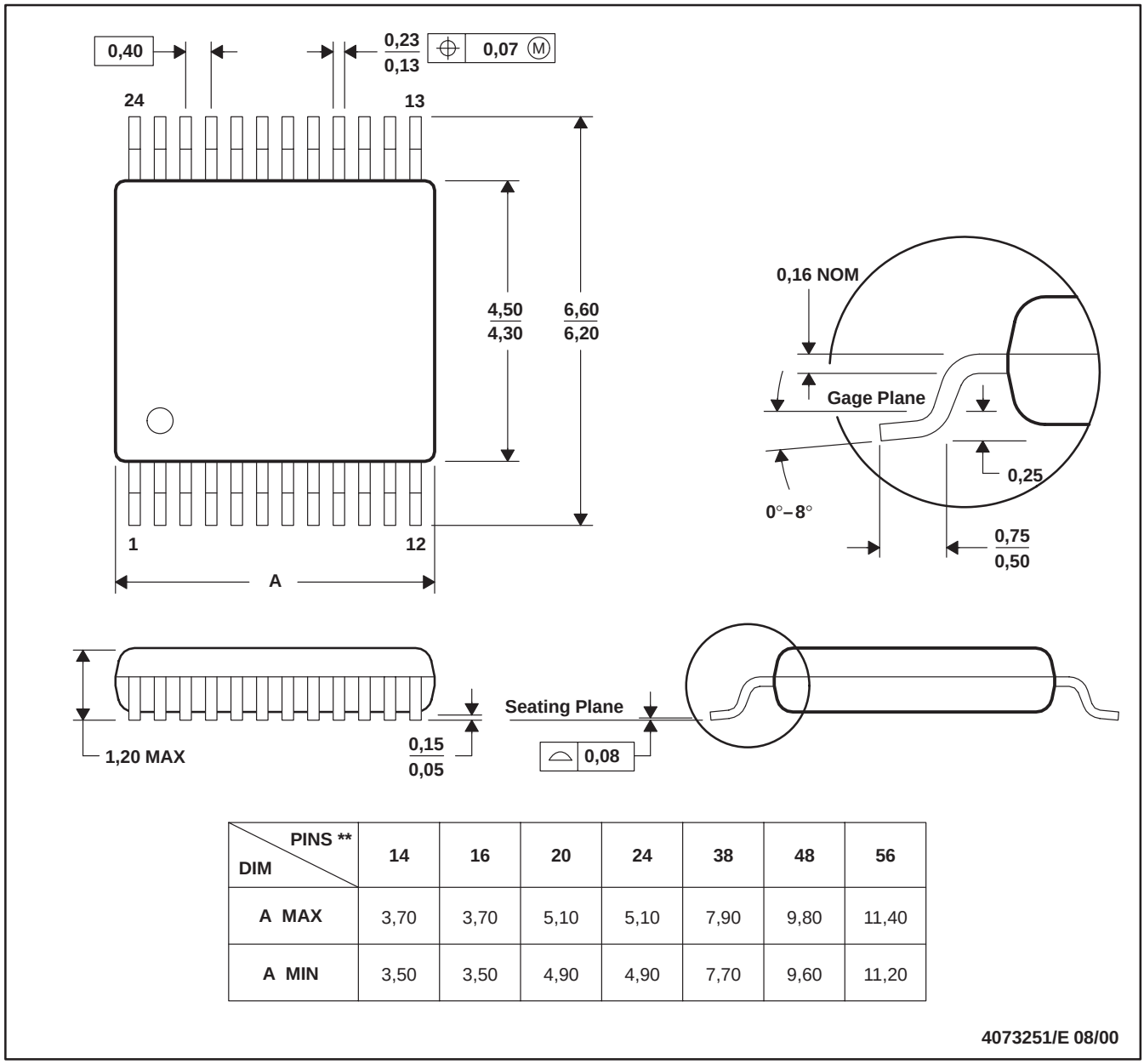

DIM \ PINS **	14	16	20	24	38	48	56
A MAX	3,70	3,70	5,10	5,10	7,90	9,80	11,40
A MIN	3,50	3,50	4,90	4,90	7,70	9,60	11,20

4073251/E 08/00

NOTES: A. All linear dimensions are in millimeters.
B. This drawing is subject to change without notice.
C. Body dimensions do not include mold flash or protrusion, not to exceed 0,15 per side.
D. Falls within JEDEC: 24/48 Pins – MO-153
14/16/20/56 Pins – MO-194

GENERIC PACKAGE VIEW

RGY 20

VQFN - 1 mm max height

3.5 x 4.5, 0.5 mm pitch

PLASTIC QUAD FGLATPACK - NO LEAD

This image is a representation of the package family, actual package may vary.
Refer to the product data sheet for package details.

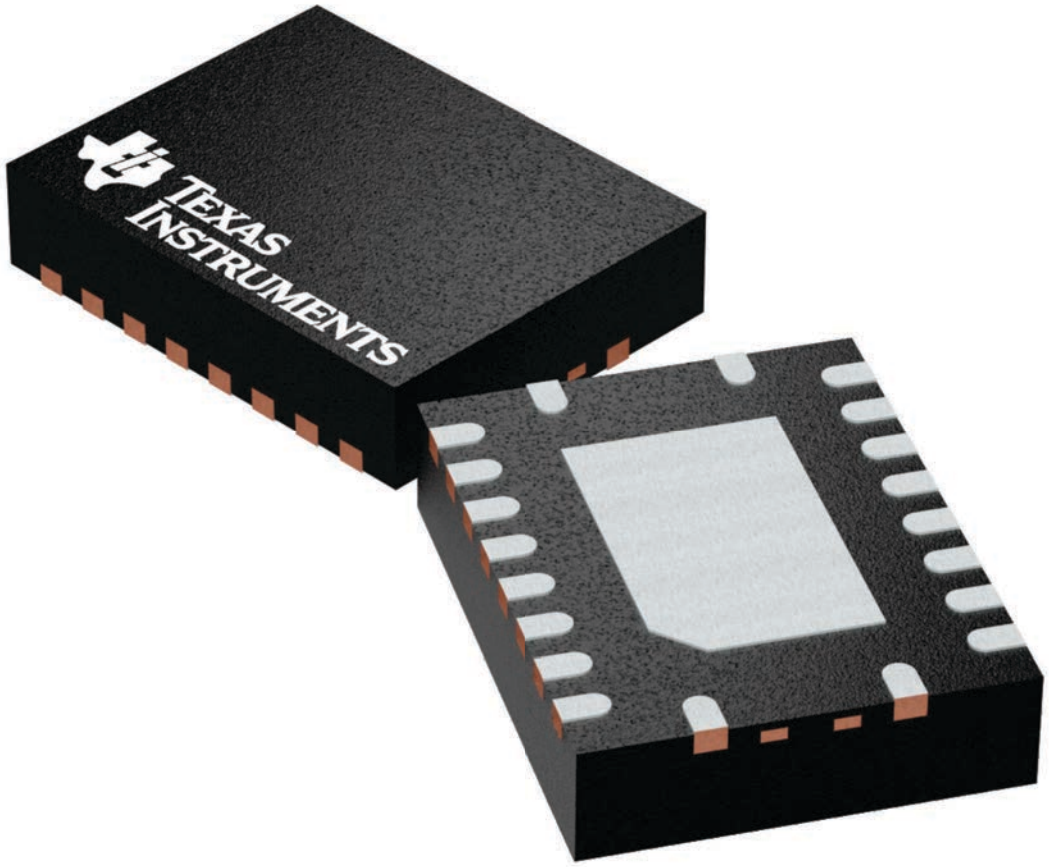

4225264/A

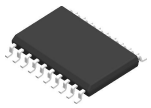

PACKAGE OUTLINE

DW0020A

SOIC - 2.65 mm max height

SOIC

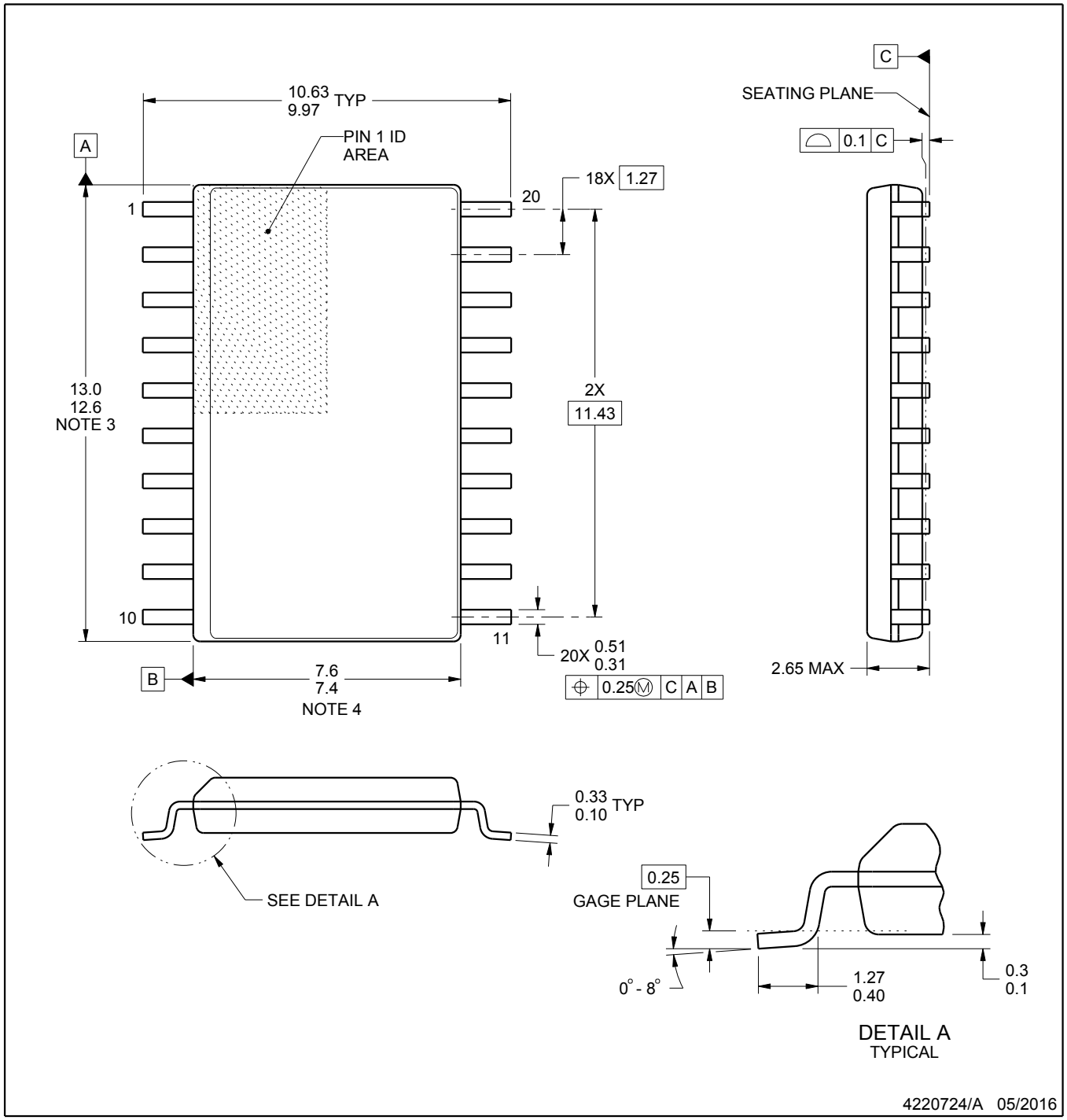

NOTES:

1. All linear dimensions are in millimeters. Dimensions in parenthesis are for reference only. Dimensioning and tolerancing per ASME Y14.5M.
2. This drawing is subject to change without notice.
3. This dimension does not include mold flash, protrusions, or gate burrs. Mold flash, protrusions, or gate burrs shall not exceed 0.15 mm per side.
4. This dimension does not include interlead flash. Interlead flash shall not exceed 0.43 mm per side.
5. Reference JEDEC registration MS-013.

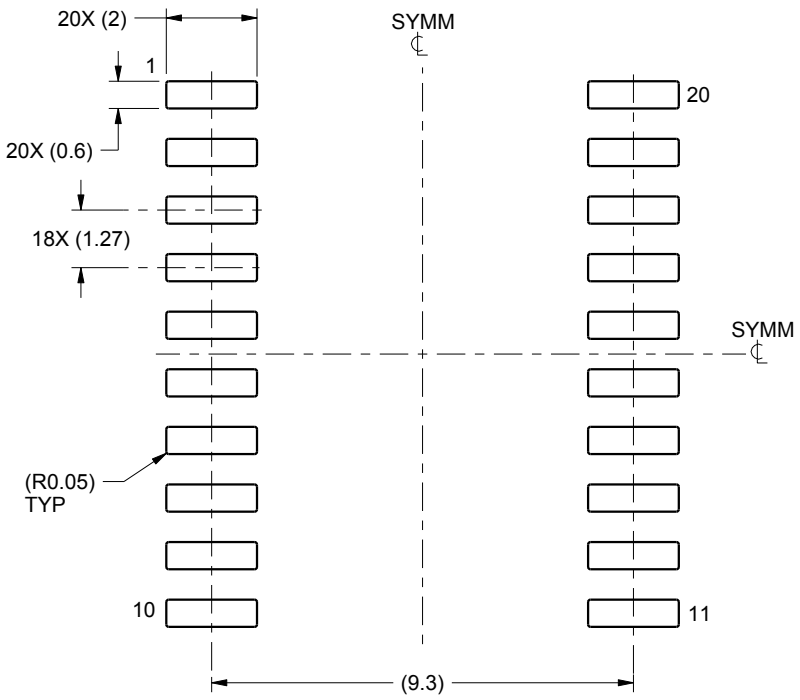

LAND PATTERN EXAMPLE
SCALE:6X

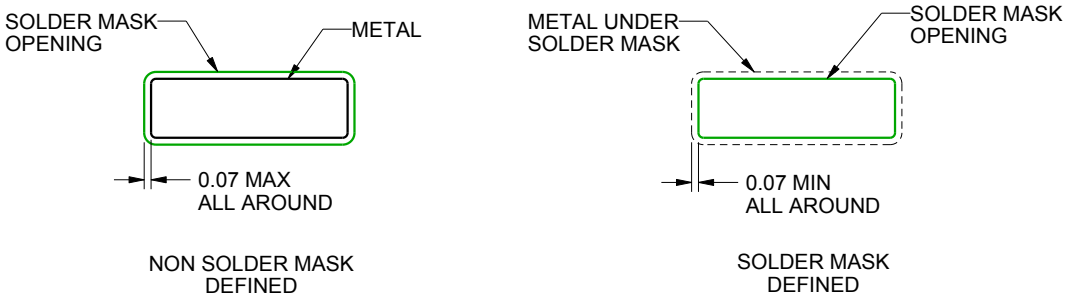

SOLDER MASK DETAILS

4220724/A 05/2016

NOTES: (continued)

6. Publication IPC-7351 may have alternate designs.
7. Solder mask tolerances between and around signal pads can vary based on board fabrication site.

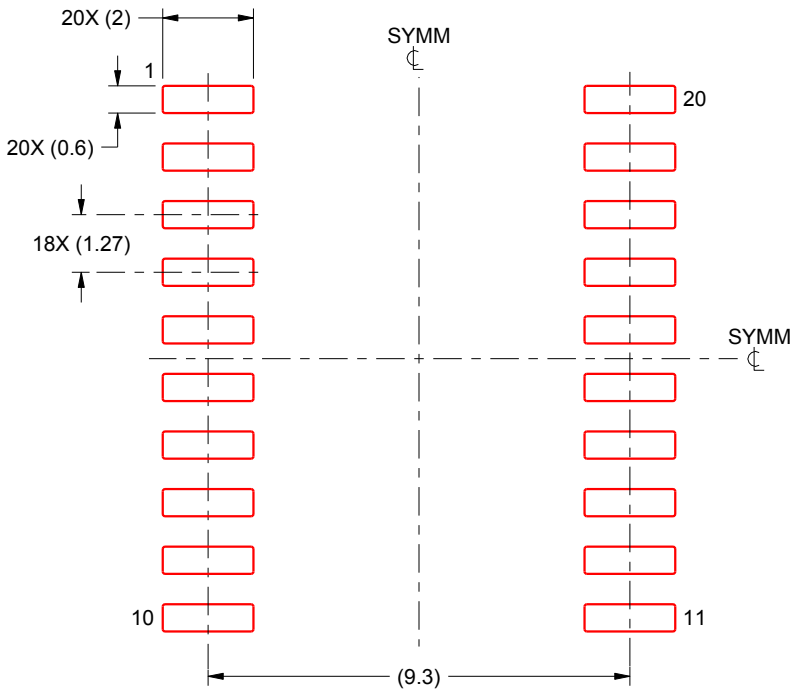

SOLDER PASTE EXAMPLE
BASED ON 0.125 mm THICK STENCIL
SCALE:6X

4220724/A 05/2016

NOTES: (continued)

8. Laser cutting apertures with trapezoidal walls and rounded corners may offer better paste release. IPC-7525 may have alternate design recommendations.
9. Board assembly site may have different recommendations for stencil design.

PACKAGE OUTLINE

PW0020A

TSSOP - 1.2 mm max height

SMALL OUTLINE PACKAGE

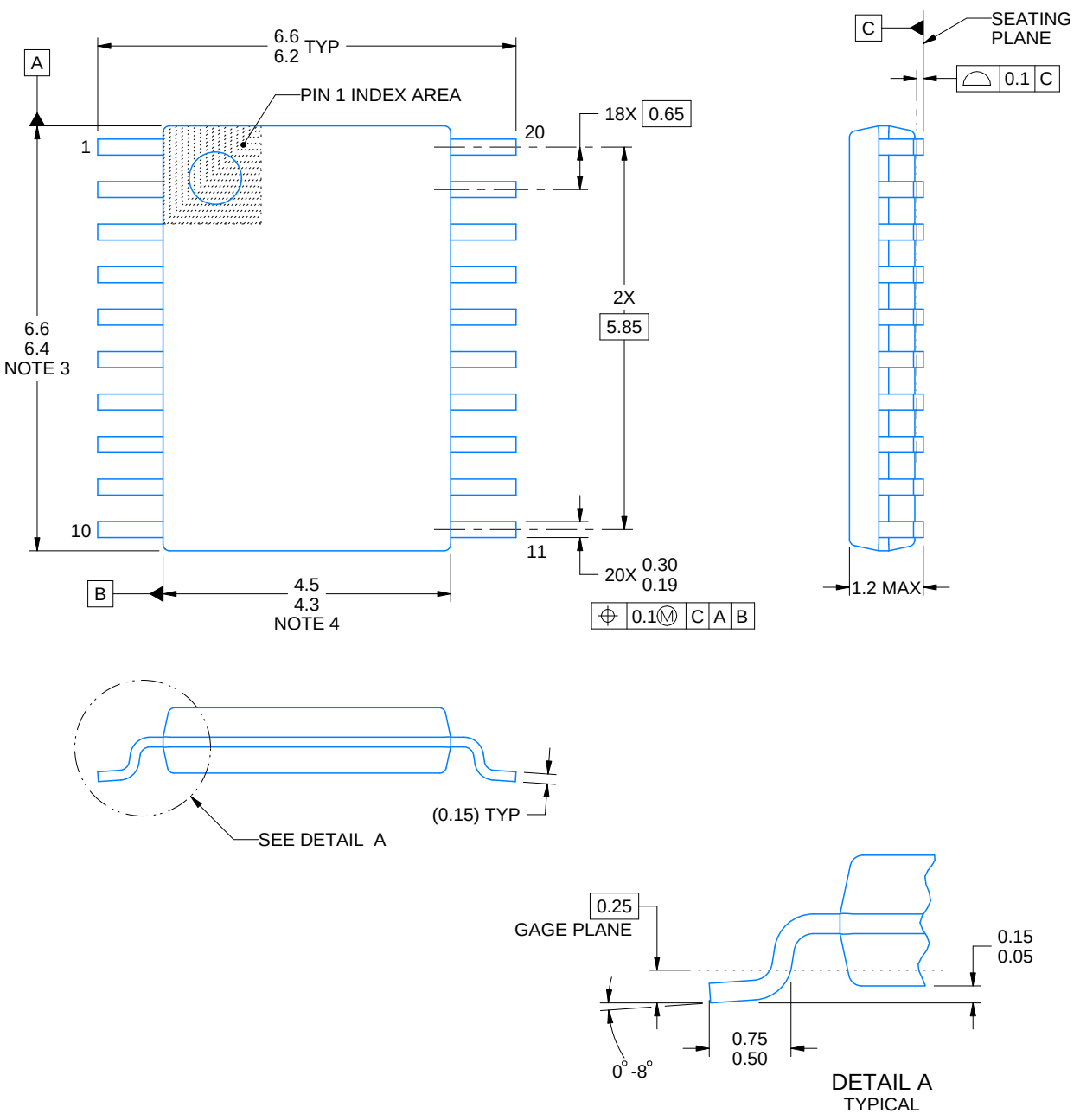

NOTES:

1. All linear dimensions are in millimeters. Any dimensions in parenthesis are for reference only. Dimensioning and tolerancing per ASME Y14.5M.
2. This drawing is subject to change without notice.
3. This dimension does not include mold flash, protrusions, or gate burrs. Mold flash, protrusions, or gate burrs shall not exceed 0.15 mm per side.
4. This dimension does not include interlead flash. Interlead flash shall not exceed 0.25 mm per side.
5. Reference JEDEC registration MO-153.

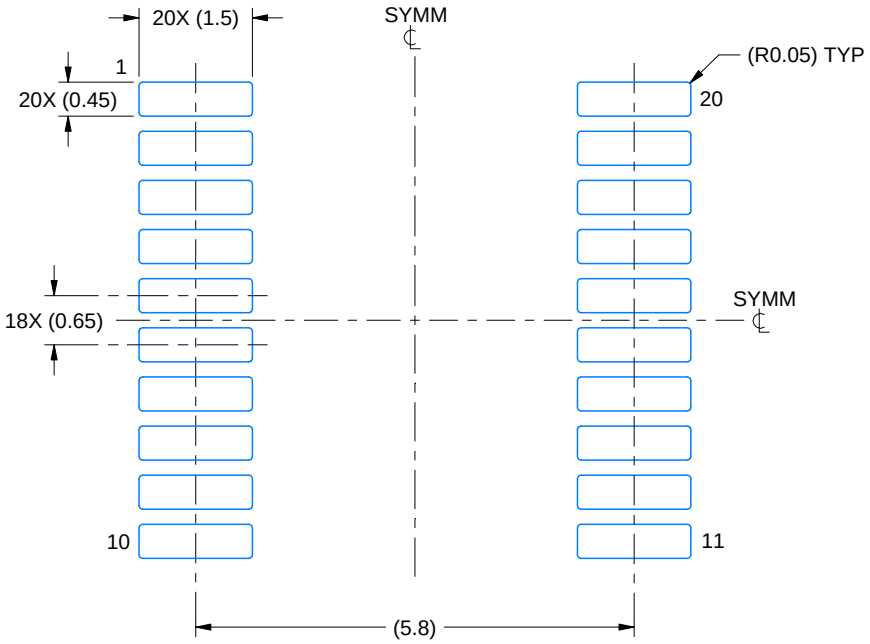

LAND PATTERN EXAMPLE
EXPOSED METAL SHOWN
SCALE: 10X



SOLDER MASK DETAILS

4220206/A 02/2017

NOTES: (continued)

6. Publication IPC-7351 may have alternate designs.
7. Solder mask tolerances between and around signal pads can vary based on board fabrication site.

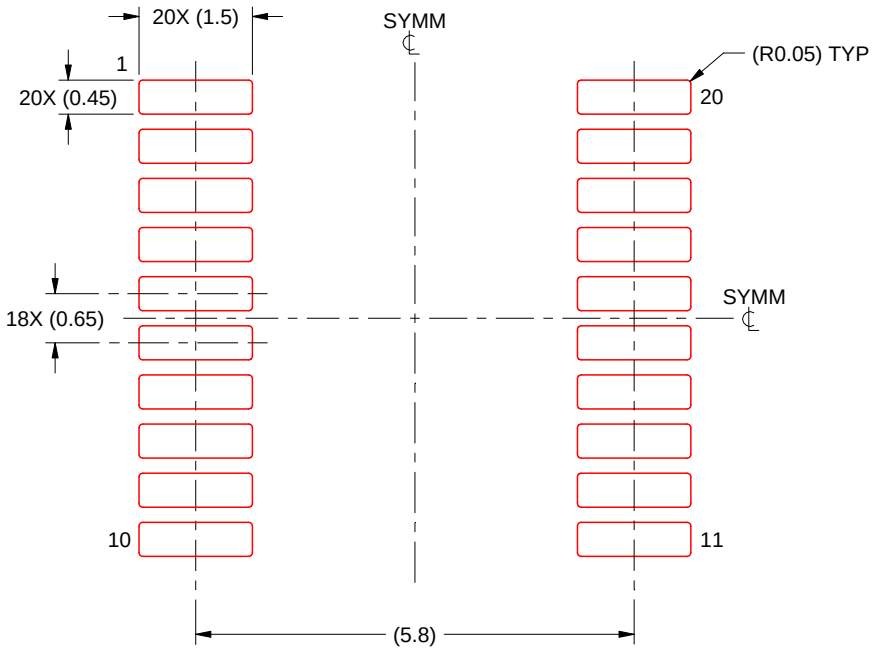

SOLDER PASTE EXAMPLE
BASED ON 0.125 mm THICK STENCIL
SCALE: 10X

4220206/A 02/2017

NOTES: (continued)

8. Laser cutting apertures with trapezoidal walls and rounded corners may offer better paste release. IPC-7525 may have alternate design recommendations.
9. Board assembly site may have different recommendations for stencil design.

PACKAGE OUTLINE

DGS0020A

VSSOP - 1.1 mm max height

SMALL OUTLINE PACKAGE

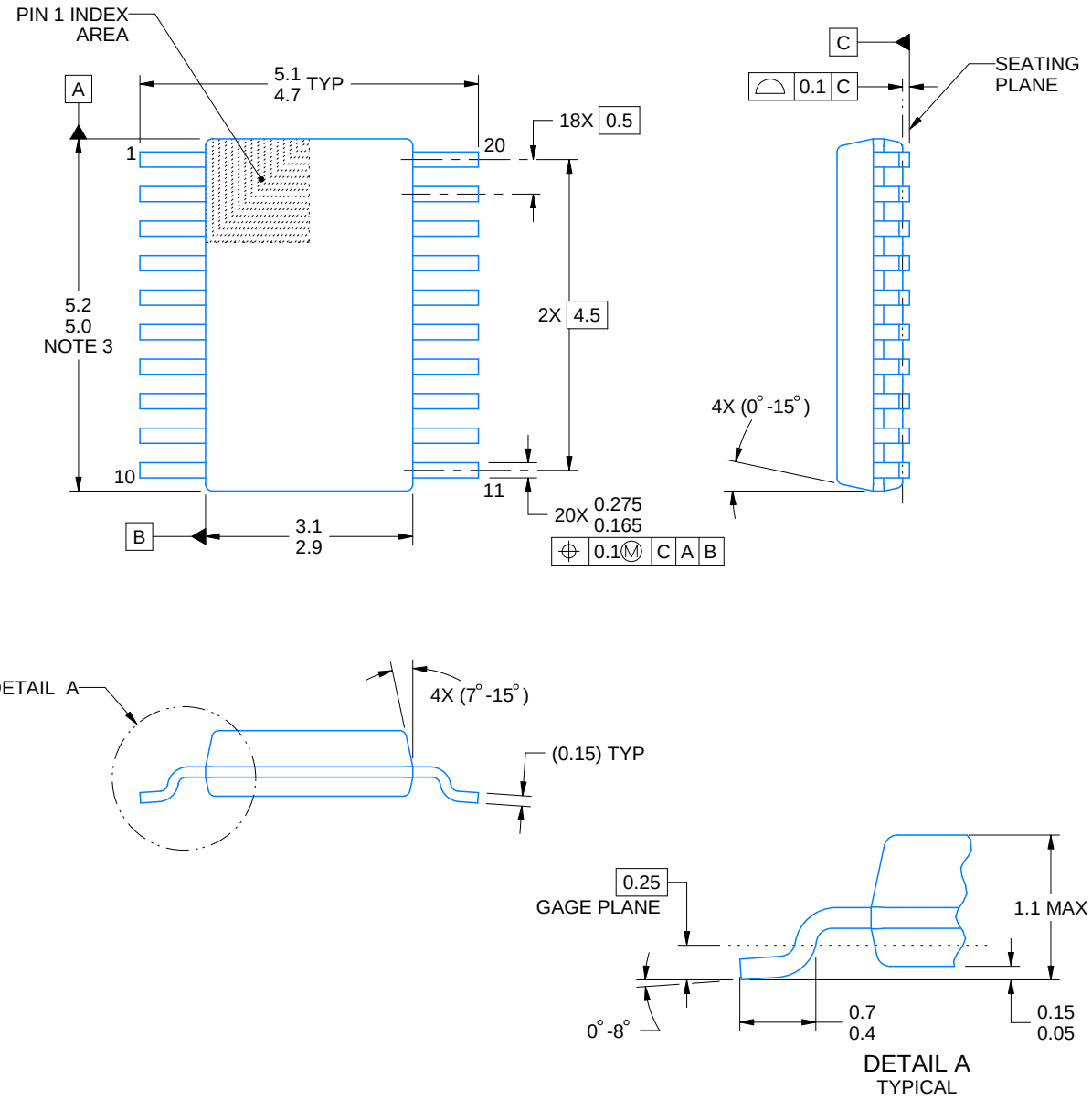

PowerPAD is a trademark of Texas Instruments.

NOTES:

1. All linear dimensions are in millimeters. Any dimensions in parenthesis are for reference only. Dimensioning and tolerancing per ASME Y14.5M.
2. This drawing is subject to change without notice.
3. This dimension does not include mold flash, protrusions, or gate burrs. Mold flash, protrusions, or gate burrs shall not exceed 0.15 mm per side.
4. No JEDEC registration as of September 2020.
5. Features may differ or may not be present.

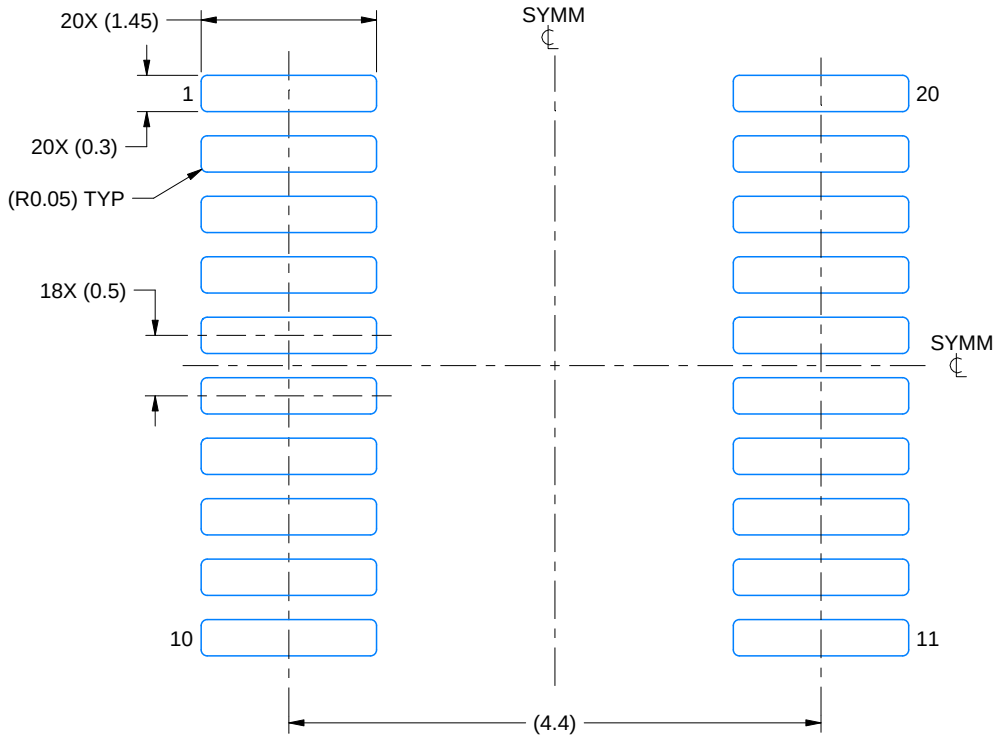

LAND PATTERN EXAMPLE
SCALE: 16X

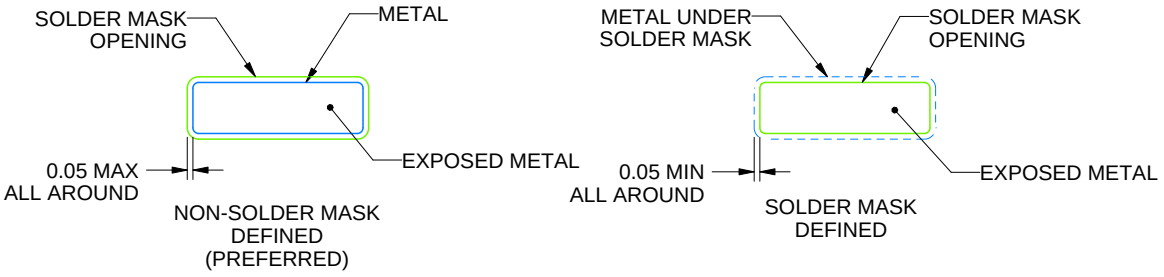

SOLDER MASK DETAILS

4226367/A 10/2020

NOTES: (continued)

6. Publication IPC-7351 may have alternate designs.
7. Solder mask tolerances between and around signal pads can vary based on board fabrication site.
8. This package is designed to be soldered to a thermal pad on the board. For more information, see Texas Instruments literature numbers SLMA002 (www.ti.com/lit/slma002) and SLMA004 (www.ti.com/lit/slma004).
9. Size of metal pad may vary due to creepage requirement.
10. Vias are optional depending on application, refer to device data sheet. It is recommended that vias under paste be filled, plugged or tented.

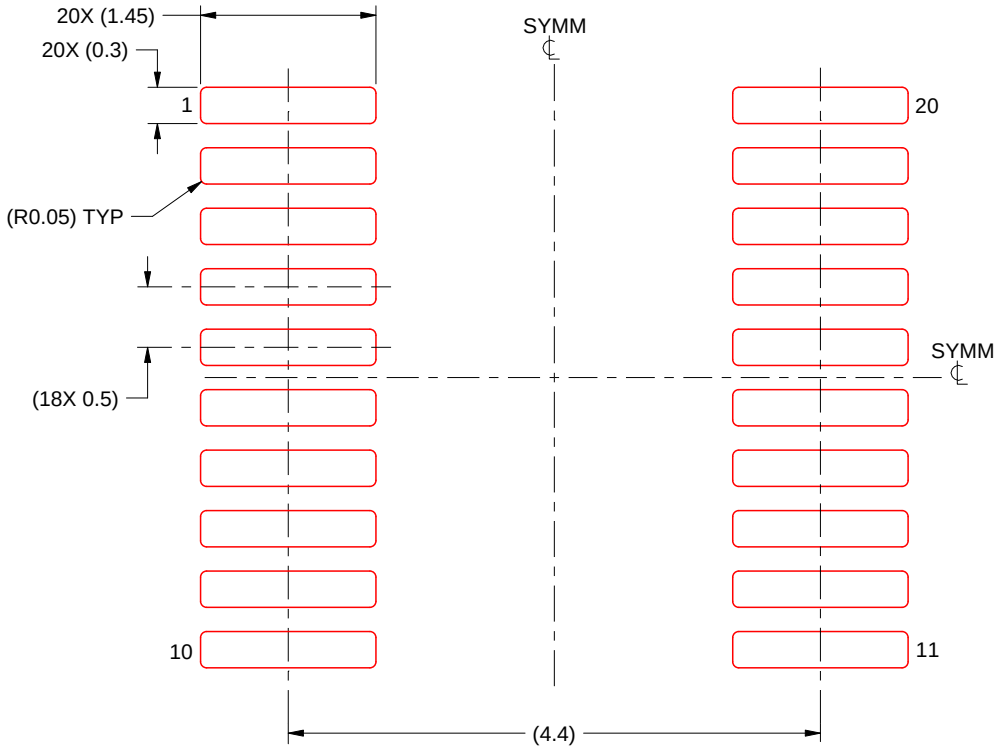

SOLDER PASTE EXAMPLE
BASED ON 0.125 mm THICK STENCIL
SCALE: 16X

4226367/A 10/2020

NOTES: (continued)

11. Laser cutting apertures with trapezoidal walls and rounded corners may offer better paste release. IPC-7525 may have alternate design recommendations.
12. Board assembly site may have different recommendations for stencil design.

DBQ (R–PDSO–G20) PLASTIC SMALL–OUTLINE PACKAGE

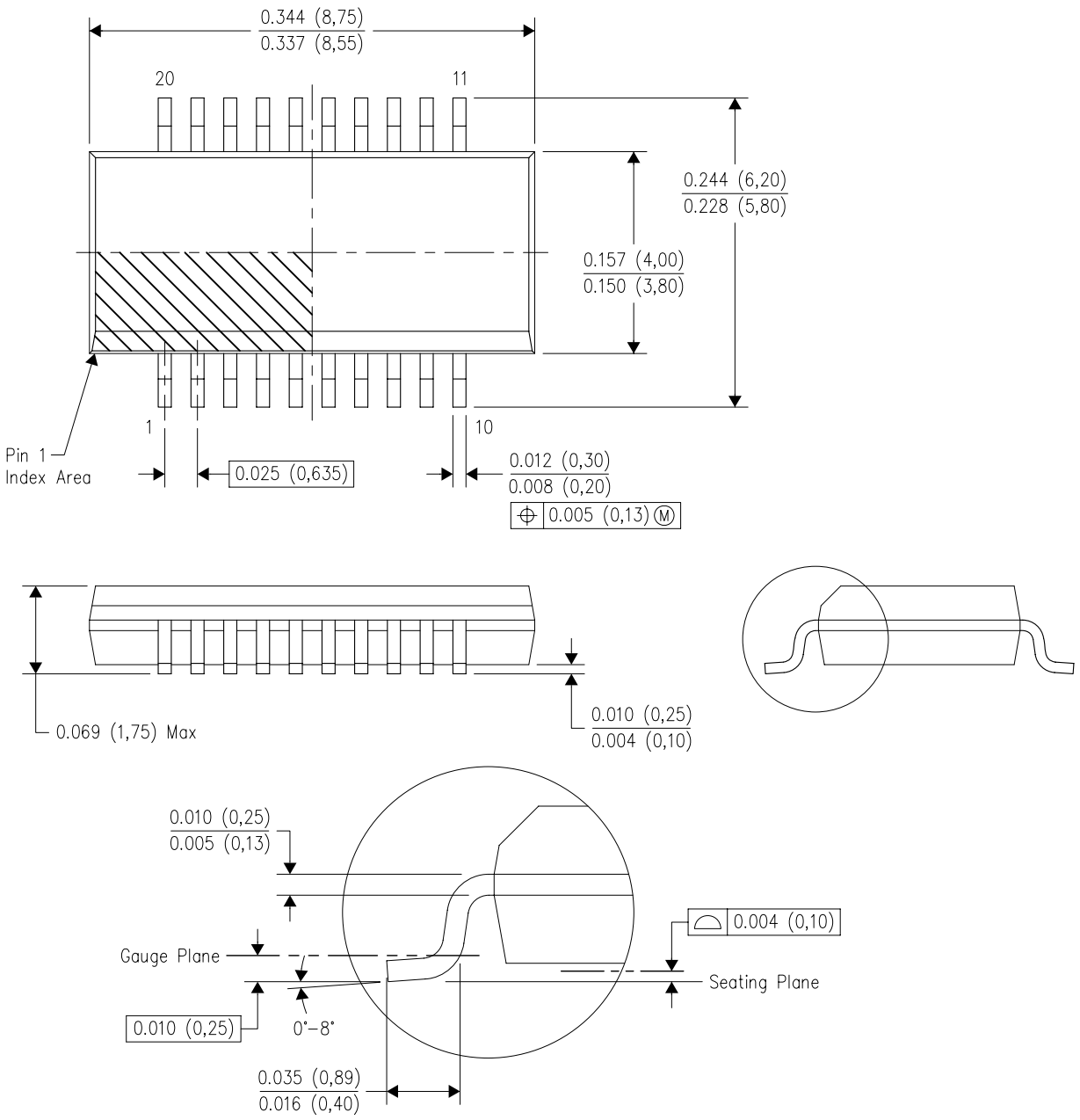

NOTES:
A. All linear dimensions are in inches (millimeters).
B. This drawing is subject to change without notice.
C. Body dimensions do not include mold flash or protrusion not to exceed 0.006 (0,15) per side.
D. Falls within JEDEC MO–137 variation AD.

GENERIC PACKAGE VIEW

RKS 20

VQFN - 1 mm max height

2.5 x 4.5, 0.5 mm pitch

PLASTIC QUAD FLATPACK - NO LEAD

This image is a representation of the package family, actual package may vary.
Refer to the product data sheet for package details.

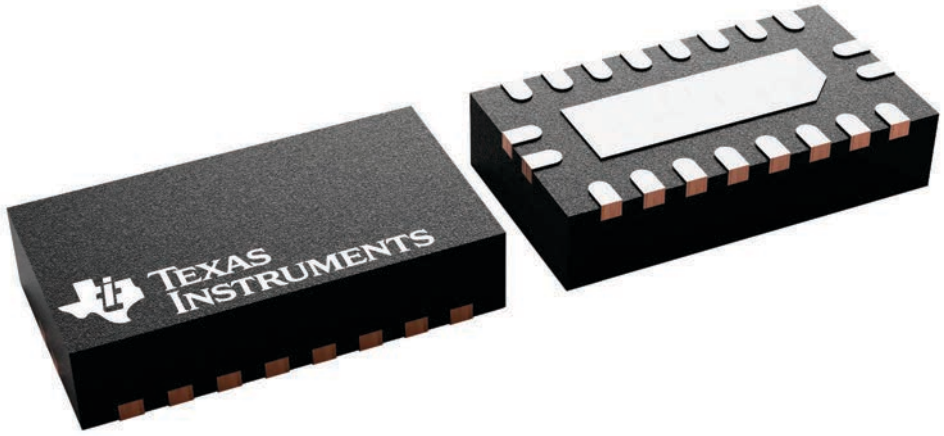

PACKAGE OUTLINE

RKS0020A

VQFN - 1 mm max height

PLASTIC QUAD FLATPACK - NO LEAD

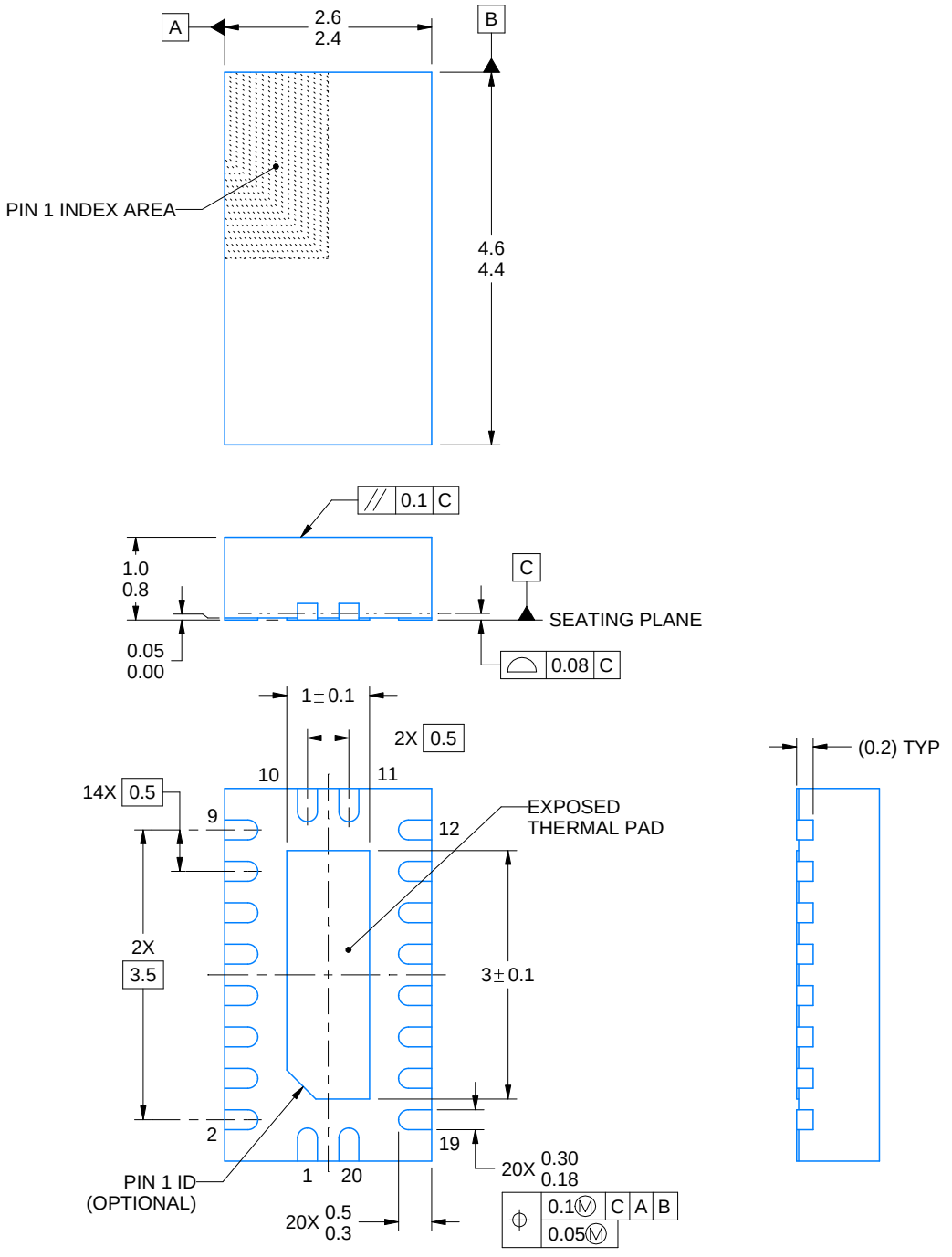

NOTES:

1. All linear dimensions are in millimeters. Any dimensions in parenthesis are for reference only. Dimensioning and tolerancing per ASME Y14.5M.
2. This drawing is subject to change without notice.
3. The package thermal pad must be soldered to the printed circuit board for thermal and mechanical performance.

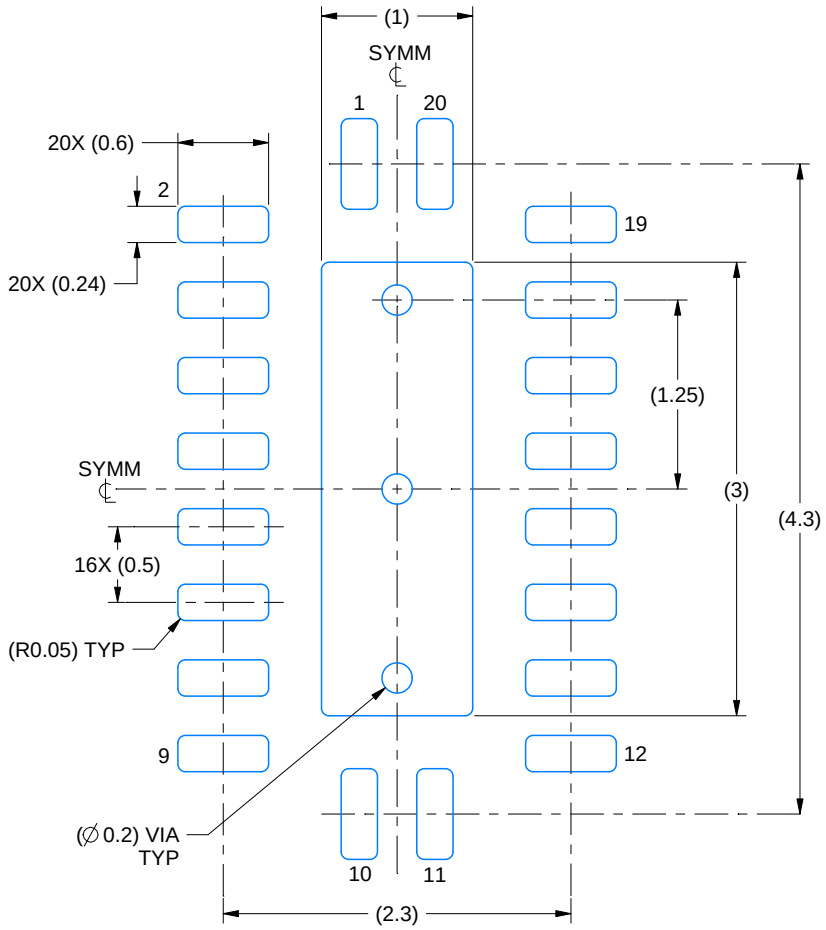

LAND PATTERN EXAMPLE
SCALE:20X

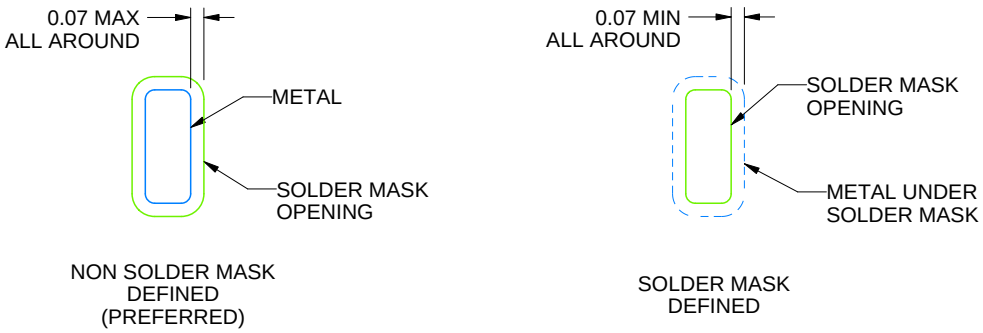

SOLDER MASK DETAILS

4222490/B 02/2021

NOTES: (continued)

4. This package is designed to be soldered to a thermal pad on the board. For more information, see Texas Instruments literature number SLUA271 (www.ti.com/lit/slua271).
5. Vias are optional depending on application, refer to device data sheet. If some or all are implemented, recommended via locations are shown.

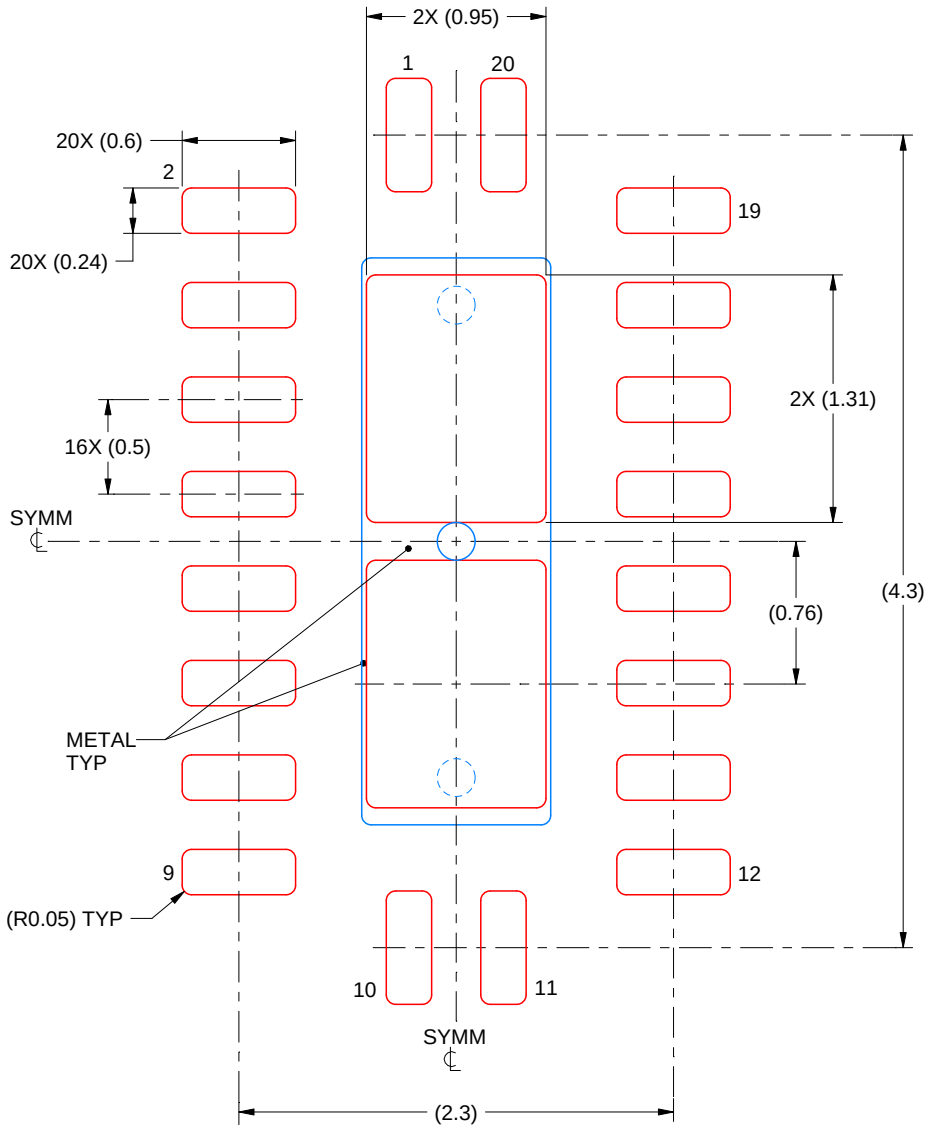

SOLDER PASTE EXAMPLE
BASED ON 0.125 mm THICK STENCIL

EXPOSED PAD
83% PRINTED SOLDER COVERAGE BY AREA
SCALE:25X

4222490/B 02/2021

NOTES: (continued)

6. Laser cutting apertures with trapezoidal walls and rounded corners may offer better paste release. IPC-7525 may have alternate design recommendations.

IMPORTANT NOTICE AND DISCLAIMER

TI PROVIDES TECHNICAL AND RELIABILITY DATA (INCLUDING DATASHEETS), DESIGN RESOURCES (INCLUDING REFERENCE DESIGNS), APPLICATION OR OTHER DESIGN ADVICE, WEB TOOLS, SAFETY INFORMATION, AND OTHER RESOURCES “AS IS” AND WITH ALL FAULTS, AND DISCLAIMS ALL WARRANTIES, EXPRESS AND IMPLIED, INCLUDING WITHOUT LIMITATION ANY IMPLIED WARRANTIES OF MERCHANTABILITY, FITNESS FOR A PARTICULAR PURPOSE OR NON-INFRINGEMENT OF THIRD PARTY INTELLECTUAL PROPERTY RIGHTS.

These resources are intended for skilled developers designing with TI products. You are solely responsible for (1) selecting the appropriate TI products for your application, (2) designing, validating and testing your application, and (3) ensuring your application meets applicable standards, and any other safety, security, regulatory or other requirements.

These resources are subject to change without notice. TI grants you permission to use these resources only for development of an application that uses the TI products described in the resource. Other reproduction and display of these resources is prohibited. No license is granted to any other TI intellectual property right or to any third party intellectual property right. TI disclaims responsibility for, and you fully indemnify TI and its representatives against any claims, damages, costs, losses, and liabilities arising out of your use of these resources.

TI’s products are provided subject to TI’s Terms of Sale, TI’s General Quality Guidelines, or other applicable terms available either on ti.com or provided in conjunction with such TI products. TI’s provision of these resources does not expand or otherwise alter TI’s applicable warranties or warranty disclaimers for TI products. Unless TI explicitly designates a product as custom or customer-specified, TI products are standard, catalog, general purpose devices.

TI objects to and rejects any additional or different terms you may propose.

Copyright © 2026, Texas Instruments Incorporated

Last updated 10/2025