SDFS040A − MARCH 1987 − REVISED OCTOBER 1993

- **Package Options Include Plastic Small-Outline Packages, Ceramic Chip Carriers, and Standard Plastic and Ceramic 300-mil DIPs**

description

These devices contain three independent 3-input AND gates. They perform the Boolean functions $Y = A \bullet B \bullet C$ or $Y = \overline{A} + \overline{B} + \overline{C}$ in positive logic.

The SN54F11 is characterized for operation over the full military temperature range of −55°C to 125°C. The SN74F11 is characterized for operation from 0°C to 70°C.

FUNCTION TABLE
(each gate)

INPUTS			OUTPUT
A	B	C	Y
H	H	H	H
L	X	X	L
X	L	X	L
X	X	L	L

logic symbol†

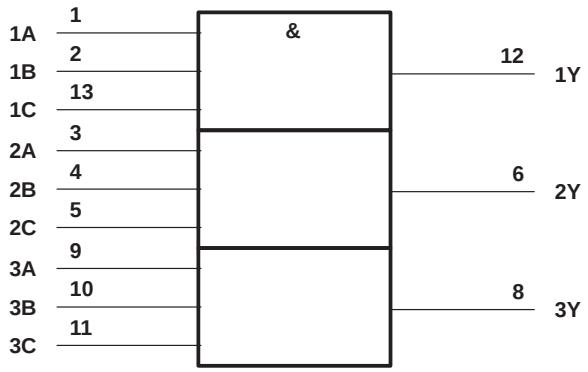

† This symbol is in accordance with ANSI/IEEE Std 91-1984 and IEC Publication 617-12.
Pin numbers shown are for the D, J, and N packages.

SN54F11 . . . J PACKAGE
SN74F11 . . . D OR N PACKAGE
(TOP VIEW)

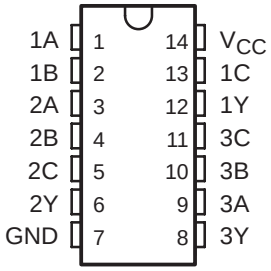

SN54F11 . . . FK PACKAGE
(TOP VIEW)

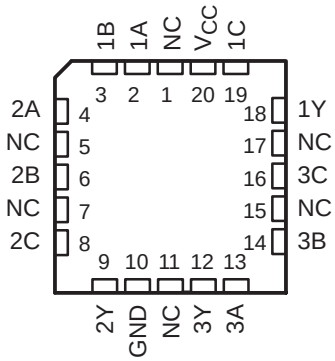

NC − No internal connection

logic diagram, each gate (positive logic)

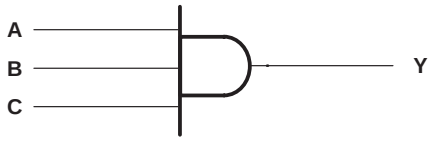

PRODUCTION DATA information is current as of publication date. Products conform to specifications per the terms of Texas Instruments standard warranty. Production processing does not necessarily include testing of all parameters.

Copyright © 1993, Texas Instruments Incorporated

absolute maximum ratings over operating free-air temperature range (unless otherwise noted)†

Supply voltage range, V_{CC} . . . . . −0.5 V to 7 V
Input voltage range, V_I (see Note 1) . . . . . −1.2 V to 7 V
Input current range . . . . . −30 mA to 5 mA
Voltage range applied to any output in the high state . . . . . −0.5 V to V_{CC}
Current into any output in the low state . . . . . 40 mA
Operating free-air temperature range: SN54F11 . . . . . −55°C to 125°C
SN74F11 . . . . . 0°C to 70°C
Storage temperature range . . . . . −65°C to 150°C

† Stresses beyond those listed under “absolute maximum ratings” may cause permanent damage to the device. These are stress ratings only and functional operation of the device at these or any other conditions beyond those indicated under “recommended operating conditions” is not implied. Exposure to absolute-maximum-rated conditions for extended periods may affect device reliability.
NOTE 1: The input voltage ratings may be exceeded provided the input current ratings are observed.

recommended operating conditions

		SN54F11			SN74F11			UNIT
		MIN	NOM	MAX	MIN	NOM	MAX	
V_{CC}	Supply voltage	4.5	5	5.5	4.5	5	5.5	V
V_{IH}	High-level input voltage	2			2			V
V_{IL}	Low-level input voltage			0.8			0.8	V
I_{IK}	Input clamp current			−18			−18	mA
I_{OH}	High-level output current			− 1			− 1	mA
I_{OL}	Low-level output current			20			20	mA
T_A	Operating free-air temperature	−55		125	0		70	°C

electrical characteristics over recommended operating free-air temperature range (unless otherwise noted)

PARAMETER	TEST CONDITIONS		SN54F11			SN74F11			UNIT
			MIN	TYP‡	MAX	MIN	TYP‡	MAX	
V_{IK}	V_{CC} = 4.5 V,	I_I = −18 mA			−1.2			−1.2	V
V_{OH}	V_{CC} = 4.5 V,	I_{OH} = − 1 mA	2.5	3.4		2.5	3.4		V
	V_{CC} = 4.75 V,	I_{OH} = − 1 mA				2.7			
V_{OL}	V_{CC} = 4.5 V,	I_{OL} = 20 mA		0.3	0.5		0.3	0.5	V
I_I	V_{CC} = 5.5 V,	V_I = 7 V			0.1			0.1	mA
I_{IH}	V_{CC} = 5.5 V,	V_I = 2.7 V			20			20	µA
I_{IL}	V_{CC} = 5.5 V,	V_I = 0.5 V			− 0.6			− 0.6	mA
I_{OS}§	V_{CC} = 5.5 V,	V_O = 0	−60		−150	−60		−150	mA
I_{CCH}	V_{CC} = 5.5 V,	V_I = 4.5 V		4.1	6.2		4.1	6.2	mA
I_{CCL}	V_{CC} = 5.5 V,	V_I = 0		6.5	9.7		6.5	9.7	mA

‡ All typical values are at V_{CC} = 5 V, T_A = 25°C.
§ Not more than one output should be shorted at a time, and the duration of the short circuit should not exceed one second.

switching characteristics

PARAMETER	FROM (INPUT)	TO (OUTPUT)	V_{CC} = 5 V, C_L = 50 pF, R_L = 500 Ω, T_A = 25°C			V_{CC} = 4.5 V to 5.5 V, C_L = 50 pF, R_L = 500 Ω, T_A = MIN to MAX†				UNIT
			′F11			SN54F11		SN74F11		
			MIN	TYP	MAX	MIN	MAX	MIN	MAX	
t_{PLH}	A, B, or C	Y	2.2	3.8	5.6	1.7	7.5	2.2	6.6	ns
t_{PHL}			1.7	3.7	5.5	1.2	7.5	1.7	6.5	

† For conditions shown as MIN or MAX, use the appropriate value specified under recommended operating conditions.

PACKAGING INFORMATION

Orderable part number	Status (1)	Material type (2)	Package | Pins	Package qty | Carrier	RoHS (3)	Lead finish/ Ball material (4)	MSL rating/ Peak reflow (5)	Op temp (°C)	Part marking (6)
5962-9758101Q2A	Active	Production	LCCC (FK) | 20	55 | TUBE	No	SNPB	N/A for Pkg Type	-55 to 125	5962-9758101Q2A SNJ54F 11FK
5962-9758101QCA	Active	Production	CDIP (J) | 14	25 | TUBE	No	SNPB	N/A for Pkg Type	-55 to 125	5962-9758101QCA SNJ54F11J
5962-9758101QDA	Active	Production	CFP (W) | 14	25 | TUBE	No	SNPB	N/A for Pkg Type	-55 to 125	5962-9758101QDA SNJ54F11W
JM38510/34002B2A	Active	Production	LCCC (FK) | 20	55 | TUBE	No	SNPB	N/A for Pkg Type	-55 to 125	JM38510/34002B2A
JM38510/34002B2A.A	Active	Production	LCCC (FK) | 20	55 | TUBE	No	SNPB	N/A for Pkg Type	-55 to 125	JM38510/34002B2A
JM38510/34002BCA	Active	Production	CDIP (J) | 14	25 | TUBE	No	SNPB	N/A for Pkg Type	-55 to 125	JM38510/34002BCA
JM38510/34002BCA.A	Active	Production	CDIP (J) | 14	25 | TUBE	No	SNPB	N/A for Pkg Type	-55 to 125	JM38510/34002BCA
JM38510/34002BDA	Active	Production	CFP (W) | 14	25 | TUBE	No	SNPB	N/A for Pkg Type	-55 to 125	JM38510/34002BDA
JM38510/34002BDA.A	Active	Production	CFP (W) | 14	25 | TUBE	No	SNPB	N/A for Pkg Type	-55 to 125	JM38510/34002BDA
M38510/34002B2A	Active	Production	LCCC (FK) | 20	55 | TUBE	No	SNPB	N/A for Pkg Type	-55 to 125	JM38510/34002B2A
M38510/34002BCA	Active	Production	CDIP (J) | 14	25 | TUBE	No	SNPB	N/A for Pkg Type	-55 to 125	JM38510/34002BCA
M38510/34002BDA	Active	Production	CFP (W) | 14	25 | TUBE	No	SNPB	N/A for Pkg Type	-55 to 125	JM38510/34002BDA
SN54F11J	Active	Production	CDIP (J) | 14	25 | TUBE	No	SNPB	N/A for Pkg Type	-55 to 125	SN54F11J
SN54F11J.A	Active	Production	CDIP (J) | 14	25 | TUBE	No	SNPB	N/A for Pkg Type	-55 to 125	SN54F11J
SN74F11D	Obsolete	Production	SOIC (D) | 14	-	-	Call TI	Call TI	0 to 70	F11
SN74F11DR	Active	Production	SOIC (D) | 14	2500 | LARGE T&R	Yes	NIPDAU	Level-1-260C-UNLIM	0 to 70	F11
SN74F11DR.A	Active	Production	SOIC (D) | 14	2500 | LARGE T&R	Yes	NIPDAU	Level-1-260C-UNLIM	0 to 70	F11

Orderable part number	Status (1)	Material type (2)	Package | Pins	Package qty | Carrier	RoHS (3)	Lead finish/ Ball material (4)	MSL rating/ Peak reflow (5)	Op temp (°C)	Part marking (6)
SN74F11N	Active	Production	PDIP (N) | 14	25 | TUBE	Yes	NIPDAU	N/A for Pkg Type	0 to 70	SN74F11N
SN74F11N.A	Active	Production	PDIP (N) | 14	25 | TUBE	Yes	NIPDAU	N/A for Pkg Type	0 to 70	SN74F11N
SN74F11NSR	Active	Production	SOP (NS) | 14	2000 | LARGE T&R	Yes	NIPDAU	Level-1-260C-UNLIM	0 to 70	74F11
SN74F11NSR.A	Active	Production	SOP (NS) | 14	2000 | LARGE T&R	Yes	NIPDAU	Level-1-260C-UNLIM	0 to 70	74F11
SNJ54F11FK	Active	Production	LCCC (FK) | 20	55 | TUBE	No	SNPB	N/A for Pkg Type	-55 to 125	5962-9758101Q2A SNJ54F 11FK
SNJ54F11FK.A	Active	Production	LCCC (FK) | 20	55 | TUBE	No	SNPB	N/A for Pkg Type	-55 to 125	5962-9758101Q2A SNJ54F 11FK
SNJ54F11J	Active	Production	CDIP (J) | 14	25 | TUBE	No	SNPB	N/A for Pkg Type	-55 to 125	5962-9758101QC A SNJ54F11J
SNJ54F11J.A	Active	Production	CDIP (J) | 14	25 | TUBE	No	SNPB	N/A for Pkg Type	-55 to 125	5962-9758101QC A SNJ54F11J
SNJ54F11W	Active	Production	CFP (W) | 14	25 | TUBE	No	SNPB	N/A for Pkg Type	-55 to 125	5962-9758101QD A SNJ54F11W
SNJ54F11W.A	Active	Production	CFP (W) | 14	25 | TUBE	No	SNPB	N/A for Pkg Type	-55 to 125	5962-9758101QD A SNJ54F11W

(1) **Status:** For more details on status, see our product life cycle.

(2) **Material type:** When designated, preproduction parts are prototypes/experimental devices, and are not yet approved or released for full production. Testing and final process, including without limitation quality assurance, reliability performance testing, and/or process qualification, may not yet be complete, and this item is subject to further changes or possible discontinuation. If available for ordering, purchases will be subject to an additional waiver at checkout, and are intended for early internal evaluation purposes only. These items are sold without warranties of any kind.

(3) **RoHS values:** Yes, No, RoHS Exempt. See the TI RoHS Statement for additional information and value definition.

(4) **Lead finish/Ball material:** Parts may have multiple material finish options. Finish options are separated by a vertical ruled line. Lead finish/Ball material values may wrap to two lines if the finish value exceeds the maximum column width.

(5) **MSL rating/Peak reflow:** The moisture sensitivity level ratings and peak solder (reflow) temperatures. In the event that a part has multiple moisture sensitivity ratings, only the lowest level per JEDEC standards is shown. Refer to the shipping label for the actual reflow temperature that will be used to mount the part to the printed circuit board.

(6) **Part marking:** There may be an additional marking, which relates to the logo, the lot trace code information, or the environmental category of the part.

Multiple part markings will be inside parentheses. Only one part marking contained in parentheses and separated by a "~" will appear on a part. If a line is indented then it is a continuation of the previous line and the two combined represent the entire part marking for that device.

Important Information and Disclaimer: The information provided on this page represents TI's knowledge and belief as of the date that it is provided. TI bases its knowledge and belief on information provided by third parties, and makes no representation or warranty as to the accuracy of such information. Efforts are underway to better integrate information from third parties. TI has taken and continues to take reasonable steps to provide representative and accurate information but may not have conducted destructive testing or chemical analysis on incoming materials and chemicals. TI and TI suppliers consider certain information to be proprietary, and thus CAS numbers and other limited information may not be available for release.

In no event shall TI's liability arising out of such information exceed the total purchase price of the TI part(s) at issue in this document sold by TI to Customer on an annual basis.

OTHER QUALIFIED VERSIONS OF SN54F11, SN74F11 :

- Catalog : SN74F11
- Military : SN54F11

NOTE: Qualified Version Definitions:

- Catalog - TI's standard catalog product
- Military - QML certified for Military and Defense Applications

TAPE AND REEL INFORMATION

REEL DIMENSIONS

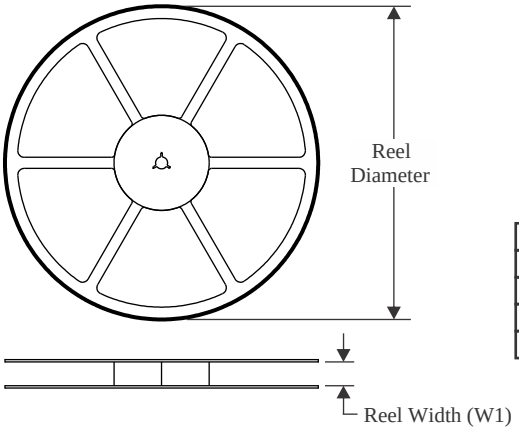

TAPE DIMENSIONS

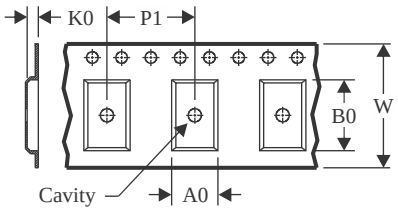

A0	Dimension designed to accommodate the component width
B0	Dimension designed to accommodate the component length
K0	Dimension designed to accommodate the component thickness
W	Overall width of the carrier tape
P1	Pitch between successive cavity centers

QUADRANT ASSIGNMENTS FOR PIN 1 ORIENTATION IN TAPE

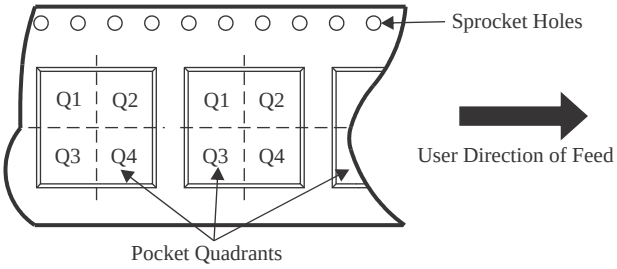

*All dimensions are nominal

Device	Package Type	Package Drawing	Pins	SPQ	Reel Diameter (mm)	Reel Width W1 (mm)	A0 (mm)	B0 (mm)	K0 (mm)	P1 (mm)	W (mm)	Pin1 Quadrant
SN74F11DR	SOIC	D	14	2500	330.0	16.4	6.5	9.0	2.1	8.0	16.0	Q1
SN74F11NSR	SOP	NS	14	2000	330.0	16.4	8.1	10.4	2.5	12.0	16.0	Q1

TAPE AND REEL BOX DIMENSIONS

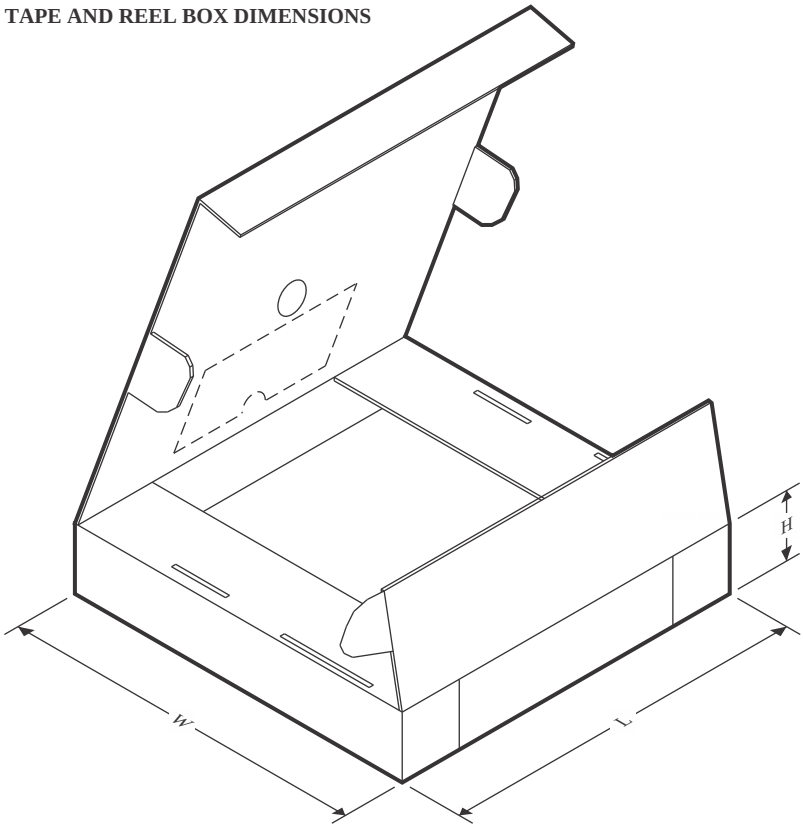

*All dimensions are nominal

Device	Package Type	Package Drawing	Pins	SPQ	Length (mm)	Width (mm)	Height (mm)
SN74F11DR	SOIC	D	14	2500	353.0	353.0	32.0
SN74F11NSR	SOP	NS	14	2000	353.0	353.0	32.0

TUBE

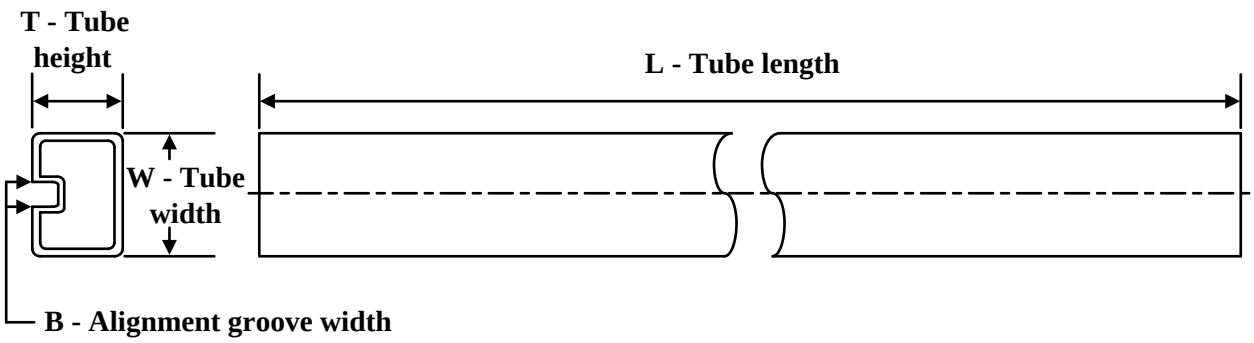

*All dimensions are nominal

Device	Package Name	Package Type	Pins	SPQ	L (mm)	W (mm)	T (µm)	B (mm)
5962-9758101Q2A	FK	LCCC	20	55	506.98	12.06	2030	NA
5962-9758101QDA	W	CFP	14	25	506.98	26.16	6220	NA
JM38510/34002B2A	FK	LCCC	20	55	506.98	12.06	2030	NA
JM38510/34002B2A.A	FK	LCCC	20	55	506.98	12.06	2030	NA
JM38510/34002BDA	W	CFP	14	25	506.98	26.16	6220	NA
JM38510/34002BDA.A	W	CFP	14	25	506.98	26.16	6220	NA
M38510/34002B2A	FK	LCCC	20	55	506.98	12.06	2030	NA
M38510/34002BDA	W	CFP	14	25	506.98	26.16	6220	NA
SN74F11N	N	PDIP	14	25	506	13.97	11230	4.32
SN74F11N	N	PDIP	14	25	506	13.97	11230	4.32
SN74F11N.A	N	PDIP	14	25	506	13.97	11230	4.32
SN74F11N.A	N	PDIP	14	25	506	13.97	11230	4.32
SNJ54F11FK	FK	LCCC	20	55	506.98	12.06	2030	NA
SNJ54F11FK.A	FK	LCCC	20	55	506.98	12.06	2030	NA
SNJ54F11W	W	CFP	14	25	506.98	26.16	6220	NA
SNJ54F11W.A	W	CFP	14	25	506.98	26.16	6220	NA

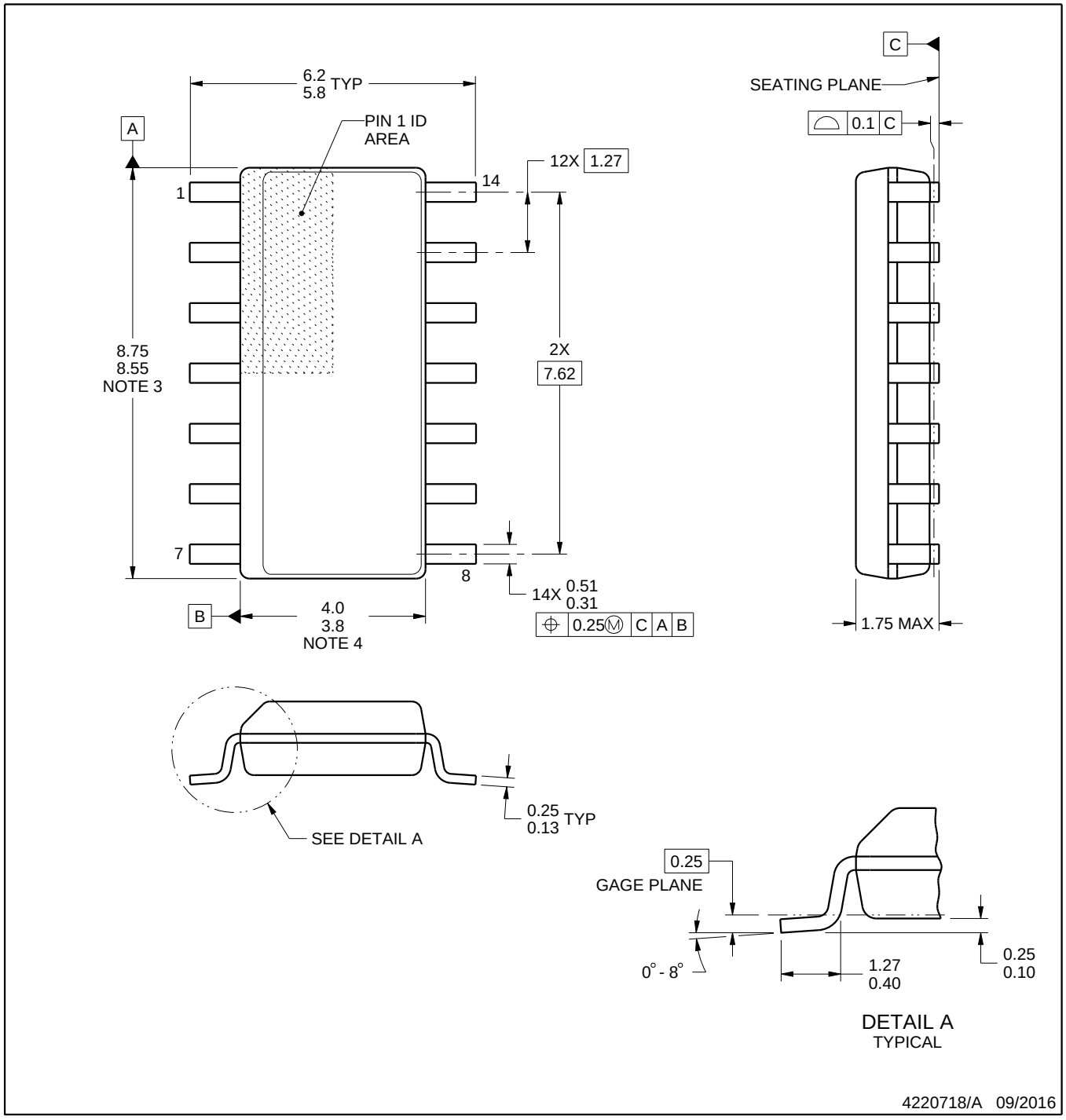

NOTES:

1. All linear dimensions are in millimeters. Dimensions in parenthesis are for reference only. Dimensioning and tolerancing per ASME Y14.5M.
2. This drawing is subject to change without notice.
3. This dimension does not include mold flash, protrusions, or gate burrs. Mold flash, protrusions, or gate burrs shall not exceed 0.15 mm, per side.
4. This dimension does not include interlead flash. Interlead flash shall not exceed 0.43 mm, per side.
5. Reference JEDEC registration MS-012, variation AB.

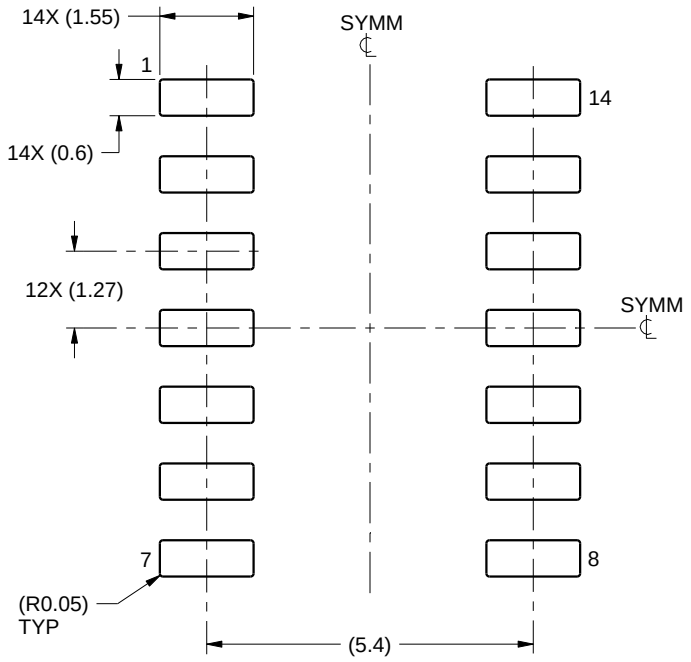

LAND PATTERN EXAMPLE
SCALE:8X

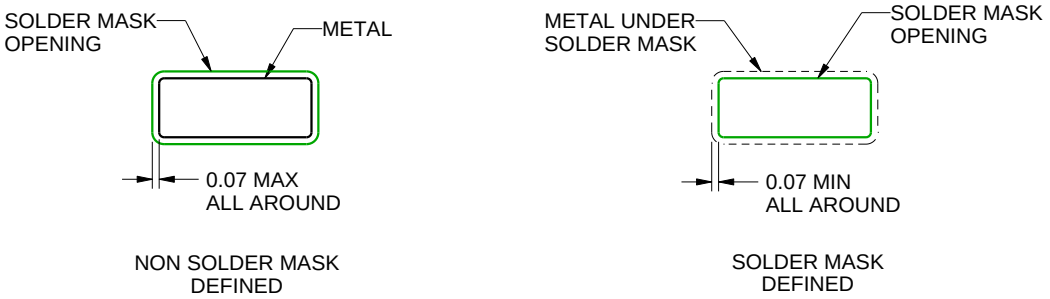

SOLDER MASK DETAILS

4220718/A 09/2016

NOTES: (continued)

6. Publication IPC-7351 may have alternate designs.
7. Solder mask tolerances between and around signal pads can vary based on board fabrication site.

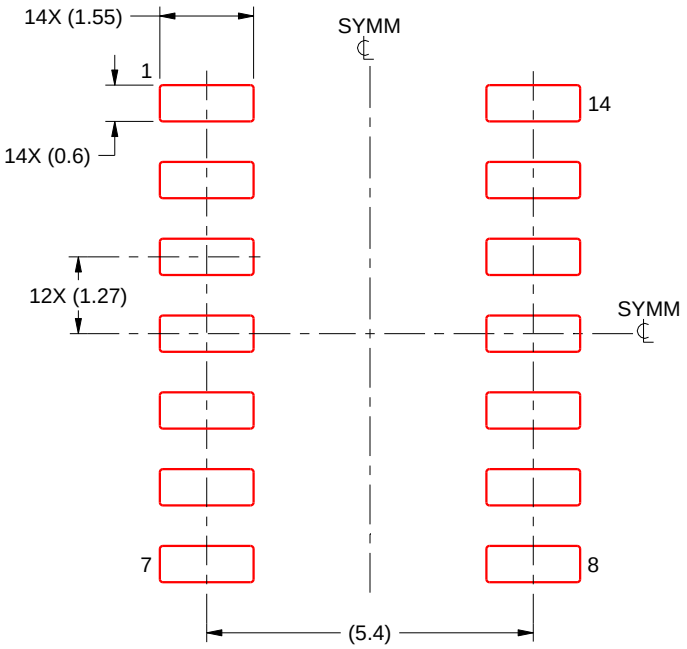

SOLDER PASTE EXAMPLE
BASED ON 0.125 mm THICK STENCIL
SCALE:8X

4220718/A 09/2016

NOTES: (continued)

8. Laser cutting apertures with trapezoidal walls and rounded corners may offer better paste release. IPC-7525 may have alternate design recommendations.
9. Board assembly site may have different recommendations for stencil design.

MECHANICAL DATA

NS (R-PDSO-G)** **PLASTIC SMALL-OUTLINE PACKAGE**

14-PINS SHOWN

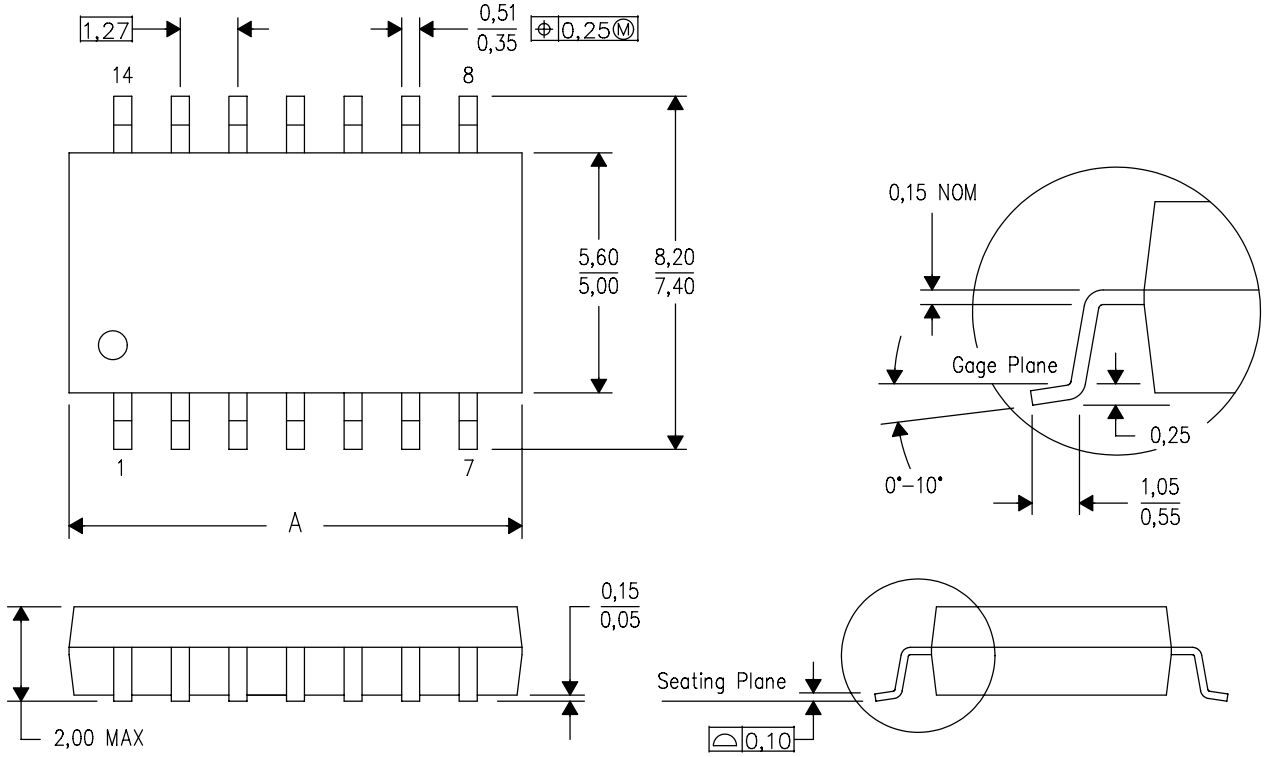

DIM \ PINS **	14	16	20	24
A MAX	10,50	10,50	12,90	15,30
A MIN	9,90	9,90	12,30	14,70

4040062/C 03/03

NOTES:
A. All linear dimensions are in millimeters.
B. This drawing is subject to change without notice.
C. Body dimensions do not include mold flash or protrusion, not to exceed 0,15.

W (R–GDFP–F14) CERAMIC DUAL FLATPACK

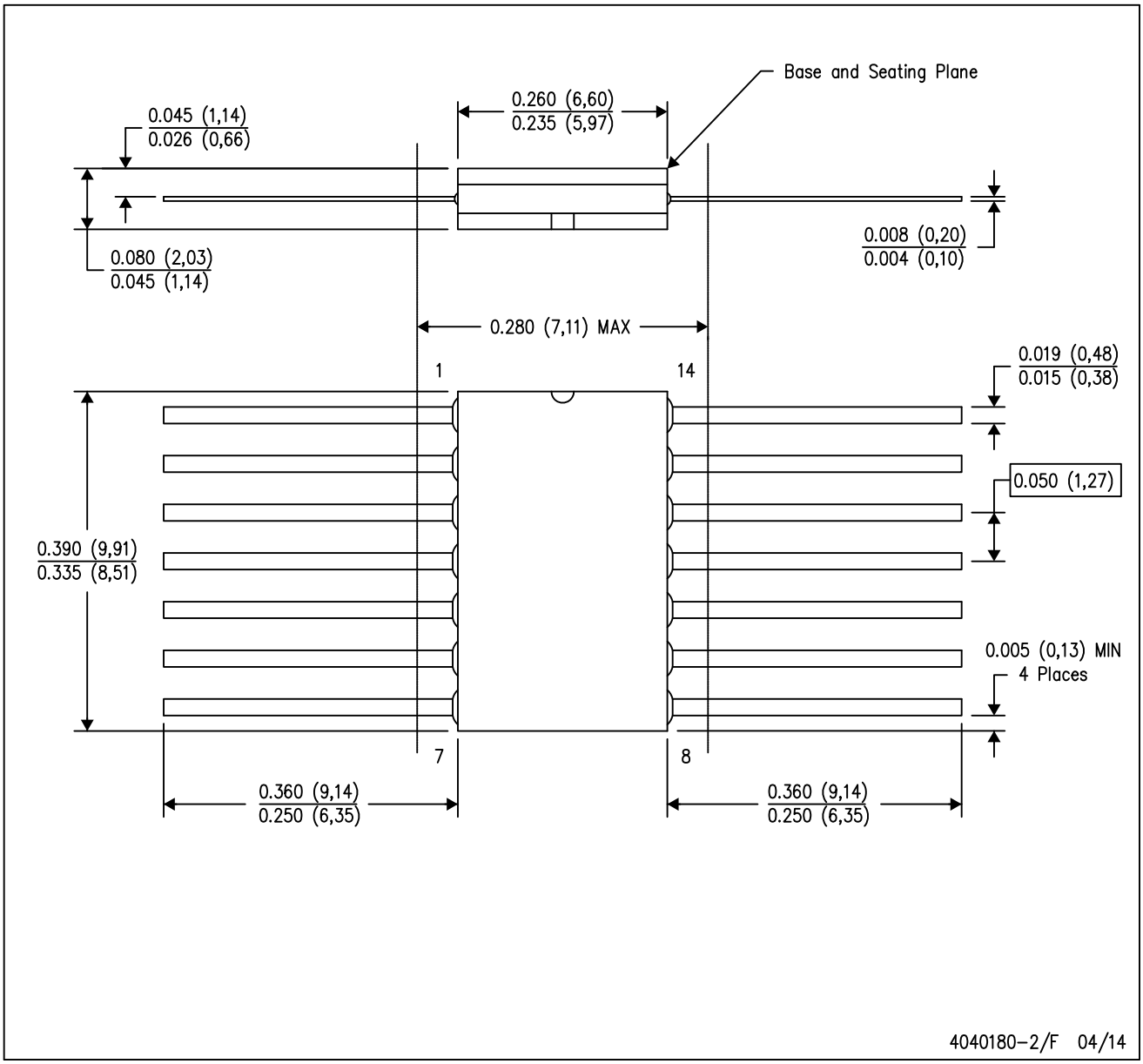

NOTES:
A. All linear dimensions are in inches (millimeters).
B. This drawing is subject to change without notice.
C. This package can be hermetically sealed with a ceramic lid using glass frit.
D. Index point is provided on cap for terminal identification only.
E. Falls within MIL STD 1835 GDFP1–F14

GENERIC PACKAGE VIEW

FK 20

LCCC - 2.03 mm max height

8.89 x 8.89, 1.27 mm pitch

LEADLESS CERAMIC CHIP CARRIER

This image is a representation of the package family, actual package may vary.
Refer to the product data sheet for package details.

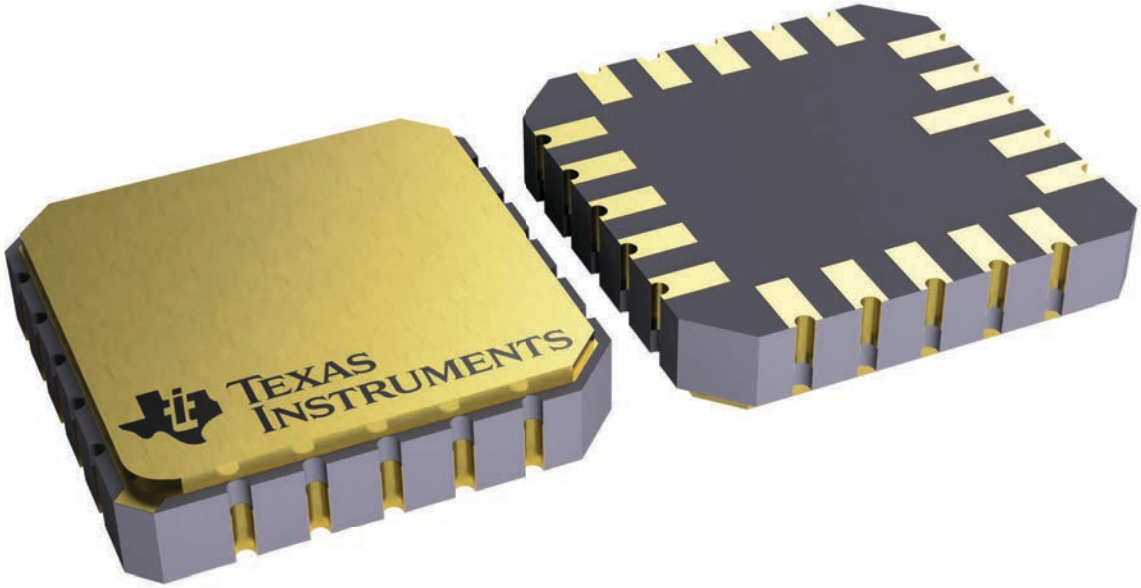

4229370VA\

J 14 CDIP - 5.08 mm max height

CERAMIC DUAL IN LINE PACKAGE

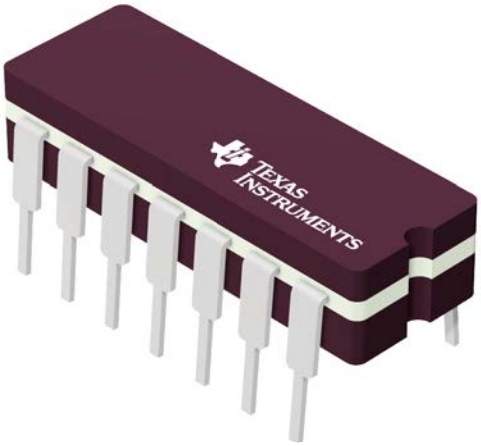

Images above are just a representation of the package family, actual package may vary.
Refer to the product data sheet for package details.

4040083-5/G

PACKAGE OUTLINE

J0014A

CDIP - 5.08 mm max height

CERAMIC DUAL IN LINE PACKAGE

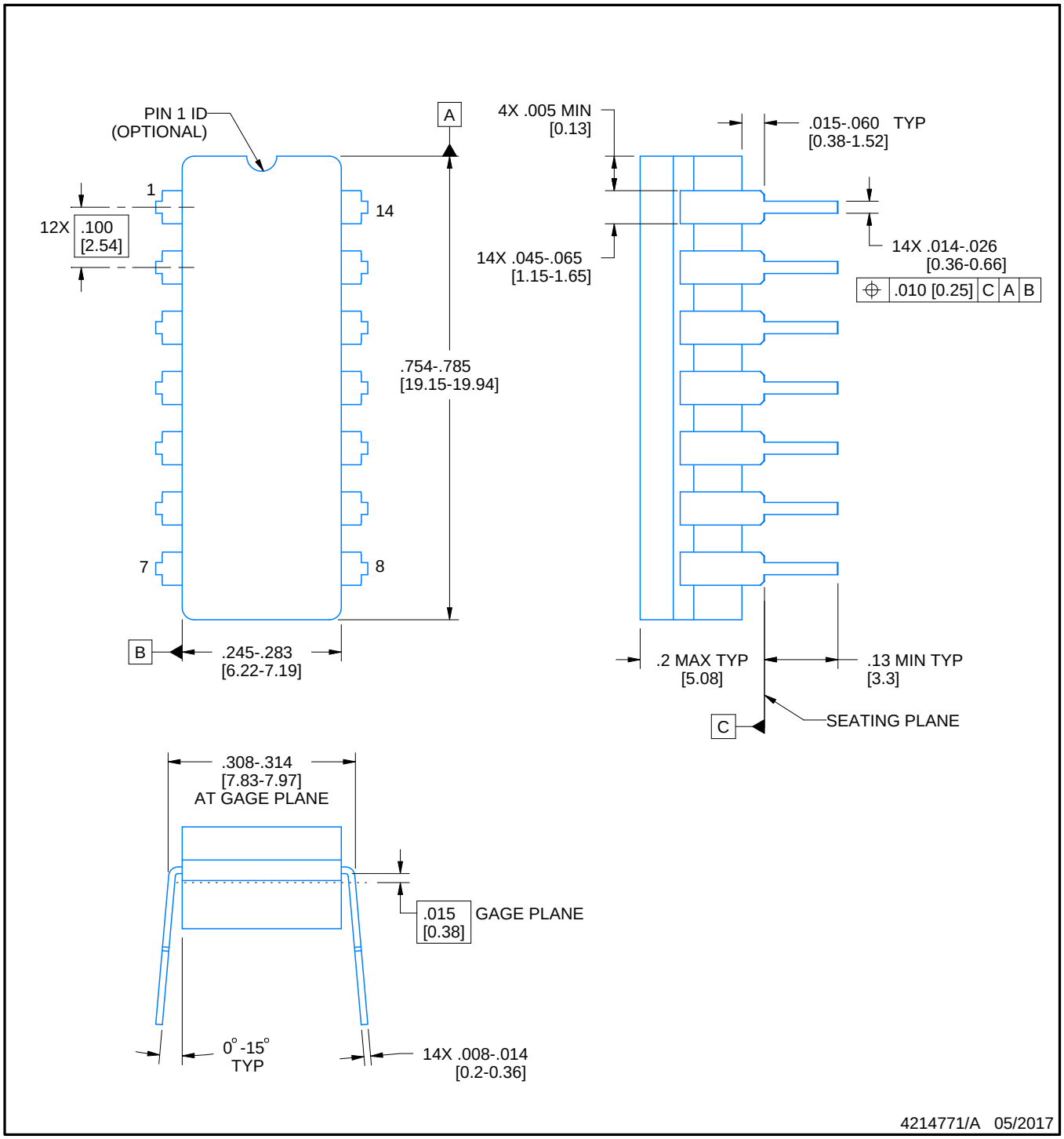

NOTES:

1. All controlling linear dimensions are in inches. Dimensions in brackets are in millimeters. Any dimension in brackets or parenthesis are for reference only. Dimensioning and tolerancing per ASME Y14.5M.
2. This drawing is subject to change without notice.
3. This package is hermitically sealed with a ceramic lid using glass frit.
4. Index point is provided on cap for terminal identification only and on press ceramic glass frit seal only.
5. Falls within MIL-STD-1835 and GDIP1-T14.

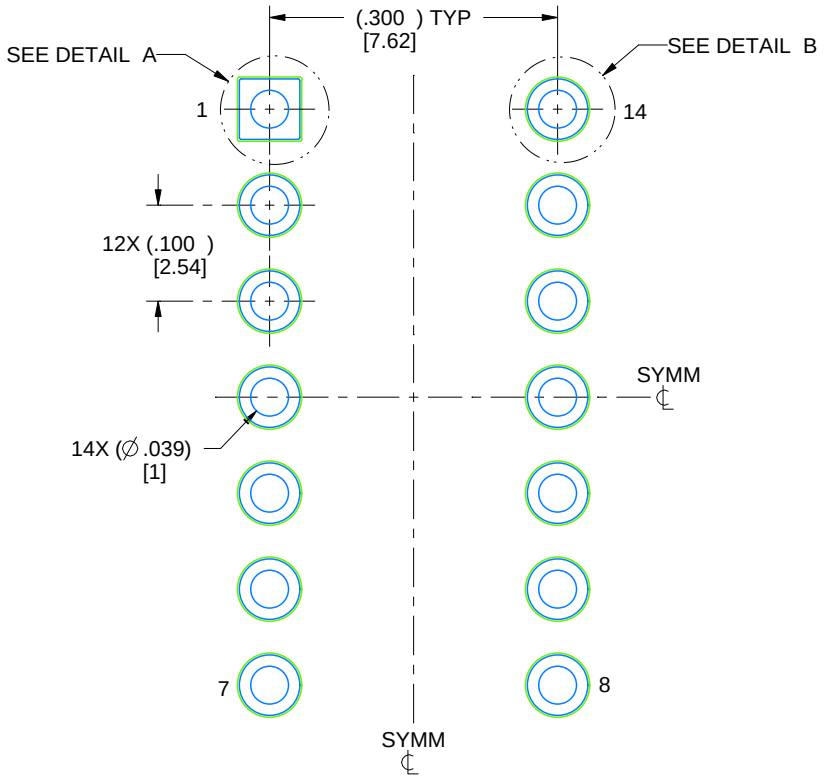

LAND PATTERN EXAMPLE
NON-SOLDER MASK DEFINED
SCALE: 5X

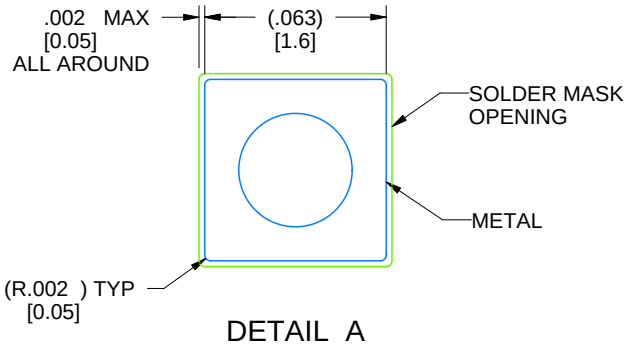

DETAIL A
SCALE: 15X

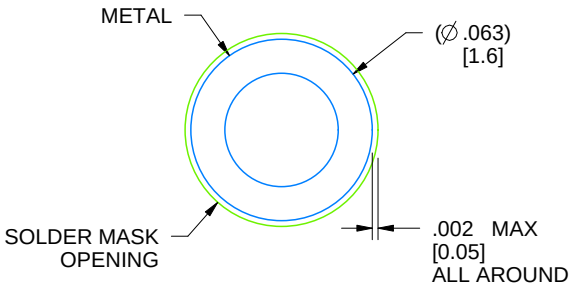

DETAIL B
13X, SCALE: 15X

4214771/A 05/2017

N (R–PDIP–T**) PLASTIC DUAL–IN–LINE PACKAGE

16 PINS SHOWN

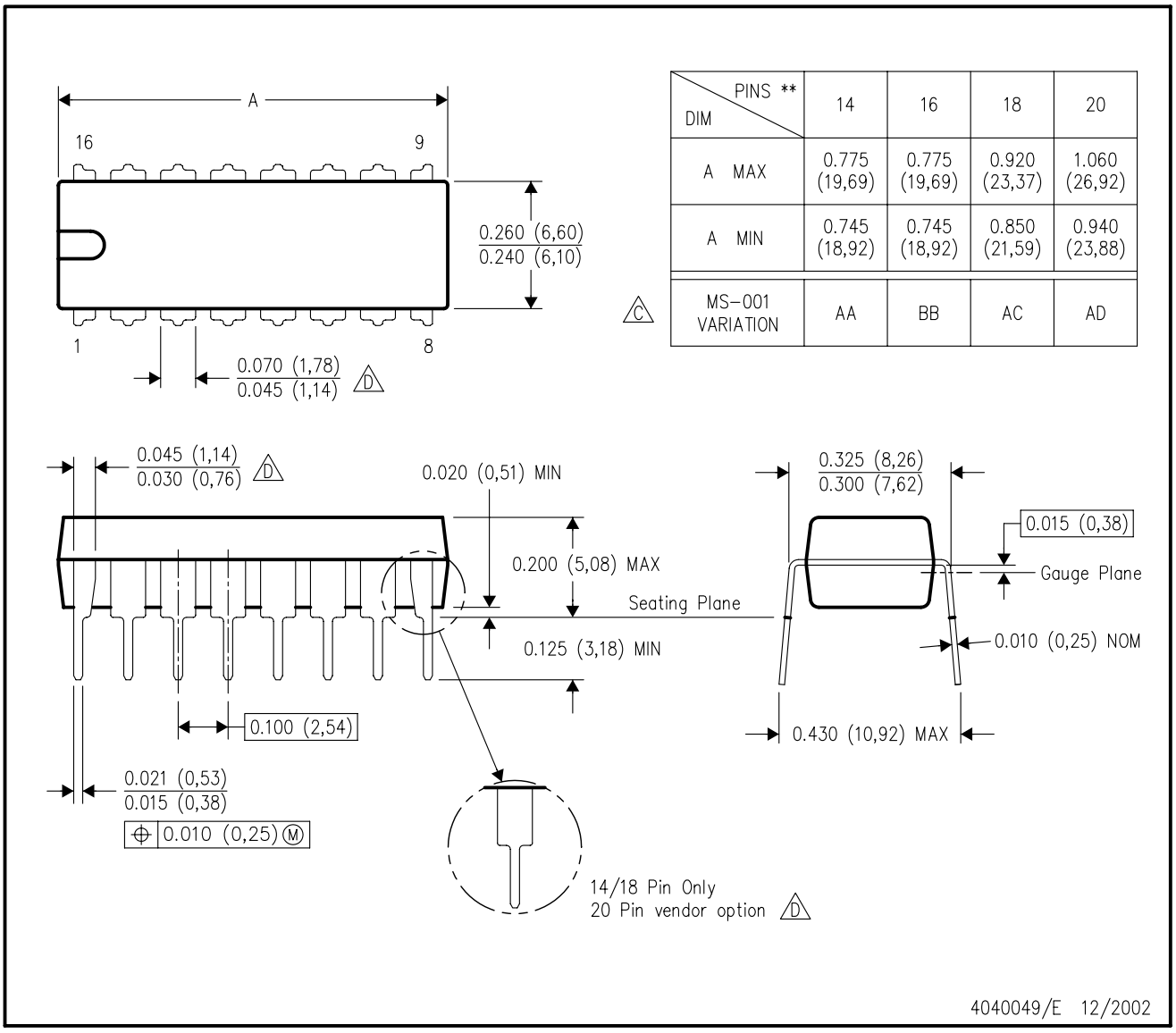

DIM \ PINS **	14	16	18	20
A MAX	0.775 (19,69)	0.775 (19,69)	0.920 (23,37)	1.060 (26,92)
A MIN	0.745 (18,92)	0.745 (18,92)	0.850 (21,59)	0.940 (23,88)
MS–001 VARIATION (C)	AA	BB	AC	AD

NOTES:
A. All linear dimensions are in inches (millimeters).
B. This drawing is subject to change without notice.
C. Falls within JEDEC MS–001, except 18 and 20 pin minimum body length (Dim A).
D. The 20 pin end lead shoulder width is a vendor option, either half or full width.

IMPORTANT NOTICE AND DISCLAIMER

TI PROVIDES TECHNICAL AND RELIABILITY DATA (INCLUDING DATASHEETS), DESIGN RESOURCES (INCLUDING REFERENCE DESIGNS), APPLICATION OR OTHER DESIGN ADVICE, WEB TOOLS, SAFETY INFORMATION, AND OTHER RESOURCES “AS IS” AND WITH ALL FAULTS, AND DISCLAIMS ALL WARRANTIES, EXPRESS AND IMPLIED, INCLUDING WITHOUT LIMITATION ANY IMPLIED WARRANTIES OF MERCHANTABILITY, FITNESS FOR A PARTICULAR PURPOSE OR NON-INFRINGEMENT OF THIRD PARTY INTELLECTUAL PROPERTY RIGHTS.

These resources are intended for skilled developers designing with TI products. You are solely responsible for (1) selecting the appropriate TI products for your application, (2) designing, validating and testing your application, and (3) ensuring your application meets applicable standards, and any other safety, security, regulatory or other requirements.

These resources are subject to change without notice. TI grants you permission to use these resources only for development of an application that uses the TI products described in the resource. Other reproduction and display of these resources is prohibited. No license is granted to any other TI intellectual property right or to any third party intellectual property right. TI disclaims responsibility for, and you fully indemnify TI and its representatives against any claims, damages, costs, losses, and liabilities arising out of your use of these resources.

TI’s products are provided subject to TI’s Terms of Sale, TI’s General Quality Guidelines, or other applicable terms available either on ti.com or provided in conjunction with such TI products. TI’s provision of these resources does not expand or otherwise alter TI’s applicable warranties or warranty disclaimers for TI products. Unless TI explicitly designates a product as custom or customer-specified, TI products are standard, catalog, general purpose devices.

TI objects to and rejects any additional or different terms you may propose.

Copyright © 2026, Texas Instruments Incorporated

Last updated 10/2025