SNx4HC251 Data Selectors/Multiplexers With 3-State Outputs

1 Features

- 3-state version of ’HC151
- Wide operating voltage range of 2 V to 6 V
- High-current 3-state outputs interface directly with system bus or can drive up to 15 LSTTL loads
- Low power consumption, 80-µA max I_{CC}
- Typical t_{pd} = 9 ns
- ±6-mA output drive at 5 V
- Low input current of 1 µA max
- Perform parallel-to-serial conversion
- Complementary outputs provide true and inverted data

2 Description

The SNx4HC251 is a data selector/multiplexer containing full binary decoding to select 1-of-8 data sources and features strobe-controlled complementary 3-state outputs.

Device Information

PART NUMBER	PACKAGE(1)	BODY SIZE (NOM)
SN74HC251D	SOIC (16)	9.90 mm × 3.90 mm
SN74HC251DB	SSOP (16)	6.20 mm × 5.30 mm
SN74HC251N	PDIP (16)	19.31 mm × 6.35 mm
SN74HC251NS	SO (16)	6.20 mm × 5.30 mm
SN74HC251PW	TSSOP (16)	5.00 mm × 4.40 mm
SN54HC251J	CDIP (16)	24.38 mm × 6.92 mm
SNJ54HC251FK	LCCC (20)	8.89 mm × 8.45 mm

(1) For all available packages, see the orderable addendum at the end of the data sheet.

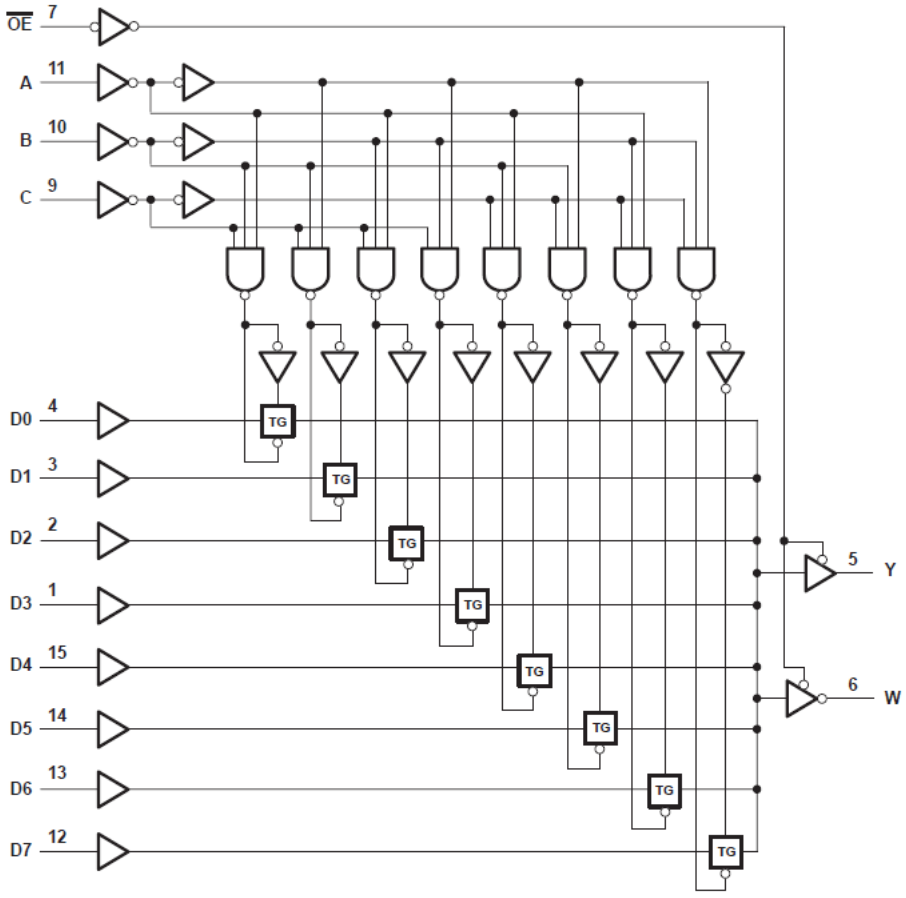

Pin numbers shown are for the D, DB, J, N, NS, PW, and W packages.

Functional Block Diagram

An IMPORTANT NOTICE at the end of this data sheet addresses availability, warranty, changes, use in safety-critical applications, intellectual property matters and other important disclaimers. PRODUCTION DATA.

Table of Contents

1 Features....1
2 Description....1
3 Revision History....2
4 Pin Configuration and Functions....3
5 Specifications....4
5.1 Absolute Maximum Ratings....4
5.2 Recommended Operating Conditions(1)....4
5.3 Thermal Information....4
5.4 Electrical Characteristics....5
5.5 Switching Characteristics....5
5.6 Switching Characteristics....6
5.7 Operating Characteristics....6
6 Parameter Measurement Information....7
7 Detailed Description....8
7.1 Overview....8
7.2 Functional Block Diagram....8
7.3 Device Functional Modes....9
8 Power Supply Recommendations....10
9 Layout....10
9.1 Layout Guidelines....10
10 Device and Documentation Support....11
10.1 Receiving Notification of Documentation Updates....11
10.2 Support Resources....11
10.3 Trademarks....11
10.4 Electrostatic Discharge Caution....11
10.5 Glossary....11
11 Mechanical, Packaging, and Orderable Information....11

3 Revision History

NOTE: Page numbers for previous revisions may differ from page numbers in the current version.

Changes from Revision E (September 2003) to Revision F (February 2022)	Page
• Updated the numbering, formatting, tables, figures, and cross-refrences throughout the document to reflect modern data sheet standards	1

Copyright © 2022 Texas Instruments Incorporated

4 Pin Configuration and Functions

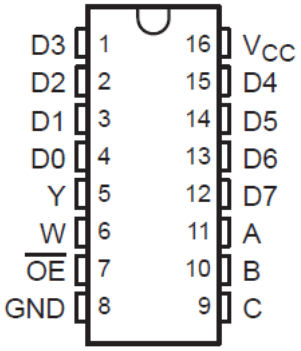

J, D, DB, N, NS, or PW Package
16-Pin CDIP, SOIC, SSOP, PDIP, SO, or TSSOP
Top View

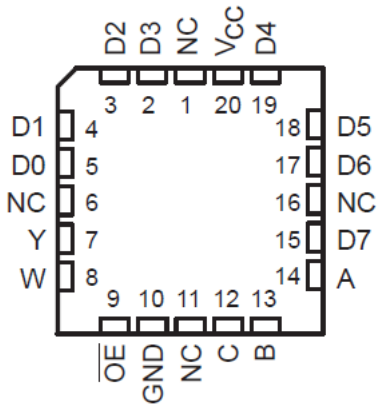

NC - No internal connection

FK Package
20-Pin LCCC
Top View

5 Specifications

5.1 Absolute Maximum Ratings

over operating free-air temperature range (unless otherwise noted)(1)

			MIN	MAX	UNIT
V_{CC}	Supply voltage range		–0.5	7	V
I_{IK}	Input clamp current(2)	$V_I < 0$ or $V_I > V_{CC}$		±20	mA
I_{OK}	Output clamp current(2)	$V_O < 0$ or $V_O > V_{CC}$		±20	mA
I_O	Continuous output current	$V_O = 0$ to V_{CC}		±35	mA
	Continuous current through V_{CC} or GND			±70	mA
T_J	Junction temperature			150	°C
T_{stg}	Storage temperature		–65	150	°C

(1) Stresses beyond those listed under *absolute maximum ratings* may cause permanent damage to the device. These are stress ratings only and functional operation of the device at these or any other conditions beyond those indicated under *recommended operating conditions* is not implied. Exposure to absolute-maximum-rated conditions for extended periods may affect device reliability.
(2) The input and output voltage ratings may be exceeded if the input and output current ratings are observed.

5.2 Recommended Operating Conditions(1)

			SN54HC251			SN74HC251			UNIT
			MIN	NOM	MAX	MIN	NOM	MAX	
V_{CC}	Supply voltage		2	5	6	2	5	6	V
V_{IH}	High-level input voltage	V_{CC} = 2 V	1.5			1.5			V
		V_{CC} = 4.5 V	3.15			3.15			
		V_{CC} = 6 V	4.2			4.2			
V_{IL}	Low-level input voltage	V_{CC} = 2 V			0.5			0.5	V
		V_{CC} = 4.5 V			1.35			1.35	
		V_{CC} = 6 V			1.8			1.8	
V_I	Input voltage		0		V_{CC}	0		V_{CC}	V
V_O	Output voltage		0		V_{CC}	0		V_{CC}	V
Δt/Δv	Input transition rise/fall time	V_{CC} = 2 V			1000			1000	ns
		V_{CC} = 4.5 V			500			500	
		V_{CC} = 6 V			400			400	
T_A	Operating free-air temperature		−55		125	−40		85	°C

(1) All unused inputs of the device must be held at V_{CC} or GND to ensure proper device operation. Refer to the TI application report, *Implications of Slow or Floating CMOS Inputs*, literature number SCBA004.

5.3 Thermal Information

THERMAL METRIC(1)		D (SOIC) 16 PINS	DB (SSOP) 16 PINS	N (PDIP) 16 PINS	NS (SO) 16 PINS	PW (TSSOP) 16 PINS	UNIT
$R_{\theta JA}$	Junction-to-ambient thermal resistance	73	82	67	64	108	°C/W

(1) For more information about traditional and new thermal metrics, see the *Semiconductor and IC package thermal metrics* application report.

Copyright © 2022 Texas Instruments Incorporated

5.4 Electrical Characteristics

over recommended operating free-air temperature range (unless otherwise noted)

PARAMETER	TEST CONDITIONS[1]	V_{CC} (V)	T_A = 25°C			SN54HC251		SN74HC251		UNIT
			MIN	TYP	MAX	MIN	MAX	MIN	MAX	
V_{OH}	I_{OH} = −20 µA	2	1.9	1.998		1.9		1.9		V
		4.5	4.4	4.499		4.4		4.4		
		6	5.9	5.999		5.9		5.9		
	I_{OH} = −6 mA	4.5	3.98	4.3		3.7		3.84		
	I_{OH} = −7.8 mA	6	5.48	5.8		5.2		5.34		
V_{OL}	I_{OL} = 20 µA	2		0.002	0.1		0.1		0.1	V
		4.5		0.001	0.1		0.1		0.1	
		6		0.001	0.1		0.1		0.1	
	I_{OL} = 6 mA	4.5		0.17	0.26		0.4		0.33	
	I_{OL} = 7.8 mA	6		0.15	0.26		0.4		0.33	
I_I	V_I = V_{CC} or 0	6		±0.1	±100		±1000		±1000	nA
I_{OZ}	V_o = V_{CC} or 0	6		±0.01	±0.5		±10		±5	µA
I_{CC}	V_I = V_{CC} or 0, I_O = 0	6			8		160		80	µA
C_i		2 to 6		3	10		10		10	pF

(1) V_I = V_{IH} or V_{IL}, unless otherwise noted.

5.5 Switching Characteristics

over recommended operating free-air temperature range, C_L = 50 pF (unless otherwise noted) (see Figure 6-1)

PARAMETER	FROM (INPUT)	TO (OUTPUT)	V_{CC} (V)	T_A = 25°C			SN54HC251		SN74HC251		UNIT
				MIN	TYP	MAX	MIN	MAX	MIN	MAX	
t_{pd}	A, B, or C	W or Y	2		58	205		300		256	ns
			4.5		21	41		60		51	
			6		19	35		51		44	
	Any D	W or Y	2		44	195		283		244	
			4.5		17	39		57		49	
			6		15	33		48		41	
t_{en}	$\overline{OE}$	W or Y	2		30	145		210		181	ns
			4.5		10	29		42		36	
			6		9	25		36		31	
t_{dis}	$\overline{OE}$	W or Y	2		25	195		283		244	ns
			4.5		15	39		57		49	
			6		14	33		48		41	
t_t		W or Y	2		20	75		110		95	ns
			4.5		8	15		22		19	
			6		6	13		19		16	

Copyright © 2022 Texas Instruments Incorporated

5.6 Switching Characteristics

over recommended operating free-air temperature range, C_L = 150 pF (unless otherwise noted) (see Figure 6-1)

PARAMETER	FROM (INPUT)	TO (OUTPUT)	V_{CC} (V)	T_A = 25°C			SN54HC251		SN74HC251		UNIT
				MIN	TYP	MAX	MIN	MAX	MIN	MAX	
t_{pd}	A, B, or C	W or Y	2		72	300		450		375	ns
			4.5		25	60		90		75	
			6		22	52		77		65	
	Any D	W or Y	2		59	300		450		375	
			4.5		21	60		90		75	
			6		18	52		77		65	
t_{en}	$\overline{OE}$	W or Y	2		50	230		340		285	ns
			4.5		17	46		68		57	
			6		15	40		58		50	
t_t		W or Y	2		45	210		315		265	ns
			4.5		17	42		63		53	
			6		13	36		53		45	

5.7 Operating Characteristics

T_A = 25°C

PARAMETER		TEST CONDITIONS	TYP	UNIT
C_{pd}	Power dissipation capacitance	No load	70	pF

Copyright © 2022 Texas Instruments Incorporated

6 Parameter Measurement Information

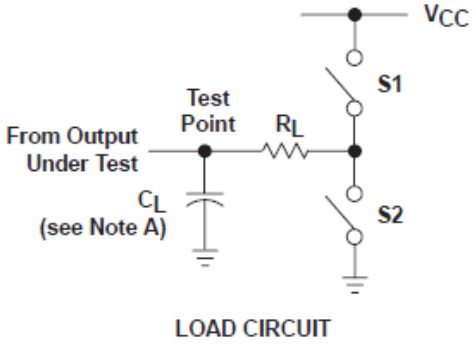

LOAD CIRCUIT

PARAMETER		R_L	C_L	S1	S2
t_{en}	t_{PZH}	1 kΩ	50 pF or 150 pF	Open	Closed
	t_{PZL}			Closed	Open
t_{dis}	t_{PHZ}	1 kΩ	50 pF	Open	Closed
	t_{PLZ}			Closed	Open
t_{pd} or t_t		—	50 pF or 150 pF	Open	Open

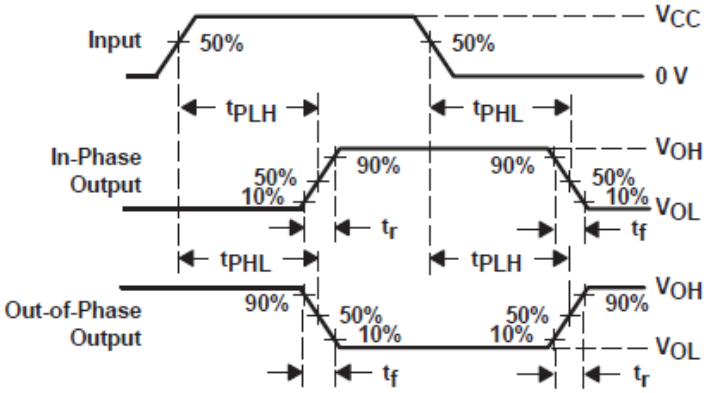

VOLTAGE WAVEFORMS
PROPAGATION DELAY AND OUTPUT TRANSITION TIMES

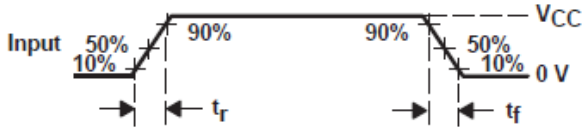

VOLTAGE WAVEFORM
INPUT RISE AND FALL TIMES

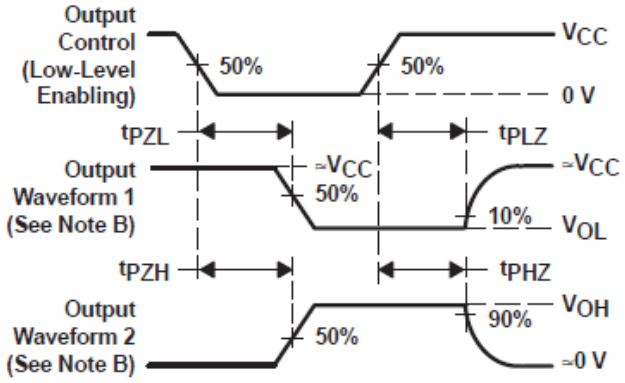

VOLTAGE WAVEFORMS
ENABLE AND DISABLE TIMES FOR 3-STATE OUTPUTS

NOTES: A. C_L includes probe and test-fixture capacitance.
B. Waveform 1 is for an output with internal conditions such that the output is low except when disabled by the output control. Waveform 2 is for an output with internal conditions such that the output is high except when disabled by the output control.
C. Phase relationships between waveforms were chosen arbitrarily. All input pulses are supplied by generators having the following characteristics: PRR ≤ 1 MHz, Z_O = 50 Ω, t_r = 6 ns, t_f = 6 ns.
D. The outputs are measured one at a time with one input transition per measurement.
E. t_{PLZ} and t_{PHZ} are the same as t_{dis}.
F. t_{PZL} and t_{PZH} are the same as t_{en}.
G. t_{PLH} and t_{PHL} are the same as t_{pd}.

Figure 6-1. Load Circuit and Voltage Waveforms

Copyright © 2022 Texas Instruments Incorporated

7 Detailed Description

7.1 Overview

These data selectors/multiplexers contain full binary decoding to select 1-of-8 data sources and feature strobe-controlled complementary 3-state outputs.

The 3-state outputs can interface with and drive data lines of bus-organized systems. With all but one of the common outputs disabled (in the high-impedance state), the low impedance of the single enabled output drives the bus line to a high or low logic level. Both outputs are controlled by the output-enable ($\overline{OE}$) input. The outputs are disabled when $\overline{OE}$ is high.

7.2 Functional Block Diagram

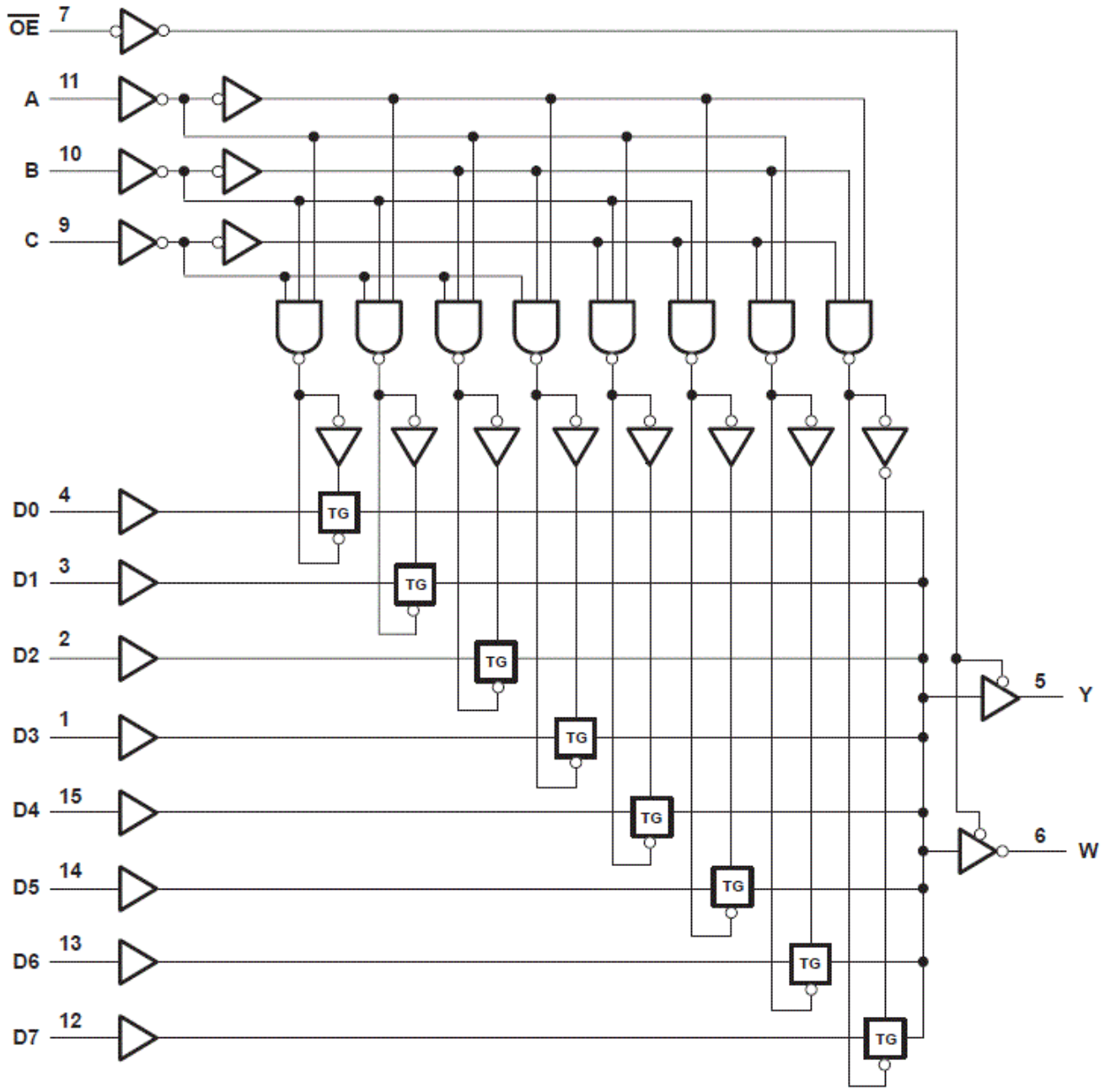

Pin numbers shown are for the D, DB, J, N, NS, PW, and W packages.

Copyright © 2022 Texas Instruments Incorporated

7.3 Device Functional Modes

Table 7-1. Function Table(1)

INPUTS				OUTPUTS	
SELECT			$\overline{OE}$	Y	W
C	B	A			
X	X	X	H	Z	Z
L	L	L	L	D0	$\overline{D0}$
L	L	H	L	D1	$\overline{D1}$
L	H	L	L	D2	$\overline{D2}$
L	H	H	L	D3	$\overline{D3}$
H	L	L	L	D4	$\overline{D4}$
H	L	H	L	D5	$\overline{D5}$
H	H	L	L	D6	$\overline{D6}$
H	H	H	L	D7	$\overline{D7}$

(1) D0, D1 . . . D7 = the level of the respective D input.

Copyright © 2022 Texas Instruments Incorporated

8 Power Supply Recommendations

The power supply can be any voltage between the minimum and maximum supply voltage rating located in the *Recommended Operating Conditions*. Each V_{CC} terminal should have a good bypass capacitor to prevent power disturbance. A 0.1-µF capacitor is recommended for this device. It is acceptable to parallel multiple bypass caps to reject different frequencies of noise. The 0.1-µF and 1-µF capacitors are commonly used in parallel. The bypass capacitor should be installed as close to the power terminal as possible for best results.

9 Layout

9.1 Layout Guidelines

When using multiple-input and multiple-channel logic devices inputs must not ever be left floating. In many cases, functions or parts of functions of digital logic devices are unused; for example, when only two inputs of a triple-input AND gate are used or only 3 of the 4 buffer gates are used. Such unused input pins must not be left unconnected because the undefined voltages at the outside connections result in undefined operational states. All unused inputs of digital logic devices must be connected to a logic high or logic low voltage, as defined by the input voltage specifications, to prevent them from floating. The logic level that must be applied to any particular unused input depends on the function of the device. Generally, the inputs are tied to GND or V_{CC}, whichever makes more sense for the logic function or is more convenient.

Copyright © 2022 Texas Instruments Incorporated

10 Device and Documentation Support

TI offers an extensive line of development tools. Tools and software to evaluate the performance of the device, generate code, and develop solutions are listed below.

10.1 Receiving Notification of Documentation Updates

To receive notification of documentation updates, navigate to the device product folder on ti.com. Click on *Subscribe to updates* to register and receive a weekly digest of any product information that has changed. For change details, review the revision history included in any revised document.

10.2 Support Resources

TI E2E™ support forums are an engineer's go-to source for fast, verified answers and design help — straight from the experts. Search existing answers or ask your own question to get the quick design help you need.

Linked content is provided "AS IS" by the respective contributors. They do not constitute TI specifications and do not necessarily reflect TI's views; see TI's Terms of Use.

10.3 Trademarks

TI E2E™ is a trademark of Texas Instruments.
All trademarks are the property of their respective owners.

10.4 Electrostatic Discharge Caution



This integrated circuit can be damaged by ESD. Texas Instruments recommends that all integrated circuits be handled with appropriate precautions. Failure to observe proper handling and installation procedures can cause damage.

ESD damage can range from subtle performance degradation to complete device failure. Precision integrated circuits may be more susceptible to damage because very small parametric changes could cause the device not to meet its published specifications.

10.5 Glossary

TI Glossary	This glossary lists and explains terms, acronyms, and definitions.

11 Mechanical, Packaging, and Orderable Information

The following pages include mechanical, packaging, and orderable information. This information is the most current data available for the designated devices. This data is subject to change without notice and revision of this document. For browser-based versions of this data sheet, refer to the left-hand navigation.

Copyright © 2022 Texas Instruments Incorporated

PACKAGING INFORMATION

Orderable part number	Status (1)	Material type (2)	Package | Pins	Package qty | Carrier	RoHS (3)	Lead finish/ Ball material (4)	MSL rating/ Peak reflow (5)	Op temp (°C)	Part marking (6)
85125012A	Active	Production	LCCC (FK) | 20	55 | TUBE	No	SNPB	N/A for Pkg Type	-55 to 125	85125012A SNJ54HC 251FK
8512501EA	Active	Production	CDIP (J) | 16	25 | TUBE	No	SNPB	N/A for Pkg Type	-55 to 125	8512501EA SNJ54HC251J
SN54HC251J	Active	Production	CDIP (J) | 16	25 | TUBE	No	SNPB	N/A for Pkg Type	-55 to 125	SN54HC251J
SN54HC251J.A	Active	Production	CDIP (J) | 16	25 | TUBE	No	SNPB	N/A for Pkg Type	-55 to 125	SN54HC251J
SN74HC251D	Obsolete	Production	SOIC (D) | 16	-	-	Call TI	Call TI	-40 to 85	HC251
SN74HC251DBR	Active	Production	SSOP (DB) | 16	2000 | LARGE T&R	Yes	NIPDAU	Level-1-260C-UNLIM	-40 to 85	HC251
SN74HC251DBR.A	Active	Production	SSOP (DB) | 16	2000 | LARGE T&R	Yes	NIPDAU	Level-1-260C-UNLIM	-40 to 85	HC251
SN74HC251DR	Active	Production	SOIC (D) | 16	2500 | LARGE T&R	Yes	NIPDAU | SN	Level-1-260C-UNLIM	-40 to 85	HC251
SN74HC251DR.A	Active	Production	SOIC (D) | 16	2500 | LARGE T&R	Yes	NIPDAU	Level-1-260C-UNLIM	-40 to 85	HC251
SN74HC251DRG4	Active	Production	SOIC (D) | 16	2500 | LARGE T&R	Yes	NIPDAU	Level-1-260C-UNLIM	-40 to 85	HC251
SN74HC251DRG4.A	Active	Production	SOIC (D) | 16	2500 | LARGE T&R	Yes	NIPDAU	Level-1-260C-UNLIM	-40 to 85	HC251
SN74HC251DT	Obsolete	Production	SOIC (D) | 16	-	-	Call TI	Call TI	-40 to 85	HC251
SN74HC251N	Active	Production	PDIP (N) | 16	25 | TUBE	Yes	NIPDAU	N/A for Pkg Type	-40 to 85	SN74HC251N
SN74HC251N.A	Active	Production	PDIP (N) | 16	25 | TUBE	Yes	NIPDAU	N/A for Pkg Type	-40 to 85	SN74HC251N
SN74HC251NSR	Active	Production	SOP (NS) | 16	2000 | LARGE T&R	Yes	NIPDAU	Level-1-260C-UNLIM	-40 to 85	HC251
SN74HC251NSR.A	Active	Production	SOP (NS) | 16	2000 | LARGE T&R	Yes	NIPDAU	Level-1-260C-UNLIM	-40 to 85	HC251
SN74HC251PW	Obsolete	Production	TSSOP (PW) | 16	-	-	Call TI	Call TI	-40 to 85	HC251
SN74HC251PWR	Active	Production	TSSOP (PW) | 16	2000 | LARGE T&R	Yes	NIPDAU | SN	Level-1-260C-UNLIM	-40 to 85	HC251
SN74HC251PWR.A	Active	Production	TSSOP (PW) | 16	2000 | LARGE T&R	Yes	NIPDAU	Level-1-260C-UNLIM	-40 to 85	HC251
SN74HC251PWR1G4	Active	Production	TSSOP (PW) | 16	2000 | LARGE T&R	Yes	NIPDAU	Level-1-260C-UNLIM	-40 to 85	HC251
SN74HC251PWT	Obsolete	Production	TSSOP (PW) | 16	-	-	Call TI	Call TI	-40 to 85	HC251
SNJ54HC251FK	Active	Production	LCCC (FK) | 20	55 | TUBE	No	SNPB	N/A for Pkg Type	-55 to 125	85125012A SNJ54HC 251FK
SNJ54HC251FK.A	Active	Production	LCCC (FK) | 20	55 | TUBE	No	SNPB	N/A for Pkg Type	-55 to 125	85125012A SNJ54HC 251FK

Orderable part number	Status (1)	Material type (2)	Package | Pins	Package qty | Carrier	RoHS (3)	Lead finish/ Ball material (4)	MSL rating/ Peak reflow (5)	Op temp (°C)	Part marking (6)
SNJ54HC251J	Active	Production	CDIP (J) | 16	25 | TUBE	No	SNPB	N/A for Pkg Type	-55 to 125	8512501EA SNJ54HC251J
SNJ54HC251J.A	Active	Production	CDIP (J) | 16	25 | TUBE	No	SNPB	N/A for Pkg Type	-55 to 125	8512501EA SNJ54HC251J

(1) **Status:** For more details on status, see our product life cycle.

(2) **Material type:** When designated, preproduction parts are prototypes/experimental devices, and are not yet approved or released for full production. Testing and final process, including without limitation quality assurance, reliability performance testing, and/or process qualification, may not yet be complete, and this item is subject to further changes or possible discontinuation. If available for ordering, purchases will be subject to an additional waiver at checkout, and are intended for early internal evaluation purposes only. These items are sold without warranties of any kind.

(3) **RoHS values:** Yes, No, RoHS Exempt. See the TI RoHS Statement for additional information and value definition.

(4) **Lead finish/Ball material:** Parts may have multiple material finish options. Finish options are separated by a vertical ruled line. Lead finish/Ball material values may wrap to two lines if the finish value exceeds the maximum column width.

(5) **MSL rating/Peak reflow:** The moisture sensitivity level ratings and peak solder (reflow) temperatures. In the event that a part has multiple moisture sensitivity ratings, only the lowest level per JEDEC standards is shown. Refer to the shipping label for the actual reflow temperature that will be used to mount the part to the printed circuit board.

(6) **Part marking:** There may be an additional marking, which relates to the logo, the lot trace code information, or the environmental category of the part.

Multiple part markings will be inside parentheses. Only one part marking contained in parentheses and separated by a "~" will appear on a part. If a line is indented then it is a continuation of the previous line and the two combined represent the entire part marking for that device.

Important Information and Disclaimer: The information provided on this page represents TI's knowledge and belief as of the date that it is provided. TI bases its knowledge and belief on information provided by third parties, and makes no representation or warranty as to the accuracy of such information. Efforts are underway to better integrate information from third parties. TI has taken and continues to take reasonable steps to provide representative and accurate information but may not have conducted destructive testing or chemical analysis on incoming materials and chemicals. TI and TI suppliers consider certain information to be proprietary, and thus CAS numbers and other limited information may not be available for release.

In no event shall TI's liability arising out of such information exceed the total purchase price of the TI part(s) at issue in this document sold by TI to Customer on an annual basis.

OTHER QUALIFIED VERSIONS OF SN54HC251, SN74HC251 :

- Catalog : SN74HC251

- Military : SN54HC251

NOTE: Qualified Version Definitions:

- Catalog - TI's standard catalog product
- Military - QML certified for Military and Defense Applications

TAPE AND REEL INFORMATION

REEL DIMENSIONS

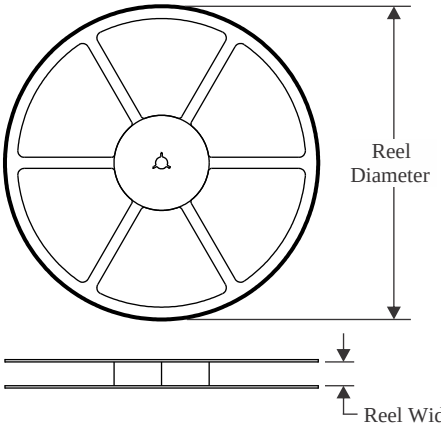

TAPE DIMENSIONS

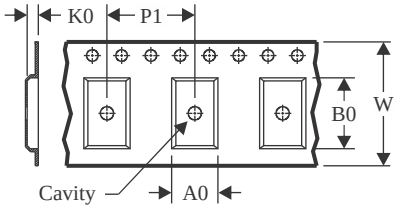

A0	Dimension designed to accommodate the component width
B0	Dimension designed to accommodate the component length
K0	Dimension designed to accommodate the component thickness
W	Overall width of the carrier tape
P1	Pitch between successive cavity centers

QUADRANT ASSIGNMENTS FOR PIN 1 ORIENTATION IN TAPE

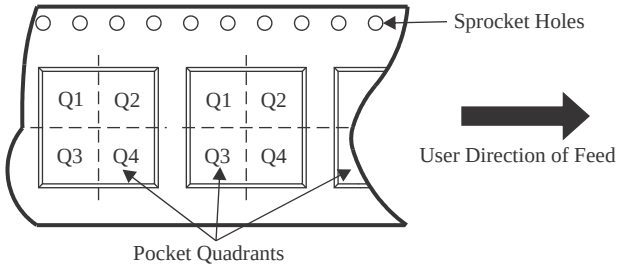

*All dimensions are nominal

Device	Package Type	Package Drawing	Pins	SPQ	Reel Diameter (mm)	Reel Width W1 (mm)	A0 (mm)	B0 (mm)	K0 (mm)	P1 (mm)	W (mm)	Pin1 Quadrant
SN74HC251DBR	SSOP	DB	16	2000	330.0	16.4	8.35	6.6	2.4	12.0	16.0	Q1
SN74HC251DR	SOIC	D	16	2500	330.0	16.4	6.5	10.3	2.1	8.0	16.0	Q1
SN74HC251DRG4	SOIC	D	16	2500	330.0	16.4	6.5	10.3	2.1	8.0	16.0	Q1
SN74HC251NSR	SOP	NS	16	2000	330.0	16.4	8.1	10.4	2.5	12.0	16.0	Q1
SN74HC251NSR	SOP	NS	16	2000	330.0	16.4	8.45	10.55	2.5	12.0	16.2	Q1
SN74HC251PWR	TSSOP	PW	16	2000	330.0	12.4	6.9	5.6	1.6	8.0	12.0	Q1
SN74HC251PWR	TSSOP	PW	16	2000	330.0	12.4	6.9	5.6	1.6	8.0	12.0	Q1
SN74HC251PWR1G4	TSSOP	PW	16	2000	330.0	12.4	6.9	5.6	1.6	8.0	12.0	Q1

TAPE AND REEL BOX DIMENSIONS

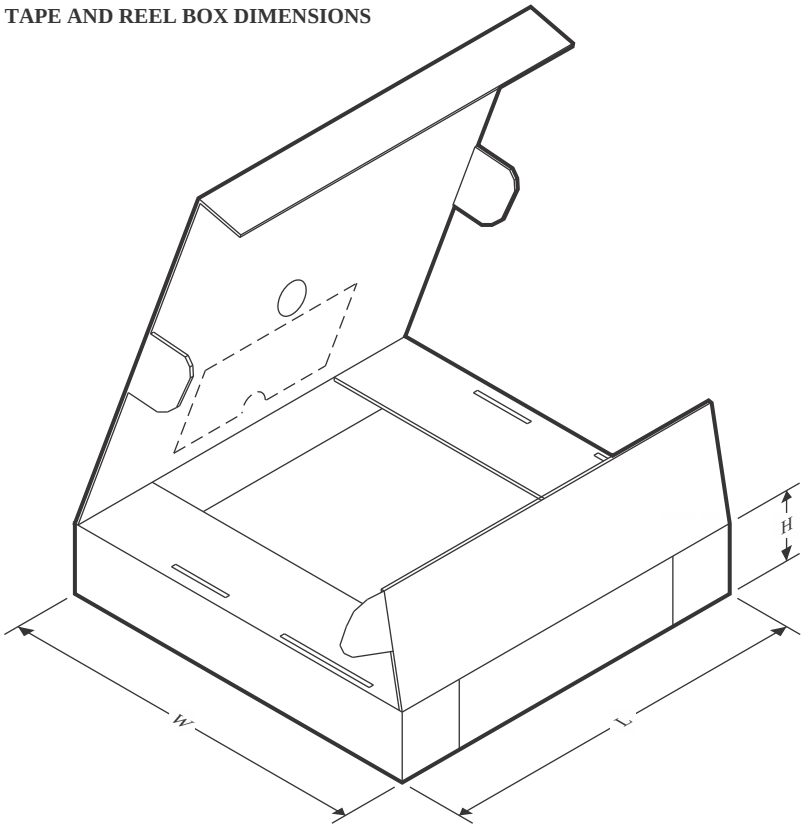

*All dimensions are nominal

Device	Package Type	Package Drawing	Pins	SPQ	Length (mm)	Width (mm)	Height (mm)
SN74HC251DBR	SSOP	DB	16	2000	353.0	353.0	32.0
SN74HC251DR	SOIC	D	16	2500	353.0	353.0	32.0
SN74HC251DRG4	SOIC	D	16	2500	353.0	353.0	32.0
SN74HC251NSR	SOP	NS	16	2000	353.0	353.0	32.0
SN74HC251NSR	SOP	NS	16	2000	353.0	353.0	32.0
SN74HC251PWR	TSSOP	PW	16	2000	353.0	353.0	32.0
SN74HC251PWR	TSSOP	PW	16	2000	356.0	356.0	35.0
SN74HC251PWR1G4	TSSOP	PW	16	2000	356.0	356.0	35.0

TUBE

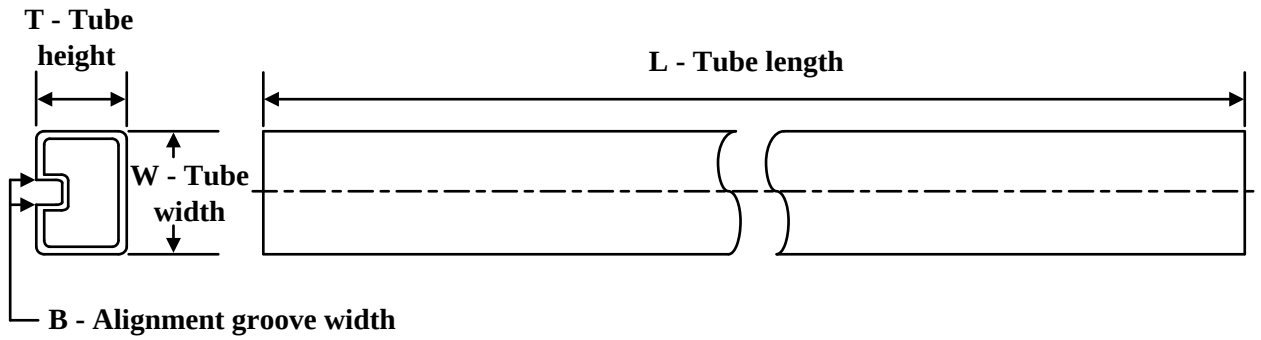

*All dimensions are nominal

Device	Package Name	Package Type	Pins	SPQ	L (mm)	W (mm)	T (µm)	B (mm)
85125012A	FK	LCCC	20	55	506.98	12.06	2030	NA
SN74HC251N	N	PDIP	16	25	506	13.97	11230	4.32
SN74HC251N	N	PDIP	16	25	506	13.97	11230	4.32
SN74HC251N.A	N	PDIP	16	25	506	13.97	11230	4.32
SN74HC251N.A	N	PDIP	16	25	506	13.97	11230	4.32
SNJ54HC251FK	FK	LCCC	20	55	506.98	12.06	2030	NA
SNJ54HC251FK.A	FK	LCCC	20	55	506.98	12.06	2030	NA

D (R–PDSO–G16) PLASTIC SMALL OUTLINE

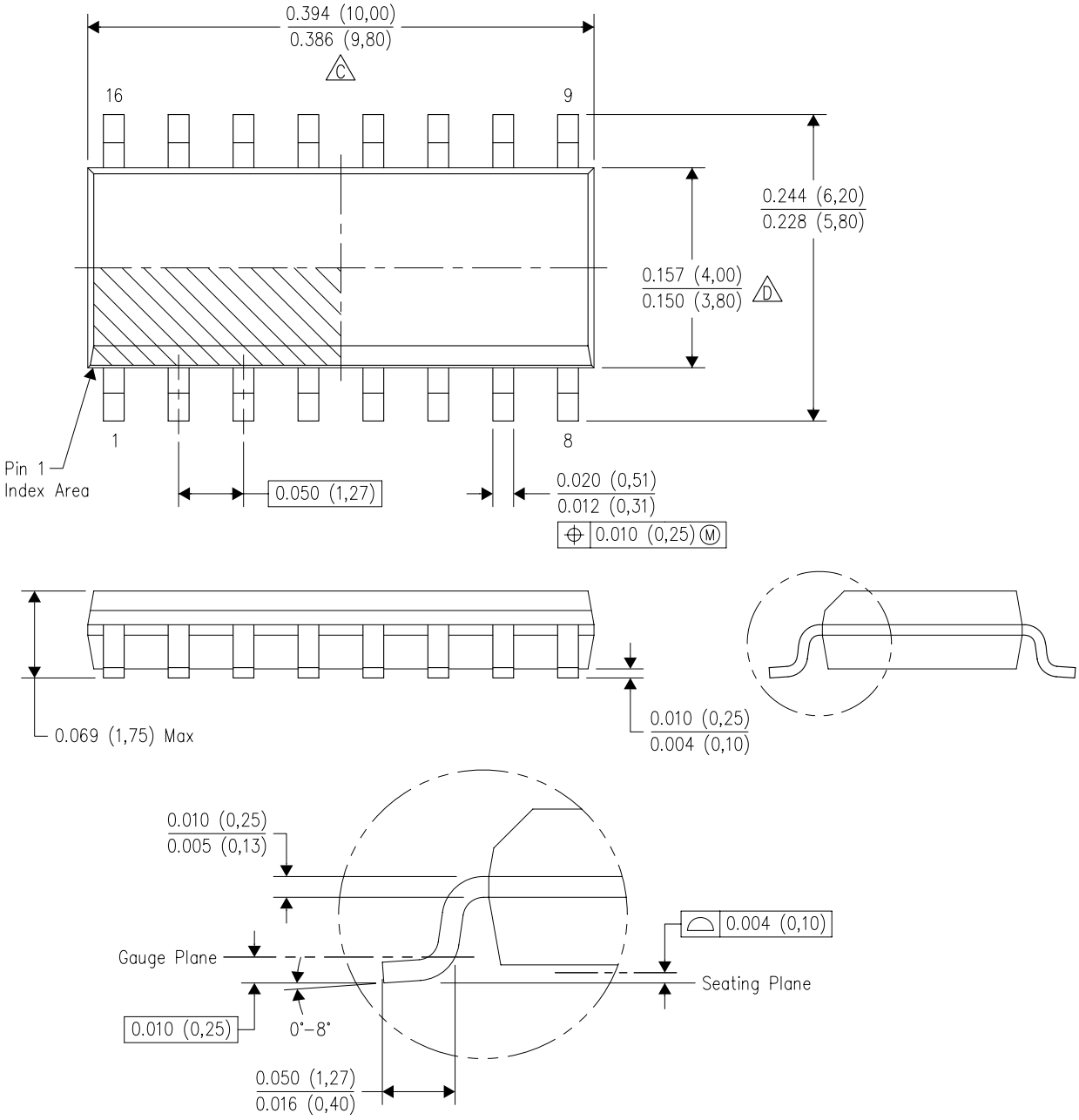

NOTES:
A. All linear dimensions are in inches (millimeters).
B. This drawing is subject to change without notice.
C. Body length does not include mold flash, protrusions, or gate burrs. Mold flash, protrusions, or gate burrs shall not exceed 0.006 (0,15) each side.
D. Body width does not include interlead flash. Interlead flash shall not exceed 0.017 (0,43) each side.
E. Reference JEDEC MS–012 variation AC.

PACKAGE OUTLINE

DB0016A

SSOP - 2 mm max height

SMALL OUTLINE PACKAGE

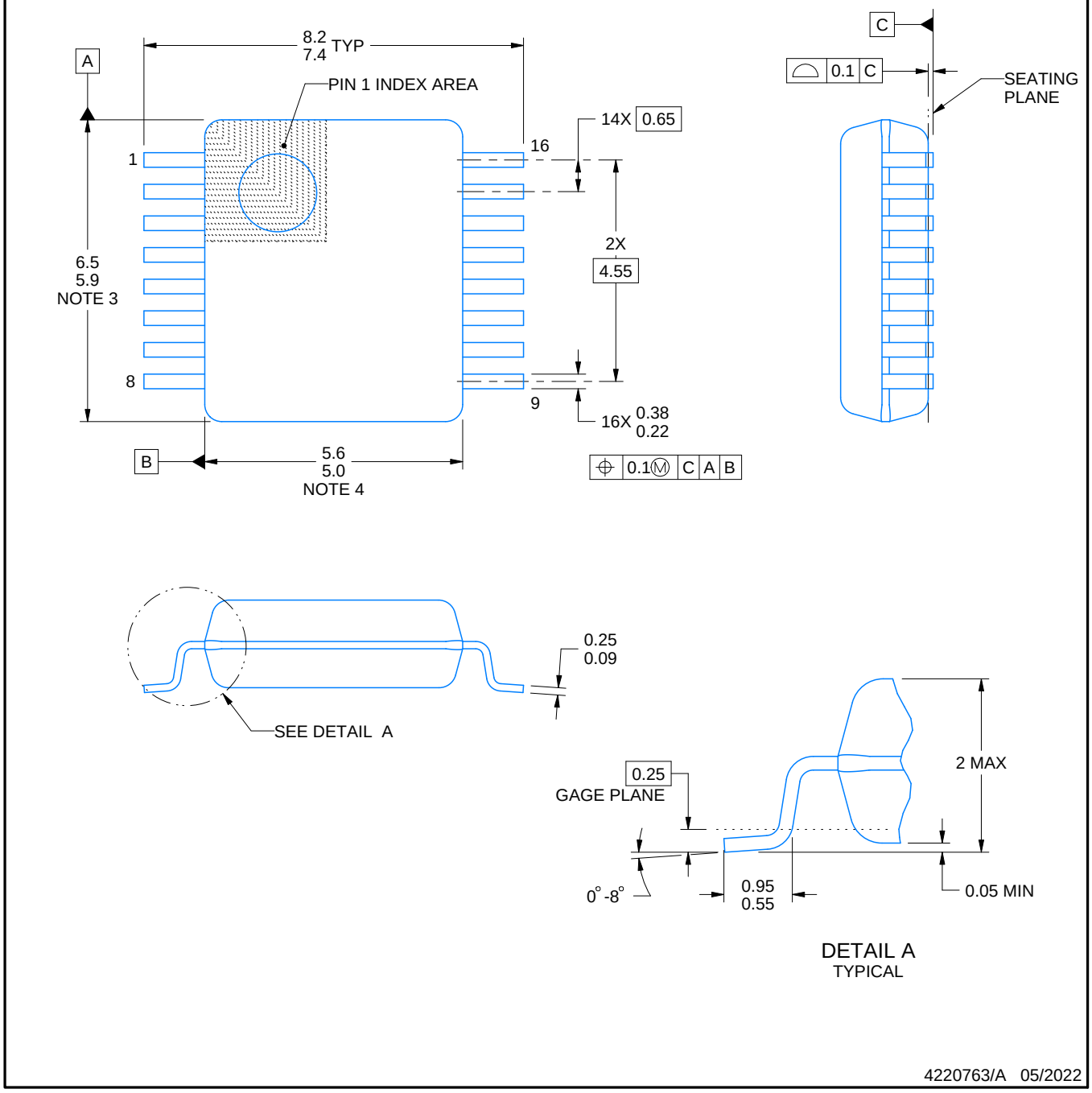

NOTES:

1. All linear dimensions are in millimeters. Any dimensions in parenthesis are for reference only. Dimensioning and tolerancing per ASME Y14.5M.
2. This drawing is subject to change without notice.
3. This dimension does not include mold flash, protrusions, or gate burrs. Mold flash, protrusions, or gate burrs shall not exceed 0.15 mm per side.
4. Reference JEDEC registration MO-150.

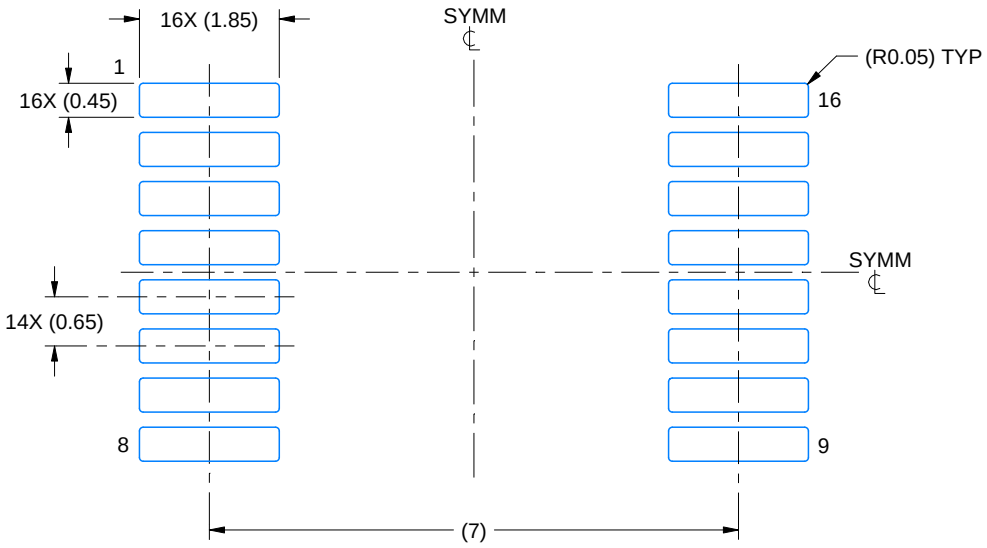

LAND PATTERN EXAMPLE
EXPOSED METAL SHOWN
SCALE: 10X

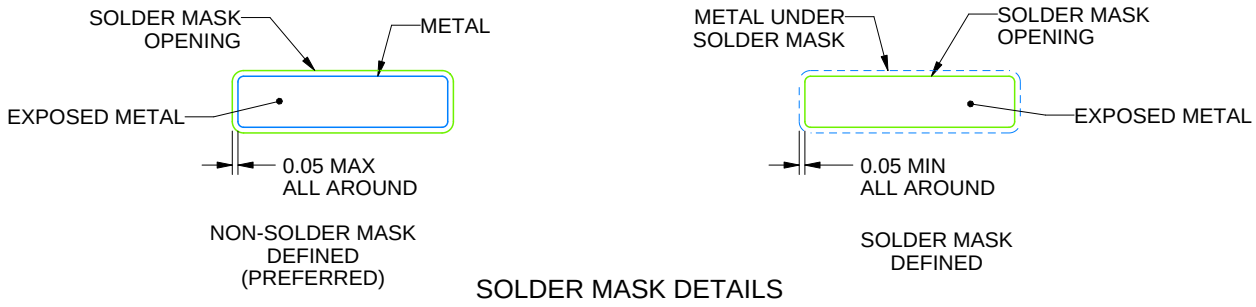

SOLDER MASK DETAILS

4220763/A 05/2022

NOTES: (continued)

5. Publication IPC-7351 may have alternate designs.
6. Solder mask tolerances between and around signal pads can vary based on board fabrication site.

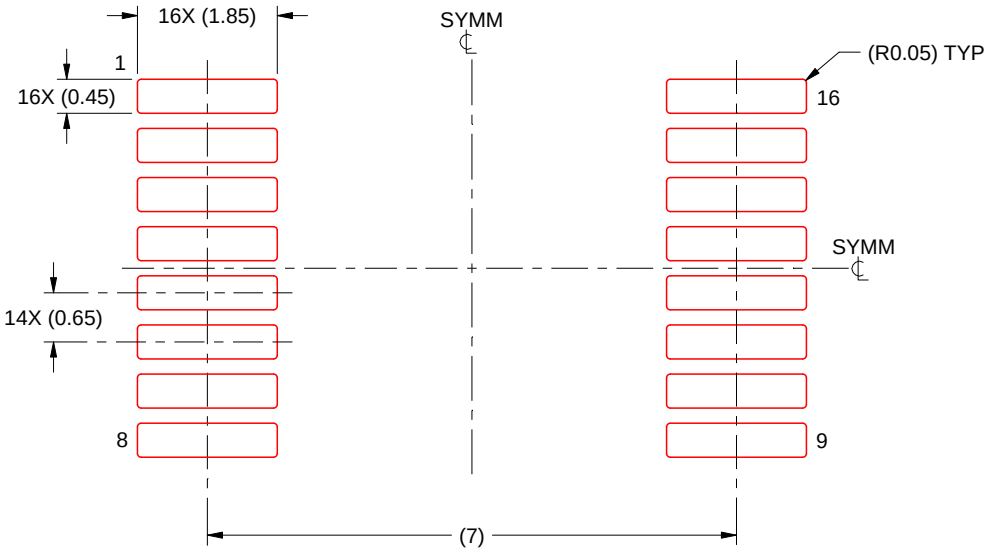

SOLDER PASTE EXAMPLE
BASED ON 0.125 mm THICK STENCIL
SCALE: 10X

4220763/A 05/2022

NOTES: (continued)

7. Laser cutting apertures with trapezoidal walls and rounded corners may offer better paste release. IPC-7525 may have alternate design recommendations.
8. Board assembly site may have different recommendations for stencil design.

GENERIC PACKAGE VIEW

FK 20

LCCC - 2.03 mm max height

8.89 x 8.89, 1.27 mm pitch

LEADLESS CERAMIC CHIP CARRIER

This image is a representation of the package family, actual package may vary.
Refer to the product data sheet for package details.

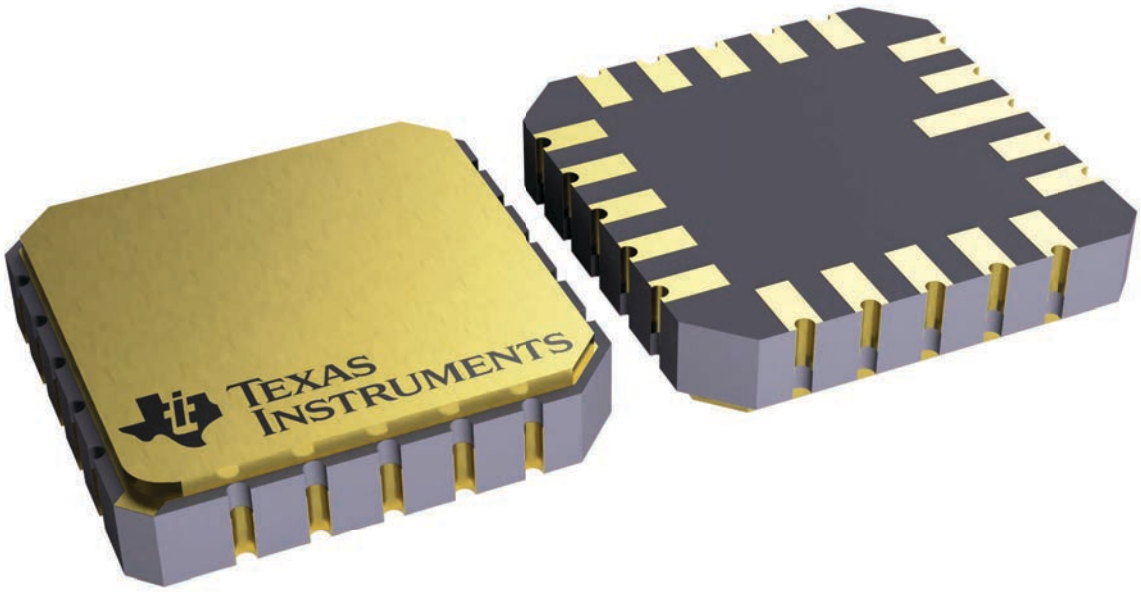

4229370VA\

J (R–GDIP–T**)

14 LEADS SHOWN

CERAMIC DUAL IN–LINE PACKAGE

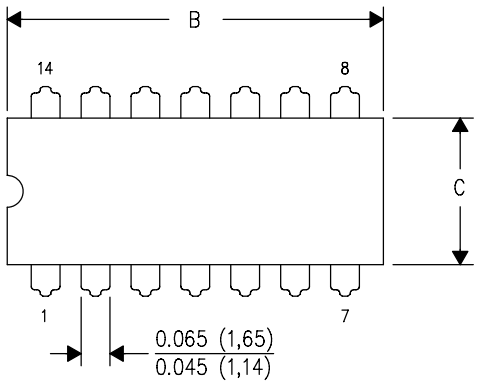

DIM \ PINS **	14	16	18	20
A	0.300 (7,62) BSC	0.300 (7,62) BSC	0.300 (7,62) BSC	0.300 (7,62) BSC
B MAX	0.785 (19,94)	.840 (21,34)	0.960 (24,38)	1.060 (26,92)
B MIN	—	—	—	—
C MAX	0.300 (7,62)	0.300 (7,62)	0.310 (7,87)	0.300 (7,62)
C MIN	0.245 (6,22)	0.245 (6,22)	0.220 (5,59)	0.245 (6,22)

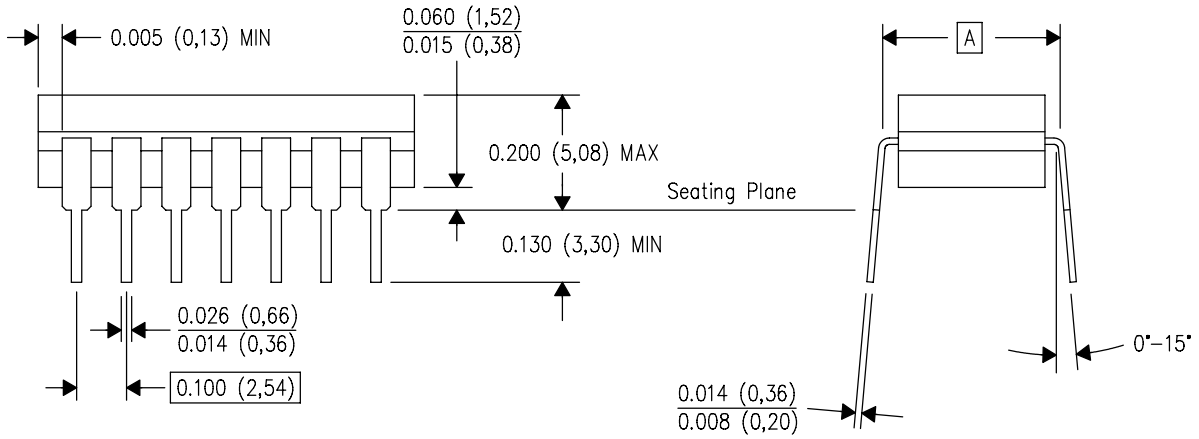

4040083/F 03/03

NOTES:
A. All linear dimensions are in inches (millimeters).
B. This drawing is subject to change without notice.
C. This package is hermetically sealed with a ceramic lid using glass frit.
D. Index point is provided on cap for terminal identification only on press ceramic glass frit seal only.
E. Falls within MIL STD 1835 GDIP1–T14, GDIP1–T16, GDIP1–T18 and GDIP1–T20.

PACKAGE OUTLINE

PW0016A

TSSOP - 1.2 mm max height

SMALL OUTLINE PACKAGE

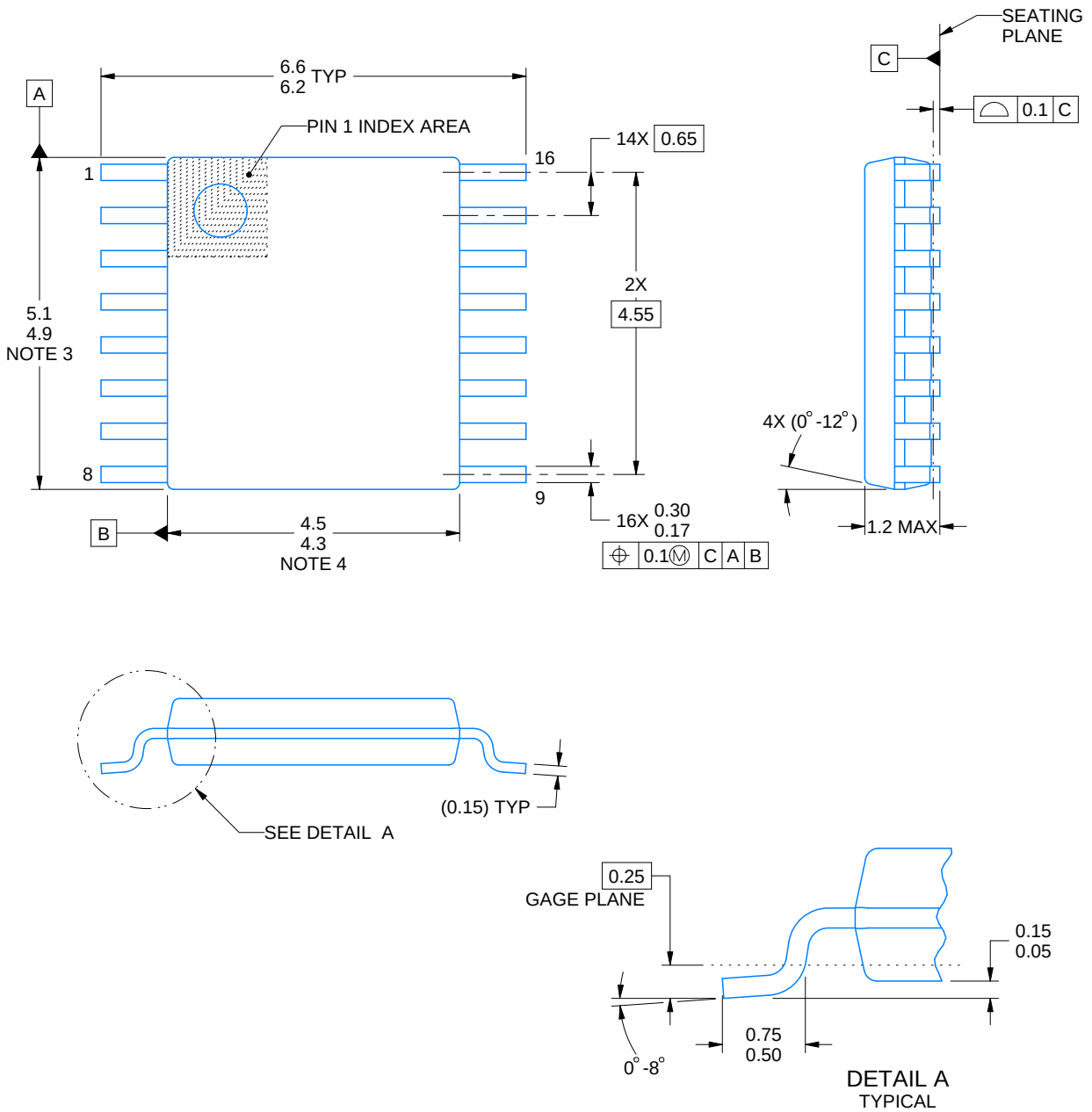

NOTES:

1. All linear dimensions are in millimeters. Any dimensions in parenthesis are for reference only. Dimensioning and tolerancing per ASME Y14.5M.
2. This drawing is subject to change without notice.
3. This dimension does not include mold flash, protrusions, or gate burrs. Mold flash, protrusions, or gate burrs shall not exceed 0.15 mm per side.
4. This dimension does not include interlead flash. Interlead flash shall not exceed 0.25 mm per side.
5. Reference JEDEC registration MO-153.

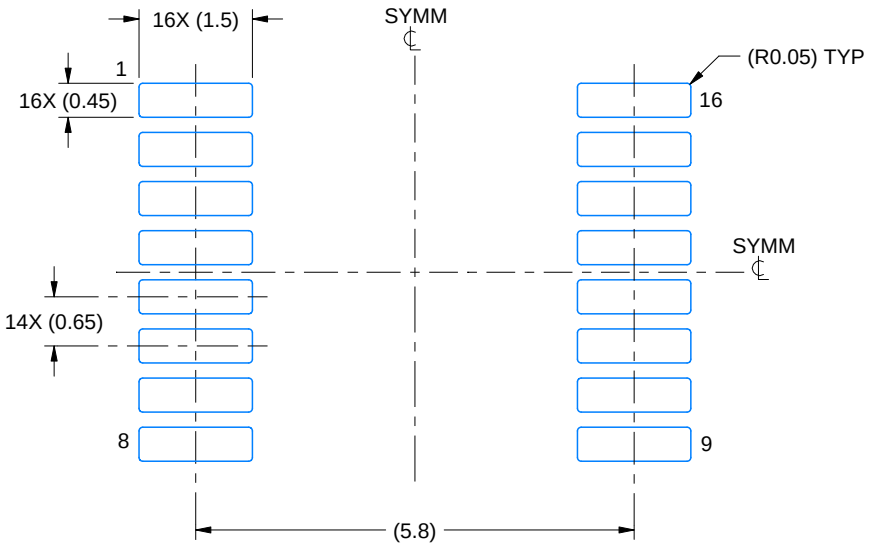

LAND PATTERN EXAMPLE
EXPOSED METAL SHOWN
SCALE: 10X



SOLDER MASK DETAILS

4220204/B 12/2023

NOTES: (continued)

6. Publication IPC-7351 may have alternate designs.
7. Solder mask tolerances between and around signal pads can vary based on board fabrication site.

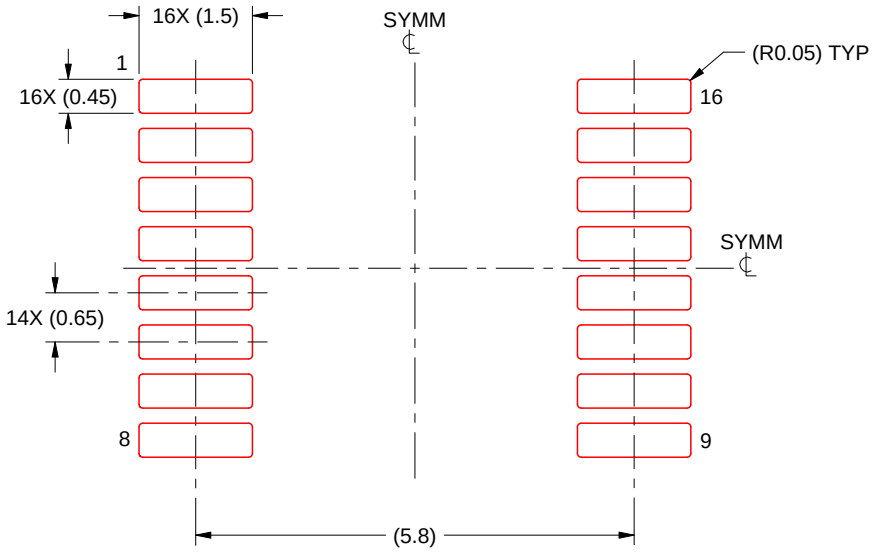

SOLDER PASTE EXAMPLE
BASED ON 0.125 mm THICK STENCIL
SCALE: 10X

4220204/B 12/2023

NOTES: (continued)

8. Laser cutting apertures with trapezoidal walls and rounded corners may offer better paste release. IPC-7525 may have alternate design recommendations.
9. Board assembly site may have different recommendations for stencil design.

N (R–PDIP–T**)

PLASTIC DUAL–IN–LINE PACKAGE

16 PINS SHOWN

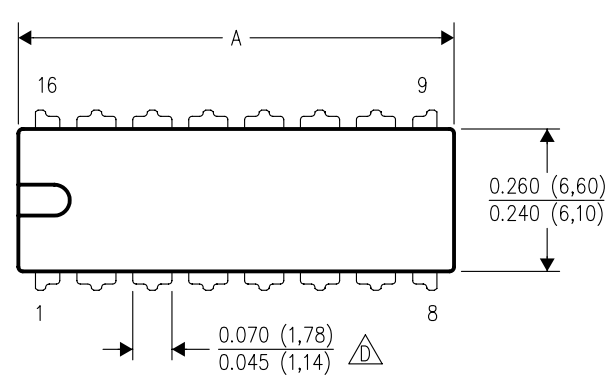

DIM \ PINS **	14	16	18	20
A MAX	0.775 (19,69)	0.775 (19,69)	0.920 (23,37)	1.060 (26,92)
A MIN	0.745 (18,92)	0.745 (18,92)	0.850 (21,59)	0.940 (23,88)
MS–001 VARIATION (C)	AA	BB	AC	AD

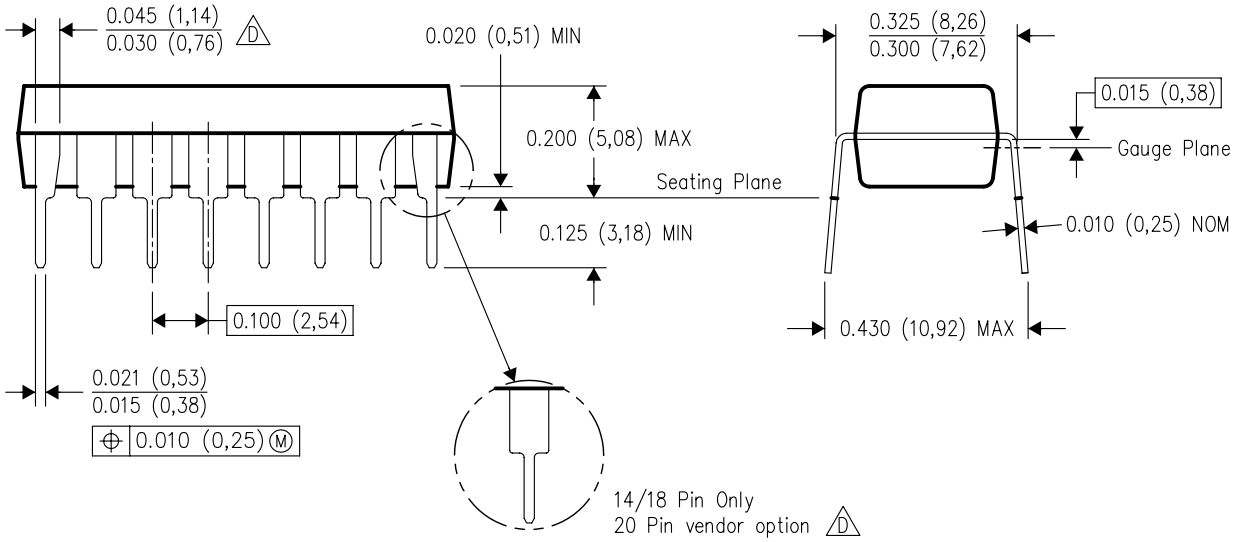

4040049/E 12/2002

NOTES:
A. All linear dimensions are in inches (millimeters).
B. This drawing is subject to change without notice.
C. Falls within JEDEC MS–001, except 18 and 20 pin minimum body length (Dim A).
D. The 20 pin end lead shoulder width is a vendor option, either half or full width.

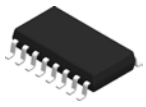

PACKAGE OUTLINE

NS0016A

SOP - 2.00 mm max height

SOP

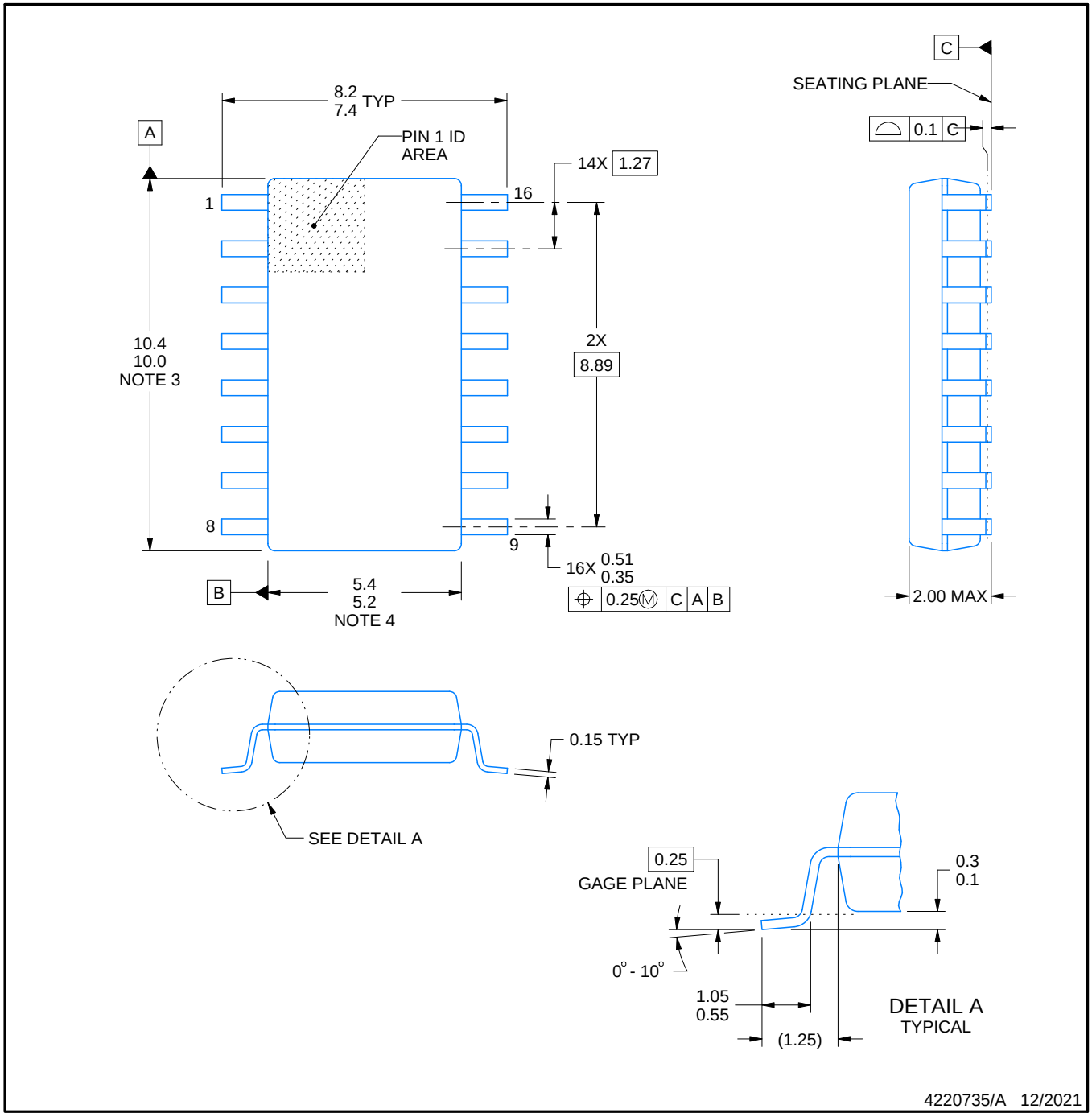

NOTES:

1. All linear dimensions are in millimeters. Dimensions in parenthesis are for reference only. Dimensioning and tolerancing per ASME Y14.5M.
2. This drawing is subject to change without notice.
3. This dimension does not include mold flash, protrusions, or gate burrs. Mold flash, protrusions, or gate burrs shall not exceed 0.15 mm, per side.
4. This dimension does not include interlead flash. Interlead flash shall not exceed 0.25 mm, per side.

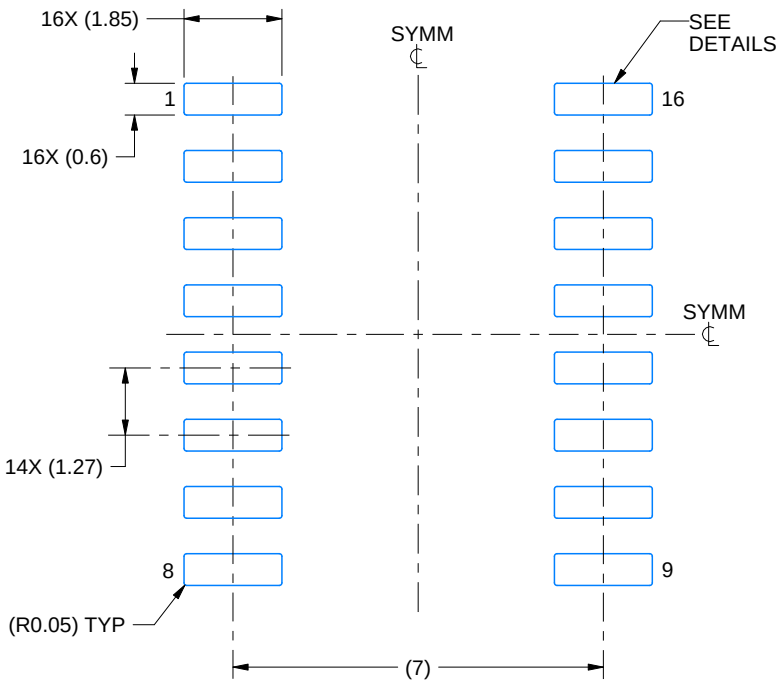

LAND PATTERN EXAMPLE
SCALE:7X

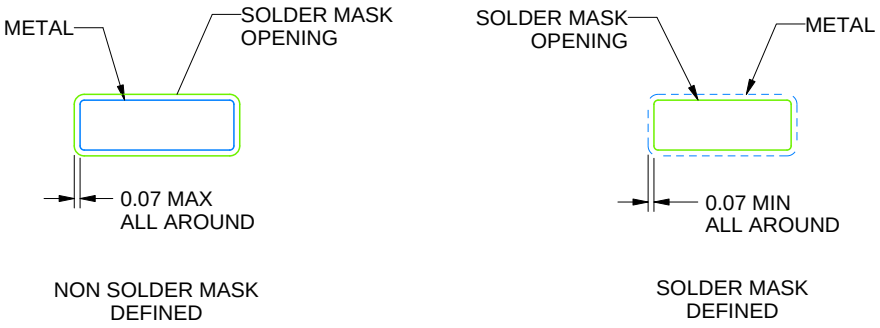

NON SOLDER MASK
DEFINED

SOLDER MASK
DEFINED

SOLDER MASK DETAILS

4220735/A 12/2021

NOTES: (continued)

5. Publication IPC-7351 may have alternate designs.
6. Solder mask tolerances between and around signal pads can vary based on board fabrication site.

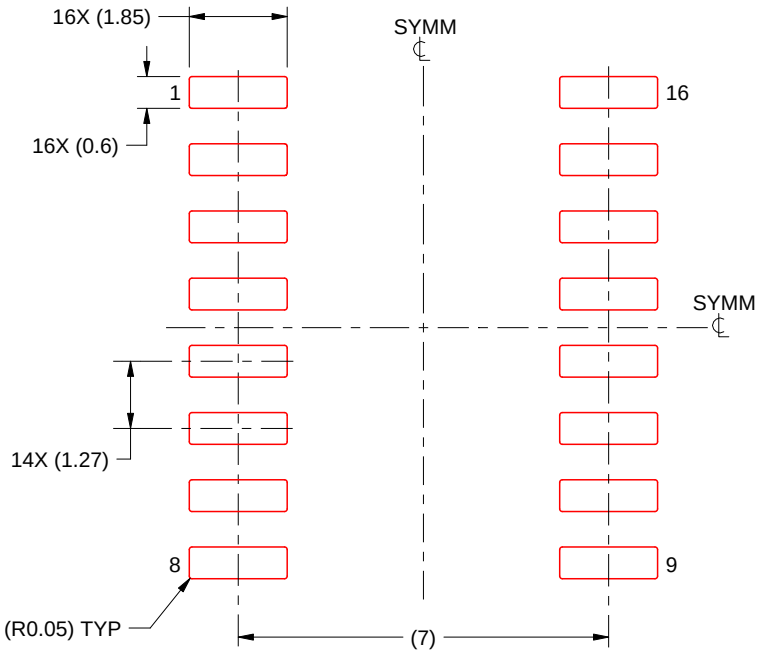

SOLDER PASTE EXAMPLE
BASED ON 0.125 mm THICK STENCIL
SCALE:7X

4220735/A 12/2021

NOTES: (continued)

7. Laser cutting apertures with trapezoidal walls and rounded corners may offer better paste release. IPC-7525 may have alternate design recommendations.
8. Board assembly site may have different recommendations for stencil design.

IMPORTANT NOTICE AND DISCLAIMER

TI PROVIDES TECHNICAL AND RELIABILITY DATA (INCLUDING DATASHEETS), DESIGN RESOURCES (INCLUDING REFERENCE DESIGNS), APPLICATION OR OTHER DESIGN ADVICE, WEB TOOLS, SAFETY INFORMATION, AND OTHER RESOURCES “AS IS” AND WITH ALL FAULTS, AND DISCLAIMS ALL WARRANTIES, EXPRESS AND IMPLIED, INCLUDING WITHOUT LIMITATION ANY IMPLIED WARRANTIES OF MERCHANTABILITY, FITNESS FOR A PARTICULAR PURPOSE OR NON-INFRINGEMENT OF THIRD PARTY INTELLECTUAL PROPERTY RIGHTS.

These resources are intended for skilled developers designing with TI products. You are solely responsible for (1) selecting the appropriate TI products for your application, (2) designing, validating and testing your application, and (3) ensuring your application meets applicable standards, and any other safety, security, regulatory or other requirements.

These resources are subject to change without notice. TI grants you permission to use these resources only for development of an application that uses the TI products described in the resource. Other reproduction and display of these resources is prohibited. No license is granted to any other TI intellectual property right or to any third party intellectual property right. TI disclaims responsibility for, and you fully indemnify TI and its representatives against any claims, damages, costs, losses, and liabilities arising out of your use of these resources.

TI’s products are provided subject to TI’s Terms of Sale, TI’s General Quality Guidelines, or other applicable terms available either on ti.com or provided in conjunction with such TI products. TI’s provision of these resources does not expand or otherwise alter TI’s applicable warranties or warranty disclaimers for TI products. Unless TI explicitly designates a product as custom or customer-specified, TI products are standard, catalog, general purpose devices.

TI objects to and rejects any additional or different terms you may propose.

Copyright © 2026, Texas Instruments Incorporated

Last updated 10/2025