# SN74HCS09-Q1 Automotive Quadruple 2-Input AND Gates with Open-Drain Outputs and Schmitt-Trigger Inputs

## 1 Features

- Wide operating voltage range: 2V to 6V
- Schmitt-trigger inputs allow for slow or noisy input signals
- Low power consumption
  - Typical $I_{CC}$ of 100nA
  - Typical input leakage current of ±100nA
- ±7.8mA output drive at 5V

## 2 Applications

- Combining power good signals
- Enable digital signals

## 3 Description

This device contains four independent 2-input AND gates with open-drain outputs and Schmitt-trigger inputs. Each gate performs the Boolean function Y = A ● B in positive logic.

**Package Information**

| PART NUMBER | PACKAGE(1) | PACKAGE SIZE(2) |
|---|---|---|
| SN74HCS09QPWRQ1 | TSSOP (14) | 5.00mm × 4.40mm |
| SN74HCS09QDRQ1 | SOIC (14) | 8.70mm × 3.90mm |

(1) For all available packages, see the orderable addendum at the end of the data sheet.
(2) The package size (length × width) is a nominal value and includes pins, where applicable.

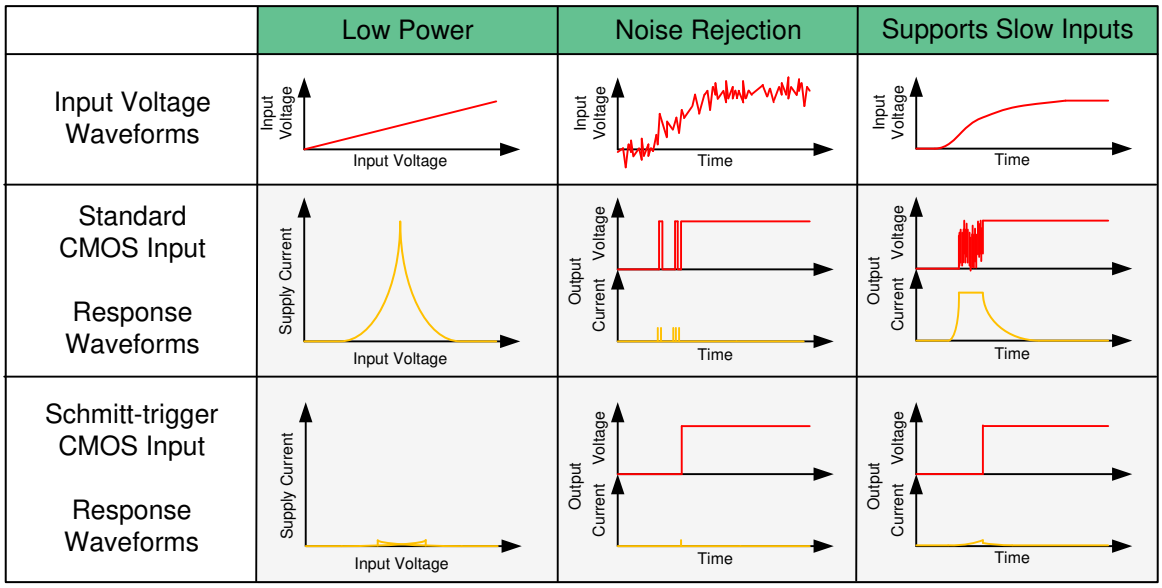


**Benefits of Schmitt-trigger Inputs**

An IMPORTANT NOTICE at the end of this data sheet addresses availability, warranty, changes, use in safety-critical applications, intellectual property matters and other important disclaimers. PRODUCTION DATA.

# Table of Contents

**1 Features**....1
**2 Applications**....1
**3 Description**....1
**4 Pin Configuration and Functions**....3
**5 Specifications**....4
5.1 Absolute Maximum Ratings....4
5.2 ESD Ratings....4
5.3 Recommended Operating Conditions....4
5.4 Thermal Information....4
5.5 Electrical Characteristics....5
5.6 Switching Characteristics....5
5.7 Operating Characteristics....5
5.8 Typical Characteristics....6
**6 Parameter Measurement Information**....7
**7 Detailed Description**....8
7.1 Overview....8
7.2 Functional Block Diagram....8
7.3 Feature Description....8
7.4 Device Functional Modes....9
**8 Application and Implementation**....10
8.1 Application Information....10
8.2 Typical Application....10
8.3 Power Supply Recommendations....12
8.4 Layout....12
**9 Device and Documentation Support**....14
9.1 Documentation Support....14
9.2 Related Links....14
9.3 Support Resources....14
9.4 Trademarks....14
9.5 Electrostatic Discharge Caution....14
9.6 Glossary....14
**10 Revision History**....14
**11 Mechanical, Packaging, and Orderable Information**....15


Copyright © 2026 Texas Instruments Incorporated

# 4 Pin Configuration and Functions

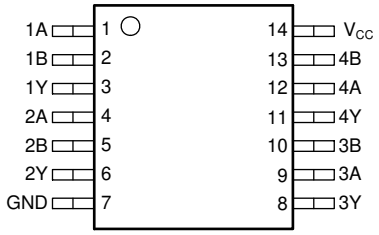


**Figure 4-1. PW or D Package14-Pin TSSOP or SOICTop View**

**Table 4-1. Pin Functions**

| PIN | | TYPE[(1)] | DESCRIPTION |
|---|---|---|---|
| NAME | NO. | | |
| 1A | 1 | I | Channel 1, Input A |
| 1B | 2 | I | Channel 1, Input B |
| 1Y | 3 | O | Channel 1, Output Y |
| 2A | 4 | I | Channel 2, Input A |
| 2B | 5 | I | Channel 2, Input B |
| 2Y | 6 | O | Channel 2, Output Y |
| 3A | 9 | I | Channel 3, Input A |
| 3B | 10 | I | Channel 3, Input B |
| 3Y | 8 | O | Channel 3, Output Y |
| 4A | 12 | I | Channel 4, Input A |
| 4B | 13 | I | Channel 4, Input B |
| 4Y | 11 | O | Channel 4, Output Y |
| GND | 7 | — | Ground |
| $V_{CC}$ | 14 | — | Positive Supply |

(1) I = input, O = output, P = power, FB = feedback, GND = ground, N/A = not applicable

# 5 Specifications

## 5.1 Absolute Maximum Ratings

over operating free-air temperature range (unless otherwise noted)[1]

| | | | MIN | MAX | UNIT |
|---|---|---|---|---|---|
| $V_{CC}$ | Supply voltage | | –0.5 | 7 | V |
| $I_{IK}$ | Input clamp current[2] | $V_I$ < –0.5V or $V_I$ > $V_{CC}$ + 0.5V | | ±20 | mA |
| $I_{OK}$ | Output clamp current[2] | $V_I$ < –0.5V or $V_I$ > $V_{CC}$ + 0.5V | | ±20 | mA |
| $I_O$ | Continuous output current | $V_O$ = 0 to $V_{CC}$ | | ±35 | mA |
| $I_{CC}$ | Continuous current through $V_{CC}$ or GND | | | ±70 | mA |
| $T_J$ | Junction temperature[3] | | | 150 | °C |
| $T_{stg}$ | Storage temperature | | –65 | 150 | °C |

(1) Operation outside the *Absolute Maximum Ratings* may cause permanent device damage. *Absolute Maximum Ratings* do not imply functional operation of the device at these or any other conditions beyond those listed under *Recommended Operating Conditions*. If used outside the *Recommended Operating Conditions* but within the *Absolute Maximum Ratings*, the device may not be fully functional, and this may affect device reliability, functionality, performance, and shorten the device lifetime.
(2) The input and output voltage ratings can be exceeded if the input and output current ratings are observed.
(3) Verified by design.

## 5.2 ESD Ratings

| | | | VALUE | UNIT |
|---|---|---|---|---|
| $V_{(ESD)}$ | Electrostatic discharge | Human body model (HBM), per AEC Q100-002[1] HBM ESD Classification Level 2 | ±4000 | V |
| | | Charged device model (CDM), per AEC Q100-011 CDM ESD Classification Level C6 | ±1500 | |

(1) AEC Q100-002 indicate that HBM stressing shall be in accordance with the ANSI/ESDA/JEDEC JS-001 specification.

## 5.3 Recommended Operating Conditions

over operating free-air temperature range (unless otherwise noted)

| | | MIN | NOM | MAX | UNIT |
|---|---|---|---|---|---|
| $V_{CC}$ | Supply voltage | 2 | 5 | 6 | V |
| $V_I$ | Input voltage | 0 | | $V_{CC}$ | V |
| $V_O$ | Output voltage | 0 | | $V_{CC}$ | V |
| $T_A$ | Ambient temperature | –40 | | 125 | °C |

## 5.4 Thermal Information

| THERMAL METRIC[1] | | SN74HCS09-Q1 | | UNIT |
|---|---|---|---|---|
| | | PW (TSSOP) | D (SOIC) | |
| | | 14 PINS | 14 PINS | |
| $R_{\theta JA}$ | Junction-to-ambient thermal resistance | 151.7 | 133.6 | °C/W |
| $R_{\theta JC(top)}$ | Junction-to-case (top) thermal resistance | 79.4 | 89 | °C/W |
| $R_{\theta JB}$ | Junction-to-board thermal resistance | 94.7 | 89.5 | °C/W |
| $\Psi_{JT}$ | Junction-to-top characterization parameter | 25.2 | 45.5 | °C/W |
| $\Psi_{JB}$ | Junction-to-board characterization parameter | 94.1 | 89.1 | °C/W |


Copyright © 2026 Texas Instruments Incorporated

## 5.4 Thermal Information (continued)

| THERMAL METRIC[1] | | SN74HCS09-Q1 | | UNIT |
|---|---|---|---|---|
| | | PW (TSSOP) | D (SOIC) | |
| | | 14 PINS | 14 PINS | |
| $R_{\theta JC(bot)}$ | Junction-to-case (bottom) thermal resistance | N/A | N/A | °C/W |

(1) For more information about traditional and new thermal metrics, see the *Semiconductor and IC Package Thermal Metrics* application note.

## 5.5 Electrical Characteristics

over operating free-air temperature range; typical ratings measured at $T_A$ = 25°C (unless otherwise noted)

| PARAMETER | | TEST CONDITIONS | | $V_{CC}$ | MIN | TYP | MAX | UNIT |
|---|---|---|---|---|---|---|---|---|
| $V_{T+}$ | Positive switching threshold | | | 2V | 1.13 | 1.26 | 1.37 | V |
| | | | | 4.5V | 2.31 | 2.47 | 2.66 | |
| | | | | 6V | 2.99 | 3.18 | 3.44 | |
| $V_{T-}$ | Negative switching threshold | | | 2V | 0.55 | 0.62 | 0.71 | V |
| | | | | 4.5V | 1.21 | 1.36 | 1.5 | |
| | | | | 6V | 1.56 | 1.79 | 1.99 | |
| $\Delta V_T$ | $V_{T+}$ - $V_{T-}$ | | | 2V | 0.54 | 0.64 | 0.71 | V |
| | | | | 4.5V | 0.94 | 1.11 | 1.27 | |
| | | | | 6V | 1.20 | 1.38 | 1.57 | |
| $V_{OL}$ | Low-level output voltage | $V_I$ = $V_{IH}$ or $V_{IL}$ | $I_{OL}$ = 20µA | 2V to 6V | | 0.002 | 0.1 | V |
| | | | $I_{OL}$ = 4mA | 4.5V | | 0.18 | 0.30 | |
| | | | $I_{OL}$ = 7.8mA | 6V | | 0.22 | 0.33 | |
| $I_I$ | Input leakage current | $V_I$ = $V_{CC}$ or 0 | | 6V | | ±100 | ±1000 | nA |
| $I_{OZ}$ | Output leakage current (3-state only) | $V_O$ = $V_{CC}$ or 0 | | 6V | | 0.01 | 2 | µA |
| $I_{CC}$ | Supply current | $V_I$ = $V_{CC}$ or 0, $I_O$ = 0 | | 6V | | 0.1 | 2 | µA |
| $C_i$ | Input capacitance | | | 2V to 6V | | | 5 | pF |

## 5.6 Switching Characteristics

$C_L$ = 50pF; over operating free-air temperature range (unless otherwise noted). See Parameter Measurement Information.

| PARAMETER | | FROM (INPUT) | TO (OUTPUT) | $V_{CC}$ | MIN | TYP[1] | MAX | UNIT |
|---|---|---|---|---|---|---|---|---|
| $t_{pd}$ | Propagation delay | A or B | Y | 2V | | 15 | 23 | ns |
| | | | | 4.5V | | 10 | 12 | |
| | | | | 6V | | 9 | 11 | |
| $t_t$ | Transition-time | | Y | 2V | | 9 | 16 | ns |
| | | | | 4.5V | | 5 | 9 | |
| | | | | 6V | | 4 | 8 | |

(1) $T_A$ = 25°C

## 5.7 Operating Characteristics

over operating free-air temperature range (unless otherwise noted)

| PARAMETER | | TEST CONDITIONS | MIN | TYP | MAX | UNIT |
|---|---|---|---|---|---|---|
| $C_{pd}$ | Power dissipation capacitance per gate | No load | | 10 | | pF |

## 5.8 Typical Characteristics

$T_A$ = 25°C

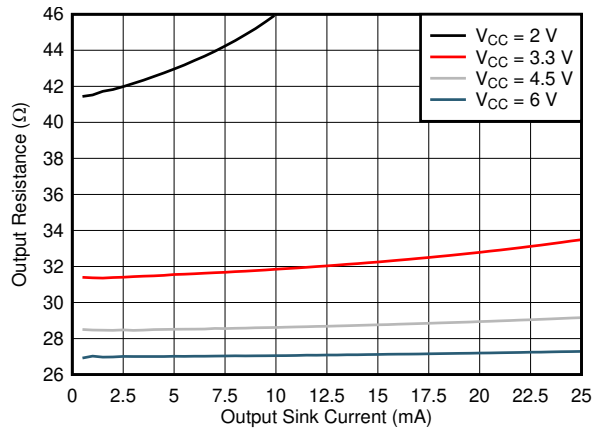


**Figure 5-1. Output driver resistance in Low state**

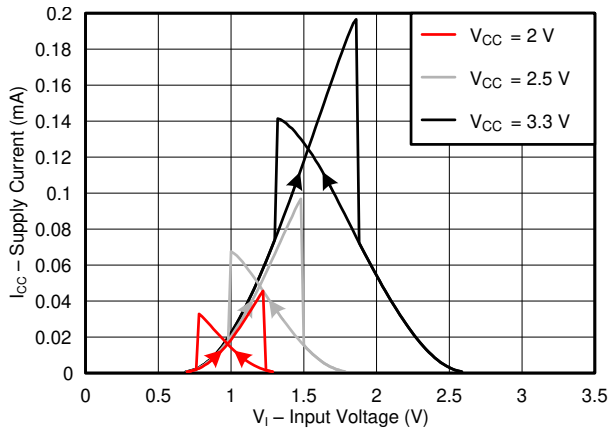


**Figure 5-2. Typical supply current versus input voltage across common supply values (2 V to 3.3V)**

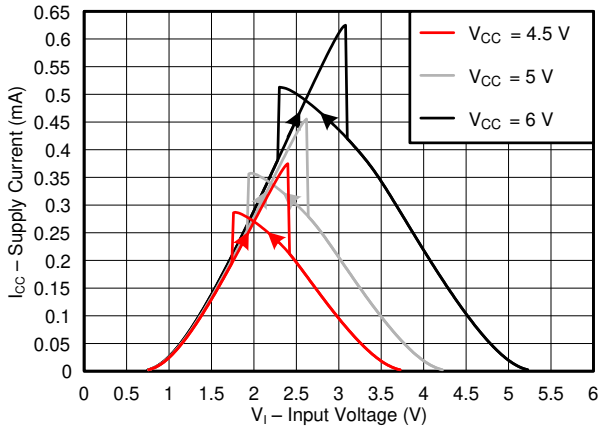


**Figure 5-3. Typical supply current versus input voltage across common supply values (4.5V to 6V)**


Copyright © 2026 Texas Instruments Incorporated

## 6 Parameter Measurement Information

- Phase relationships between waveforms are chosen arbitrarily. All input pulses are supplied by generators having the following characteristics: PRR ≤ 1MHz, $Z_O$ = 50Ω, $t_t$ < 2.5ns.
- The outputs are measured one at a time, with one input transition per measurement.

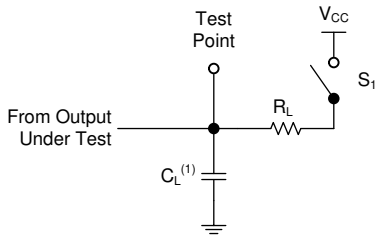


A. $C_L$= 50pF and includes probe and jig capacitance.

**Figure 6-1. Load Circuit**

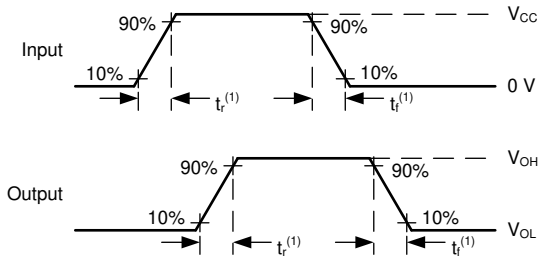


**Figure 6-2. Voltage Waveforms Transition Times**

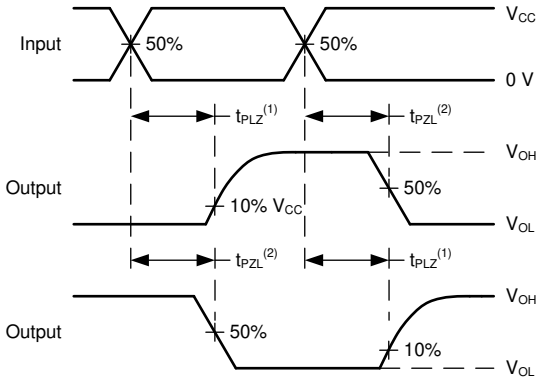


A. The maximum between $t_{PLH}$ and $t_{PHL}$ is used for $t_{pd}$.

**Figure 6-3. Voltage Waveforms Propagation Delays**

# 7 Detailed Description

## 7.1 Overview

This device contains four independent 2-input AND gates with open-drain outputs and Schmitt-trigger inputs. Each gate performs the Boolean function Y = A ● B in positive logic.

## 7.2 Functional Block Diagram

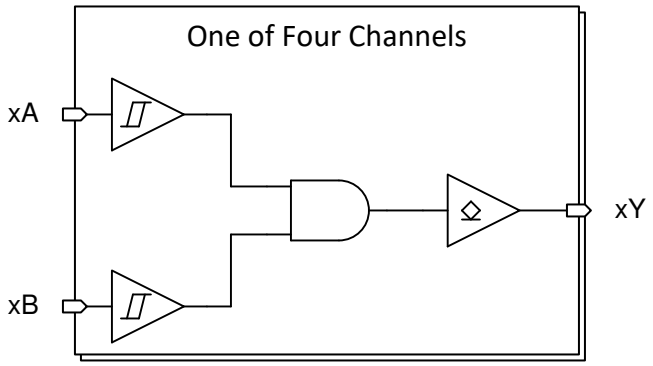


## 7.3 Feature Description

### *7.3.1 Open-Drain CMOS Outputs*

Open-drain outputs are included in SN74HCS09-Q1. Open-drain outputs can only drive the output low. When in the high logical state, outputs are in a high-impedance state, meaning outputs neither source nor sink current (with the exception of minor leakage current as defined in the *Electrical Characteristics* table). In the high-impedance state, the output voltage is not controlled by SN74HCS09-Q1 and is dependent on external factors.

Because of the high-impedance state, an external pull-up resistor is required to define a logic high. Without a pull-up resistor, the output floats and has an undefined logic level. The resistor value depends on factors like parasitic capacitance and power consumption; typically, a 10kΩ resistor is suitable.

The drive capability of SN74HCS09-Q1 can create fast edges into light loads, so consider routing and load conditions to prevent ringing. Additionally, outputs can drive higher currents than SN74HCS09-Q1 is designed to handle continuously. Limit the device output power to avoid damage due to overcurrent. Follow the electrical and thermal limits defined in the *Absolute Maximum Ratings* at all times. See the *Recommended Operating Conditions* table for the maximum output voltage that can be externally connected to SN74HCS09-Q1.

Leave unused open-drain CMOS outputs disconnected.

### *7.3.2 CMOS Schmitt-Trigger Inputs*

Standard CMOS inputs are high impedance and are typically modeled as a resistor from the input to ground in parallel with the input capacitance given in the *Electrical Characteristics*. The worst case resistance is calculated with the maximum input voltage, given in the *Absolute Maximum Ratings*, and the maximum input leakage current, given in the *Electrical Characteristics*, using Ohm's law (R = V ÷ I).

The Schmitt-trigger input architecture provides hysteresis as defined by $\Delta V_T$ in the *Electrical Characteristics*, which makes this device extremely tolerant to slow or noisy inputs. While the inputs can be driven much slower than standard CMOS inputs, it is still recommended to properly terminate unused inputs. Driving the inputs slowly will also increase dynamic current consumption of the device. For additional information regarding Schmitt-trigger inputs, please see Understanding Schmitt Triggers.


Copyright © 2026 Texas Instruments Incorporated

### *7.3.3 Clamp Diode Structure*

The inputs and outputs to this device have both positive and negative clamping diodes as depicted in Figure 7-1.

**CAUTION**

Voltages beyond the values specified in the Absolute Maximum Ratings table can cause damage to the device. The recommended input and output voltage ratings may be exceeded if the input and output clamp-current ratings are observed.

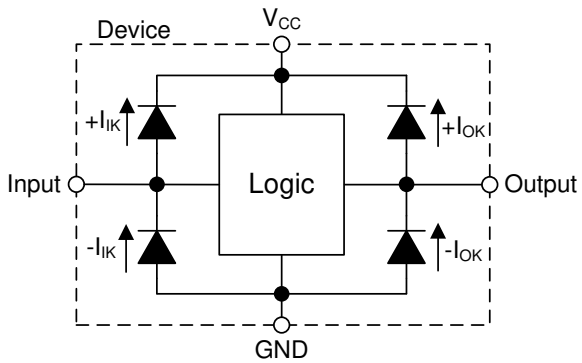


**Figure 7-1. Electrical Placement of Clamping Diodes for Each Input and Output**

## 7.4 Device Functional Modes

Table 7-1 lists the functional modes of the SN74HCS09-Q1.

**Table 7-1. Function Table**

| INPUTS | | OUTPUT |
|---|---|---|
| **A** | **B** | **Y** |
| H | H | Z |
| L | X | L |
| X | L | L |

# 8 Application and Implementation

**Note**

Information in the following applications sections is not part of the TI component specification, and TI does not warrant its accuracy or completeness. TI's customers are responsible for determining suitability of components for their purposes, as well as validating and testing their design implementation to confirm system functionality.

## 8.1 Application Information

In this application, two 2-input AND gates with open-drain outputs are combined to produce a 4-input AND gate function as shown in *Figure 8-1*. The remaining two gates can be used for another application in the system, or the inputs can be grounded and the channels left unused.

The SN74HCS09-Q1 is used to directly control the $\overline{\text{RESET}}$ pin of a motor controller. The controller requires four input signals to all be HIGH before being enabled, and must be disabled in the event that any one signal goes LOW. The 4-input AND gate function combines the four individual reset signals into a single active-low reset signal.

## 8.2 Typical Application

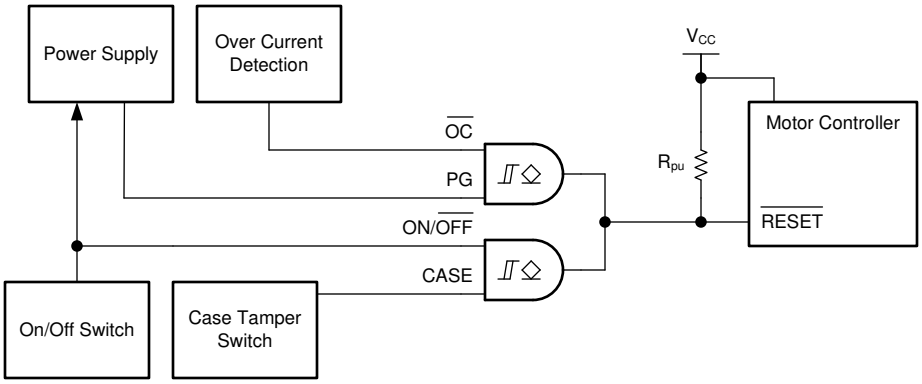


**Figure 8-1. Typical application block diagram**

### *8.2.1 Design Requirements*

- All signals in the system operate at the same voltage within the recommended operating range of the device
- The motor controller must be disabled if any of these conditions apply:
  - Power Supply is not ready (PG)
  - Excessive current is detected ($\overline{\text{OC}}$)
  - Excessive temperature is detected ($\overline{\text{OT}}$)
  - The power switch is in the OFF position (ON/ $\overline{\text{OFF}}$)


Copyright © 2026 Texas Instruments Incorporated

#### 8.2.1.1 Power Considerations

Ensure the desired supply voltage is within the range specified in the *Recommended Operating Conditions*. The supply voltage sets the device's electrical characteristics as described in the *Electrical Characteristics*.

The ground must be capable of sinking current equal to the total current to be sunk by all outputs of the SN74HCS09-Q1 plus the maximum supply current, $I_{CC}$, listed in *Electrical Characteristics*. The logic device can only sink as much current as is provided by the external pull-up resistor or other supply source. Be sure not to exceed the maximum total current through GND listed in the *Absolute Maximum Ratings*.

Total power consumption can be calculated using the information provided in CMOS Power Consumption and $C_{pd}$ Calculation.

Thermal increase can be calculated using the information provided in Thermal Characteristics of Standard Linear and Logic (SLL) Packages and Devices.

**CAUTION**

The maximum junction temperature, $T_J$(max) listed in the *Absolute Maximum Ratings*, is an *additional limitation* to prevent damage to the device. Do not violate any values listed in the *Absolute Maximum Ratings*. These limits are provided to prevent damage to the device.

#### 8.2.1.2 Input Considerations

Input signals must cross $V_{t-}$(min) to be considered a logic LOW, and $V_{t+}$(max) to be considered a logic HIGH. Do not exceed the maximum input voltage range found in the *Absolute Maximum Ratings*.

Unused inputs must be terminated to either $V_{CC}$ or ground. These can be directly terminated if the input is completely unused, or they can be connected with a pull-up or pull-down resistor if the input is to be used sometimes, but not always. A pull-up resistor is used for a default state of HIGH, and a pull-down resistor is used for a default state of LOW. The resistor size is limited by drive current of the controller, leakage current into the SN74HCS09-Q1, as specified in the *Electrical Characteristics*, and the desired input transition rate. A 10kΩ resistor value is often used due to these factors.

The SN74HCS09-Q1 has no input signal transition rate requirements because it has Schmitt-trigger inputs.

Another benefit to having Schmitt-trigger inputs is the ability to reject noise. Noise with a large enough amplitude can still cause issues. To know how much noise is too much, please refer to the $\Delta V_T$(min) in the *Electrical Characteristics*. This hysteresis value will provide the peak-to-peak limit.

Unlike what happens with standard CMOS inputs, Schmitt-trigger inputs can be held at any valid value without causing huge increases in power consumption. The typical additional current caused by holding an input at a value other than $V_{CC}$ or ground is plotted in the *Typical Characteristics*.

Refer to the *Feature Description* for additional information regarding the inputs for this device.

#### 8.2.1.3 Output Considerations

The ground voltage is used to produce the output LOW voltage. Sinking current into the output increases the output voltage as specified by the $V_{OL}$ specification in the *Electrical Characteristics*.

Open-drain outputs can be directly connected together to produce a wired-AND. This is possible because the outputs cannot source current, and thus can never be in bus-contention.

Unused outputs can be left floating. Do not connect outputs directly to $V_{CC}$ or ground.

Refer to *Feature Description* for additional information regarding the outputs for this device.

### 8.2.2 Detailed Design Procedure

1. Add a decoupling capacitor from $V_{CC}$ to GND. The capacitor needs to be placed physically close to the device and electrically close to both the $V_{CC}$ and GND pins. An example layout is shown in the *Layout*.
2. Ensure the capacitive load at the output is ≤ 70pF. This is not a hard limit, however it will ensure optimal performance. This can be accomplished by providing short, appropriately sized traces from the SN74HCS09-Q1 to the receiving device.
3. Ensure the resistive load at the output is larger than ($V_{CC}$ / $I_O$(max)) Ω. This will ensure that the maximum output current from the *Absolute Maximum Ratings* is not violated. Most CMOS inputs have a resistive load measured in megaohms; much larger than the minimum calculated above.
4. Thermal issues are rarely a concern for logic gates, however the power consumption and thermal increase can be calculated using the steps provided in the application note, CMOS Power Consumption and Cpd Calculation

### 8.2.3 Application Curves

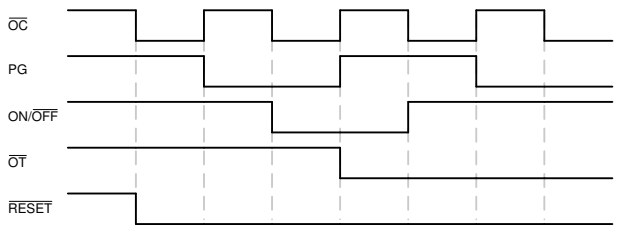


**Figure 8-2. Application timing diagram**

## 8.3 Power Supply Recommendations

The power supply can be any voltage between the minimum and maximum supply voltage rating located in the *Recommended Operating Conditions*. Each $V_{CC}$ terminal must have a bypass capacitor to prevent power disturbance. A 0.1µF capacitor is recommended for this device. It is acceptable to parallel multiple bypass caps to reject different frequencies of noise. The 0.1µF and 1µF capacitors are commonly used in parallel. The bypass capacitor must be installed as close to the power terminal as possible for best results, as shown in *Figure 8-3*.

## 8.4 Layout

### 8.4.1 Layout Guidelines

When using multiple-input and multiple-channel logic devices inputs must not ever be left floating. In many cases, functions or parts of functions of digital logic devices are unused; for example, when only two inputs of a triple-input AND gate are used. Such unused input pins must not be left unconnected because the undefined voltages at the outside connections result in undefined operational states. All unused inputs of digital logic devices must be connected to a logic high or logic low voltage, as defined by the input voltage specifications, to prevent them from floating. The logic level that must be applied to any particular unused input depends on the function of the device. Generally, the inputs are tied to GND or $V_{CC}$, whichever makes more sense for the logic function or is more convenient.


Copyright © 2026 Texas Instruments Incorporated

### 8.4.2 Layout Example

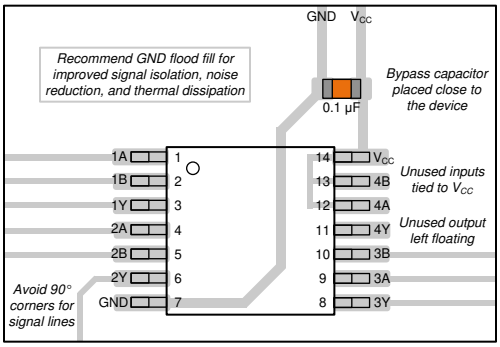


**Figure 8-3. Example layout for the SN74HCS09-Q1**

# 9 Device and Documentation Support

## 9.1 Documentation Support

### *9.1.1 Related Documentation*

For related documentation see the following:

- Reduce Noise and Save Power with the New HCS Logic Family
- CMOS Power Consumption and CPD Calculation
- Designing with Logic

## 9.2 Related Links

The table below lists quick access links. Categories include technical documents, support and community resources, tools and software, and quick access to sample or buy.

## 9.3 Support Resources

TI E2E™ support forums are an engineer's go-to source for fast, verified answers and design help — straight from the experts. Search existing answers or ask your own question to get the quick design help you need.

Linked content is provided "AS IS" by the respective contributors. They do not constitute TI specifications and do not necessarily reflect TI's views; see TI's Terms of Use.

## 9.4 Trademarks

TI E2E™ is a trademark of Texas Instruments.
All trademarks are the property of their respective owners.

## 9.5 Electrostatic Discharge Caution

This integrated circuit can be damaged by ESD. Texas Instruments recommends that all integrated circuits be handled with appropriate precautions. Failure to observe proper handling and installation procedures can cause damage.

ESD damage can range from subtle performance degradation to complete device failure. Precision integrated circuits may be more susceptible to damage because very small parametric changes could cause the device not to meet its published specifications.

## 9.6 Glossary

| | |
|---|---|
| TI Glossary | This glossary lists and explains terms, acronyms, and definitions. |

# 10 Revision History

NOTE: Page numbers for previous revisions may differ from page numbers in the current version.

**Changes from October 22, 2020 to September 29, 2026 (from Revision A (October 2020) to Revision B (October 2026)) — Page**

- Updated the numbering format for tables, figures, and cross-references throughout the document..... 1
- Changed $V_{T+}$ limits at 2V $V_{CC}$ from 0.7V (min), 1.5V (max) to 1.13V (min), 1.37V (max) .....5
- Added $V_{T+}$ typical values at 2V $V_{CC}$ .....5
- Changed $V_{T+}$ limits at 4.5V $V_{CC}$ from 1.7V (min), 3.15V (max) to 2.31V (min), 2.66V (max) .....5
- Added $V_{T+}$ typical values at 4.5V $V_{CC}$ .....5
- Changed $V_{T+}$ limits at 6V $V_{CC}$ from 2.1V (min), 4.2V (max) to 2.99V (min), 3.44V (max) .....5
- Added $V_{T+}$ typical values at 6V $V_{CC}$ .....5
- Changed $V_{T-}$ limits at 2V $V_{CC}$ from 0.3V (min), 1.0V (max) to 0.55V (min), 0.71V (max).....5
- Added $V_{T-}$ typical values at 2V $V_{CC}$ .....5
- Changed $V_{T-}$ limits at 4.5V $V_{CC}$ from 0.9V (min), 2.2V (max) to 1.21V (min), 1.50V (max) .....5
- Added $V_{T-}$ typical values at 4.5V $V_{CC}$ .....5
- Changed $V_{T-}$ limits at 6V $V_{CC}$ from 1.2V (min), 3.0V (max) to 1.56V (min), 1.99V (max).....5
- Added $V_{T-}$ typical values at 6V $V_{CC}$ .....5
- Changed $\Delta V_T$ limits at 2V $V_{CC}$ from 0.2V (min), 1.0V (max) to 0.54V (min), 0.71V (max).....5


Copyright © 2026 Texas Instruments Incorporated

- Added $\Delta V_T$ typical values at 2V $V_{CC}$ ..... 5
- Changed $\Delta V_T$ limits at 4.5V $V_{CC}$ from 0.4V (min), 1.4V (max) to 0.94V (min), 1.27V (max)..... 5
- Added $\Delta V_T$ typical values at 4.5V $V_{CC}$ ..... 5
- Changed $\Delta V_T$ limits at 6V $V_{CC}$ from 0.6V (min), 1.6V (max) to 1.20V (min), 1.57V (max)..... 5
- Added $\Delta V_T$ typical values at 6V $V_{CC}$ ..... 5


**Changes from April 20, 2020 to October 22, 2020 (from Revision * (April 2020) to Revision A (October 2020))** **Page**


- Updated the numbering format for tables, figures and cross-references throughout the document..... 1
- Improved clarity of functionality for the device..... 8


## 11 Mechanical, Packaging, and Orderable Information

The following pages include mechanical, packaging, and orderable information. This information is the most current data available for the designated devices. This data is subject to change without notice and revision of this document. For browser-based versions of this data sheet, refer to the left-hand navigation.

## PACKAGING INFORMATION

| Orderable part number | Status (1) | Material type (2) | Package \| Pins | Package qty \| Carrier | RoHS (3) | Lead finish/ Ball material (4) | MSL rating/ Peak reflow (5) | Op temp (°C) | Part marking (6) |
|---|---|---|---|---|---|---|---|---|---|
| SN74HCS09QDRQ1 | Active | Production | SOIC (D) \| 14 | 2500 \| LARGE T&R | Yes | NIPDAU | Level-1-260C-UNLIM | -40 to 125 | HCS09Q1 |
| SN74HCS09QDRQ1.A | Active | Production | SOIC (D) \| 14 | 2500 \| LARGE T&R | Yes | NIPDAU | Level-1-260C-UNLIM | -40 to 125 | HCS09Q1 |
| SN74HCS09QPWRQ1 | Active | Production | TSSOP (PW) \| 14 | 2000 \| LARGE T&R | Yes | NIPDAU \| SN | Level-1-260C-UNLIM | -40 to 125 | HCS09Q1 |
| SN74HCS09QPWRQ1.A | Active | Production | TSSOP (PW) \| 14 | 2000 \| LARGE T&R | Yes | NIPDAU | Level-1-260C-UNLIM | -40 to 125 | HCS09Q1 |

(1) **Status:** For more details on status, see our product life cycle.

(2) **Material type:** When designated, preproduction parts are prototypes/experimental devices, and are not yet approved or released for full production. Testing and final process, including without limitation quality assurance, reliability performance testing, and/or process qualification, may not yet be complete, and this item is subject to further changes or possible discontinuation. If available for ordering, purchases will be subject to an additional waiver at checkout, and are intended for early internal evaluation purposes only. These items are sold without warranties of any kind.

(3) **RoHS values:** Yes, No, RoHS Exempt. See the TI RoHS Statement for additional information and value definition.

(4) **Lead finish/Ball material:** Parts may have multiple material finish options. Finish options are separated by a vertical ruled line. Lead finish/Ball material values may wrap to two lines if the finish value exceeds the maximum column width.

(5) **MSL rating/Peak reflow:** The moisture sensitivity level ratings and peak solder (reflow) temperatures. In the event that a part has multiple moisture sensitivity ratings, only the lowest level per JEDEC standards is shown. Refer to the shipping label for the actual reflow temperature that will be used to mount the part to the printed circuit board.

(6) **Part marking:** There may be an additional marking, which relates to the logo, the lot trace code information, or the environmental category of the part.

Multiple part markings will be inside parentheses. Only one part marking contained in parentheses and separated by a "~" will appear on a part. If a line is indented then it is a continuation of the previous line and the two combined represent the entire part marking for that device.

**Important Information and Disclaimer:**The information provided on this page represents TI's knowledge and belief as of the date that it is provided. TI bases its knowledge and belief on information provided by third parties, and makes no representation or warranty as to the accuracy of such information. Efforts are underway to better integrate information from third parties. TI has taken and continues to take reasonable steps to provide representative and accurate information but may not have conducted destructive testing or chemical analysis on incoming materials and chemicals. TI and TI suppliers consider certain information to be proprietary, and thus CAS numbers and other limited information may not be available for release.

In no event shall TI's liability arising out of such information exceed the total purchase price of the TI part(s) at issue in this document sold by TI to Customer on an annual basis.

**OTHER QUALIFIED VERSIONS OF SN74HCS09-Q1 :**

- Catalog : SN74HCS09

NOTE: Qualified Version Definitions:

- Catalog - TI's standard catalog product

## TAPE AND REEL INFORMATION

**REEL DIMENSIONS**

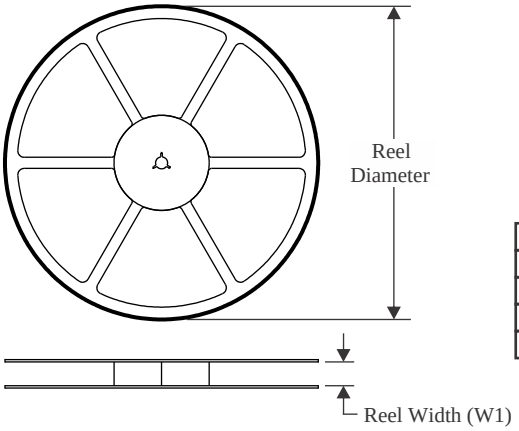


**TAPE DIMENSIONS**

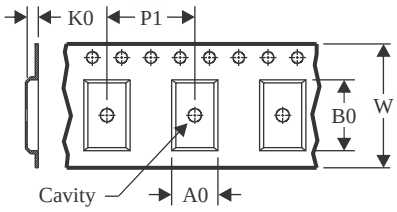


| | |
|---|---|
| A0 | Dimension designed to accommodate the component width |
| B0 | Dimension designed to accommodate the component length |
| K0 | Dimension designed to accommodate the component thickness |
| W | Overall width of the carrier tape |
| P1 | Pitch between successive cavity centers |

**QUADRANT ASSIGNMENTS FOR PIN 1 ORIENTATION IN TAPE**

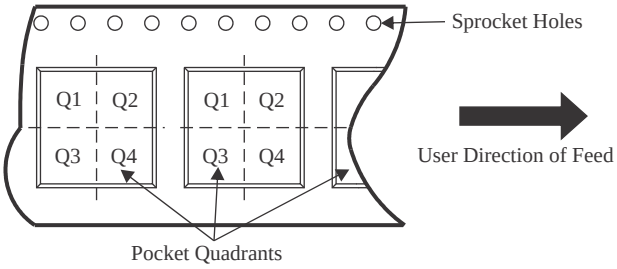


*All dimensions are nominal

| Device | Package Type | Package Drawing | Pins | SPQ | Reel Diameter (mm) | Reel Width W1 (mm) | A0 (mm) | B0 (mm) | K0 (mm) | P1 (mm) | W (mm) | Pin1 Quadrant |
|---|---|---|---|---|---|---|---|---|---|---|---|---|
| SN74HCS09QDRQ1 | SOIC | D | 14 | 2500 | 330.0 | 16.4 | 6.5 | 9.0 | 2.1 | 8.0 | 16.0 | Q1 |
| SN74HCS09QPWRQ1 | TSSOP | PW | 14 | 2000 | 330.0 | 12.4 | 6.9 | 5.6 | 1.6 | 8.0 | 12.0 | Q1 |

TAPE AND REEL BOX DIMENSIONS

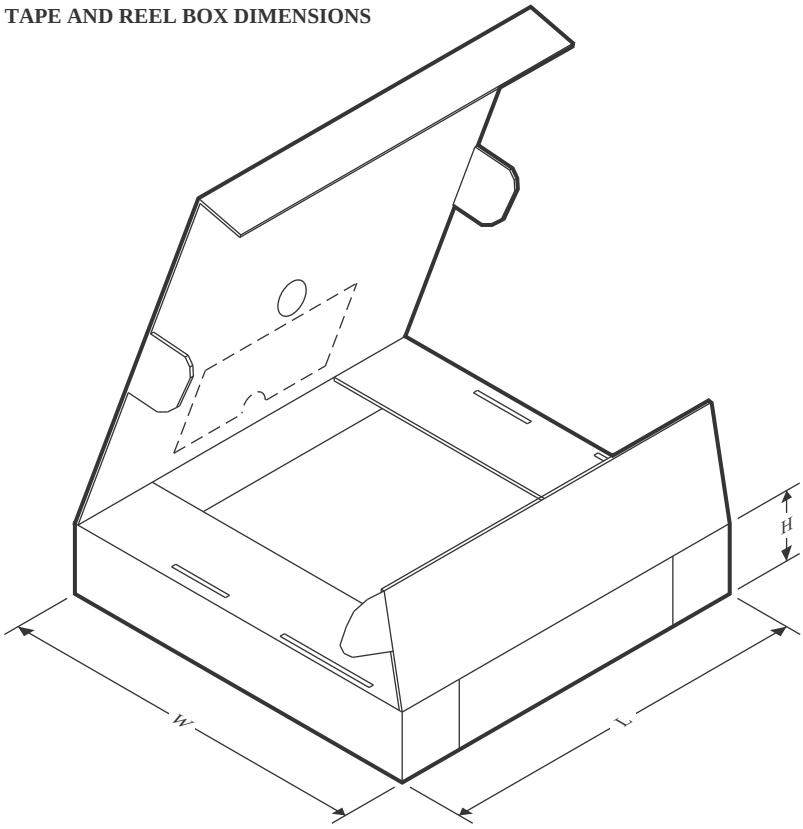


*All dimensions are nominal

| Device | Package Type | Package Drawing | Pins | SPQ | Length (mm) | Width (mm) | Height (mm) |
|---|---|---|---|---|---|---|---|
| SN74HCS09QDRQ1 | SOIC | D | 14 | 2500 | 353.0 | 353.0 | 32.0 |
| SN74HCS09QPWRQ1 | TSSOP | PW | 14 | 2000 | 356.0 | 356.0 | 35.0 |

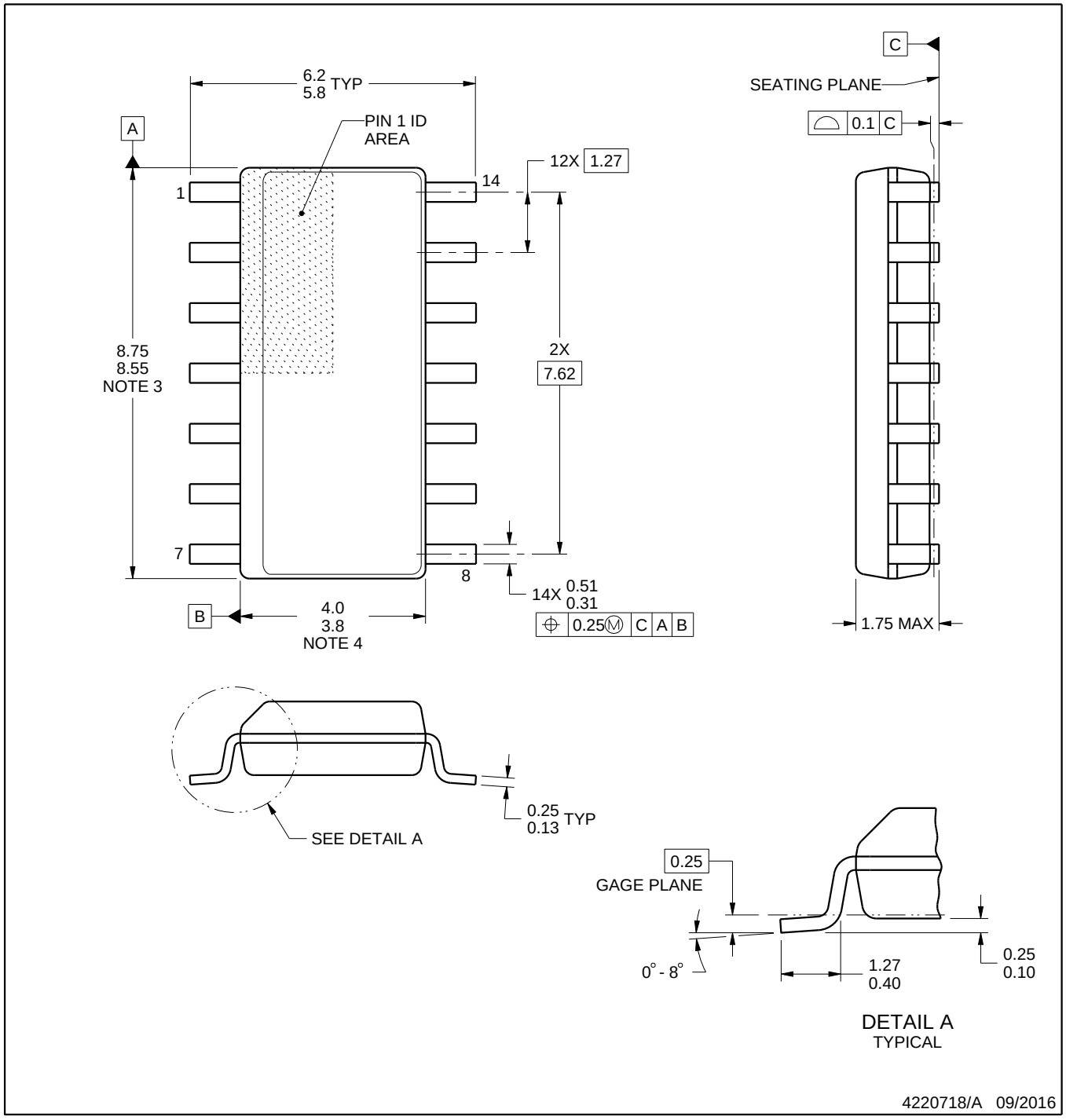


NOTES:

1. All linear dimensions are in millimeters. Dimensions in parenthesis are for reference only. Dimensioning and tolerancing per ASME Y14.5M.
2. This drawing is subject to change without notice.
3. This dimension does not include mold flash, protrusions, or gate burrs. Mold flash, protrusions, or gate burrs shall not exceed 0.15 mm, per side.
4. This dimension does not include interlead flash. Interlead flash shall not exceed 0.43 mm, per side.
5. Reference JEDEC registration MS-012, variation AB.

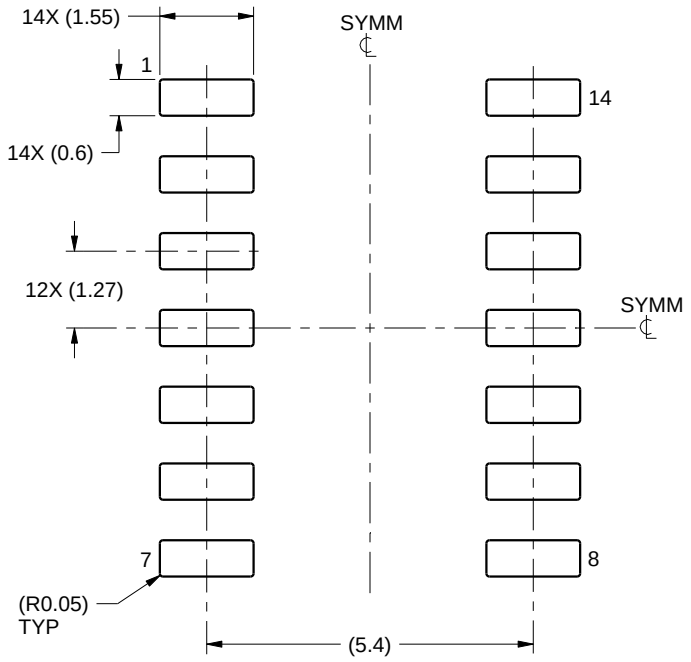


LAND PATTERN EXAMPLE
SCALE:8X

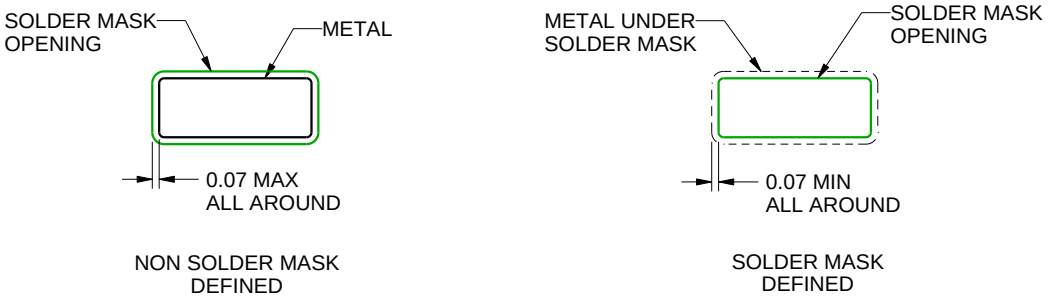


SOLDER MASK DETAILS

4220718/A 09/2016

NOTES: (continued)

6. Publication IPC-7351 may have alternate designs.
7. Solder mask tolerances between and around signal pads can vary based on board fabrication site.

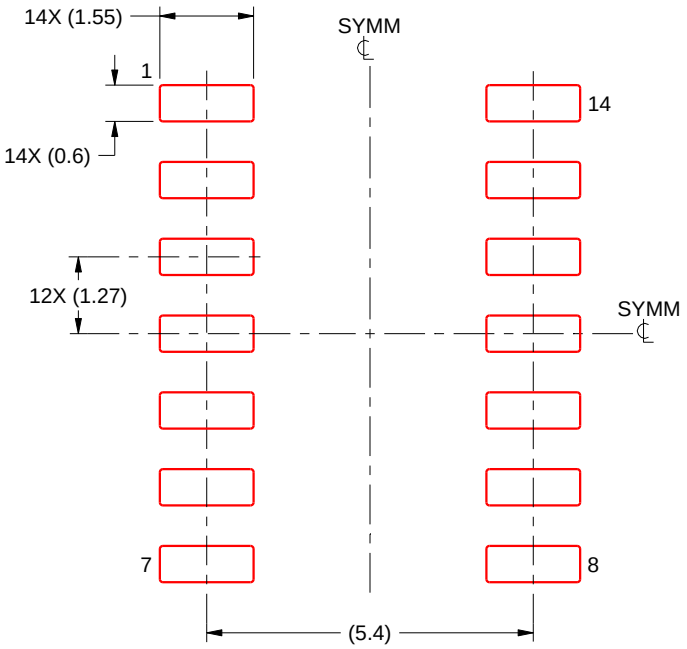


SOLDER PASTE EXAMPLE
BASED ON 0.125 mm THICK STENCIL
SCALE:8X

4220718/A 09/2016

NOTES: (continued)

8. Laser cutting apertures with trapezoidal walls and rounded corners may offer better paste release. IPC-7525 may have alternate design recommendations.
9. Board assembly site may have different recommendations for stencil design.

# PW0014A

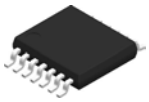

# PACKAGE OUTLINE

## TSSOP - 1.2 mm max height

SMALL OUTLINE PACKAGE

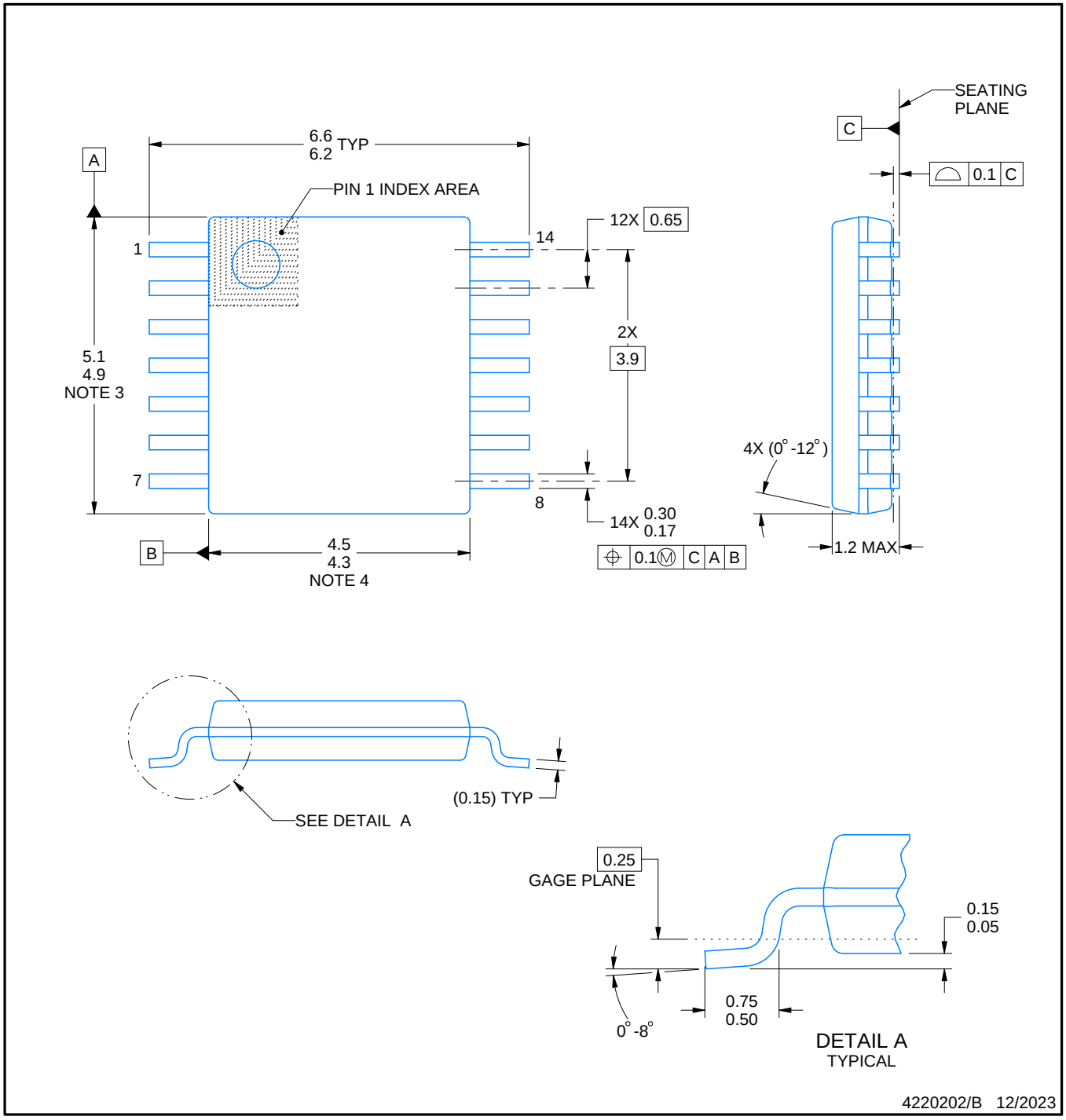


NOTES:

1. All linear dimensions are in millimeters. Any dimensions in parenthesis are for reference only. Dimensioning and tolerancing per ASME Y14.5M.
2. This drawing is subject to change without notice.
3. This dimension does not include mold flash, protrusions, or gate burrs. Mold flash, protrusions, or gate burrs shall not exceed 0.15 mm per side.
4. This dimension does not include interlead flash. Interlead flash shall not exceed 0.25 mm per side.
5. Reference JEDEC registration MO-153.

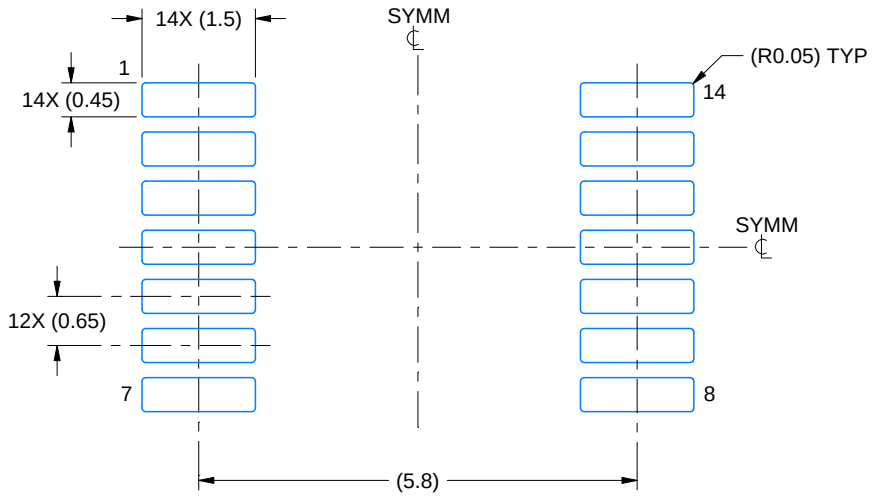


LAND PATTERN EXAMPLE
EXPOSED METAL SHOWN
SCALE: 10X

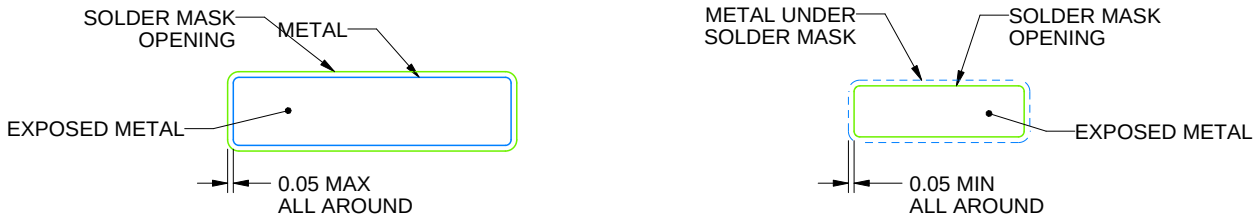


NON-SOLDER MASK DEFINED (PREFERRED)

SOLDER MASK DEFINED

SOLDER MASK DETAILS

4220202/B 12/2023

NOTES: (continued)

6. Publication IPC-7351 may have alternate designs.
7. Solder mask tolerances between and around signal pads can vary based on board fabrication site.

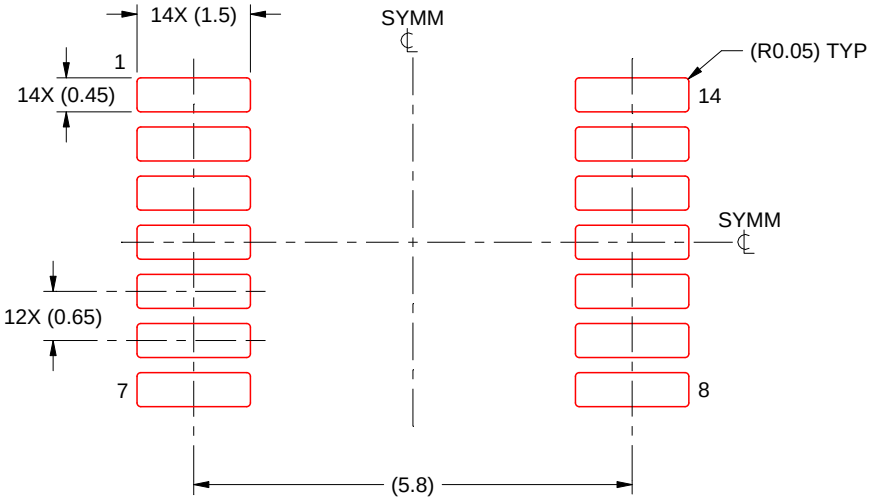


SOLDER PASTE EXAMPLE
BASED ON 0.125 mm THICK STENCIL
SCALE: 10X

4220202/B 12/2023

NOTES: (continued)

8. Laser cutting apertures with trapezoidal walls and rounded corners may offer better paste release. IPC-7525 may have alternate design recommendations.
9. Board assembly site may have different recommendations for stencil design.

# IMPORTANT NOTICE AND DISCLAIMER

TI PROVIDES TECHNICAL AND RELIABILITY DATA (INCLUDING DATASHEETS), DESIGN RESOURCES (INCLUDING REFERENCE DESIGNS), APPLICATION OR OTHER DESIGN ADVICE, WEB TOOLS, SAFETY INFORMATION, AND OTHER RESOURCES “AS IS” AND WITH ALL FAULTS, AND DISCLAIMS ALL WARRANTIES, EXPRESS AND IMPLIED, INCLUDING WITHOUT LIMITATION ANY IMPLIED WARRANTIES OF MERCHANTABILITY, FITNESS FOR A PARTICULAR PURPOSE OR NON-INFRINGEMENT OF THIRD PARTY INTELLECTUAL PROPERTY RIGHTS.

These resources are intended for skilled developers designing with TI products. You are solely responsible for (1) selecting the appropriate TI products for your application, (2) designing, validating and testing your application, and (3) ensuring your application meets applicable standards, and any other safety, security, regulatory or other requirements.

These resources are subject to change without notice. TI grants you permission to use these resources only for development of an application that uses the TI products described in the resource. Other reproduction and display of these resources is prohibited. No license is granted to any other TI intellectual property right or to any third party intellectual property right. TI disclaims responsibility for, and you fully indemnify TI and its representatives against any claims, damages, costs, losses, and liabilities arising out of your use of these resources.

TI’s products are provided subject to TI’s Terms of Sale, TI’s General Quality Guidelines, or other applicable terms available either on ti.com or provided in conjunction with such TI products. TI’s provision of these resources does not expand or otherwise alter TI’s applicable warranties or warranty disclaimers for TI products. Unless TI explicitly designates a product as custom or customer-specified, TI products are standard, catalog, general purpose devices.

TI objects to and rejects any additional or different terms you may propose.

Copyright © 2026, Texas Instruments Incorporated

Last updated 10/2025