SN74LVC2G06 Dual Inverter Buffer and Driver With Open-Drain Outputs

1 Features

- Available in the Texas Instruments package
- Supports 5V V_{CC} operation
- Maximum t_{pd} of 3.4ns at 3.3V
- Low power consumption, 10µA maximum I_{CC}
- ±24mA output drive at 3.3V
- Typical V_{OLP} (output ground bounce) <0.8V at V_{CC} = 3.3V, T_A = 25°C
- Typical V_{OHV} (output V_{OH} undershoot) >2V at V_{CC} = 3.3V, T_A = 25°C
- Inputs and open-drain outputs accept voltages up to 5.5V
- I_{off} supports live insertion, partial-power-down mode and back-drive protection
- Latch-up performance exceeds 100mA per JESD 78, Class II
- Supports down-translation (5V to 3.3V and 3.3V to 1.8V)

2 Applications

- Drive an indicator LED
- Level-shift Using Open-Drain Outputs

3 Description

The SN74LVC2G06 is a dual channel open-drain inverter. This device performs the Boolean function $Y = \overline{A}$.

Package Information

PART NUMBER	PACKAGE(1)	PACKAGE SIZE(2)	BODY SIZE(3)
SN74LVC2G06	DBV (SOT-23, 6)	2.9mm × 2.8mm	2.9mm × 1.6mm
	DCK (SC70, 6)	2mm × 2.1mm	2mm × 1.25mm
	DRY (SON, 6)	1.45mm × 1.00mm	1.45mm × 1.00mm
	DSF (SON, 6)	1.00mm × 1.00mm	1.00mm × 1.00mm
	YZP (DSBGA, 6)	1.41mm × 0.91mm	1.41mm × 0.91mm

(1) For more information, see Mechanical, Packaging, and Orderable Information.
(2) The package size (length × width) is a nominal value and includes pins, where applicable.
(3) The body size (length × width) is a nominal value and does not include pins.

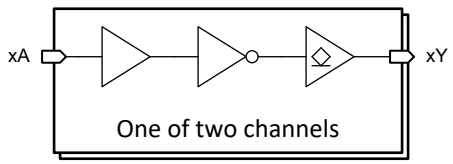

Logic Diagram (Positive Logic)

An IMPORTANT NOTICE at the end of this data sheet addresses availability, warranty, changes, use in safety-critical applications, intellectual property matters and other important disclaimers. PRODUCTION DATA.

Table of Contents

1 Features....1
2 Applications....1
3 Description....1
4 Pin Configuration and Functions....3
5 Specifications....4
5.1 Absolute Maximum Ratings....4
5.2 ESD Ratings....4
5.3 Recommended Operating Conditions....5
5.4 Thermal Information....5
5.5 Electrical Characteristics....6
5.6 Switching Characteristics for –40°C to 85°C....6
5.7 Switching Characteristics for –40°C to 125°C....6
5.8 Operating Characteristics....6
5.9 Typical Characteristics....7
6 Parameter Measurement Information....8
7 Detailed Description....9
7.1 Overview....9
7.2 Functional Block Diagram....9
7.3 Feature Description....9
7.4 Device Functional Modes....10
8 Application and Implementation....11
8.1 Application Information....11
8.2 Typical Application....11
8.3 Power Supply Recommendations....13
8.4 Layout....13
9 Device and Documentation Support....15
9.1 Documentation Support....15
9.2 Receiving Notification of Documentation Updates....15
9.3 Support Resources....15
9.4 Trademarks....15
9.5 Electrostatic Discharge Caution....15
9.6 Glossary....15
10 Revision History....15
11 Mechanical, Packaging, and Orderable Information....17

Copyright © 2026 Texas Instruments Incorporated

4 Pin Configuration and Functions

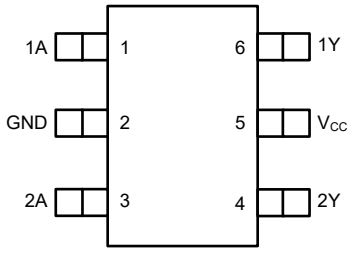

Figure 4-1. DBV, DCK , 6-Pin SOT-23, SOT-SC70 (Top View)

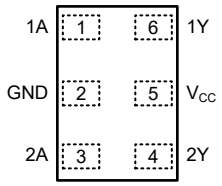

Figure 4-2. DRY, DSF Package, 6-Pin SON (Top View)

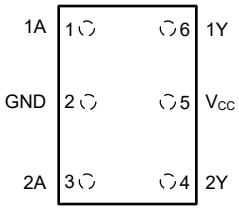

Figure 4-3. YZP Package 6-PIN DSBGA Top View

Table 4-1. Pin Functions

PIN		TYPE[1]	DESCRIPTION
NAME	NO.		
1A	1	I	Input channel 1
1Y	6	O	Output channel 1
2A	3	I	Ground Pin
2Y	4	O	Output channel 2
GND	2	G	Input channel 2
V_{CC}	5	P	Power Pin

(1) I = Input, O = Output, G = Ground, P = Power

Copyright © 2026 Texas Instruments Incorporated

5 Specifications

5.1 Absolute Maximum Ratings

over operating free-air temperature range (unless otherwise noted)(1)

			MIN	MAX	UNIT
V_{CC}	Supply voltage		–0.5	6.5	V
V_I	Input voltage(2)		–0.5	6.5	V
V_O	Voltage applied to any output in the high-impedance or power-off state(2)		–0.5	6.5	V
V_O	Voltage applied to any output in the high or low state(2)(3)		–0.5	6.5	V
I_{IK}	Input clamp current	$V_I < 0$		–50	mA
I_{OK}	Output clamp current	$V_O < 0$		–50	mA
I_O	Continuous output current			±50	mA
	Continuous current through V_{CC} or GND			±100	mA
T_{stg}	Storage Temperature		–65	150	°C

(1) Operation outside the *Absolute Maximum Ratings* may cause permanent device damage. *Absolute Maximum Ratings* do not imply functional operation of the device at these or any other conditions beyond those listed under *Recommended Operating Conditions*. If used outside the *Recommended Operating Conditions* but within the *Absolute Maximum Ratings*, the device may not be fully functional, and this may affect device reliability, functionality, performance, and shorten the device lifetime.
(2) The input negative-voltage and output voltage ratings can be exceeded if the input and output current ratings are observed.
(3) The value of V_{CC} is provided in the *Recommended Operating Conditions* table.

5.2 ESD Ratings

			VALUE	UNIT
$V_{(ESD)}$	Electrostatic discharge	Human body model (HBM), per ANSI/ESDA/JEDEC JS-001(1)	+2000	V
		Charged-device model (CDM), per ANSI/ESDA/JEDEC JS-002(2)	+1000	

(1) JEDEC document JEP155 states that 500V HBM allows safe manufacturing with a standard ESD control process.
(2) JEDEC document JEP157 states that 250V CDM allows safe manufacturing with a standard ESD control process.

Copyright © 2026 Texas Instruments Incorporated

5.3 Recommended Operating Conditions

over operating free-air temperature range (unless otherwise noted)(1)

			MIN	NOM	MAX	UNIT
V_{CC}	Supply voltage	Operating	1.65		5.5	V
		Data retention only	1.5			
V_{IH}	High-level input voltage	V_{CC} = 1.65V to 1.95V	0.65 × V_{CC}			V
		V_{CC} = 2.3V to 2.7V	1.7			
		V_{CC} = 3V to 3.6V	2			
		V_{CC} = 4.5V to 5.5V	0.7 × V_{CC}			
V_{IL}	Low-level input voltage	V_{CC} = 1.65V to 1.95V			0.35 × V_{CC}	V
		V_{CC} = 2.3V to 2.7V			0.7	
		V_{CC} = 3V to 3.6V			0.8	
		V_{CC} = 4.5V to 5.5V			0.3 × V_{CC}	
V_I	Input voltage		0		5.5	V
V_O	Output voltage		0		5.5	V
I_{OL}	Low-level output current	V_{CC} = 1.65V			4	mA
		V_{CC} = 2.3V			8	
		V_{CC} = 3V			16	
					24	
		V_{CC} = 4.5V			32	
Δt/Δv	Input transition rise or fall rate	V_{CC} = 1.8V ± 0.15V, 2.5V ± 0.2V			20	ns/V
		V_{CC} = 3.3V ± 0.3V			10	
		V_{CC} = 5V ± 0.5V			5	
T_A	Operating free-air temperature		–40		125	°C

(1) All unused inputs of the device must be held at V_{CC} or GND to ensure proper device operation. Refer to the TI application note, *Implications of Slow or Floating CMOS Inputs*.

5.4 Thermal Information

PACKAGE	PINS	THERMAL METRIC(1)						UNIT
		$R_{\theta JA}$	$R_{\theta JC(top)}$	$R_{\theta JB}$	Ψ_{JT}	Ψ_{JB}	$R_{\theta JC(bot)}$	
DBV (SOT-23, 6)	6	225.5	155.0	138.2	84.2	137.9	-	°C/W
DCK (SOT-SC70, 6)	6	254.1	191.3	158.1	92.5	158.0	-	°C/W
DRY (SON, 6)	6	234	-	-	-	-	-	°C/W
DSF (SON, 6)	6	300	-	-	-	-	-	°C/W
YZP (DSBGA, 6)	6	123	-	-	-	-	-	°C/W

(1) For more information about traditional and new thermal metrics, see the Semiconductor and IC Package Thermal Metrics application note.

Copyright © 2026 Texas Instruments Incorporated

5.5 Electrical Characteristics

over recommended operating free-air temperature range (unless otherwise noted)

PARAMETER		TEST CONDITIONS	V_{CC}	–40°C to 85°C			–40°C to 125°C			UNIT
				MIN	TYP(1)	MAX	MIN	TYP(1)	MAX	
V_{OL}		I_{OL} = 100µA	1.65V to 5.5V			0.1			0.1	V
		I_{OL} = 4mA	1.65V			0.45			0.45	
		I_{OL} = 8mA	2.3V			0.3			0.3	
		I_{OL} = 16mA	3V			0.4			0.4	
		I_{OL} = 24mA				0.55			0.55	
		I_{OL} = 32mA	4.5V			0.55			0.55	
I_I	A inputs	V_I = 5.5V or GND	0 to 5.5V			±5			±5	µA
I_{off}		V_I or V_O = 5.5V	0			±10			±10	µA
I_{CC}		V_I = 5.5V or GND, I_O = 0	1.65V to 5.5V			10			10	µA
ΔI_{CC}		One input at V_{CC} – 0.6V, Other inputs at V_{CC} or GND	3V to 5.5V			500			500	µA
C_i		V_I = V_{CC} or GND	3.3V		3.5			3.5		pF

(1) All typical values are at V_{CC} = 3.3V, T_A = 25°C.

5.6 Switching Characteristics for –40°C to 85°C

over recommended operating free-air temperature range (unless otherwise noted) (see Figure 6-1)

PARAMETER	FROM (INPUT)	TO (OUTPUT)	V_{CC} = 1.8V ± 0.15V		V_{CC} = 2.5V ± 0.2V		V_{CC} = 3.3V ± 0.3V		V_{CC} = 5V ± 0.5V		UNIT
			MIN	MAX	MIN	MAX	MIN	MAX	MIN	MAX	
t_{pd}	A	Y	1.8	7.2	1	3.9	1	3.4	1	2.9	ns

5.7 Switching Characteristics for –40°C to 125°C

over recommended operating free-air temperature range (unless otherwise noted) (see Figure 6-1)

PARAMETER	FROM (INPUT)	TO (OUTPUT)	V_{CC} = 1.8V ± 0.15V		V_{CC} = 2.5V ± 0.2V		V_{CC} = 3.3V ± 0.3V		V_{CC} = 5V ± 0.5V		UNIT
			MIN	MAX	MIN	MAX	MIN	MAX	MIN	MAX	
t_{pd}	A	Y	1.8	8.2	1	4.4	1	3.9	1	3.4	ns

5.8 Operating Characteristics

T_A = 25°C

PARAMETER		TEST CONDITIONS	V_{CC} = 1.8V	V_{CC} = 2.5V	V_{CC} = 3.3V	V_{CC} = 5V	UNIT
			TYP	TYP	TYP	TYP	
C_{pd}	Power dissipation capacitance	f = 10MHz	2	2	3	4	pF

Copyright © 2026 Texas Instruments Incorporated

5.9 Typical Characteristics

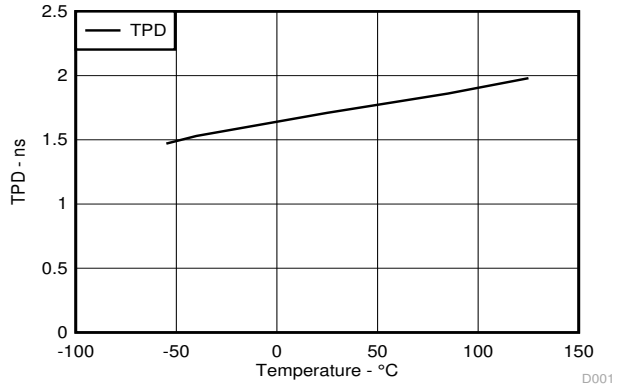

Figure 5-1. TPD Across Temperature at 3.3V V_{CC}

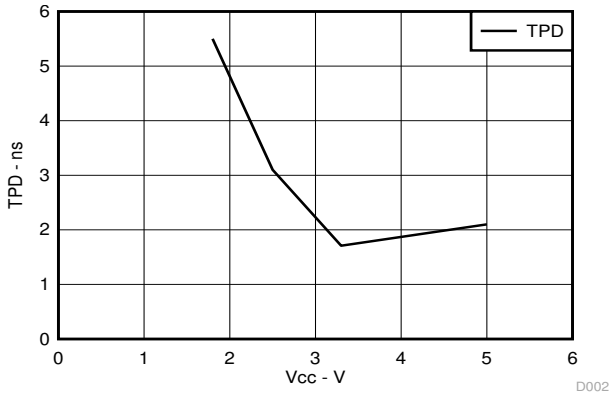

Figure 5-2. TPD Across V_{CC} at 25°C

6 Parameter Measurement Information

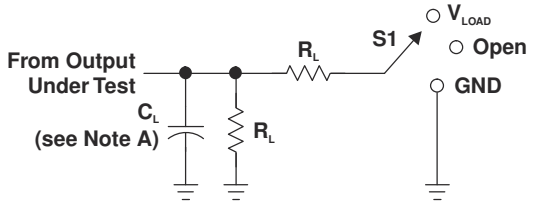

LOAD CIRCUIT

TEST	S1
t_{PZL} (see Notes E and F)	V_{LOAD}
t_{PLZ} (see Notes E and G)	V_{LOAD}
t_{PHZ}/t_{PZH}	V_{LOAD}

V_{CC}	INPUTS		V_M	V_{LOAD}	C_L	R_L	V_Δ
	V_I	t_r/t_f					
1.8 V ± 0.15 V	V_{CC}	≤2 ns	$V_{CC}/2$	2 × V_{CC}	30 pF	1 kΩ	0.15 V
2.5 V ± 0.2 V	V_{CC}	≤2 ns	$V_{CC}/2$	2 × V_{CC}	30 pF	500 Ω	0.15 V
3.3 V ± 0.3 V	3 V	≤2.5 ns	1.5 V	6 V	50 pF	500 Ω	0.3 V
5 V ± 0.5 V	V_{CC}	≤2.5 ns	$V_{CC}/2$	2 × V_{CC}	50 pF	500 Ω	0.3 V

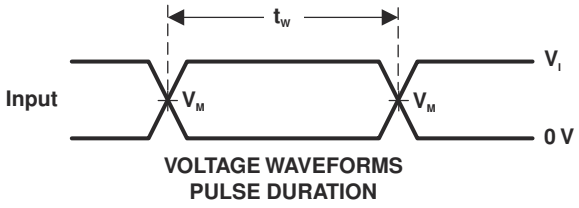

VOLTAGE WAVEFORMS
PULSE DURATION

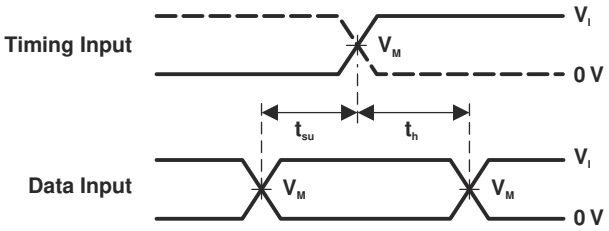

VOLTAGE WAVEFORMS
SETUP AND HOLD TIMES

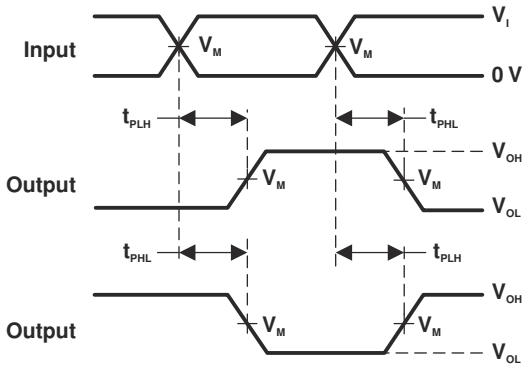

VOLTAGE WAVEFORMS
PROPAGATION DELAY TIMES
INVERTING AND NONINVERTING OUTPUTS

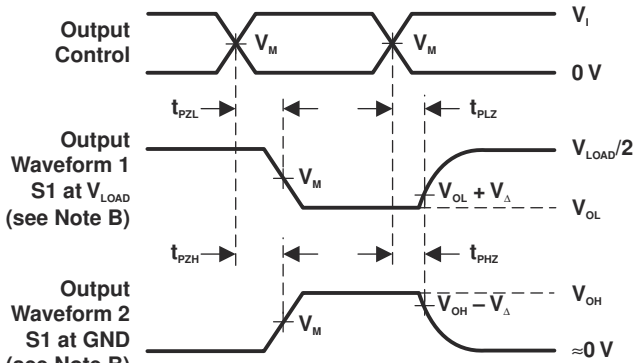

VOLTAGE WAVEFORMS
ENABLE AND DISABLE TIMES
LOW- AND HIGH-LEVEL ENABLING

NOTES: A. C_L includes probe and jig capacitance.
B. Waveform 1 is for an output with internal conditions such that the output is low, except when disabled by the output control. Waveform 2 is for an output with internal conditions such that the output is high, except when disabled by the output control.
C. All input pulses are supplied by generators have the following characteristics: PRR ≤ 10 MHz, Z_O = 50 Ω.
D. The outputs are measured one at a time, with one transition per measurement.
E. Because this device has open-drain outputs, t_{PLZ} and t_{PZL} are the same as t_{PD}.
F. t_{PZL} is measured at V_M.
G. t_{PLZ} is measured at V_{OL} + V_Δ.
H. All parameters and waveforms are not applicable to all devices.

Figure 6-1. Load Circuit and Voltage Waveforms (Open Drain)

Copyright © 2026 Texas Instruments Incorporated

7 Detailed Description

7.1 Overview

The SN74LVC2G06 contains two open-drain inverters and performs the Boolean function Y = $\overline{A}$. The device functions as two independent inverters.

This device is fully specified for partial-power-down applications using I_{off}. The I_{off} circuitry disables the outputs, preventing damaging current backflow through the device when it is powered down.

7.2 Functional Block Diagram

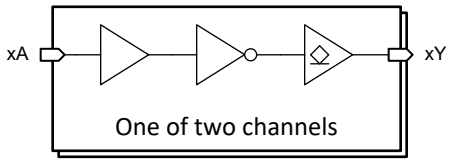

Figure 7-1. Logic Diagram (Positive Logic)

7.3 Feature Description

7.3.1 Open-Drain CMOS Outputs

Open-drain outputs are included in SN74LVC2G06. Open-drain outputs can only drive the output low. When in the high logical state, outputs are in a high-impedance state, meaning outputs neither source nor sink current (with the exception of minor leakage current as defined in the *Electrical Characteristics* table). In the high-impedance state, the output voltage is not controlled by SN74LVC2G06 and is dependent on external factors.

Because of the high-impedance state, an external pull-up resistor is required to define a logic high. Without a pull-up resistor, the output floats and has an undefined logic level. The resistor value depends on factors like parasitic capacitance and power consumption; typically, a 10kΩ resistor is suitable.

The drive capability of SN74LVC2G06 can create fast edges into light loads, so consider routing and load conditions to prevent ringing. Additionally, outputs can drive higher currents than SN74LVC2G06 is designed to handle continuously. Limit the device output power to avoid damage due to overcurrent. Follow the electrical and thermal limits defined in the *Absolute Maximum Ratings* at all times. See the *Recommended Operating Conditions* table for the maximum output voltage that can be externally connected to SN74LVC2G06.

Leave unused open-drain CMOS outputs disconnected.

7.3.2 Partial Power Down (I_{off})

This device includes circuitry to disable all outputs when the supply pin is held at 0V. When disabled, the outputs neither source nor sink current, regardless of the input voltages. The amount of leakage current at each output is defined by the I_{off} specification in the *Electrical Characteristics* table.

7.3.3 Standard CMOS Inputs

This device includes standard CMOS inputs. Standard CMOS inputs are high impedance and are typically modeled as a resistor in parallel with the input capacitance given in the *Electrical Characteristics*. The worst case resistance is calculated with the maximum input voltage, given in the *Absolute Maximum Ratings*, and the maximum input leakage current, given in the *Electrical Characteristics*, using Ohm's law (R = V ÷ I).

Standard CMOS inputs require that input signals transition between valid logic states quickly, as defined by the input transition time or rate in the *Recommended Operating Conditions* table. Failing to meet this specification results in excessive power consumption and can cause oscillations. See more details in *Implications of Slow or Floating CMOS Inputs*.

Do not leave standard CMOS inputs floating at any time during operation. Terminate unused inputs at V_{CC} or GND. If a system does not always drive an input, consider adding a pull-up or pull-down resistor to provide a

Copyright © 2026 Texas Instruments Incorporated

valid input voltage. The resistor value depends on multiple factors; a 10kΩ resistor, however, is recommended and typically meets all requirements.

7.3.4 Clamp Diode Structure

Figure 7-2 shows the inputs and outputs to this device have negative clamping diodes only.

CAUTION

Voltages beyond the values specified in the *Absolute Maximum Ratings* table can cause damage to the device. The input and output voltage ratings can be exceeded if the input and output clamp-current ratings are observed.

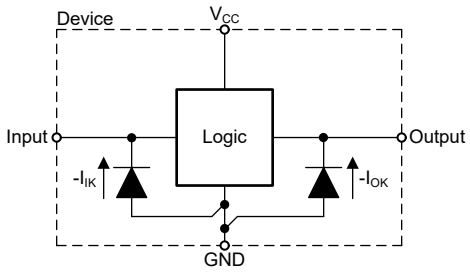

Figure 7-2. Electrical Placement of Clamping Diodes for Each Input and Output

7.3.5 Over-Voltage Tolerant Inputs

The SN74LVC2G06 includes over-voltage tolerant inputs. The input pins support high-state input voltages larger than the supply voltage by utilizing an input protection circuit that does not include a standard positive clamp diode. See *Recommended Operating Conditions* for the recommended input voltage.

CAUTION

Do not exceed the maximum input voltage range provided in *Absolute Maximum Ratings*. Exceeding the maximum input voltage range rating can cause immediate and permanent damage to the device.

7.4 Device Functional Modes

Table 7-1 lists the functional modes of the SN74LVC2G06.

Table 7-1. Functional Table (Each Inverter)

INPUT A	OUTPUT Y(1)
H	L
L	Z

(1) H = High Voltage Level, L = Low Voltage Level, Z = High-impedance

Copyright © 2026 Texas Instruments Incorporated

8 Application and Implementation

Note

Information in the following applications sections is not part of the TI component specification, and TI does not warrant its accuracy or completeness. TI's customers are responsible for determining suitability of components for their purposes, as well as validating and testing their design implementation to confirm system functionality.

8.1 Application Information

The SN74LVC2G06 can be used to drive signals over relatively long traces or transmission lines. A series damping resistor placed in series with the transmitter's output can be used to reduce ringing caused by impedance mismatches between the driver, transmission line, and receiver. The figure in the *Application Curve* section shows the received signal with three separate resistor values. Just a small amount of resistance can make a significant impact on signal integrity in this type of application.

8.2 Typical Application

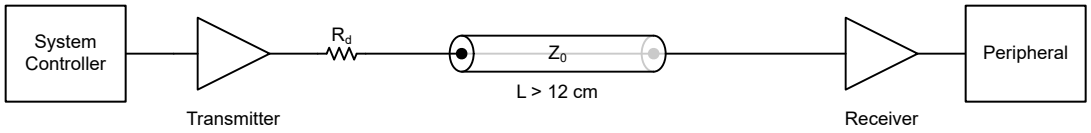

Figure 8-1. Typical Application Block Diagram

8.2.1 Design Requirements

8.2.1.1 Power Considerations

Verify that the desired supply voltage is within the range specified in the *Electrical Characteristics*. The supply voltage sets the device electrical characteristics, as described in the *Electrical Characteristics* section.

The positive voltage supply must be capable of sourcing current equal to the maximum static supply current, I_{CC}, listed in the *Electrical Characteristics*, and any transient current required for switching.

The ground must be capable of sinking current equal to the total current to be sunk by all outputs of the SN74LVC2G06 plus the maximum supply current, I_{CC}, listed in the *Electrical Characteristics*, and any transient current required for switching. The logic device can only sink as much current that can be sunk into the ground connection. Verify that the maximum total current through GND listed in the *Absolute Maximum Ratings* is not exceeded.

The SN74LVC2G06 can drive a load with a total capacitance less than or equal to 50pF while still meeting all of the datasheet specifications. Larger capacitive loads can be applied; however, TI recommends adding a series resistor between the output and capacitor to prevent excessive current.

The SN74LVC2G06 can drive a load with total resistance described by $R_L \geq V_O / I_O$, with the output voltage and current defined in the *Electrical Characteristics* table with V_{OL}. When outputting in the HIGH state, the output voltage in the equation is defined as the difference between the measured output voltage and the supply voltage at the V_{CC} pin.

Total power consumption can be calculated using the information provided in the *CMOS Power Consumption and Cpd Calculation application note*.

Thermal increase can be calculated using the information provided in the *Thermal Characteristics of Standard Linear and Logic (SLL) Packages and Devices application note*.

Copyright © 2026 Texas Instruments Incorporated

CAUTION

The maximum junction temperature, $T_{J(max)}$ listed in the *Absolute Maximum Ratings*, is an additional limitation to prevent damage to the device. Do not violate any values listed in the *Absolute Maximum Ratings*. These limits are provided to prevent damage to the device.

8.2.1.2 Input Considerations

Input signals must cross $V_{IL(max)}$ to be considered a logic LOW, and $V_{IH(min)}$ to be considered a logic HIGH. Do not exceed the maximum input voltage range found in the *Absolute Maximum Ratings*.

Unused inputs must be terminated to either V_{CC} or ground. The unused inputs can be directly terminated if the input is completely unused, or the inputs can be connected with a pullup or pulldown resistor if the input is used sometimes, but not always. A pullup resistor is used for a default state of HIGH, and a pulldown resistor is used for a default state of LOW. The drive current of the controller, leakage current into the SN74LVC2G06 (as specified in the *Electrical Characteristics*), and the desired input transition rate limits the resistor size. A 10kΩ resistor value is often used due to these factors.

The SN74LVC2G06 has CMOS inputs and thus requires fast input transitions to operate correctly, as defined in the Electrical Characteristics table. Slow input transitions can cause oscillations, additional power consumption, and reduction in device reliability.

See the *Feature Description* for additional information regarding the inputs for this device.

8.2.1.3 Output Considerations

The ground voltage is used to produce the output LOW voltage. Sinking current into the output increases the output voltage as specified by the V_{OL} specification in the *Electrical Characteristics*.

Open-drain outputs can be connected together directly to produce a wired-AND configuration or for additional output drive strength.

Unused outputs can be left floating. Do not connect outputs directly to V_{CC} or ground.

Refer to the *Feature Description* section for additional information regarding the outputs for this device.

8.2.2 Detailed Design Procedure

1. Add a decoupling capacitor from V_{CC} to GND. The capacitor needs to be placed physically close to the device and electrically close to both the V_{CC} and GND pins. An example layout is shown in the *Layout* section.
2. Verify that the capacitive load at the output is ≤ 50pF. Low load capacitance can be accomplished by providing short, appropriately sized traces from the SN74LVC2G06 to the receiving device.
3. Verify that the resistive load at the output is larger than (V_{CC} / $I_{O(max)}$)Ω. Never violate the maximum output current from the *Absolute Maximum Ratings*. Most CMOS inputs have a resistive load measured in MΩ; much larger than the minimum calculated previously.
4. Thermal issues are rarely a concern for logic gates; however, the power consumption and thermal increase can be calculated using the steps provided in the *CMOS Power Consumption and Cpd Calculation application note*.

Copyright © 2026 Texas Instruments Incorporated

8.2.3 Application Curve

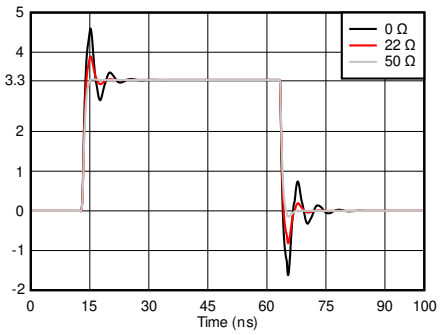

Figure 8-2. Simulated Signal Integrity at the Receiver With Different Damping Resistor (R_d) Values

8.3 Power Supply Recommendations

The power supply can be any voltage between the minimum and maximum supply voltage rating listed in the *Recommended Operating Conditions*.

Verify that each V_{CC} terminal has a good bypass capacitor to prevent power disturbance. For the SN74LVC2G06, a 0.1µF bypass capacitor is recommended. To reject different frequencies of noise, use multiple bypass capacitors in parallel. Capacitors with values of 0.1µF and 1µF are commonly used in parallel.

8.4 Layout

8.4.1 Layout Guidelines

- Bypass capacitor placement
  - Place near the positive supply terminal of the device
  - Provide an electrically short ground return path
  - Use wide traces to minimize impedance
  - Keep the device, capacitors, and traces on the same side of the board whenever possible
- Signal trace geometry
  - 8mil to 12mil trace width
  - Lengths less than 12cm to minimize transmission line effects
  - Avoid 90° corners for signal traces
  - Use an unbroken ground plane below signal traces
  - Flood fill areas around signal traces with ground
  - Parallel traces must be separated by at least 3x dielectric thickness
  - For traces longer than 12cm
    - Use impedance controlled traces
    - Source-terminate using a series damping resistor near the output
    - Avoid branches; buffer each signal that must branch separately

Copyright © 2026 Texas Instruments Incorporated

8.4.2 Layout Example

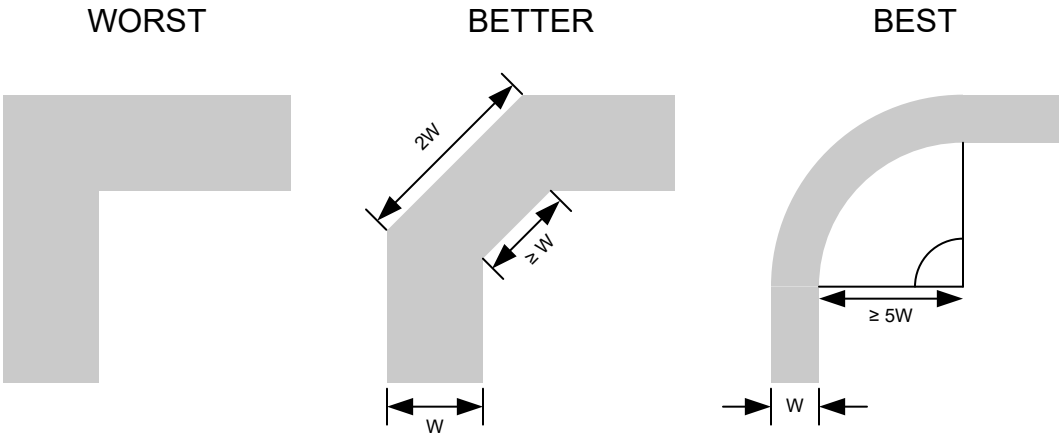

Figure 8-3. Example Trace Corners for Improved Signal Integrity

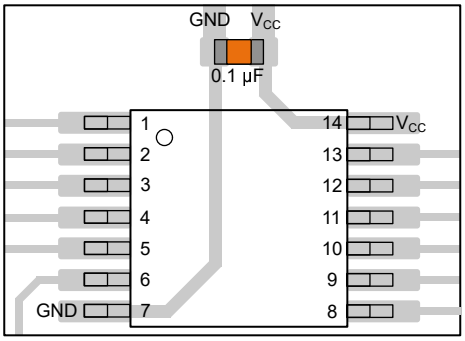

Figure 8-4. Example Bypass Capacitor Placement for TSSOP and Similar Packages

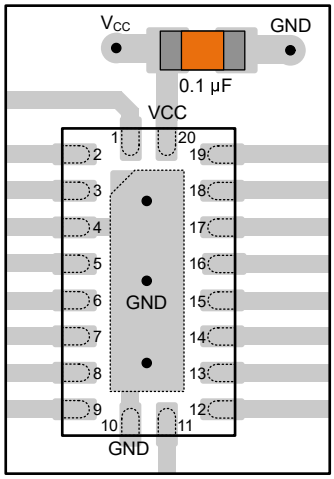

Figure 8-5. Example Bypass Capacitor Placement for WQFN and Similar Packages

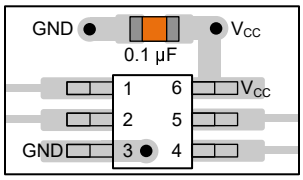

Figure 8-6. Example Bypass Capacitor Placement for SOT, SC70 and Similar Packages

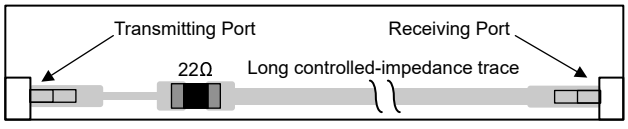

Figure 8-7. Example Damping Resistor Placement for Improved Signal Integrity

Copyright © 2026 Texas Instruments Incorporated

9 Device and Documentation Support

TI offers an extensive line of development tools. Tools and software to evaluate the performance of the device, generate code, and develop solutions are listed below.

9.1 Documentation Support

9.1.1 Related Documentation

For related documentation, see the following:

- Texas Instruments, *CMOS Power Consumption and C_{pd} Calculation* application note
- Texas Instruments, *Designing With Logic* application note
- Texas Instruments, *Implications of Slow or Floating CMOS Inputs* application brief
- Texas Instruments, *Logic in Live-Insertion Applications With a Focus on GTLP* application note
- Texas Instruments, *Semiconductor and IC Package Thermal Metrics* application note
- Texas Instruments, *Texas Instruments General Quality Guidelines*
- Texas Instruments, *Thermal Characteristics of SLL Packages and Devices* application note
- Texas Instruments, *Understanding Schmitt Triggers* application brief

9.2 Receiving Notification of Documentation Updates

To receive notification of documentation updates, navigate to the device product folder on ti.com. Click on *Notifications* to register and receive a weekly digest of any product information that has changed. For change details, review the revision history included in any revised document.

9.3 Support Resources

TI E2E™ support forums are an engineer's go-to source for fast, verified answers and design help — straight from the experts. Search existing answers or ask your own question to get the quick design help you need.

Linked content is provided "AS IS" by the respective contributors. They do not constitute TI specifications and do not necessarily reflect TI's views; see TI's Terms of Use.

9.4 Trademarks

TI E2E™ is a trademark of Texas Instruments.
All trademarks are the property of their respective owners.

9.5 Electrostatic Discharge Caution



This integrated circuit can be damaged by ESD. Texas Instruments recommends that all integrated circuits be handled with appropriate precautions. Failure to observe proper handling and installation procedures can cause damage.

ESD damage can range from subtle performance degradation to complete device failure. Precision integrated circuits may be more susceptible to damage because very small parametric changes could cause the device not to meet its published specifications.

9.6 Glossary

TI Glossary	This glossary lists and explains terms, acronyms, and definitions.

10 Revision History

NOTE: Page numbers for previous revisions may differ from page numbers in the current version.

Changes from February 1, 2014 to November 17, 2026 (from Revision J (February 2014) to Revision K (November 2026)) **Page**

- Updated the numbering format for tables, figures, and cross-references throughout the document..... 1
- Updated format for *Thermal Information* table.....5
- Changed Junction-to-ambient thermal resistance value for DBV package from: 165°C/W to: 225.5°C/W..... 5
- Changed Junction-to-ambient thermal resistance value for DCK package from: 259°C/W to: 254.1°C/W.....5

Copyright © 2026 Texas Instruments Incorporated

- Added parallel trace spacing recommendation to layout guidelines. Changed wording of "Avoid branches; buffer signals that must branch separately" to "Avoid branches; buffer each signal that must branch separately"..... 13

Changes from Revision I (December 2013) to Revision J (February 2014) **Page**

- Added *Device Information table*, *Pin Configuration and Functions* section, *ESD Ratings* table, *Typical Characteristics* section, *Feature Description* section, *Device Functional Modes*, *Application and Implementation* section, *Power Supply Recommendations* section, *Layout* section, *Device and Documentation Support* section, and *Mechanical, Packaging, and Orderable Information* section 1

Copyright © 2026 Texas Instruments Incorporated

11 Mechanical, Packaging, and Orderable Information

The following pages include mechanical, packaging, and orderable information. This information is the most current data available for the designated devices. This data is subject to change without notice and revision of this document. For browser-based versions of this datasheet, refer to the left-hand navigation.

Copyright © 2026 Texas Instruments Incorporated

PACKAGING INFORMATION

Orderable part number	Status (1)	Material type (2)	Package | Pins	Package qty | Carrier	RoHS (3)	Lead finish/ Ball material (4)	MSL rating/ Peak reflow (5)	Op temp (°C)	Part marking (6)
SN74LVC2G06DBVR	Active	Production	SOT-23 (DBV) | 6	3000 | LARGE T&R	Yes	NIPDAU	Level-1-260C-UNLIM	-40 to 125	(C065, C06R)
SN74LVC2G06DBVR.B	Active	Production	SOT-23 (DBV) | 6	3000 | LARGE T&R	Yes	NIPDAU	Level-1-260C-UNLIM	-40 to 125	(C065, C06R)
SN74LVC2G06DBVRE4	Active	Production	SOT-23 (DBV) | 6	3000 | LARGE T&R	Yes	NIPDAU	Level-1-260C-UNLIM	-40 to 125	(C065, C06R)
SN74LVC2G06DCKR	Active	Production	SC70 (DCK) | 6	3000 | LARGE T&R	Yes	NIPDAU | SN	Level-1-260C-UNLIM	-40 to 125	(CT5, CTJ, CTR)
SN74LVC2G06DCKR.B	Active	Production	SC70 (DCK) | 6	3000 | LARGE T&R	Yes	SN	Level-1-260C-UNLIM	-40 to 125	(CT5, CTJ, CTR)
SN74LVC2G06DCKRE4	Active	Production	SC70 (DCK) | 6	3000 | LARGE T&R	Yes	NIPDAU	Level-1-260C-UNLIM	-40 to 125	CT5
SN74LVC2G06DCKRG4	Active	Production	SC70 (DCK) | 6	3000 | LARGE T&R	Yes	NIPDAU	Level-1-260C-UNLIM	-40 to 125	CT5
SN74LVC2G06DCKRG4.B	Active	Production	SC70 (DCK) | 6	3000 | LARGE T&R	Yes	NIPDAU	Level-1-260C-UNLIM	-40 to 125	CT5
SN74LVC2G06DRYR	Active	Production	SON (DRY) | 6	5000 | LARGE T&R	Yes	NIPDAU	Level-1-260C-UNLIM	-40 to 125	CT
SN74LVC2G06DRYR.B	Active	Production	SON (DRY) | 6	5000 | LARGE T&R	Yes	NIPDAU	Level-1-260C-UNLIM	-40 to 125	CT
SN74LVC2G06DRYRG4	Active	Production	SON (DRY) | 6	5000 | LARGE T&R	Yes	NIPDAU	Level-1-260C-UNLIM	-40 to 125	CT
SN74LVC2G06DRYRG4.B	Active	Production	SON (DRY) | 6	5000 | LARGE T&R	Yes	NIPDAU	Level-1-260C-UNLIM	-40 to 125	CT
SN74LVC2G06DSFR	Active	Production	SON (DSF) | 6	5000 | LARGE T&R	Yes	NIPDAU	Level-1-260C-UNLIM	-40 to 125	CT
SN74LVC2G06DSFR.B	Active	Production	SON (DSF) | 6	5000 | LARGE T&R	Yes	NIPDAU	Level-1-260C-UNLIM	-40 to 125	CT
SN74LVC2G06DSFRG4	Active	Production	SON (DSF) | 6	5000 | LARGE T&R	Yes	NIPDAU	Level-1-260C-UNLIM	-40 to 125	CT
SN74LVC2G06DSFRG4.B	Active	Production	SON (DSF) | 6	5000 | LARGE T&R	Yes	NIPDAU	Level-1-260C-UNLIM	-40 to 125	CT
SN74LVC2G06YZPR	Active	Production	DSBGA (YZP) | 6	3000 | LARGE T&R	Yes	SNAGCU	Level-1-260C-UNLIM	-40 to 85	(CT7, CTN)
SN74LVC2G06YZPR.B	Active	Production	DSBGA (YZP) | 6	3000 | LARGE T&R	Yes	SNAGCU	Level-1-260C-UNLIM	-40 to 85	(CT7, CTN)

(1) **Status:** For more details on status, see our product life cycle.

(2) **Material type:** When designated, preproduction parts are prototypes/experimental devices, and are not yet approved or released for full production. Testing and final process, including without limitation quality assurance, reliability performance testing, and/or process qualification, may not yet be complete, and this item is subject to further changes or possible discontinuation. If available for ordering, purchases will be subject to an additional waiver at checkout, and are intended for early internal evaluation purposes only. These items are sold without warranties of any kind.

(3) **RoHS values:** Yes, No, RoHS Exempt. See the TI RoHS Statement for additional information and value definition.

(4) **Lead finish/Ball material:** Parts may have multiple material finish options. Finish options are separated by a vertical ruled line. Lead finish/Ball material values may wrap to two lines if the finish value exceeds the maximum column width.

(5) MSL rating/Peak reflow: The moisture sensitivity level ratings and peak solder (reflow) temperatures. In the event that a part has multiple moisture sensitivity ratings, only the lowest level per JEDEC standards is shown. Refer to the shipping label for the actual reflow temperature that will be used to mount the part to the printed circuit board.

(6) Part marking: There may be an additional marking, which relates to the logo, the lot trace code information, or the environmental category of the part.

Multiple part markings will be inside parentheses. Only one part marking contained in parentheses and separated by a "~" will appear on a part. If a line is indented then it is a continuation of the previous line and the two combined represent the entire part marking for that device.

Important Information and Disclaimer: The information provided on this page represents TI's knowledge and belief as of the date that it is provided. TI bases its knowledge and belief on information provided by third parties, and makes no representation or warranty as to the accuracy of such information. Efforts are underway to better integrate information from third parties. TI has taken and continues to take reasonable steps to provide representative and accurate information but may not have conducted destructive testing or chemical analysis on incoming materials and chemicals. TI and TI suppliers consider certain information to be proprietary, and thus CAS numbers and other limited information may not be available for release.

In no event shall TI's liability arising out of such information exceed the total purchase price of the TI part(s) at issue in this document sold by TI to Customer on an annual basis.

OTHER QUALIFIED VERSIONS OF SN74LVC2G06 :

- Automotive : SN74LVC2G06-Q1
- Enhanced Product : SN74LVC2G06-EP

NOTE: Qualified Version Definitions:

- Automotive - Q100 devices qualified for high-reliability automotive applications targeting zero defects
- Enhanced Product - Supports Defense, Aerospace and Medical Applications

TAPE AND REEL INFORMATION

REEL DIMENSIONS

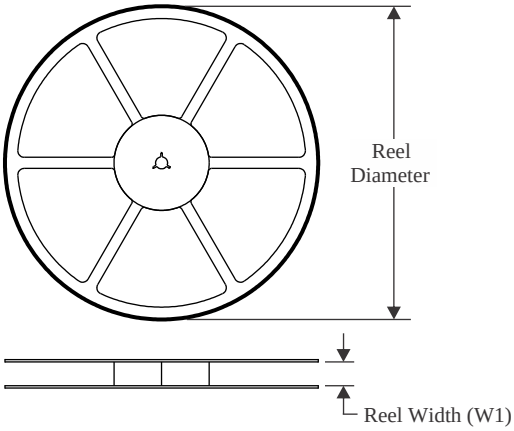

TAPE DIMENSIONS

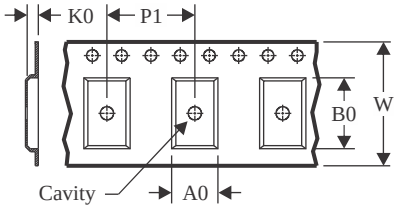

A0	Dimension designed to accommodate the component width
B0	Dimension designed to accommodate the component length
K0	Dimension designed to accommodate the component thickness
W	Overall width of the carrier tape
P1	Pitch between successive cavity centers

QUADRANT ASSIGNMENTS FOR PIN 1 ORIENTATION IN TAPE

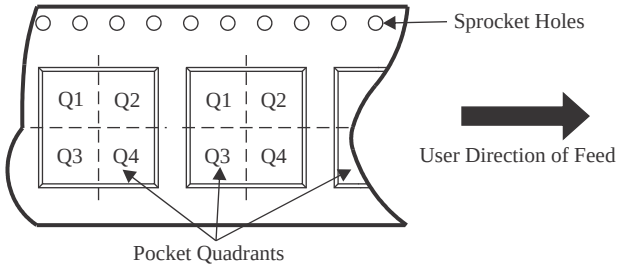

*All dimensions are nominal

Device	Package Type	Package Drawing	Pins	SPQ	Reel Diameter (mm)	Reel Width W1 (mm)	A0 (mm)	B0 (mm)	K0 (mm)	P1 (mm)	W (mm)	Pin1 Quadrant
SN74LVC2G06DBVR	SOT-23	DBV	6	3000	178.0	9.2	3.3	3.23	1.55	4.0	8.0	Q3
SN74LVC2G06DBVR	SOT-23	DBV	6	3000	180.0	8.4	3.23	3.17	1.37	4.0	8.0	Q3
SN74LVC2G06DCKR	SC70	DCK	6	3000	178.0	9.2	2.4	2.4	1.22	4.0	8.0	Q3
SN74LVC2G06DCKR	SC70	DCK	6	3000	180.0	8.4	2.3	2.55	1.2	4.0	8.0	Q3
SN74LVC2G06DCKR	SC70	DCK	6	3000	180.0	8.4	2.41	2.41	1.2	4.0	8.0	Q3
SN74LVC2G06DCKR	SC70	DCK	6	3000	178.0	9.0	2.4	2.5	1.2	4.0	8.0	Q3
SN74LVC2G06DCKR	SC70	DCK	6	3000	178.0	8.4	2.25	2.45	1.2	4.0	8.0	Q3
SN74LVC2G06DCKRG4	SC70	DCK	6	3000	178.0	9.2	2.4	2.4	1.22	4.0	8.0	Q3
SN74LVC2G06DRYR	SON	DRY	6	5000	180.0	9.5	1.15	1.6	0.75	4.0	8.0	Q1
SN74LVC2G06DRYRG4	SON	DRY	6	5000	180.0	9.5	1.15	1.6	0.75	4.0	8.0	Q1
SN74LVC2G06DSFR	SON	DSF	6	5000	180.0	9.5	1.16	1.16	0.5	4.0	8.0	Q2
SN74LVC2G06DSFRG4	SON	DSF	6	5000	180.0	9.5	1.16	1.16	0.5	4.0	8.0	Q2
SN74LVC2G06YZPR	DSBGA	YZP	6	3000	178.0	9.2	1.02	1.52	0.63	4.0	8.0	Q1

TAPE AND REEL BOX DIMENSIONS

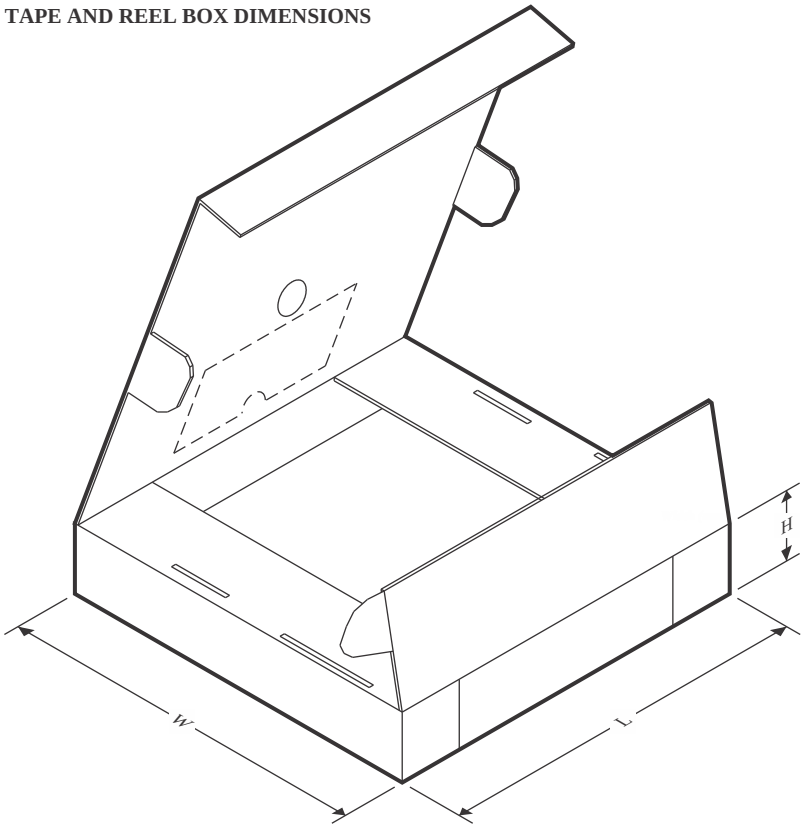

*All dimensions are nominal

Device	Package Type	Package Drawing	Pins	SPQ	Length (mm)	Width (mm)	Height (mm)
SN74LVC2G06DBVR	SOT-23	DBV	6	3000	180.0	180.0	18.0
SN74LVC2G06DBVR	SOT-23	DBV	6	3000	202.0	201.0	28.0
SN74LVC2G06DCKR	SC70	DCK	6	3000	180.0	180.0	18.0
SN74LVC2G06DCKR	SC70	DCK	6	3000	210.0	185.0	35.0
SN74LVC2G06DCKR	SC70	DCK	6	3000	202.0	201.0	28.0
SN74LVC2G06DCKR	SC70	DCK	6	3000	180.0	180.0	18.0
SN74LVC2G06DCKR	SC70	DCK	6	3000	208.0	191.0	35.0
SN74LVC2G06DCKRG4	SC70	DCK	6	3000	180.0	180.0	18.0
SN74LVC2G06DRYR	SON	DRY	6	5000	184.0	184.0	19.0
SN74LVC2G06DRYRG4	SON	DRY	6	5000	184.0	184.0	19.0
SN74LVC2G06DSFR	SON	DSF	6	5000	184.0	184.0	19.0
SN74LVC2G06DSFRG4	SON	DSF	6	5000	184.0	184.0	19.0
SN74LVC2G06YZPR	DSBGA	YZP	6	3000	220.0	220.0	35.0

PACKAGE OUTLINE

DBV0006A

SOT-23 - 1.45 mm max height

SMALL OUTLINE TRANSISTOR

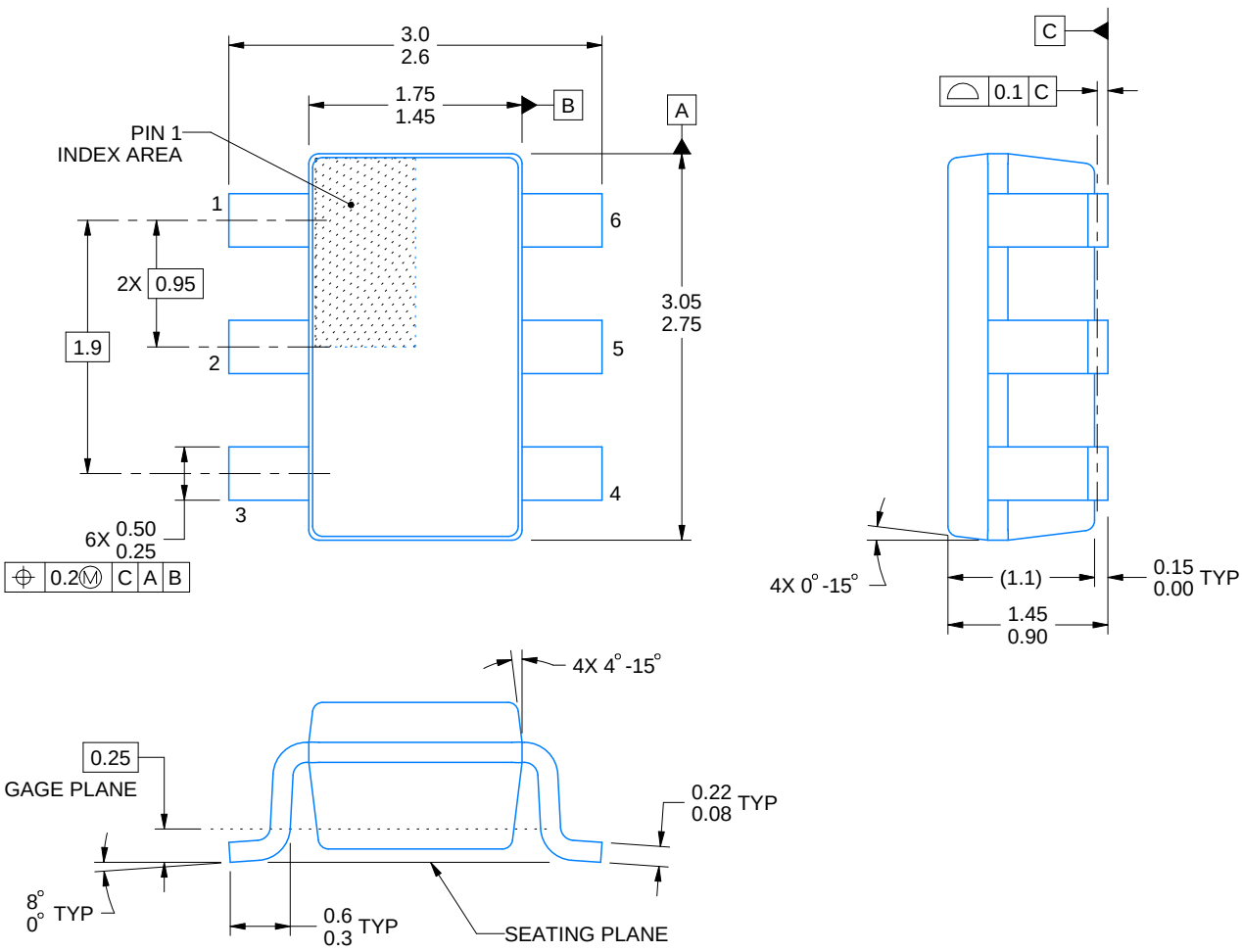

4214840/G 08/2024

NOTES:

1. All linear dimensions are in millimeters. Any dimensions in parenthesis are for reference only. Dimensioning and tolerancing per ASME Y14.5M.
2. This drawing is subject to change without notice.
3. Body dimensions do not include mold flash or protrusion. Mold flash and protrusion shall not exceed 0.25 per side.
4. Leads 1,2,3 may be wider than leads 4,5,6 for package orientation.
5. Refernce JEDEC MO-178.

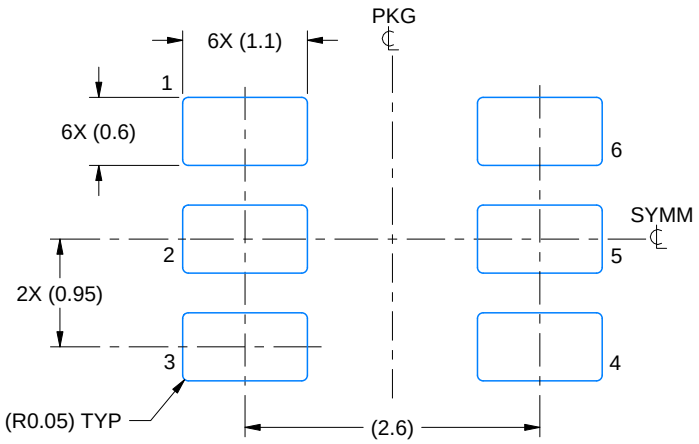

LAND PATTERN EXAMPLE
EXPOSED METAL SHOWN
SCALE:15X

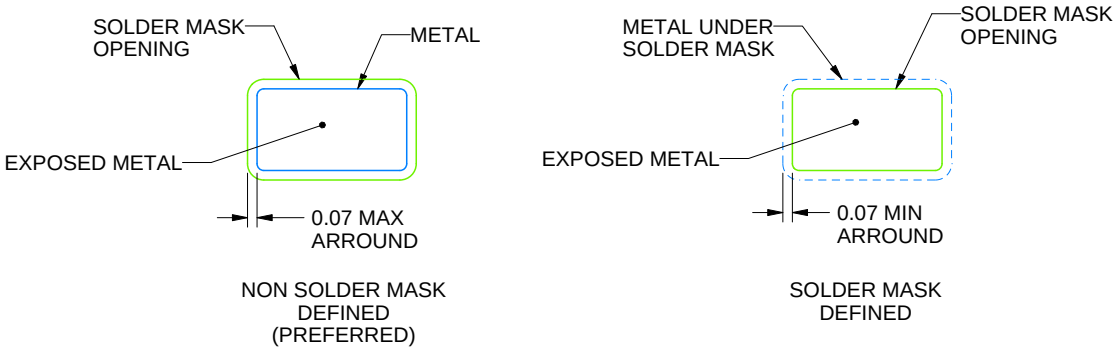

SOLDER MASK DETAILS

4214840/G 08/2024

NOTES: (continued)

6. Publication IPC-7351 may have alternate designs.
7. Solder mask tolerances between and around signal pads can vary based on board fabrication site.

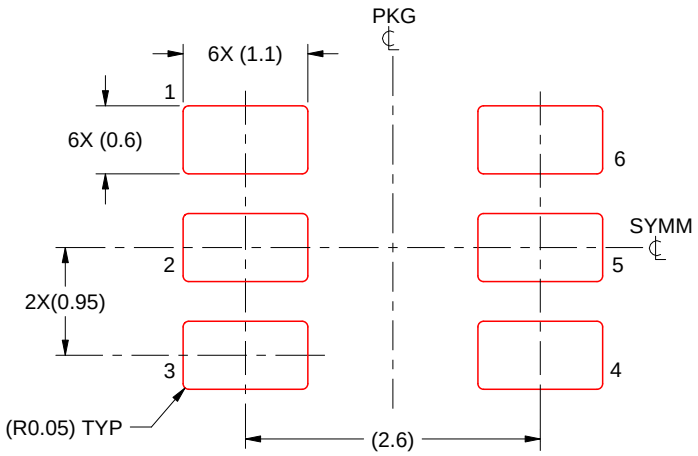

SOLDER PASTE EXAMPLE
BASED ON 0.125 mm THICK STENCIL
SCALE:15X

4214840/G 08/2024

NOTES: (continued)

8. Laser cutting apertures with trapezoidal walls and rounded corners may offer better paste release. IPC-7525 may have alternate design recommendations.
9. Board assembly site may have different recommendations for stencil design.

PACKAGE OUTLINE

YZP0006

DSBGA - 0.5 mm max height

DIE SIZE BALL GRID ARRAY

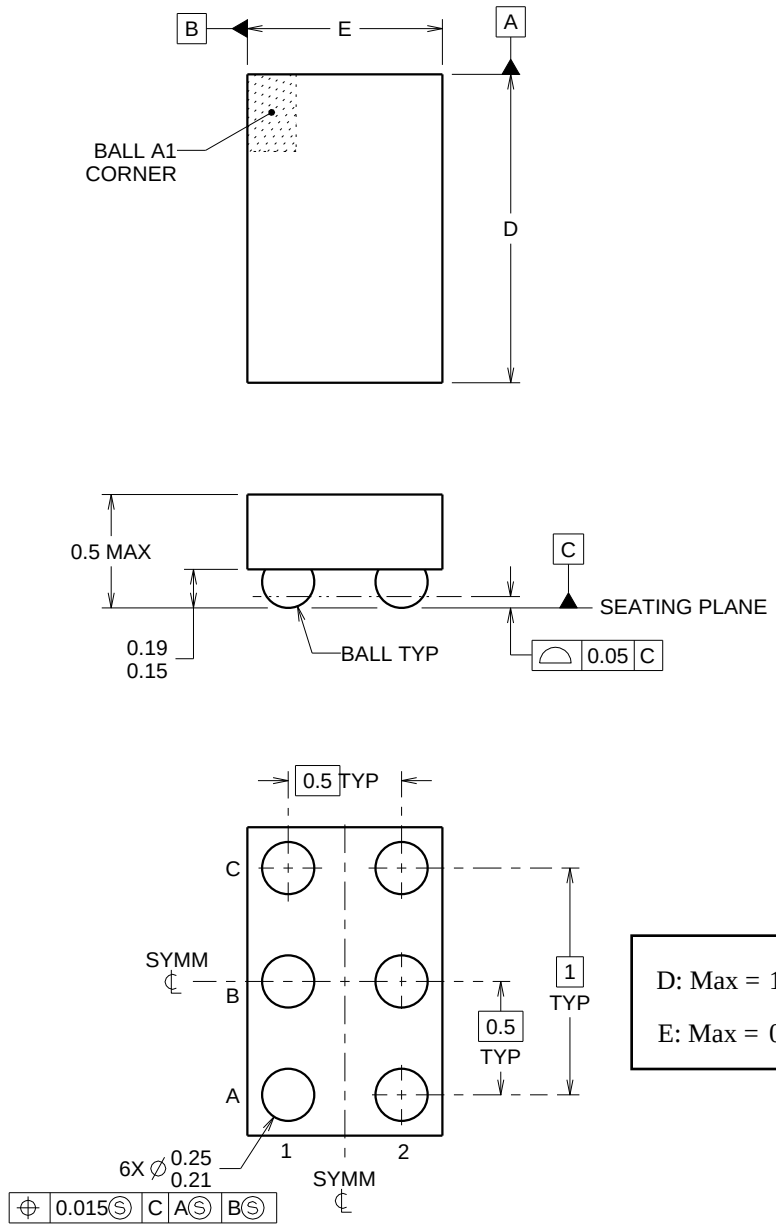

D: Max = 1.418 mm, Min =1.358 mm

E: Max = 0.918 mm, Min =0.858 mm

4219524/A 06/2014

NOTES:

NanoFree Is a trademark of Texas Instruments.

1. All linear dimensions are in millimeters. Any dimensions in parenthesis are for reference only. Dimensioning and tolerancing per ASME Y14.5M.
2. This drawing is subject to change without notice.
3. NanoFree™ package configuration.

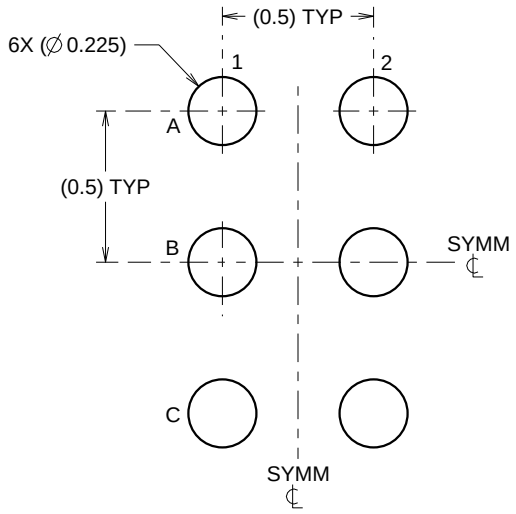

LAND PATTERN EXAMPLE
SCALE:40X

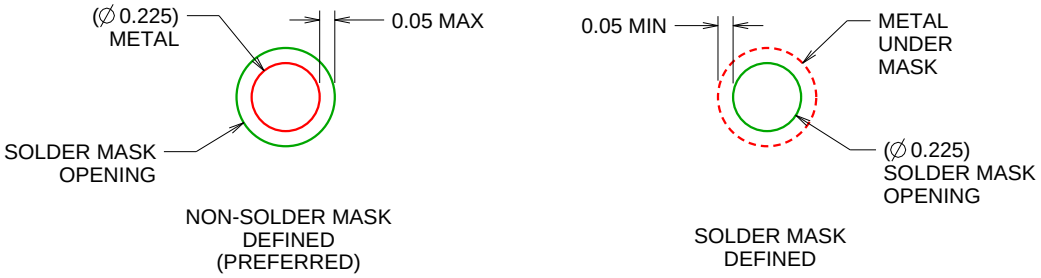

SOLDER MASK DETAILS
NOT TO SCALE

4219524/A 06/2014

NOTES: (continued)

4. Final dimensions may vary due to manufacturing tolerance considerations and also routing constraints. For more information, see Texas Instruments literature number SBVA017 (www.ti.com/lit/sbva017).

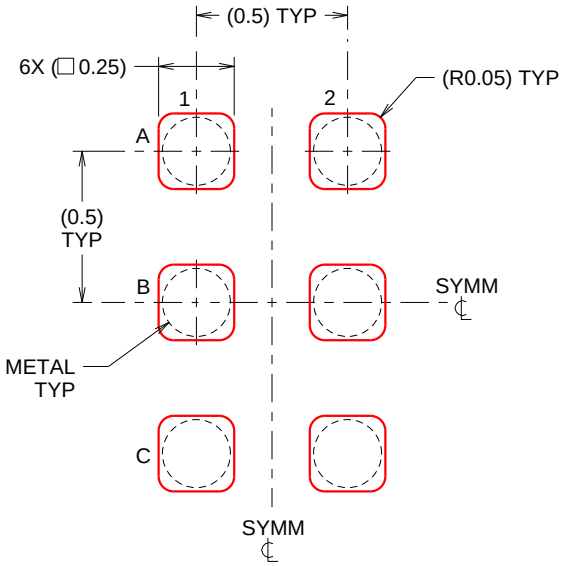

SOLDER PASTE EXAMPLE
BASED ON 0.1 mm THICK STENCIL
SCALE:40X

4219524/A 06/2014

NOTES: (continued)

5. Laser cutting apertures with trapezoidal walls and rounded corners may offer better paste release.

PACKAGE OUTLINE

DCK0006A

SOT - 1.1 max height

SMALL OUTLINE TRANSISTOR

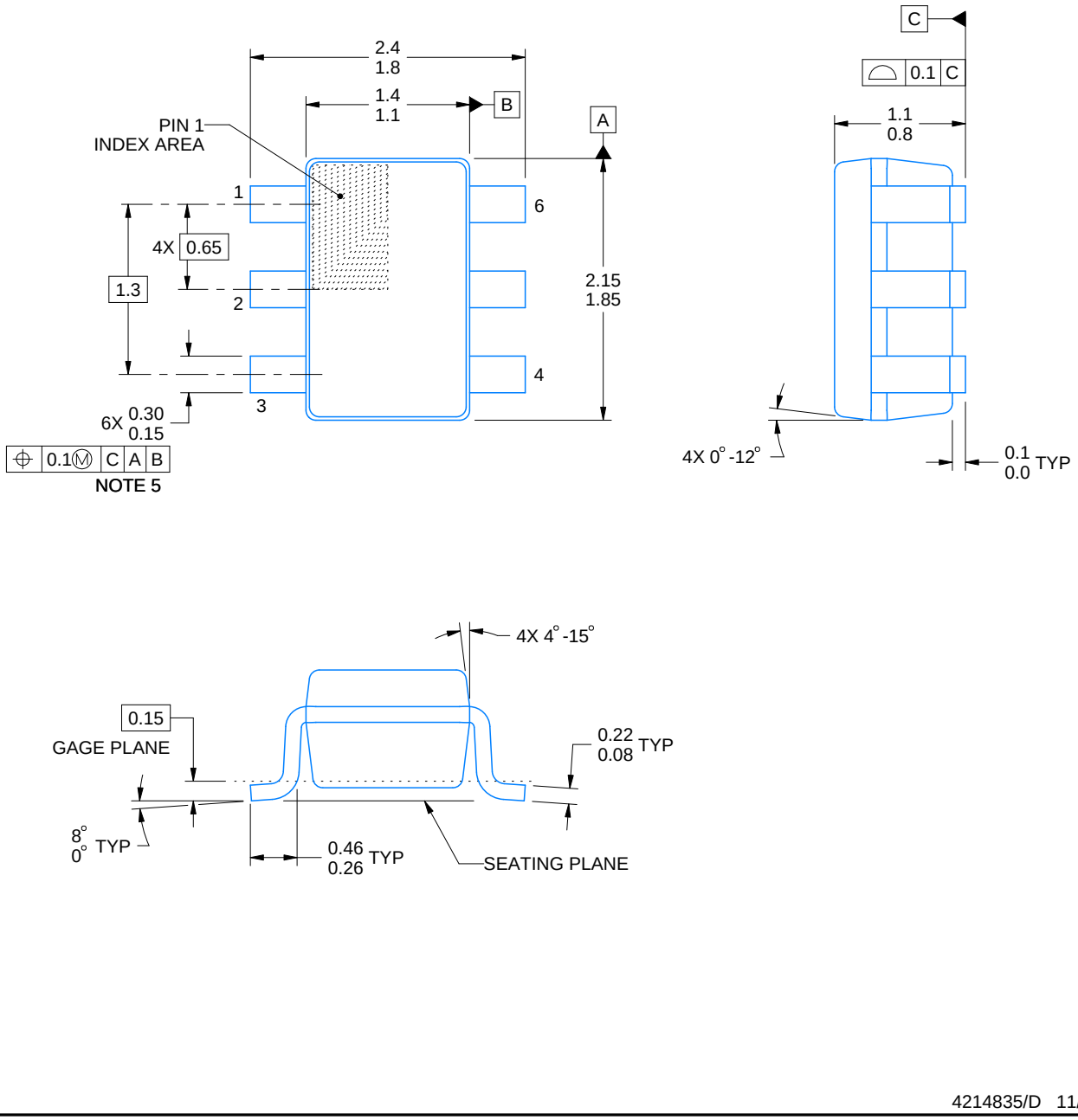

4214835/D 11/2024

NOTES:

1. All linear dimensions are in millimeters. Any dimensions in parenthesis are for reference only. Dimensioning and tolerancing per ASME Y14.5M.
2. This drawing is subject to change without notice.
3. Body dimensions do not include mold flash or protrusion. Mold flash and protrusion shall not exceed 0.15 per side.
4. Falls within JEDEC MO-203 variation AB.

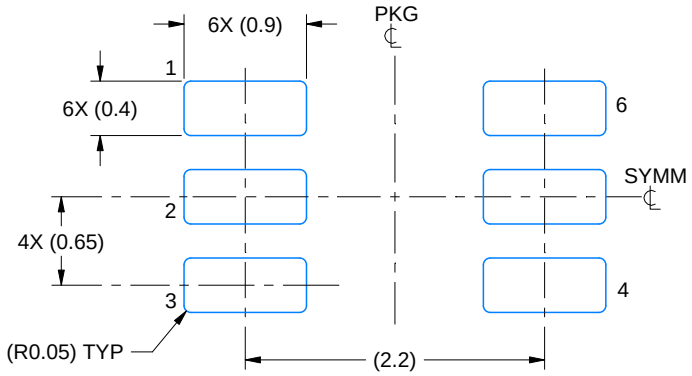

LAND PATTERN EXAMPLE
EXPOSED METAL SHOWN
SCALE:18X

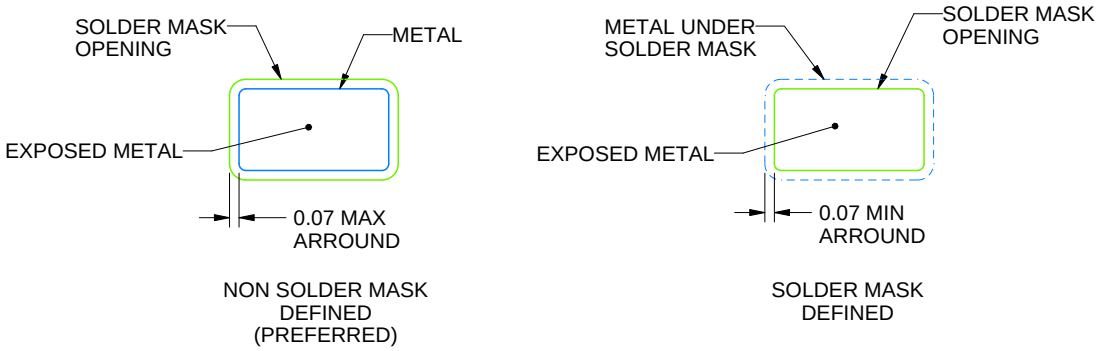

SOLDER MASK DETAILS

4214835/D 11/2024

NOTES: (continued)

5. Publication IPC-7351 may have alternate designs.
6. Solder mask tolerances between and around signal pads can vary based on board fabrication site.

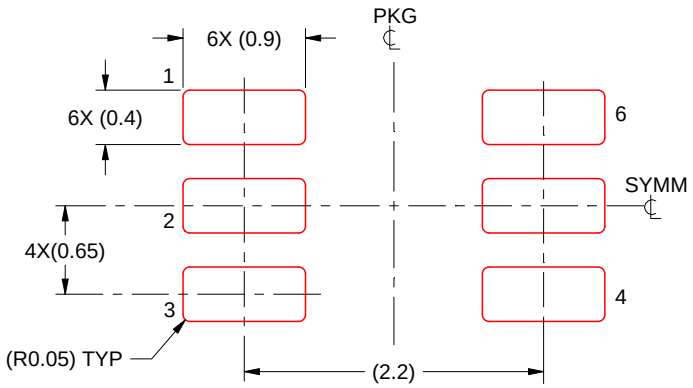

SOLDER PASTE EXAMPLE
BASED ON 0.125 THICK STENCIL
SCALE:18X

4214835/D 11/2024

NOTES: (continued)

7. Laser cutting apertures with trapezoidal walls and rounded corners may offer better paste release. IPC-7525 may have alternate design recommendations.
8. Board assembly site may have different recommendations for stencil design.

DRY 6 USON - 0.6 mm max height

PLASTIC SMALL OUTLINE - NO LEAD



Images above are just a representation of the package family, actual package may vary.
Refer to the product data sheet for package details.

DRY0006A

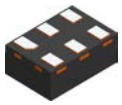

PACKAGE OUTLINE

USON - 0.6 mm max height

PLASTIC SMALL OUTLINE - NO LEAD

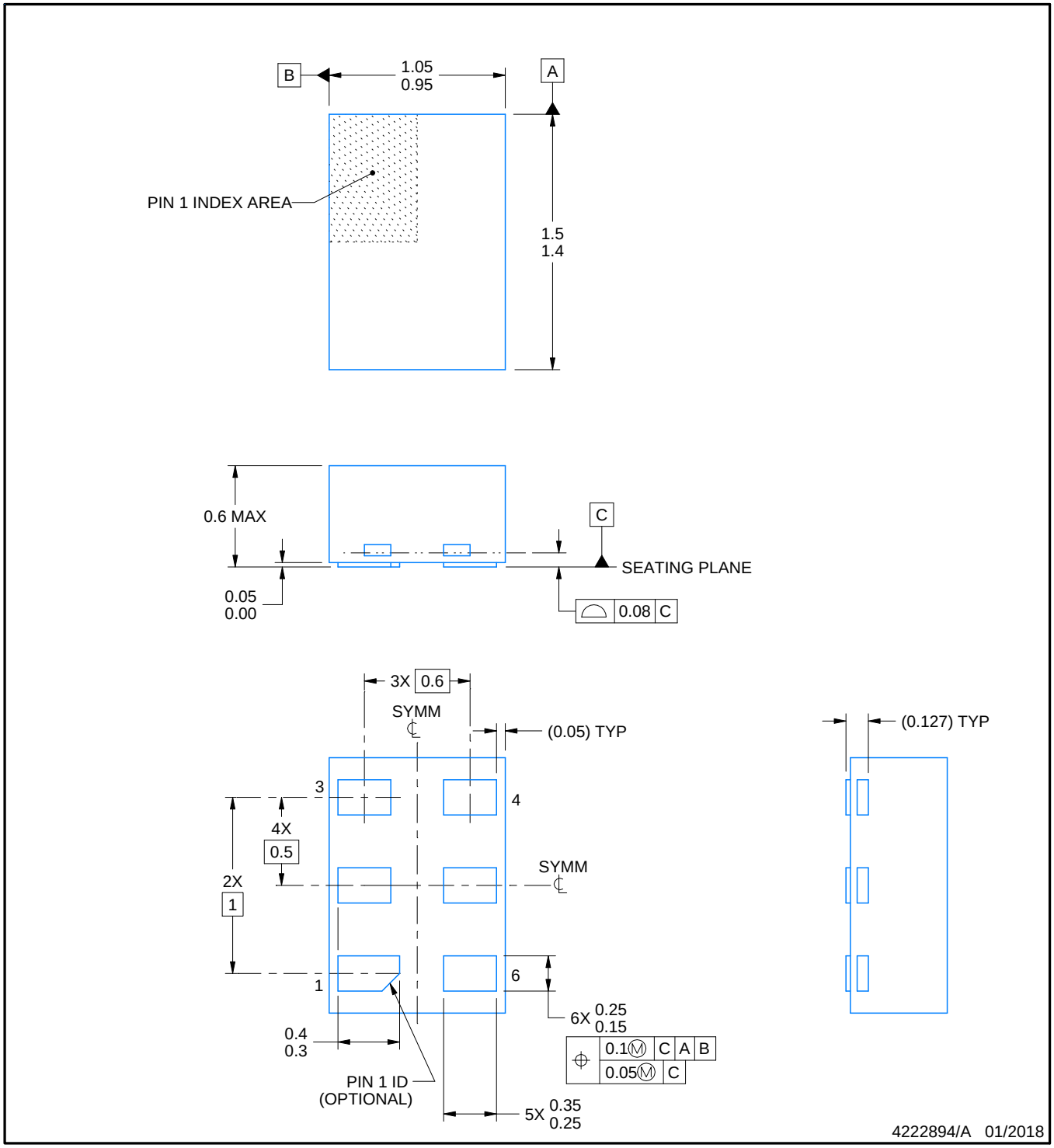

NOTES:

1. All linear dimensions are in millimeters. Any dimensions in parenthesis are for reference only. Dimensioning and tolerancing per ASME Y14.5M.
2. This drawing is subject to change without notice.

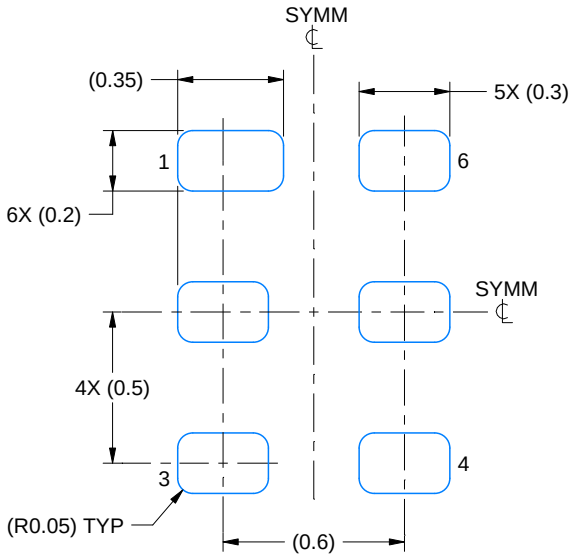

LAND PATTERN EXAMPLE
1:1 RATIO WITH PKG SOLDER PADS
EXPOSED METAL SHOWN
SCALE:40X

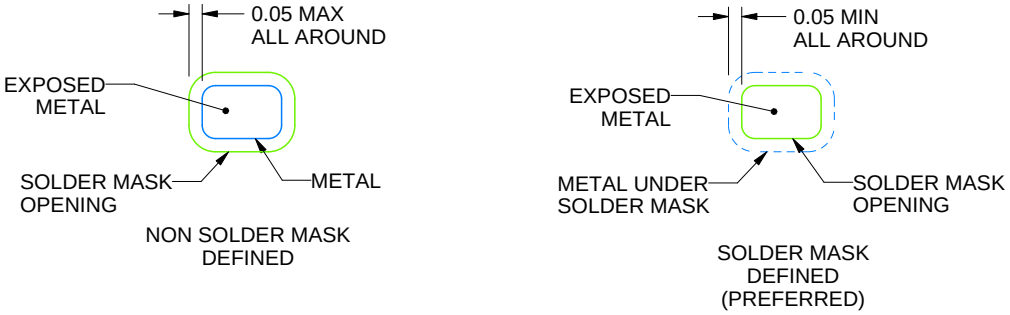

SOLDER MASK DETAILS

4222894/A 01/2018

NOTES: (continued)

3. For more information, see QFN/SON PCB application report in literature No. SLUA271 (www.ti.com/lit/slua271).

EXAMPLE STENCIL DESIGN

DRY0006A

USON - 0.6 mm max height

PLASTIC SMALL OUTLINE - NO LEAD

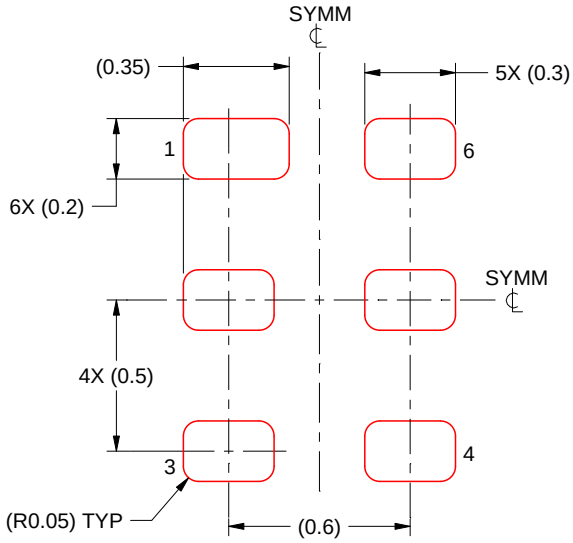

SOLDER PASTE EXAMPLE
BASED ON 0.075 - 0.1 mm THICK STENCIL
SCALE:40X

4222894/A 01/2018

NOTES: (continued)

4. Laser cutting apertures with trapezoidal walls and rounded corners may offer better paste release. IPC-7525 may have alternate design recommendations.

PACKAGE OUTLINE

DSF0006A

X2SON - 0.4 mm max height

PLASTIC SMALL OUTLINE - NO LEAD

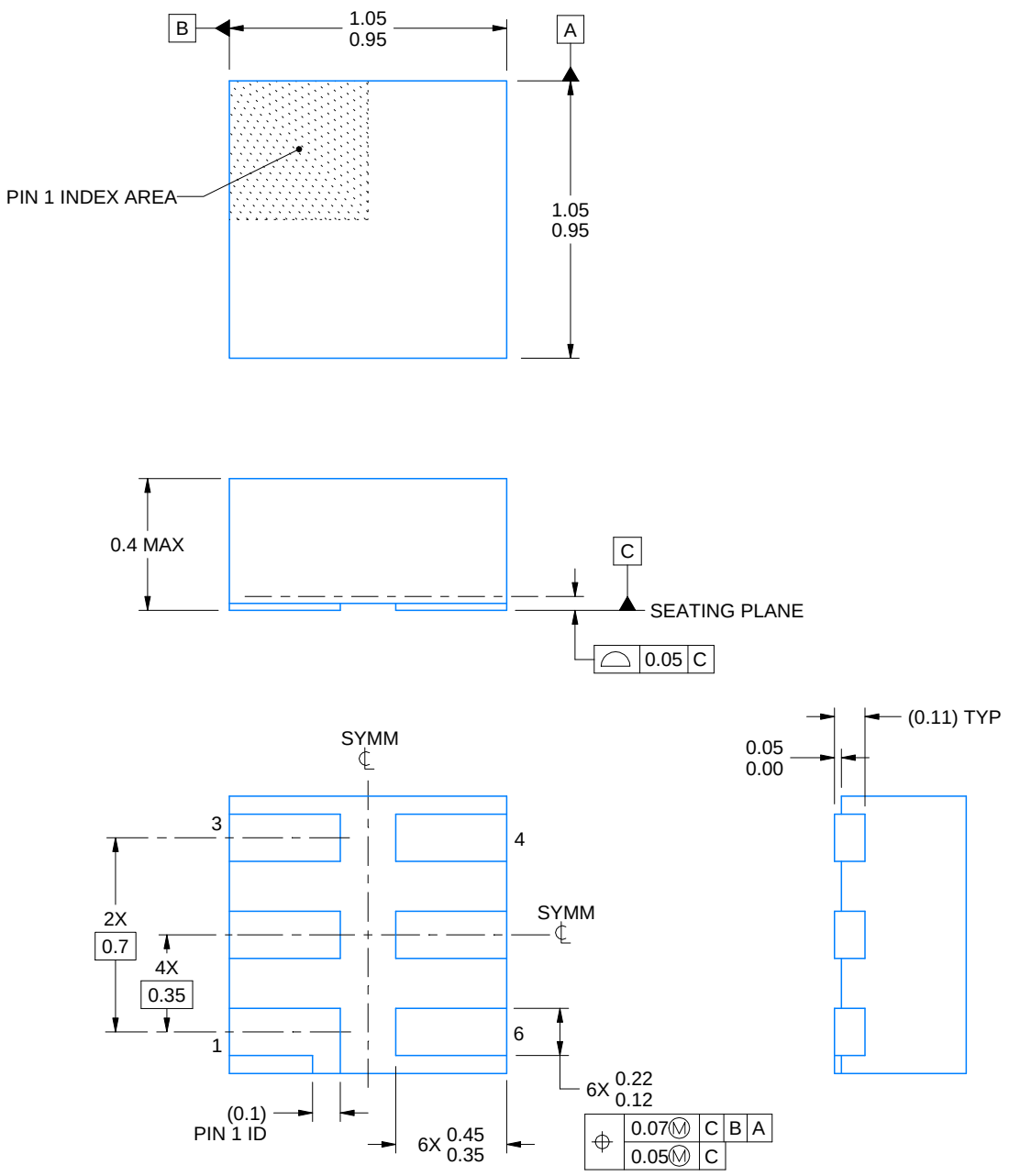

4220597/B 06/2022

NOTES:

1. All linear dimensions are in millimeters. Any dimensions in parenthesis are for reference only. Dimensioning and tolerancing per ASME Y14.5M.
2. This drawing is subject to change without notice.
3. Reference JEDEC registration MO-287, variation X2AAF.

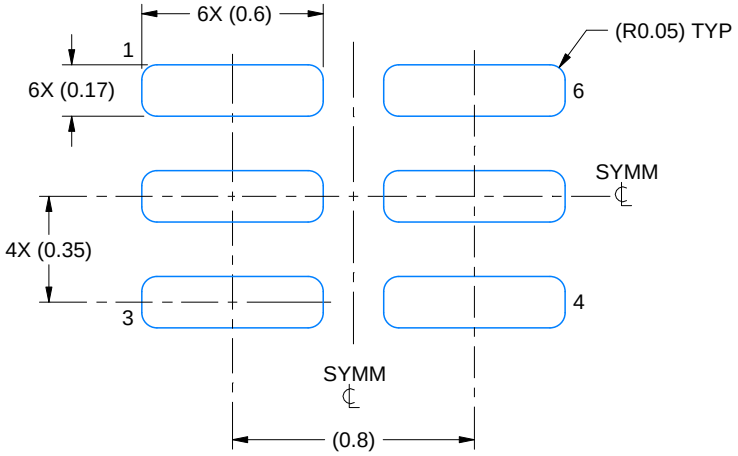

LAND PATTERN EXAMPLE
EXPOSED METAL SHOWN
SCALE:40X

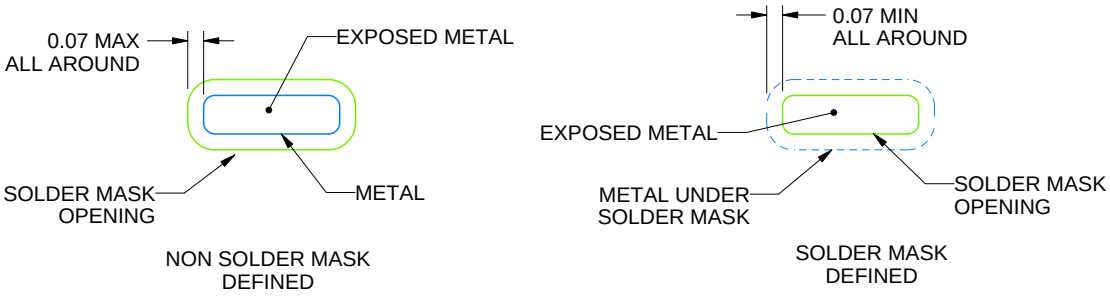

SOLDER MASK DETAILS

4220597/B 06/2022

NOTES: (continued)

4. For more information, see Texas Instruments literature number SLUA271 (www.ti.com/lit/slua271).

EXAMPLE STENCIL DESIGN

DSF0006A

X2SON - 0.4 mm max height

PLASTIC SMALL OUTLINE - NO LEAD

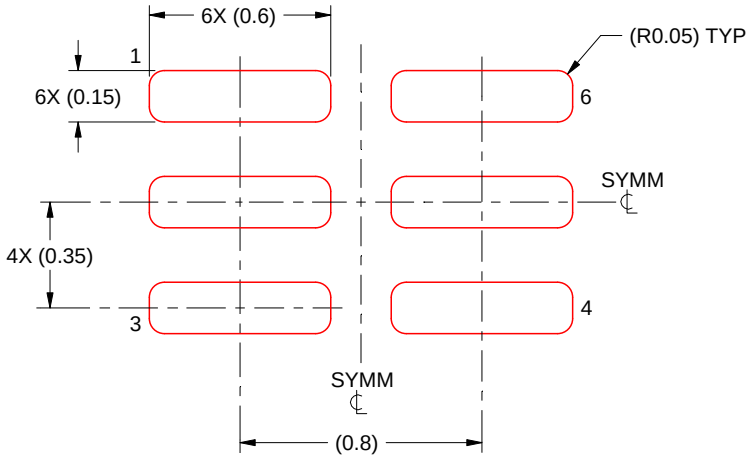

SOLDER PASTE EXAMPLE
BASED ON 0.09 mm THICK STENCIL

PRINTED SOLDER COVERAGE BY AREA UNDER PACKAGE
SCALE:40X

4220597/B 06/2022

4. Laser cutting apertures with trapezoidal walls and rounded corners may offer better paste release. IPC-7525 may have alternate design recommendations.

IMPORTANT NOTICE AND DISCLAIMER

TI PROVIDES TECHNICAL AND RELIABILITY DATA (INCLUDING DATASHEETS), DESIGN RESOURCES (INCLUDING REFERENCE DESIGNS), APPLICATION OR OTHER DESIGN ADVICE, WEB TOOLS, SAFETY INFORMATION, AND OTHER RESOURCES “AS IS” AND WITH ALL FAULTS, AND DISCLAIMS ALL WARRANTIES, EXPRESS AND IMPLIED, INCLUDING WITHOUT LIMITATION ANY IMPLIED WARRANTIES OF MERCHANTABILITY, FITNESS FOR A PARTICULAR PURPOSE OR NON-INFRINGEMENT OF THIRD PARTY INTELLECTUAL PROPERTY RIGHTS.

These resources are intended for skilled developers designing with TI products. You are solely responsible for (1) selecting the appropriate TI products for your application, (2) designing, validating and testing your application, and (3) ensuring your application meets applicable standards, and any other safety, security, regulatory or other requirements.

These resources are subject to change without notice. TI grants you permission to use these resources only for development of an application that uses the TI products described in the resource. Other reproduction and display of these resources is prohibited. No license is granted to any other TI intellectual property right or to any third party intellectual property right. TI disclaims responsibility for, and you fully indemnify TI and its representatives against any claims, damages, costs, losses, and liabilities arising out of your use of these resources.

TI’s products are provided subject to TI’s Terms of Sale, TI’s General Quality Guidelines, or other applicable terms available either on ti.com or provided in conjunction with such TI products. TI’s provision of these resources does not expand or otherwise alter TI’s applicable warranties or warranty disclaimers for TI products. Unless TI explicitly designates a product as custom or customer-specified, TI products are standard, catalog, general purpose devices.

TI objects to and rejects any additional or different terms you may propose.

Copyright © 2026, Texas Instruments Incorporated

Last updated 10/2025