TAS2505 2.6W Digital/Analog Input Class-D Speaker Amplifier With Audio Processing

1 Features

- Mono class-D BTL speaker amplifier
  - 2.6W at 10% THD_N (4Ω, 5.5V)
  - 1.7W at 10% THD+N (8Ω, 5.5V)
- Supports both digital and analog input
- Single supply 2.7V to 5.5V
- Load diagnostic functions:
  - Output-to-GND Short
  - Terminal-to-terminal short
  - Output-to-power short
  - Over temperature
  - Input DC
- Supports 9kHz to 96kHz sample rates
- Two single-ended inputs with output mixing and level control
- Embedded power-on-reset
- Programmable digital audio processing:
  - Bass boost
  - Treble
  - EQ (up to 6 biquads)
- I^2S, Left-justified, right-justified, DSP, and TDM audio interfaces
- I^2C and SPI Control With Auto-Increment
- 24-Pin, VQFN package

2 Applications

- Instrument Cluster
- Automotive Emergency Call (eCall)
- Telematics

3 Description

The TAS2505 is a mono Class-D speaker amp that supports both Digital and Analog inputs. The device is designed for automotive instrument cluster, emergency call (eCall), and telematics applications. Direct I^2S input removes the need for an external DAC in the audio signal path. In addition to integration, the device features programmable audio processing. The onboard DSP supports bass boost, treble, and EQ (up to 6 biquads). An on-chip PLL provides the high-speed clock needed by the DSP. The volume level is register controlled.

Device Information (1)

PART NUMBER	PACKAGE	PACKAGE SIZE (2)
TAS2505	VQFN (24)	4.00mm × 4.00mm
TAS2505A-Q1	VQFN (24)	4.00mm × 4.00mm

(1) For all available packages, see the orderable addendum at the end of the data sheet.
(2) The package size (length × width) is a nominal value and includes pins, where applicable.

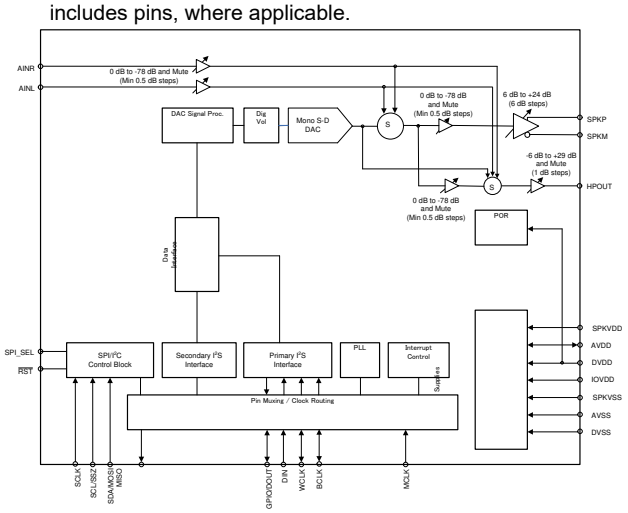

Simplified Block Diagram

An IMPORTANT NOTICE at the end of this data sheet addresses availability, warranty, changes, use in safety-critical applications, intellectual property matters and other important disclaimers. PRODUCTION DATA.

Table of Contents

1 Features....1
2 Applications....1
3 Description....1
4 Pin Configuration and Functions....3
5 Specifications....4
5.1 Absolute Maximum Ratings....4
5.2 ESD Ratings....4
5.3 Recommended Operating Conditions....4
5.4 Thermal Information....4
5.5 Electrical Characteristics....5
5.6 I^2S/LJF/RJF Timing in Master Mode....6
5.7 I^2S/LJF/RJF Timing in Slave Mode....7
5.8 DSP Timing in Master Mode....7
5.9 DSP Timing in Slave Mode....7
5.10 I^2C Interface Timing....8
5.11 SPI Interface Timing....8
5.12 Typical Characteristics....11
6 Parameter Measurement Information....13
7 Detailed Description....14
7.1 Overview....14
7.2 Functional Block Diagram....14
7.3 Feature Description....14
7.4 Device Functional Modes....15
8 Register Map....19
9 Application and Implementation....22
9.1 Application Information....22
9.2 Typical Applications....22
9.3 Power Supply Recommendations....24
9.4 Layout....24
10 Device and Documentation Support....26
10.1 Third-Party Products Disclaimer....26
10.2 Documentation Support....26
10.3 Receiving Notification of Documentation Updates....26
10.4 Support Resources....26
10.5 Trademarks....26
10.6 Electrostatic Discharge Caution....26
10.7 Glossary....26
10.8 Community Resources....26
11 Revision History....26
12 Mechanical, Packaging, and Orderable Information....27

Copyright © 2025 Texas Instruments Incorporated

4 Pin Configuration and Functions

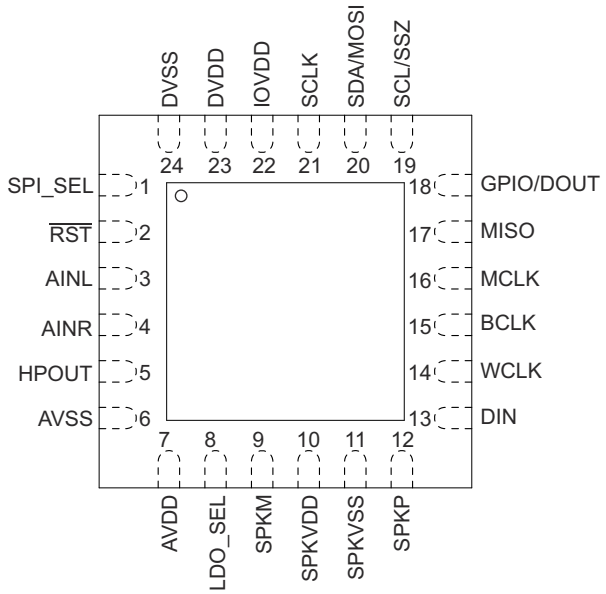

Figure 4-1. RGE Package 24-Pin VQFN Top View

Table 4-1. Pin Functions

PIN		TYPE[(1)]	DESCRIPTION
NO.	NAME		
1	SPI_SEL	I	Selects between SPI and I^{2}C digital interface modes; (1 = SPI mode) (0 = I^{2}C mode)
2	$\overline{\text{RST}}$	I	Reset for logic, state machines, and digital filters; asserted LOW.
3	AINL	I	Analog single-ended line left input
4	AINR	I	Analog single-ended line right input
5	NC	O	No Connect (Leave unconnected)
6	AVSS	GND	Analog Ground, 0V
7	AVDD	PWR	Analog Core Supply Voltage, 1.5V to 1.95V
8	LDO_SEL	I	Connect to ground.
9	SPKM	O	Class-D speaker driver inverting output
10	SPKVDD	PWR	Class-D speaker driver power supply
11	SPKVSS	PWR	Class-D speaker driver power supply ground supply
12	SPKP	O	Class-D speaker driver noninverting output
13	DIN	I	Audio Serial Data Bus Input Data
14	WCLK	I/O	Audio Serial Data Bus Word Clock
15	BCLK	I/O	Audio Serial Data Bus Bit Clock
16	MCLK	I	Master CLK Input / Reference CLK for CLK Multiplier - PLL (On startup PLLCLK = CLKIN)
17	MISO	O	SPI Serial Data Output
18	GPIO/DOUT	I/O/Z	GPIO / Audio Serial Bus Output
19	SCL/SSZ	I	Either I^{2}C Input Serial Clock or SPI Chip Select Signal depending on SPI_SEL state
20	SDA/MOSI	I	Either I^{2}C Serial Data Input or SPI Serial Data Input depending on SPI_SEL state.
21	SCLK	I	Serial clock for SPI interface
22	IOVDD	PWR	I/O Power Supply, 1.1V to 3.6V
23	DVDD	PWR	Digital Power Supply, 1.65V to 1.95V
24	DVSS	GND	Digital Ground, 0V

(1) I = Input, O = Output, GND = Ground, PWR = Power, Z = High Impedance

Copyright © 2025 Texas Instruments Incorporated

5 Specifications

5.1 Absolute Maximum Ratings

over operating free-air temperature range (unless otherwise noted) [1]

	MIN	MAX	UNIT
AVDD to AVSS	–0.3	2.2	V
DVDD to DVSS	–0.3	2.2	V
SPKVDD to SPKVSS	–0.3	6	V
IOVDD to IOVSS	–0.3	3.9	V
Digital input voltage	IOVSS – 0.3	IOVDD + 0.3	V
Analog input voltage	AVSS – 0.3	AVDD + 0.3	V
Operating temperature	–40	85	°C
Junction temperature, T_J Max		105	°C
Power dissipation for VQFN package (with thermal pad soldered to board)	(T_J Max – T_A) / θ_{JA}		W
Storage temperature, T_{stg}	–55	150	°C

(1) Stresses beyond those listed under *Absolute Maximum Ratings* may cause permanent damage to the device. These are stress ratings only, and functional operation of the device at these or any other conditions beyond those indicated under *Recommended Operating Conditions* is not implied. Exposure to absolute-maximum-rated conditions for extended periods may affect device reliability.

5.2 ESD Ratings

			VALUE	UNIT
$V_{(ESD)}$	Electrostatic discharge	Human-body model (HBM), per ANSI/ESDA/JEDEC JS-001[1]	±500	V
		Charged-device model (CDM), per JEDEC specification JESD22-C101[2]	±250	

(1) JEDEC document JEP155 states that 500-V HBM allows safe manufacturing with a standard ESD control process.
(2) JEDEC document JEP157 states that 250-V CDM allows safe manufacturing with a standard ESD control process.

5.3 Recommended Operating Conditions

over operating free-air temperature range (unless otherwise noted)

			MIN	NOM	MAX	UNIT
AVDD[2]	Power-supply voltage	Referenced to AVSS[1]	1.5	1.8	1.95	V
DVDD		Referenced to DVSS [1]	1.65	1.8	1.95	
SPKVDD[2]		Referenced to SPKVSS [1]	2.7		5.5	
IOVDD		Referenced to IOVSS [1]	1.1	1.8	3.6	
	Speaker impedance	Load applied across class-D output pins (BTL)	4			Ω
V_I	Analog audio full-scale input voltage	AVDD = 1.8V, single-ended		0.5		V_{RMS}
MCLK[3]	Master clock frequency	IOVDD = DVDD = 1.8V			50	MHz
SCL	SCL clock frequency				400	kHz
T_A	Operating free-air temperature		–40		85	°C

(1) All grounds on board are tied together, so they should not differ in voltage by more than 0.2 V maximum for any combination of ground signals. By use of a wide trace or ground plane, ensure a low-impedance connection between AVSS and DVSS.
(2) To minimize battery-current leakage, the SPKVDD voltage level should not be below the AVDD voltage level.
(3) The maximum input frequency should be 50 MHz for any digital pin used as a general-purpose clock.

5.4 Thermal Information

THERMAL METRIC[1]		TAS2505 RGE (QFN) 24 PINS	UNIT
θ_{JA}	Junction-to-ambient thermal resistance	32.2	°C/W
θ_{JCtop}	Junction-to-case (top) thermal resistance	30	°C/W

Copyright © 2025 Texas Instruments Incorporated

THERMAL METRIC[1]		TAS2505 RGE (QFN) 24 PINS	UNIT
θ_{JB}	Junction-to-board thermal resistance	9.2	°C/W
ψ_{JT}	Junction-to-top characterization parameter	0.3	°C/W
ψ_{JB}	Junction-to-board characterization parameter	9.2	°C/W
θ_{JCbot}	Junction-to-case (bottom) thermal resistance	2.2	°C/W

(1) For more information about traditional and new thermal metrics, see the *Semiconductor and IC Package Thermal Metrics* application report.

5.5 Electrical Characteristics

At 25°C, AVDD = 1.8V, IOVDD = 1.8V, SPKVDD = 3.6V, DVDD = 1.8V, f_S (audio) = 48kHz, CODEC_CLKIN = 256 × f_S, PLL = Off

PARAMETER		TEST CONDITIONS	MIN	TYP	MAX	UNIT
INTERNAL OSCILLATOR—RC_CLK						
	Oscillator frequency			8.48		MHz
DAC DIGITAL INTERPOLATION FILTER CHARACTERISTICS						
See *TAS2505 Application Reference Guide* (SLAU472) for DAC interpolation filter characteristics.						
DAC OUTPUT TO CLASS-D SPEAKER OUTPUT; LOAD = 4Ω (DIFFERENTIAL)						
ICN	Idle channel noise	BTL measurement, class-D gain = 6dB, Measured as idle-channel noise, A-weighted[2] [1]		37		µVms
	Output voltage	BTL measurement, class-D gain = 6dB, –3dBFS input		1.4		Vrms
THD+N	Total harmonic distortion + noise	BTL measurement, DAC input = –6dBFS, class-D gain = 6dB		–73.9		dB
PSRR	Power-supply rejection ratio	BTL measurement, ripple on SPKVDD = 200mV_{PP} at 1kHz		55		dB
	Mute attenuation	Mute		103		dB
P_O	Maximum output power	SPKVDD = 3.6V, BTL measurement, CM = 0.9V, class-D gain = 18dB, THD = 10%		1.1		W
		SPKVDD = 4.2V, BTL measurement, CM = 0.9V, class-D gain = 18dB, THD = 10%		1.4		
		SPKVDD = 3.6V, BTL measurement, CM = 0.9V, class-D gain = 18dB, THD = 1%		0.8		
		SPKVDD = 4.2V, BTL measurement, CM = 0.9V, class-D gain = 18dB, THD = 1%		1.1		
		SPKVDD = 5.5V, BTL measurement, CM = 0.9V, class-D gain = 18dB			2	
DAC OUTPUT TO CLASS-D SPEAKER OUTPUT; LOAD = 8Ω (DIFFERENTIAL)						
ICN	Idle channel noise	BTL measurement, class-D gain = 6dB, measured as idle-channel noise, A-weighted[2] [1]		35.2		µVms
	Output voltage	BTL measurement, class-D gain = 6dB, –3dBFS input		1.4		Vrms
THD+N	Total harmonic distortion + noise	BTL measurement, DAC input = –6dBFS, class-D gain = 6dB		–73.6		dB

At 25°C, AVDD = 1.8V, IOVDD = 1.8V, SPKVDD = 3.6V, DVDD = 1.8V, f_S (audio) = 48kHz, CODEC_CLKIN = 256 × f_S, PLL = Off

PARAMETER		TEST CONDITIONS	MIN	TYP	MAX	UNIT
P_O	Maximum output power	SPKVDD = 3.6V, BTL measurement, CM = 0.9V, class-D gain = 18dB, THD = 10%		0.7		W
		SPKVDD = 4.2V, BTL measurement, CM = 0.9V, class-D gain = 18dB, THD = 10%		1		
		SPKVDD = 5.5V, BTL measurement, CM = 0.9V, class-D gain = 18dB, THD = 10%		1.7		
		SPKVDD = 3.6V, BTL measurement, CM = 0.9V, class-D gain = 18dB, THD = 1%		0.5		
		SPKVDD = 4.2V, BTL measurement, CM = 0.9V, class-D gain = 18dB, THD = 1%		0.8		
		SPKVDD = 5.5V, BTL measurement, CM = 0.9V, class-D gain = 18dB, THD = 1%		1.3		
ANALOG BYPASS TO CLASS-D SPEAKER AMPLIFIER						
	Device setup	BTL measurement, driver gain = 6dB, load = 4Ω (differential), 50pF, input signal frequency fi = 1KHz				
	Voltage gain	Input common-mode = 0.9V		4		V/V
	Gain error	–1dBFS (446mVrms), 1kHz input signal		±0.7		dB
ICN	Idle channel noise	Idle channel, IN1L and IN1R ac-shorted to ground, measured as idle-channel noise, A-weighted(2) (1)		32.6		µVms
THD+N	Total harmonic distortion + noise	–1dBFS (446mVrms), 1kHz input signal		–73.7		dB
SHUTDOWN POWER CONSUMPTION						
	Device setup	Power down POR, /RST held low, AVDD = 1.8V, IOVDD = 1.8V, SPKVDD = 4.2V, DVDD = 1.8V				
	I(AVDD)			1.32		µA
	I(DVDD)			0.04		µA
	I(IOVDD)			0.68		µA
	I(SPKVDD)			2.24		µA
DIGITAL INPUT/OUTPUT						
Logic family				CMOS		
V_{IH}	Logic level	I_{IH} = 5µA, IOVDD ≥ 1.6V	0.7 × IOVDD			V
		I_{IH} = 5µA, IOVDD < 1.6V	IOVDD			
V_{IL}		I_{IL} = 5µA, IOVDD ≥ 1.6V	–0.3		0.3 × IOVDD	V
		I_{IL} = 5µA, IOVDD < 1.6V			0	
V_{OH}		I_{OH} = 2 TTL loads	0.8 × IOVDD			V
V_{OL}		I_{OL} = 2 TTL loads			0.25	V
	Capacitive load			10		pF

(1) All performance measurements were done with a 20kHz low-pass filter and, where noted, an A-weighted filter. Failure to use such a filter may result in higher THD+N and lower SNR and dynamic range readings than shown in the Electrical Characteristics. The low-pass filter removes out-of-band noise, which, although not audible, may affect dynamic specification values.
(2) Ratio of output level with 1kHz full-scale sine-wave input, to the output level with the inputs short-circuited, measured A-weighted over a 20Hz to 20kHz bandwidth using an audio analyzer.

5.6 I²S/LJF/RJF Timing in Master Mode

All specifications at 25°C, DVDD = 1.8V(1)

PARAMETER		IOVDD = 1.8V		IOVDD = 3.3V		UNIT
		MIN	MAX	MIN	MAX	
t_d(WS)	WCLK delay		45		45	ns

Copyright © 2025 Texas Instruments Incorporated

All specifications at 25°C, DVDD = 1.8V[(1)]

PARAMETER		IOVDD = 1.8V		IOVDD = 3.3V		UNIT
		MIN	MAX	MIN	MAX	
t_s(DI)	DIN setup	8		6		ns
t_h(DI)	DIN hold	8		6		ns
t_r	Rise time		25		10	ns
t_f	Fall time		25		10	ns

(1) ll timing specifications are measured at characterization but not tested at final test.

5.7 I²S/LJF/RJF Timing in Slave Mode

All specifications at 25°C, DVDD = 1.8V[(1)]

PARAMETER		IOVDD = 1.8V		IOVDD = 3.3V		UNIT
		MIN	MAX	MIN	MAX	
t_H(BCLK)	BCLK high period	35		35		ns
t_L(BCLK)	BCLK low period	35		35		ns
t_s(WS)	WCLK setup	8		6		ns
t_h(WS)	WCLK hold	8		6		ns
t_s(DI)	DIN setup	8		6		ns
t_h(DI)	DIN hold	8		6		ns
t_r	Rise time		4		4	ns
t_f	Fall time		4		4	ns

(1) All timing specifications are measured at characterization but not tested at final test.

5.8 DSP Timing in Master Mode

All specifications at 25°C, DVDD = 1.8V[(1)]

PARAMETER		IOVDD = 1.8V		IOVDD = 3.3V		UNIT
		MIN	MAX	MIN	MAX	
t_d(WS)	WCLK delay		45		45	ns
t_s(DI)	DIN setup	8		6		ns
t_h(DI)	DIN hold	8		6		ns
t_r	Rise time		25		10	ns
t_f	Fall time		25		10	ns

(1) All timing specifications are measured at characterization but not tested at final test.

5.9 DSP Timing in Slave Mode

All specifications at 25°C, DVDD = 1.8V[(1)]

PARAMETER		IOVDD = 1.8V		IOVDD = 3.3V		UNIT
		MIN	MAX	MIN	MAX	
t_H(BCLK)	BCLK high period	35		35		ns
t_L(BCLK)	BCLK low period	35		35		ns
t_s(WS)	WCLK setup	8		8		ns
t_h(WS)	WCLK hold	8		8		ns
t_s(DI)	DIN setup	8		8		ns
t_h(DI)	DIN hold	8		8		ns
t_r	Rise time		4		4	ns
t_f	Fall time		4		4	ns

(1) All timing specifications are measured at characterization but not tested at final test.

Copyright © 2025 Texas Instruments Incorporated

5.10 I²C Interface Timing

All specifications at 25°C, DVDD = 1.8V[(1)]

PARAMETER		STANDARD MODE			FAST MODE			UNIT
		MIN	TYP	MAX	MIN	TYP	MAX	
f_{SCL}	SCL clock frequency	0		100	0		400	kHz
$t_{HD;STA}$	Hold time (repeated) START condition. After this period, the first clock pulse is generated.	4			0.8			µs
t_{LOW}	LOW period of the SCL clock	4.7			1.3			µs
t_{HIGH}	HIGH period of the SCL clock	4			0.6			µs
$t_{SU;STA}$	Setup time for a repeated START condition	4.7			0.8			µs
$t_{HD;DAT}$	Data hold time for I²C bus devices	0		3.45	0		0.9	µs
$t_{SU;DAT}$	Data setup time	250			100			ns
t_r	SDA and SCL rise time			1000	20 + 0.1 C_b		300	ns
t_f	SDA and SCL fall time			300	20 + 0.1 C_b		300	ns
$t_{SU;STO}$	Set-up time for STOP condition	4			0.8			µs
t_{BUF}	Bus free time between a STOP and START condition	4.7			1.3			µs
C_b	Capacitive load for each bus line			400			400	pF

(1) All timing specifications are measured at characterization but not tested at final test.

5.11 SPI Interface Timing

At 25°C, DVDD = 1.8V

PARAMETER		TEST CONDITION	IOVDD=1.8V			IOVDD=3.3V			UNIT
			MIN	TYP	MAX	MIN	TYP	MAX	
t_{sck}	SCLK period [(1)]		100			50			ns
t_{sckh}	SCLK pulse width High		50			25			ns
t_{sckl}	SCLK pulse width Low		50			25			ns
t_{lead}	Enable lead time		30			20			ns
t_{lag}	Enable lag time		30			20			ns
t_d	Sequential transfer delay		40			20			ns
t_a	Slave DOUT access time				40			40	ns
t_{dis}	Slave DOUT disable time				40			40	ns
t_{su}	DIN data setup time		15			15			ns
t_{hi}	DIN data hold time		15			10			ns
$t_{v;DOUT}$	DOUT data valid time				25			18	ns
t_r	SCLK rise time				4			4	ns
t_f	SCLK fall time				4			4	ns

(1) These parameters are based on characterization and are not tested in production.

Copyright © 2025 Texas Instruments Incorporated

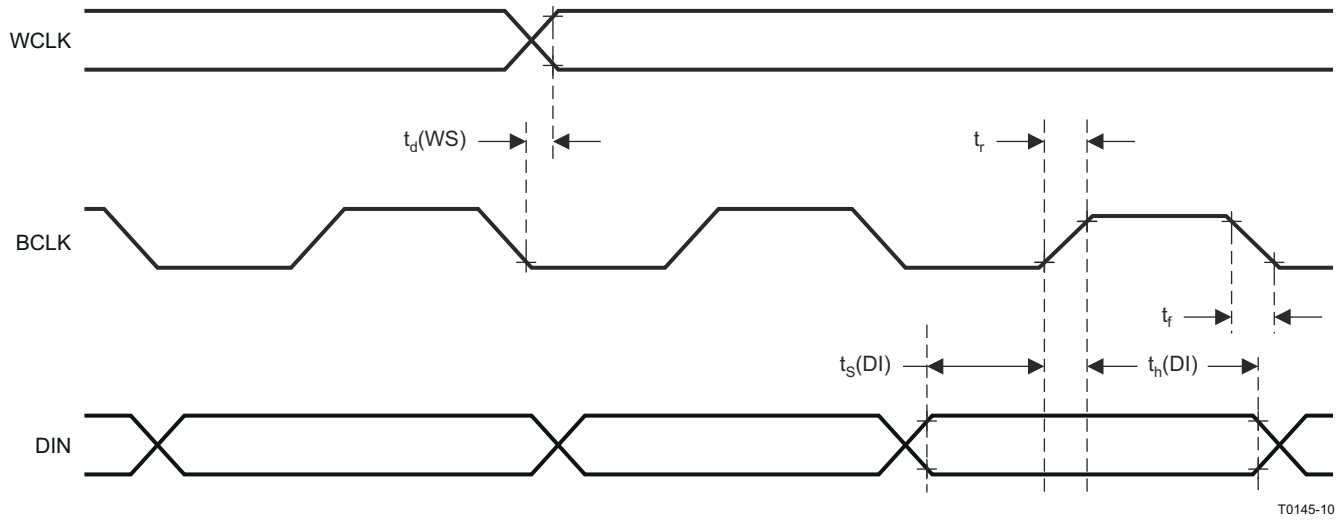

Figure 5-1. I²S/LJF/RJF Timing in Master Mode

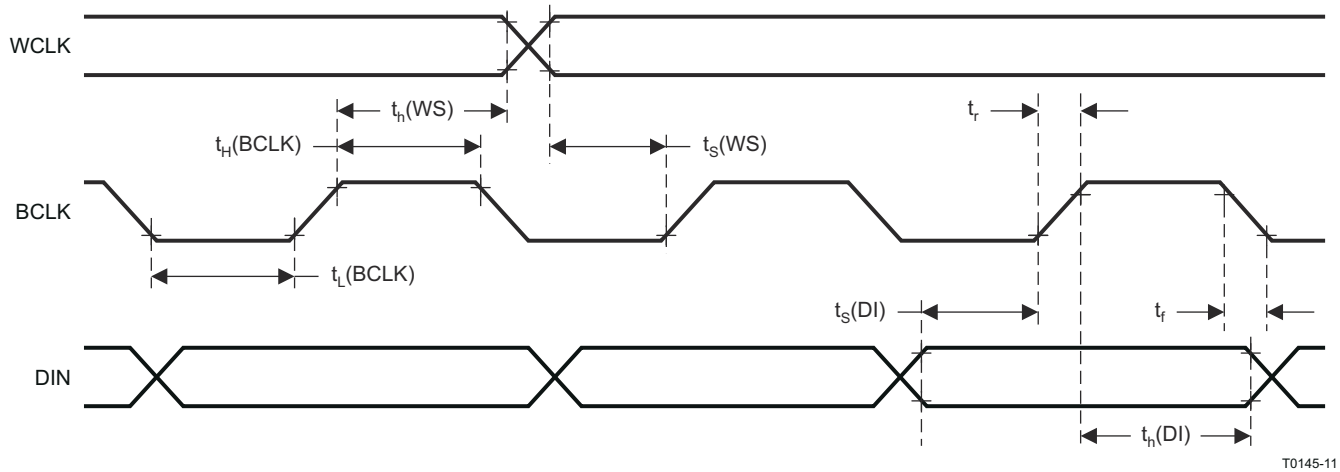

Figure 5-2. I²S/LJF/RJF Timing in Slave Mode

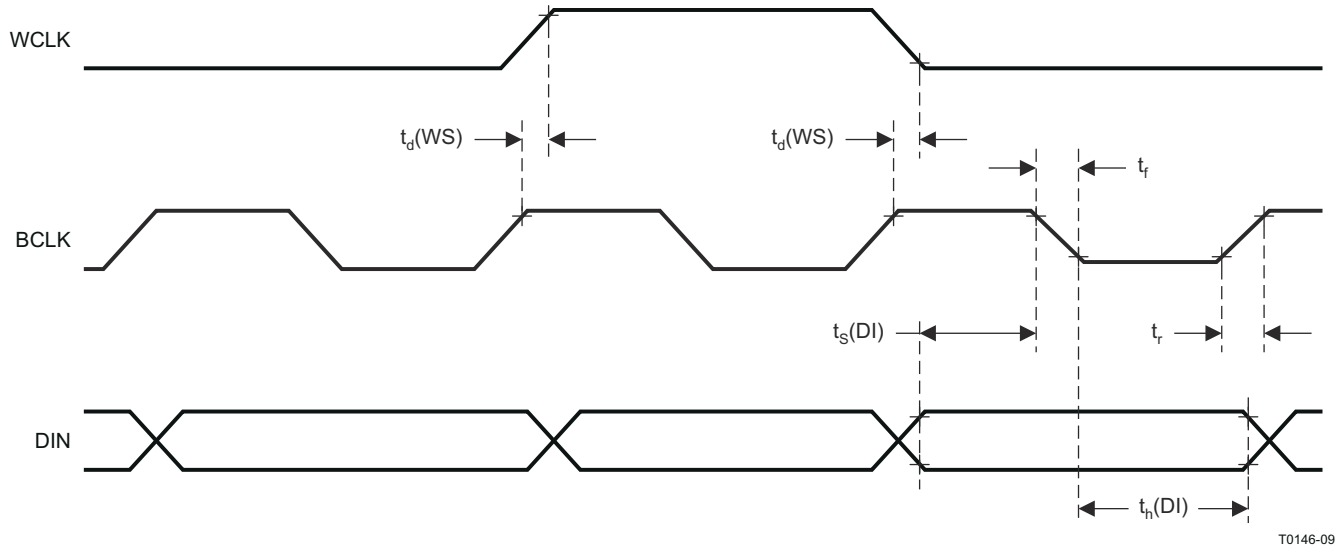

Figure 5-3. DSP Timing in Master Mode

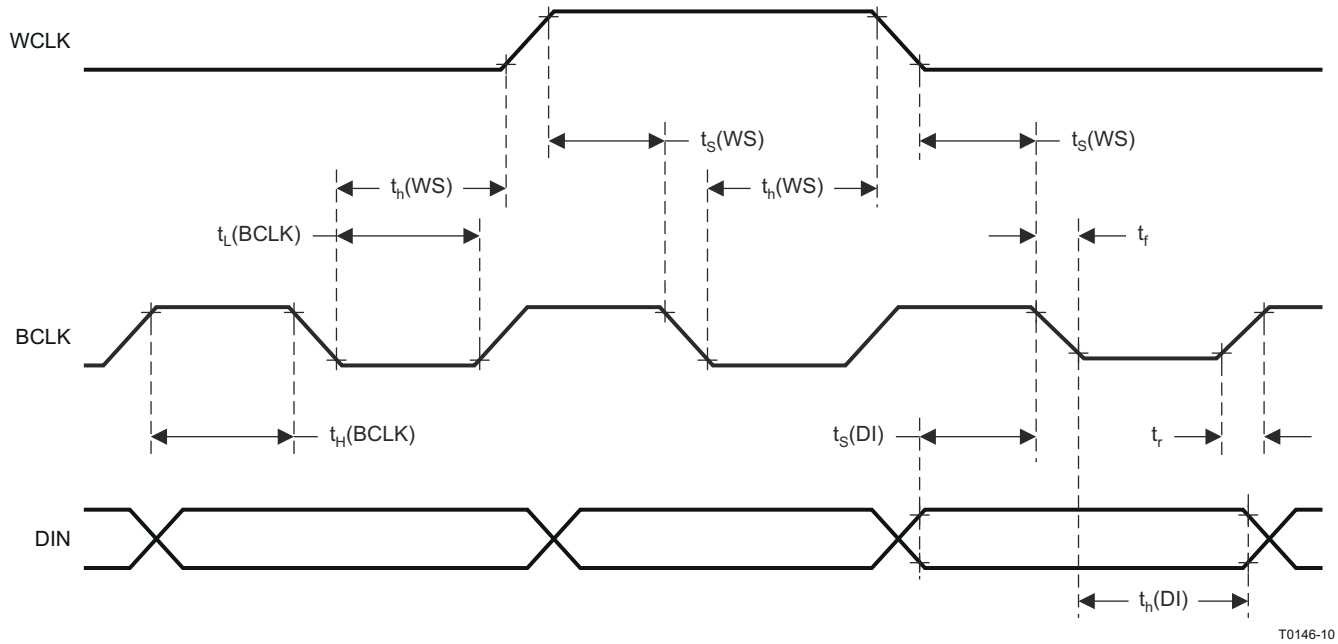

Figure 5-4. DSP Timing in Slave Mode

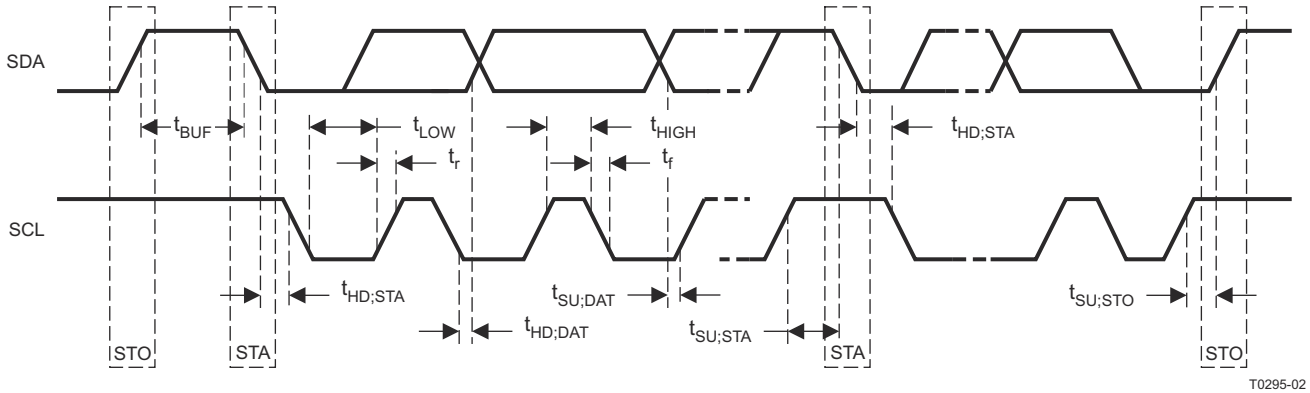

Figure 5-5. I²C Interface Timing

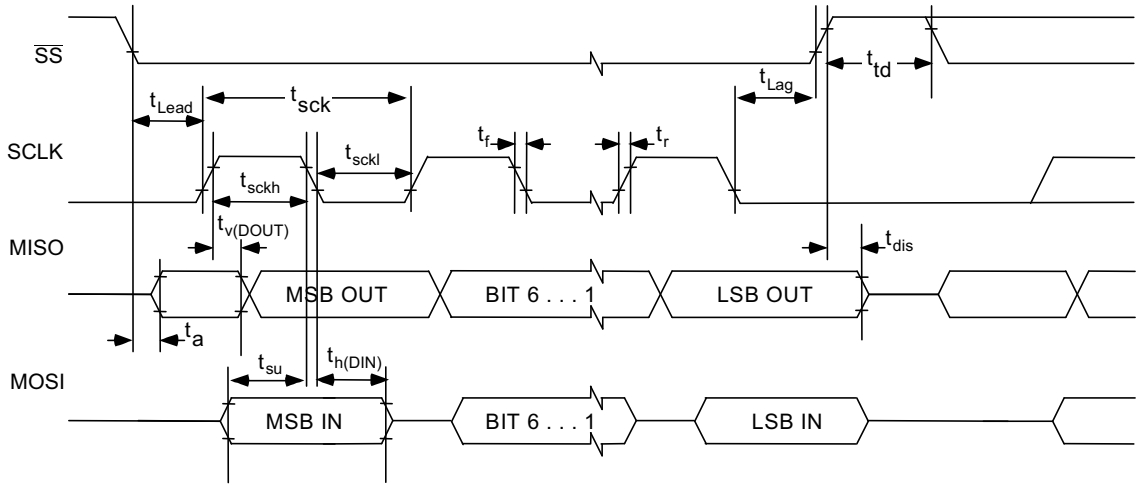

Figure 5-6. SPI Interface Timing Diagram

Copyright © 2025 Texas Instruments Incorporated

5.12 Typical Characteristics

5.12.1 Class D Speaker Driver Performance

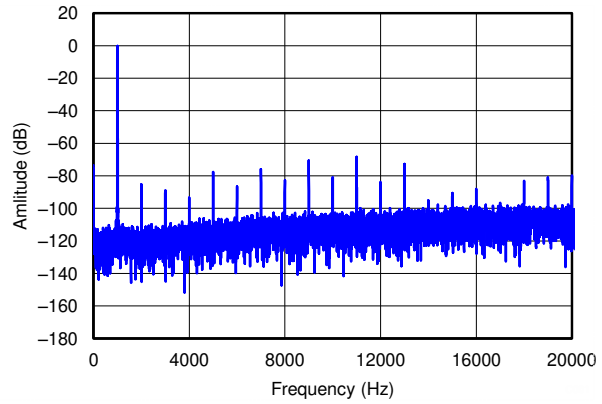

(4Ω Load)

Figure 5-7. DAC To Speaker Amplitude at 0dBFS vs Frequency

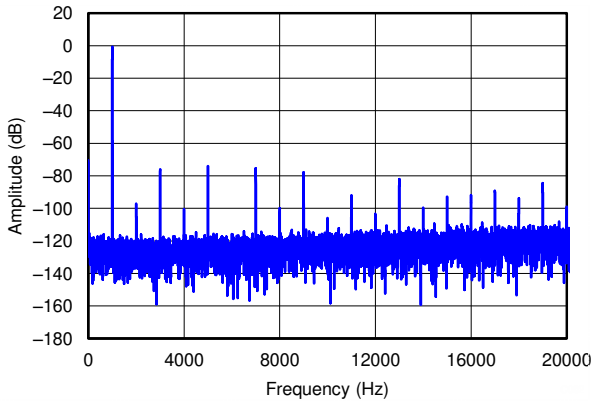

(4Ω Load)

Figure 5-8. AINL To Speaker FFT Amplitude at 0dBFS vs Frequency

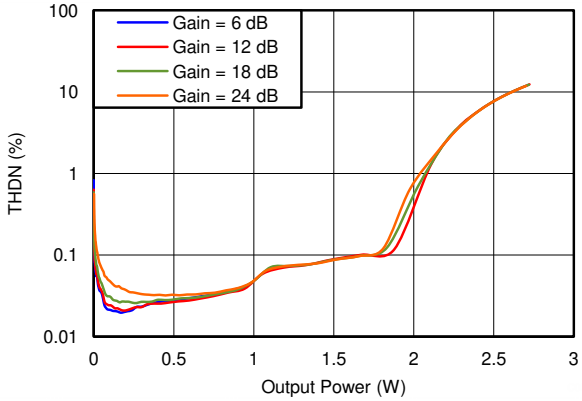

(SPKVDD = 5.5V)

Figure 5-9. Total Harmonic Distortion + Noise vs 4Ω Speaker Power

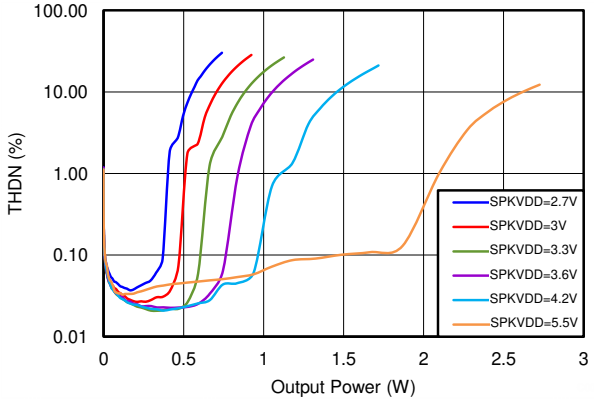

(Gain = 18dB)

Figure 5-10. Total Harmonic Distortion + Noise + NOISE vs 4Ω Speaker Power

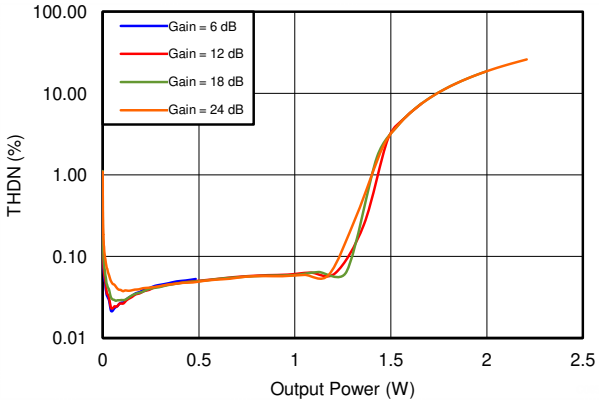

(SPKVDD = 5.5V)

Figure 5-11. Total Harmonic Distortion + Noise + NOISE vs 8Ω Speaker Power

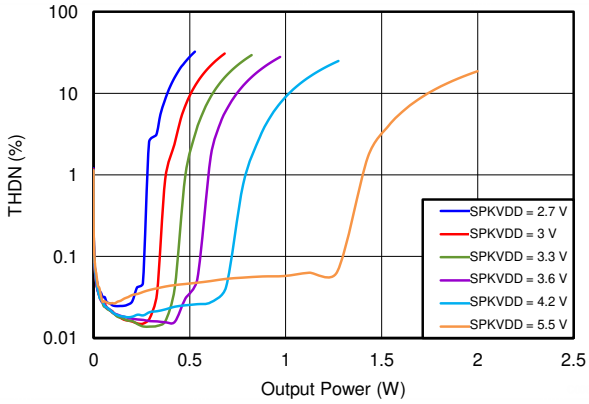

(Gain = 18dB)

Figure 5-12. Total Harmonic Distortion + Noise + NOISE vs 8Ω Speaker Power

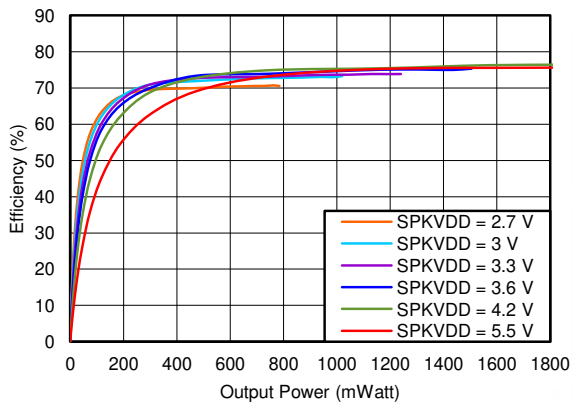

(Gain = 18dB, Load = 4Ω)

Figure 5-13. Total Power Consumption vs Output Power Consumption

5.12.2 HP Driver Performance

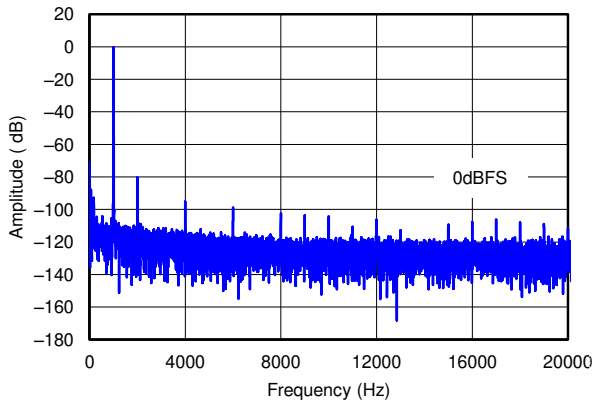

(16Ω Load)

Figure 5-14. DAC TO HP FFT Amplitude at 0dBFS vs Frequency

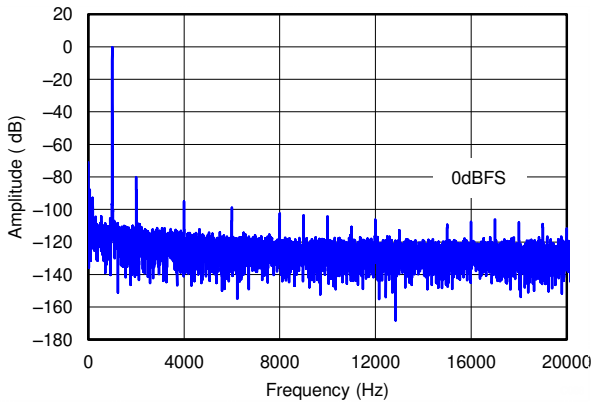

(16Ω Load)

Figure 5-15. AINL TO HP FFT Amplitude at 0dBFS vs Frequency

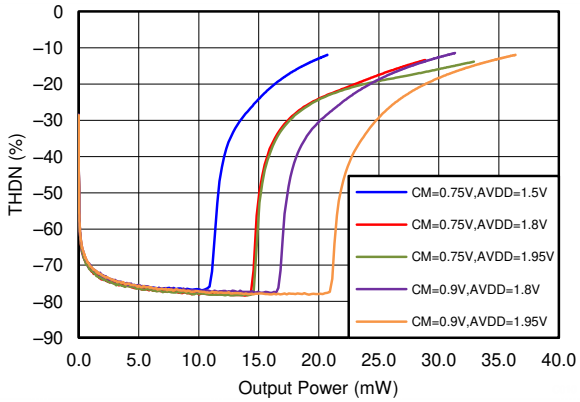

(Gain = 9dB)

Figure 5-16. Total Harmonic Distortion + Noise vs HP Power

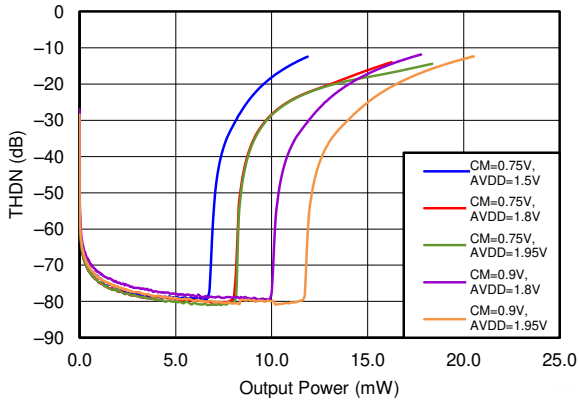

(Gain = 32dB)

Figure 5-17. Total Harmonic Distortion + Noise vs HP Power

Copyright © 2025 Texas Instruments Incorporated

6 Parameter Measurement Information

All parameters are measured according to the conditions described in the *Section 5* section.

7 Detailed Description

7.1 Overview

TAS2505 is a low power analog and digital input class-D speaker amplifier. It supports 24-bit digital I2S data for mono playback. This device is able to drive a speaker up to 4Ω and programmable digital-signal processing block. The programmable digital-signal processing block can support Bass boost, treble or EQ functions. The volume level can be controlled by register control. The device can be controlled through I^2C or SPI bus. The device also includes two analog inputs for mixing in speaker path.

7.2 Functional Block Diagram

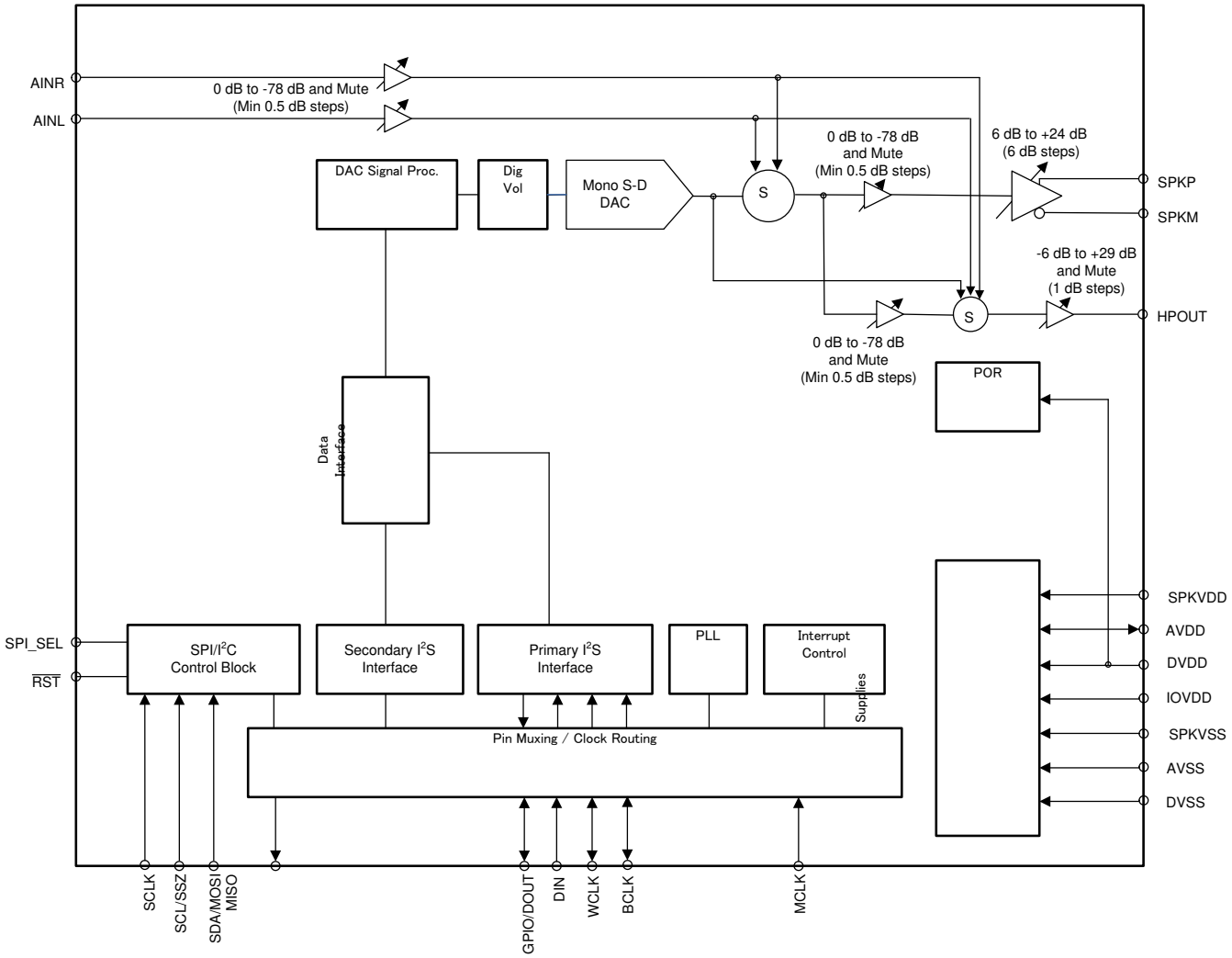

7.3 Feature Description

7.3.1 Audio Analog I/O

The TAS2505 features a mono audio DAC. The TAS2505 can drive a speaker up to 4Ω impedance.

7.3.2 Audio DAC and Audio Analog Outputs

The mono audio DAC consists of a digital audio processing block, a digital interpolation filter, a digital delta-sigma modulator, and an analog reconstruction filter. The high oversampling ratio (normally DOSR is between 32 and 128) exhibits good dynamic range by ensuring that the quantization noise generated within the delta-sigma modulator stays outside of the audio frequency band. Audio analog outputs include mono class-D speaker

Copyright © 2025 Texas Instruments Incorporated

outputs. Because the TAS2505 contains a mono DAC, it inputs the mono data from the left channel, the right channel, or a mix of the left and right channels as [(L + R) ÷ 2], selected by page 0, register 63, bits D5–D4.

For more detailed information see the *TAS2505 Application Reference Guide* (SLAU472).

7.3.3 DAC

The TAS2505 mono audio DAC supports data rates from 8kHz to 192kHz. The audio channel of the mono DAC consists of a signal-processing engine with fixed processing blocks, a digital interpolation filter, a multi-bit digital delta-sigma modulator, and an analog reconstruction filter. The DAC is designed to provide enhanced performance at low sampling rates through increased oversampling and image filtering, thereby keeping quantization noise generated within the delta-sigma modulator and observed in the signal images strongly suppressed within the audio band to beyond 20kHz. To handle multiple input rates and optimize power dissipation and performance, the TAS2505 allows the system designer to program the oversampling rates over a wide range from 1 to 1024 by configuring page 0, register 13, and page 0 / register 14. The system designer can choose higher oversampling ratios for lower input data rates and lower oversampling ratios for higher input data rates.

The TAS2505 DAC channel includes a built-in digital interpolation filter to generate oversampled data for the delta-sigma modulator. The interpolation filter can be chosen from three different types, depending on the required frequency response, group delay, and sampling rate.

The DAC path of the TAS2505 features many options for signal conditioning and signal routing:

- Digital volume control with a range of –63.5 to +24dB
- Mute function

In addition to the standard set of DAC features the TAS2505 also offers the following special features:

- Digital auto-mute
- Adaptive filter mode

7.3.4 POR

TAS2505 has a POR (Power-On-Reset) function. This function insures that all registers are automatically set to defaults when a proper power up sequence is executed.

For more detailed information see the *TAS2505 Application Reference Guide* (SLAU472).

7.3.5 CLOCK Generation and PLL

The TAS2505 supports a wide range of options for generating clocks for the DAC sections as well as interface and other control blocks. The clocks for the DAC require a source reference clock. This clock can be provided on a variety of device pins, such as the MCLK, BCLK, or GPIO pins. The source reference clock for the codec can be chosen by programming the CODEC_CLKIN value on page 0, register 4, bits D1–D0. The CODEC_CLKIN can then be routed through highly-flexible clock dividers shown in Figure 2 through 7 in the *TAS2505 Application Reference Guide* to generate the various clocks required for the DAC and the Digital Effects section also found in the *TAS2505 Application Reference Guide* (SLAU472). In the event that the desired audio clocks cannot be generated from the reference clocks on MCLK, BCLK, or GPIO, the TAS2505 also provides the option of using the on-chip PLL which supports a wide range of fractional multiplication values to generate the required clocks. Starting from CODEC_CLKIN, the TAS2505 provides several programmable clock dividers to help achieve a variety of sampling rates for the DAC and clocks for the Digital Effects sections.

For more detailed information see the *TAS2505 Application Reference Guide* (SLAU472).

7.4 Device Functional Modes

7.4.1 Digital Pins

Only a small number of digital pins are dedicated to a single function; whenever possible, the digital pins have a default function, and also can be reprogrammed to cover alternative functions for various applications.

The fixed-function pins are $\overline{RST}$ LDO_SEL and the SPI_SEL pin, which are HW control pins. Depending on the state of SPI_SEL, the two control-bus pins SCL/SSZ and SDA/MOSI are configured for either I^2C or SPI protocol.

Other digital IO pins can be configured for various functions through register control. An overview of available functionality is given in Section 7.4.3.

7.4.2 Analog Pins

Analog functions can also be configured to a large degree. For minimum power consumption, analog blocks are powered down by default. The blocks can be powered up with fine granularity according to the application needs.

7.4.3 Multifunction Pins

Table 7-1 shows the possible allocation of pins for specific functions. The PLL input, for example, can be programmed to be any of 4 pins (MCLK, BCLK, DIN, GPIO).

Table 7-1. Multifunction Pin Assignments

		1	2	3	4	5	6	7
	PIN FUNCTION	**MCLK**	**BCLK**	**WCLK**	**DIN**	**GPIO /DOUT**	**SCLK**	**MISO**
A	PLL Input	S(2)	S(3)		E		S(4)	
B	Codec Clock Input	S(2),D(5)	S(3)				S(4)	
C	I^2S BCLK input		S(3),D					
D	I^2S BCLK output		E(1)					
E	I^2S WCLK input			E, D				
F	I^2S WCLK output			E				
G	I^2S DIN				E, D			
I	General-Purpose Output I					E		
I	General-Purpose Output II							E
J	General-Purpose Input I				E			
J	General-Purpose Input II					E		
J	General-Purpose Input III						E	
K	INT1 output					E		E
L	INT2 output					E		E
M	Secondary I^2S BCLK input					E	E	
N	Secondary I^2S WCLK input					E	E	
O	Secondary I^2S DIN					E	E	
P	Secondary I^2S BCLK OUT					E		E
Q	Secondary I^2S WCLK OUT					E		E
R	Secondary I^2S DOUT							E
S	Aux Clock Output					E		E

(1) E: The pin is **exclusively** used for this function, no other function can be implemented with the same pin. (If GPIO/DOUT has been allocated for General Purpose Output, it cannot be used as the INT1 output at the same time.)
(2) S(1): The MCLK pin can drive the PLL and Codec Clock inputs **simultaneously**.
(3) S(2): The BCLK pin can drive the PLL and Codec Clock and audio interface bit clock inputs **simultaneously**.
(4) S(3): The GPIO/DOUT pin can drive the PLL and Codec Clock inputs **simultaneously**.
(5) D: Default Function

7.4.4 Analog Signals

The TAS2505 analog signals consist of:

- Analog inputs AINR and AINL, which can be used to pass-through or mix analog signals to output stages

Copyright © 2025 Texas Instruments Incorporated

- Analog outputs class-D speaker driver providing output capability for the DAC, AINR, AINL, or a mix of the three

7.4.4.1 Analog Inputs AINL and AINR

AINL (pin 3 or C2) and AINR (pin 4 or B2) are inputs to Mixer P and Mixer M along with the DAC output. Also AINL and AINR can be configured inputs to HP driver. Page1 / register 12 provides control signals for determining the signals routed through Mixer P, Mixer M and HP driver. Input of Mixer P can be attenuated by Page1 / register 24, input of Mixer M can be attenuated by Page1 / register 25 and input of HP driver can be attenuated by Page1 / register 22. Also AINL and AINR can be configured to a monaural differential input with use Mixer P and Mixer M by Page1 / register 12 setting.

For more detailed information see the *TAS2505 Application Reference Guide* (SLAU472).

7.4.5 DAC Processing Blocks — Overview

The TAS2505 implements signal-processing capabilities and interpolation filtering through processing blocks. These fixed processing blocks give users the choice of how much and what type of signal processing they may use and which interpolation filter is applied.

The choices among these processing blocks allows the system designer to balance power conservation and signal-processing flexibility. Table 7-2 gives an overview of all available processing blocks of the DAC channel and their properties. The resource-class column gives an approximate indication of power consumption for the digital (DVDD) supply; however, based on the out-of-band noise spectrum, the analog power consumption of the drivers (AVDD) may differ.

The signal-processing blocks available are:

- First-order IIR
- Scalable number of biquad filters

The processing blocks are tuned for common cases and can achieve high image rejection or low group delay in combination with various signal-processing effects such as audio effects and frequency shaping. The available first-order IIR and biquad filters have fully user-programmable coefficients.

Table 7-2. Overview – DAC Predefined Processing Blocks

PROCESSING BLOCK NO.	INTERPOLATION FILTER	CHANNEL	FIRST-ORDER IIR AVAILABLE	NUMBER OF BIQUADS	RESOURCE CLASS
PRB_P1	A	Mono	Yes	6	6
PRB_P2	A	Mono	No	3	4
PRB_P3	B	Mono	Yes	6	4

For more detailed information see the *TAS2505 Application Reference Guide* (SLAU472).

7.4.6 Digital Mixing and Routing

The TAS2505 has four digital mixing blocks. Each mixer can provide either mixing or multiplexing of the digital audio data. The first mixer or multiplexer can be used to select input data for the mono DAC from left channel, right channel, or (left channel + right channel) / 2 mixing. This digital routing can be configured by writing to page 0, register 63, bits D5–D4.

7.4.7 Analog Audio Routing

The TAS2505 has the capability to route the DAC output to the speaker output. If desirable, both output drivers can be operated at the same time while playing at different volume levels. The TAS2505 provides various digital routing capabilities, allowing digital mixing or even channel swapping in the digital domain. All analog outputs other than the selected ones can be powered down for optimal power consumption.

For more detailed information see the *TAS2505 Application Reference Guide* (SLAU472).

Copyright © 2025 Texas Instruments Incorporated

7.4.8 Digital Audio and Control Interface

7.4.8.1 Digital Audio Interface

Audio data is transferred between the host processor and the TAS2505 via the digital audio data serial interface, or audio bus. The audio bus on this device is flexible, including left- or right-justified data options, support for I^2S or PCM protocols, programmable data-length options, a TDM mode for multichannel operation, flexible master or slave configurability for each bus clock line, and the ability to communicate with multiple devices within a system directly.

The audio bus of the TAS2505 can be configured for left- or right-justified, I^2S, DSP, or TDM modes of operation, where communication with standard telephony PCM interfaces is supported within the TDM mode. These modes are all MSB-first, with data width programmable as 16, 20, 24, or 32 bits by configuring page 0, register 27, bits D5–D4. In addition, the word clock and bit clock can be independently configured in either master or slave mode for flexible connectivity to a wide variety of processors. The word clock is used to define the beginning of a frame, and may be programmed as either a pulse or a square-wave signal. The frequency of this clock corresponds to the maximum of the selected DAC sampling frequencies.

For more detailed information see the *TAS2505 Application Reference Guide* (SLAU472).

7.4.8.2 Control Interface

The TAS2505 control interface supports SPI or I^2C communication protocols, with the protocol selectable using the SPI_SEL pin. For SPI, SPI_SEL should be tied high; for I^2C, SPI_SEL should be tied low. TI does not recommend changing the state of SPI_SEL during device operation.

7.4.8.2.1 I^2C Control Mode

The TAS2505 supports the I^2C control protocol, and will respond to the I^2C address of 0011 000. I^2C is a two-wire, open-drain interface supporting multiple devices and masters on a single bus. Devices on the I^2C bus only drive the bus lines LOW by connecting them to ground; they never drive the bus lines HIGH. Instead, the bus wires are pulled HIGH by pullup resistors, so the bus wires are HIGH when no device is driving them LOW. This way, two devices cannot conflict; if two devices drive the bus simultaneously, there is no driver contention.

7.4.8.2.2 SPI Digital Interface

In the SPI control mode, the TAS2505 uses the pins SCL/SSZ=SSZ, SCLK=SCLK, MISO=MISO, SDA/MOSI=MOSI as a standard SPI port with clock polarity setting of 0 (typical microprocessor SPI control bit CPOL = 0). The SPI port allows full-duplex, synchronous, serial communication between a host processor (the master) and peripheral devices (slaves). The SPI master (in this case, the host processor) generates the synchronizing clock (driven onto SCLK) and initiates transmissions. The SPI slave devices (such as the TAS2505) depend on a master to start and synchronize transmissions. A transmission begins when initiated by an SPI master. The byte from the SPI master begins shifting in on the slave MOSI pin under the control of the master serial clock (driven onto SCLK). As the byte shifts in on the MOSI pin, a byte shifts out on the MISO pin to the master shift register.

For more detailed information see the *TAS2505 Application Reference Guide* (SLAU472).

7.4.8.3 Device Special Functions

- Interrupt generation
- Flexible pin multiplexing

For more detailed information see the *TAS2505 Application Reference Guide* (SLAU472).

Copyright © 2025 Texas Instruments Incorporated

8 Register Map

Table 8-1. Summary of Register Map

Decimal		Hex		DESCRIPTION
PAGE NO.	REG. NO.	PAGE NO.	REG. NO.	
0	0	0x00	0x00	Page Select Register
0	1	0x00	0x01	Software Reset Register
0	2 - 3	0x00	0x02 - 0x03	Reserved Registers
0	4	0x00	0x04	Clock Setting Register 1, Multiplexers
0	5	0x00	0x05	Clock Setting Register 2, PLL P and R Values
0	6	0x00	0x06	Clock Setting Register 3, PLL J Values
0	7	0x00	0x07	Clock Setting Register 4, PLL D Values (MSB)
0	8	0x00	0x08	Clock Setting Register 5, PLL D Values (LSB)
0	9 - 10	0x00	0x09 - 0x0A	Reserved Registers
0	11	0x00	0x0B	Clock Setting Register 6, NDAC Values
0	12	0x00	0x0C	Clock Setting Register 7, MDAC Values
0	13	0x00	0x0D	DAC OSR Setting Register 1, MSB Value
0	14	0x00	0x0E	DAC OSR Setting Register 2, LSB Value
0	15 - 24	0x00	0x0F - 0x18	Reserved Registers
0	25	0x00	0x19	Clock Setting Register 10, Multiplexers
0	26	0x00	0x1A	Clock Setting Register 11, CLKOUT M divider value
0	27	0x00	0x1B	Audio Interface Setting Register 1
0	28	0x00	0x1C	Audio Interface Setting Register 2, Data offset setting
0	29	0x00	0x1D	Audio Interface Setting Register 3
0	30	0x00	0x1E	Clock Setting Register 12, BCLK N Divider
0	31	0x00	0x1F	Audio Interface Setting Register 4, Secondary Audio Interface
0	32	0x00	0x20	Audio Interface Setting Register 5
0	33	0x00	0x21	Audio Interface Setting Register 6
0	34	0x00	0x22	Reserved Register
0	35 - 36	0x00	0x23 - 0x24	Reserved Registers
0	37	0x00	0x25	DAC Flag Register 1
0	38	0x00	0x26	DAC Flag Register 2
0	39-41	0x00	0x27-0x29	Reserved Registers
0	42	0x00	0x2A	Sticky Flag Register 1
0	43	0x00	0x2B	Interrupt Flag Register 1
0	44	0x00	0x2C	Sticky Flag Register 2
0	45	0x00	0x2D	Reserved Register
0	46	0x00	0x2E	Interrupt Flag Register 2
0	47	0x00	0x2F	Reserved Register
0	48	0x00	0x30	INT1 Interrupt Control Register
0	49	0x00	0x31	INT2 Interrupt Control Register
0	50-51	0x00	0x32-0x33	Reserved Registers
0	52	0x00	0x34	GPIO/DOUT Control Register
0	53	0x00	0x35	DOUT Function Control Register
0	54	0x00	0x36	DIN Function Control Register
0	55	0x00	0x37	MISO Function Control Register
0	56	0x00	0x38	SCLK/DMDIN2 Function Control Register

Copyright © 2025 Texas Instruments Incorporated

Table 8-1. Summary of Register Map (continued)

Decimal		Hex		DESCRIPTION
PAGE NO.	REG. NO.	PAGE NO.	REG. NO.	
0	57-59	0x00	0x39-0x3B	Reserved Registers
0	60	0x00	0x3C	DAC Instruction Set
0	61 - 62	0x00	0x3D -0x3E	Reserved Registers
0	63	0x00	0x3F	DAC Channel Setup Register 1
0	64	0x00	0x40	DAC Channel Setup Register 2
0	65	0x00	0x41	DAC Channel Digital Volume Control Register
0	66 - 80	0x00	0x42 - 0x50	Reserved Registers
0	81	0x00	0x51	Dig_Mic Control Register
0	82 - 127	0x00	0x52 - 0x7F	Reserved Registers
1	0	0x01	0x00	Page Select Register
1	1	0x01	0x01	REF, POR and BGAP Control Register
1	2	0x01	0x02	Reserved Register
1	3	0x01	0x03	Playback Configuration Register 1
1	4 - 7	0x01	0x04 - 0x07	Reserved Registers
1	8	0x01	0x08	DAC PGA Control Register
1	9	0x01	0x09	Output Drivers, AINL, AINR, Control Register
1	10	0x01	0x0A	Common Mode Control Register
1	11	0x01	0x0B	HP Over Current Protection Configuration Register
1	12	0x01	0x0C	HP Routing Selection Register
1	13 - 15	0x01	0x0D - 0x0F	Reserved Registers
1	16	0x01	0x10	Reserved Registers
1	17 - 19	0x01	0x11 - 0x13	Reserved Registers
1	20	0x01	0x14	Reserved Registers
1	21	0x01	0x15	Reserved Register
1	22	0x01	0x16	Reserved Registers
1	23	0x01	0x17	Reserved Register
1	24	0x01	0x18	AINL Volume Control Register
1	25	0x01	0x19	AINR Volume Control Register
1	26 - 44	0x01	0x1A - 0x2C	Reserved Registers
1	45	0x01	0x2D	Speaker Amplifier Control 1
1	46	0x01	0x2E	Speaker Volume Control Register
1	47	0x01	0x2F	Reserved Register
1	48	0x01	0x30	Speaker Amplifier Volume Control 2
1	49 - 62	0x01	0x31 - 0x3E	Right MICPGA Positive Terminal Input Routing Configuration Register
1	64 - 121	0x01	0x40 - 0x79	Reserved Registers
1	122	0x01	0x7A	Reference Power Up Delay
1	123 - 127	0x01	0x7B - 0x7F	Reserved Registers
2 - 43	0 - 127	0x02 - 0x2B	0x00 - 0x7F	Reserved Registers
44	0	0x2C	0x00	Page Select Register
44	1	0x2C	0x01	DAC Adaptive Filter Configuration Register
44	2 - 7	0x2C	0x02 - 0x07	Reserved
44	8 - 127	0x2C	0x08 - 0x7F	DAC Coefficients Buffer-A C(0:29)
45 - 52	0	0x2D-0x34	0x00	Page Select Register
45 - 52	1 - 7	0x2D-0x34	0x01 - 0x07	Reserved.

Copyright © 2025 Texas Instruments Incorporated

Table 8-1. Summary of Register Map (continued)

Decimal		Hex		DESCRIPTION
PAGE NO.	REG. NO.	PAGE NO.	REG. NO.	
45 - 52	8 - 127	0x2D-0x34	0x08 - 0x7F	DAC Coefficients Buffer-A C(30:255)
53 - 61	0 - 127	0x35 - 0x3D	0x00 - 0x7F	Reserved Registers
62 - 70	0	0x3E-0x46	0x00	Page Select Register
62 - 70	1 - 7	0x3E-0x46	0x01 - 0x07	Reserved Registers
62 - 70	8 - 127	0x3E-0x46	0x08 - 0x7F	DAC Coefficients Buffer-B C(0:255)
71 - 255	0 - 127	0x47 - 0x7F	0x00 - 0x7F	Reserved Registers

Copyright © 2025 Texas Instruments Incorporated

9 Application and Implementation

Note

Information in the following applications sections is not part of the TI component specification, and TI does not warrant its accuracy or completeness. TI's customers are responsible for determining suitability of components for their purposes. Customers should validate and test their design implementation to confirm system functionality.

9.1 Application Information

The TAS2505 is a digital or analog input Class-D audio power amplifier. Below are shown different setups that show the features of the TAS2505.

9.2 Typical Applications

9.2.1 Typical Configuration

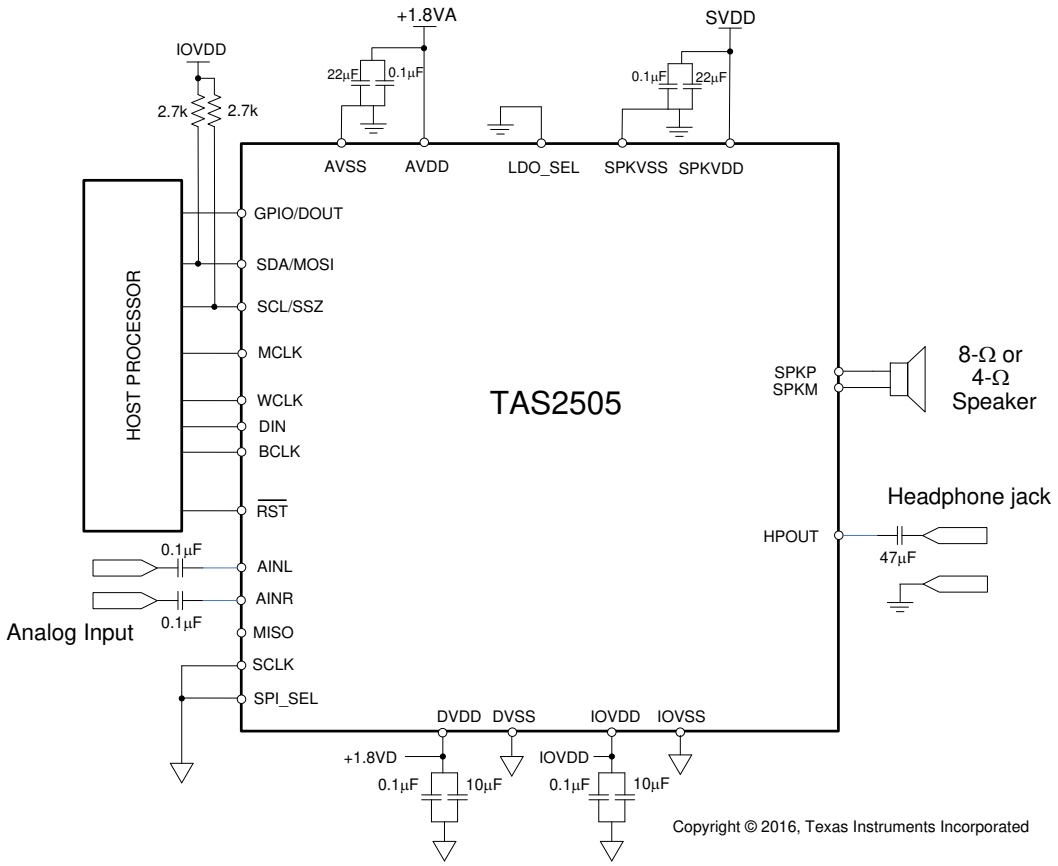

Figure 9-1. Typical Circuit Configuration

Copyright © 2025 Texas Instruments Incorporated

9.2.1.1 Design Requirements

Table 9-1 shows the design parameters.

Table 9-1. Design Parameters

PARAMETER	EXAMPLE VALUE
Audio input	Digital Audio (I^2S), Analog Audio AINx
Speaker	8Ω or 4Ω

9.2.1.2 Detailed Design Procedure

In this application, the device is able to use both digital and analog inputs, working in mono output by summing left and right analog inputs and output from DAC and routing this signal into the speaker output.

External 1.8V supply is used to power AVDD and DVDD. IOVDD can be supplied by voltages between 1.1V and 3.6V which lets the system to use conventional 1.8V or 3.3V supplies. The SPKVDD can be connected to voltages between 2.7V and 5.5V, although it is usually supplied by a 5V voltage.

Decoupling capacitors should be used at all the supply lines. TI recommends using 0.1µF, 10µF, and 22µF capacitors for a better system performance.

Decoupling series capacitors must be used at the analog input.

All grounds are tied together; route analog and digital paths are separated to avoid interference.

9.2.1.3 Application Curves

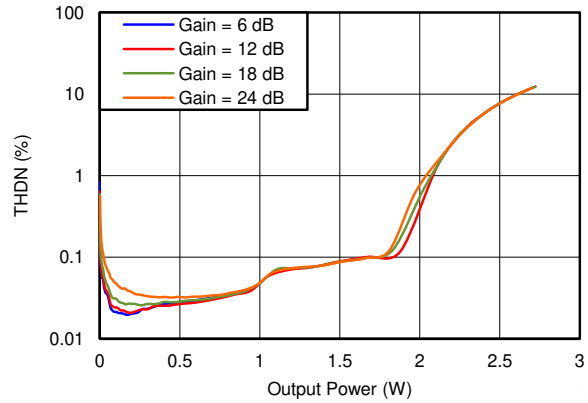

(SPKVDD = 5.5V)

Figure 9-2. Total Harmonic Distortion + Noise vs 4Ω Speaker Power

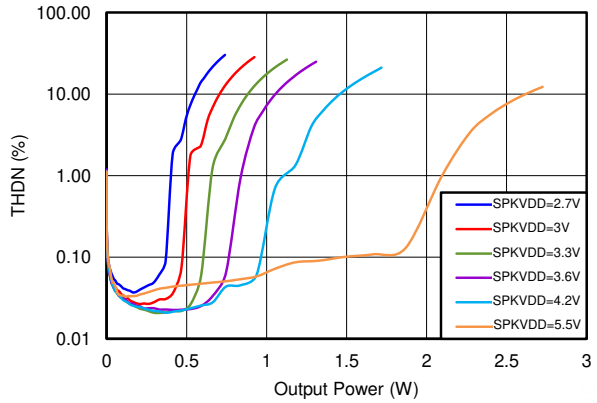

(Gain = 18dB)

Figure 9-3. Total Harmonic Distortion + Noise vs 4Ω Speaker Power

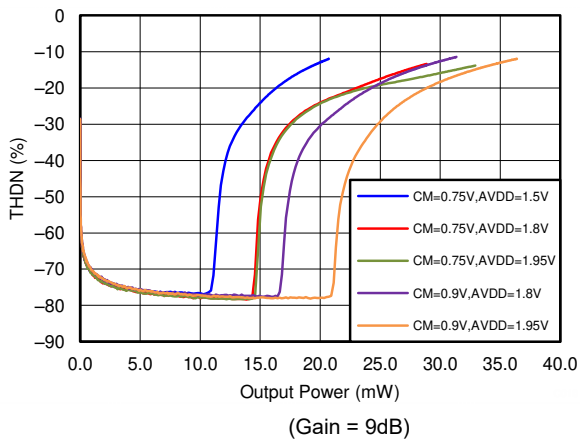

(Gain = 9dB)

Figure 9-4. Total Harmonic Distortion + Noise vs HP Power

9.3 Power Supply Recommendations

The TAS2505 integrates a large amount of digital and analog functionality, and each of these blocks can be powered separately to enable the system to select appropriate power supplies for desired performance and power consumption. The device has separate power domains for digital IO, digital core, analog core, analog input and speaker drivers. If desired, all of the supplies (except for the supplies for speaker drivers, which can directly connect to the battery) can be connected together and be supplied from one source in the range of 1.65 to 1.95V. Individually, the IOVDD voltage can be supplied in the range of 1.1V to 3.6V. For improved power efficiency, the digital core power supply can range from 1.26V to 1.95V. The AVDD pin can directly be driven with a voltage in the range of 1.5V to 1.95V. The speaker driver voltages (SPKVDD) can range from 2.7V to 5.5V. SPKVDD supply slew rate needs to be lower than 20ms.

For more detailed information see the *TAS2505 Application Reference Guide* (SLAU472).

9.4 Layout

9.4.1 Layout Guidelines

- If the analog input, AINR and AINL, are:
  - Used, analog input traces must be routed symmetrically for true differential performance.
  - Used, do not run analog input traces parallel to digital lines.
  - Used, they must be AC-coupled.
  - Not used, they must be shorted together.
- Use a ground plane with multiple vias for each terminal to create a low-impedance connection to GND for minimum ground noise.
- Use supply decoupling capacitors.

Copyright © 2025 Texas Instruments Incorporated

9.4.2 Layout Example

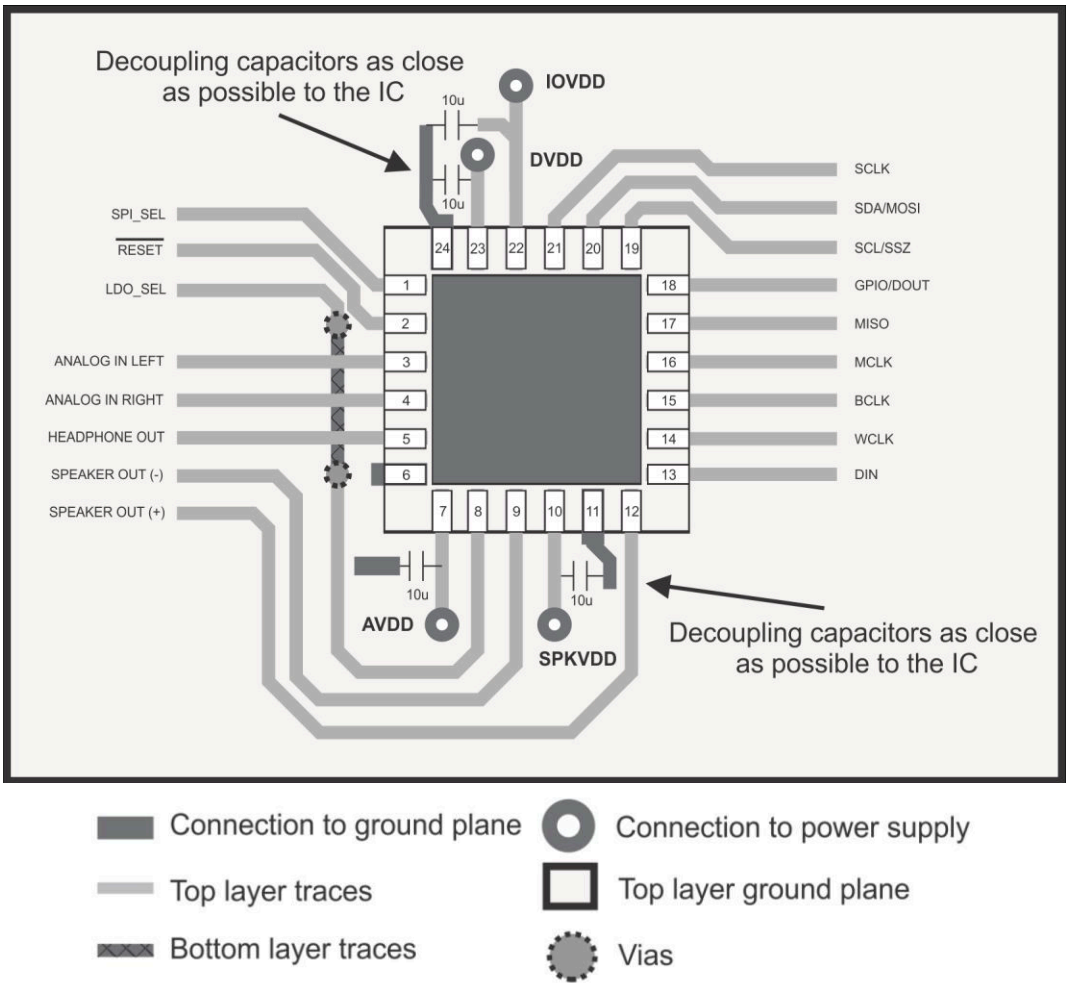

Figure 9-5. Layout Diagram

10 Device and Documentation Support

10.1 Third-Party Products Disclaimer

TI'S PUBLICATION OF INFORMATION REGARDING THIRD-PARTY PRODUCTS OR SERVICES DOES NOT CONSTITUTE AN ENDORSEMENT REGARDING THE SUITABILITY OF SUCH PRODUCTS OR SERVICES OR A WARRANTY, REPRESENTATION OR ENDORSEMENT OF SUCH PRODUCTS OR SERVICES, EITHER ALONE OR IN COMBINATION WITH ANY TI PRODUCT OR SERVICE.

10.2 Documentation Support

10.2.1 Related Documentation

For related documentation see the following:

TAS2505 Application Reference Guide (SLAU472)

10.3 Receiving Notification of Documentation Updates

To receive notification of documentation updates, navigate to the device product folder on ti.com. Click on *Notifications* to register and receive a weekly digest of any product information that has changed. For change details, review the revision history included in any revised document.

10.4 Support Resources

TI E2E™ support forums are an engineer's go-to source for fast, verified answers and design help — straight from the experts. Search existing answers or ask your own question to get the quick design help you need.

Linked content is provided "AS IS" by the respective contributors. They do not constitute TI specifications and do not necessarily reflect TI's views; see TI's Terms of Use.

10.5 Trademarks

TI E2E™ is a trademark of Texas Instruments.
All trademarks are the property of their respective owners.

10.6 Electrostatic Discharge Caution

This integrated circuit can be damaged by ESD. Texas Instruments recommends that all integrated circuits be handled with appropriate precautions. Failure to observe proper handling and installation procedures can cause damage.

ESD damage can range from subtle performance degradation to complete device failure. Precision integrated circuits may be more susceptible to damage because very small parametric changes could cause the device not to meet its published specifications.

10.7 Glossary

TI Glossary This glossary lists and explains terms, acronyms, and definitions.

10.8 Community Resources

11 Revision History

NOTE: Page numbers for previous revisions may differ from page numbers in the current version.

Changes from Revision C (September 2021) to Revision D (January 2025)	Page
• Errata in RevC datasheet with the LDO_SEL feature fixed	3

Changes from Revision B (November 2016) to Revision C (September 2021)	Page
• Removed all references to LDO mode and LDO_SEL pin throughout data sheet	1

Copyright © 2025 Texas Instruments Incorporated

Changes from Revision A (February 2013) to Revision B (November 2016)	Page
• Added *Device Information* table, *ESD Ratings* table, *Feature Description* section, *Device Functional Modes*, *Application and Implementation* section, *Power Supply Recommendations* section, *Layout* section, *Device and Documentation Support* section, and *Mechanical, Packaging, and Orderable Information* section.	1

Changes from Revision * (February 2013) to Revision A (February 2013)	Page
• Deleted P_O (Max Output power) SPKVDD = 5.5 V, THD = 10%	5
• Changed P_O (Max Output power) SPKVDD = 5.5 V value From: TYP = 2.1 W To: MAX = 2 W	5

12 Mechanical, Packaging, and Orderable Information

The following pages include mechanical, packaging, and orderable information. This information is the most current data available for the designated devices. This data is subject to change without notice and revision of this document. For browser-based versions of this data sheet, refer to the left-hand navigation.

The TAS2505TRGERQ1 orderable part number uses package outline RGE0024K, and the TAS2505ATRGERQ1 orderable part number uses package outline RGE0024Y.

PACKAGING INFORMATION

Orderable part number	Status (1)	Material type (2)	Package | Pins	Package qty | Carrier	RoHS (3)	Lead finish/ Ball material (4)	MSL rating/ Peak reflow (5)	Op temp (°C)	Part marking (6)
TAS2505IRGER	Active	Production	VQFN (RGE) | 24	3000 | LARGE T&R	Yes	Call TI | Nipdau	Level-1-260C-UNLIM	-40 to 85	TAS 2505
TAS2505IRGER.A	Active	Production	VQFN (RGE) | 24	3000 | LARGE T&R	Yes	NIPDAU	Level-1-260C-UNLIM	-40 to 85	TAS 2505
TAS2505IRGET	Active	Production	VQFN (RGE) | 24	250 | SMALL T&R	Yes	Call TI | Nipdau	Level-1-260C-UNLIM	-40 to 85	TAS 2505
TAS2505IRGET.A	Active	Production	VQFN (RGE) | 24	250 | SMALL T&R	Yes	NIPDAU	Level-1-260C-UNLIM	-40 to 85	TAS 2505
TAS2505IRGETG4	Active	Production	VQFN (RGE) | 24	250 | SMALL T&R	Yes	NIPDAU	Level-1-260C-UNLIM	-40 to 85	TAS 2505
TAS2505IRGETG4.A	Active	Production	VQFN (RGE) | 24	250 | SMALL T&R	Yes	NIPDAU	Level-1-260C-UNLIM	-40 to 85	TAS 2505

(1) **Status:** For more details on status, see our product life cycle.

(2) **Material type:** When designated, preproduction parts are prototypes/experimental devices, and are not yet approved or released for full production. Testing and final process, including without limitation quality assurance, reliability performance testing, and/or process qualification, may not yet be complete, and this item is subject to further changes or possible discontinuation. If available for ordering, purchases will be subject to an additional waiver at checkout, and are intended for early internal evaluation purposes only. These items are sold without warranties of any kind.

(3) **RoHS values:** Yes, No, RoHS Exempt. See the TI RoHS Statement for additional information and value definition.

(4) **Lead finish/Ball material:** Parts may have multiple material finish options. Finish options are separated by a vertical ruled line. Lead finish/Ball material values may wrap to two lines if the finish value exceeds the maximum column width.

(5) **MSL rating/Peak reflow:** The moisture sensitivity level ratings and peak solder (reflow) temperatures. In the event that a part has multiple moisture sensitivity ratings, only the lowest level per JEDEC standards is shown. Refer to the shipping label for the actual reflow temperature that will be used to mount the part to the printed circuit board.

(6) **Part marking:** There may be an additional marking, which relates to the logo, the lot trace code information, or the environmental category of the part.

Multiple part markings will be inside parentheses. Only one part marking contained in parentheses and separated by a "~" will appear on a part. If a line is indented then it is a continuation of the previous line and the two combined represent the entire part marking for that device.

Important Information and Disclaimer: The information provided on this page represents TI's knowledge and belief as of the date that it is provided. TI bases its knowledge and belief on information provided by third parties, and makes no representation or warranty as to the accuracy of such information. Efforts are underway to better integrate information from third parties. TI has taken and continues to take reasonable steps to provide representative and accurate information but may not have conducted destructive testing or chemical analysis on incoming materials and chemicals. TI and TI suppliers consider certain information to be proprietary, and thus CAS numbers and other limited information may not be available for release.

In no event shall TI's liability arising out of such information exceed the total purchase price of the TI part(s) at issue in this document sold by TI to Customer on an annual basis.

OTHER QUALIFIED VERSIONS OF TAS2505 :

- Automotive : TAS2505-Q1

NOTE: Qualified Version Definitions:

- Automotive - Q100 devices qualified for high-reliability automotive applications targeting zero defects

TAPE AND REEL INFORMATION

REEL DIMENSIONS

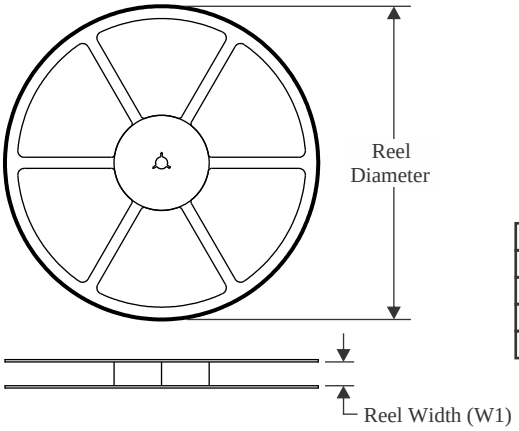

TAPE DIMENSIONS

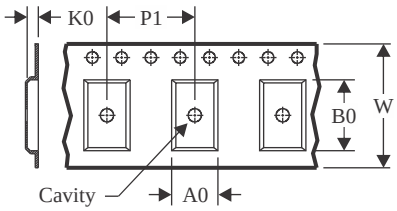

A0	Dimension designed to accommodate the component width
B0	Dimension designed to accommodate the component length
K0	Dimension designed to accommodate the component thickness
W	Overall width of the carrier tape
P1	Pitch between successive cavity centers

QUADRANT ASSIGNMENTS FOR PIN 1 ORIENTATION IN TAPE

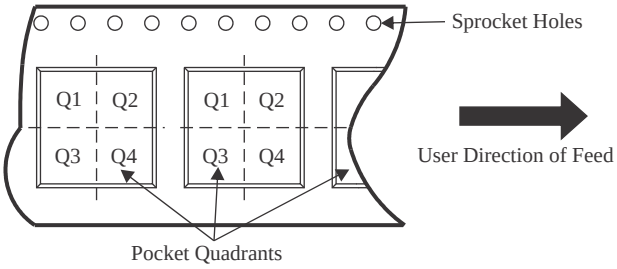

*All dimensions are nominal

Device	Package Type	Package Drawing	Pins	SPQ	Reel Diameter (mm)	Reel Width W1 (mm)	A0 (mm)	B0 (mm)	K0 (mm)	P1 (mm)	W (mm)	Pin1 Quadrant
TAS2505IRGER	VQFN	RGE	24	3000	330.0	12.4	4.25	4.25	1.15	8.0	12.0	Q2
TAS2505IRGER	VQFN	RGE	24	3000	330.0	12.4	4.25	4.25	1.15	8.0	12.0	Q2
TAS2505IRGET	VQFN	RGE	24	250	330.0	12.4	4.25	4.25	1.15	8.0	12.0	Q2
TAS2505IRGET	VQFN	RGE	24	250	180.0	12.4	4.25	4.25	1.15	8.0	12.0	Q2
TAS2505IRGETG4	VQFN	RGE	24	250	330.0	12.4	4.25	4.25	1.15	8.0	12.0	Q2
TAS2505IRGETG4	VQFN	RGE	24	250	180.0	12.4	4.25	4.25	1.15	8.0	12.0	Q2

TAPE AND REEL BOX DIMENSIONS

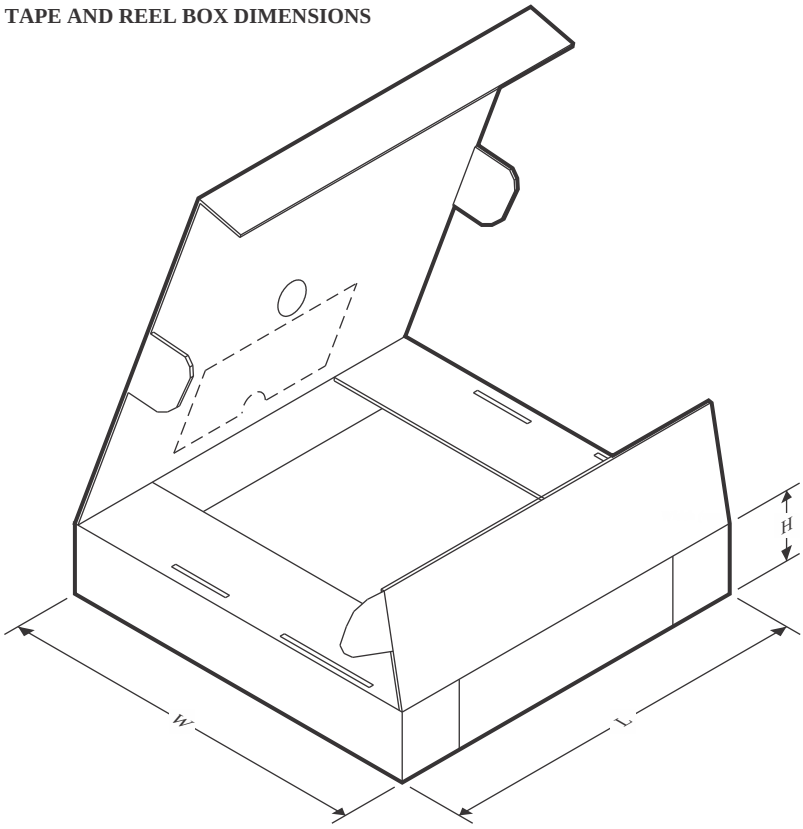

*All dimensions are nominal

Device	Package Type	Package Drawing	Pins	SPQ	Length (mm)	Width (mm)	Height (mm)
TAS2505IRGER	VQFN	RGE	24	3000	367.0	367.0	35.0
TAS2505IRGER	VQFN	RGE	24	3000	346.0	346.0	33.0
TAS2505IRGET	VQFN	RGE	24	250	367.0	367.0	35.0
TAS2505IRGET	VQFN	RGE	24	250	210.0	185.0	35.0
TAS2505IRGETG4	VQFN	RGE	24	250	367.0	367.0	35.0
TAS2505IRGETG4	VQFN	RGE	24	250	210.0	185.0	35.0

RGE 24 VQFN - 1 mm max height

PLASTIC QUAD FLATPACK - NO LEAD

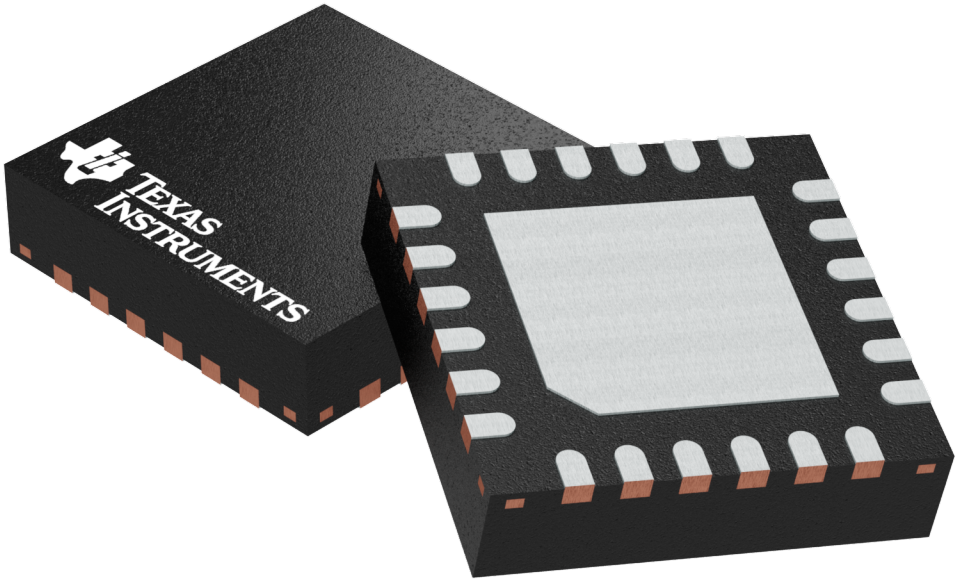

Images above are just a representation of the package family, actual package may vary.
Refer to the product data sheet for package details.

PLASTIC QUAD FLATPACK- NO LEAD

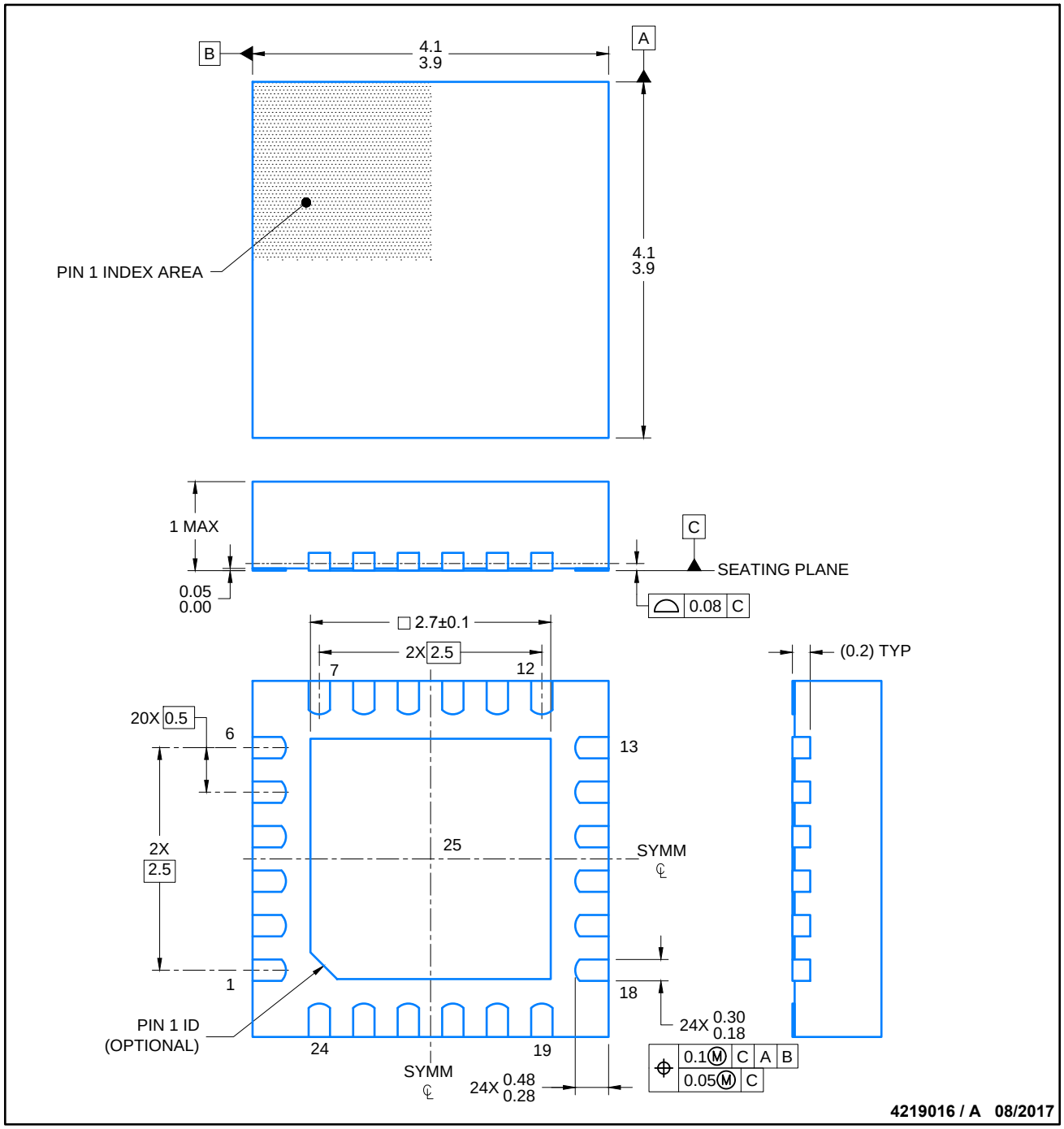

NOTES:

1. All linear dimensions are in millimeters. Any dimensions in parenthesis are for reference only. Dimensioning and tolerancing per ASME Y14.5M.
2. This drawing is subject to change without notice.
3. The package thermal pad must be soldered to the printed circuit board for thermal and mechanical performance.

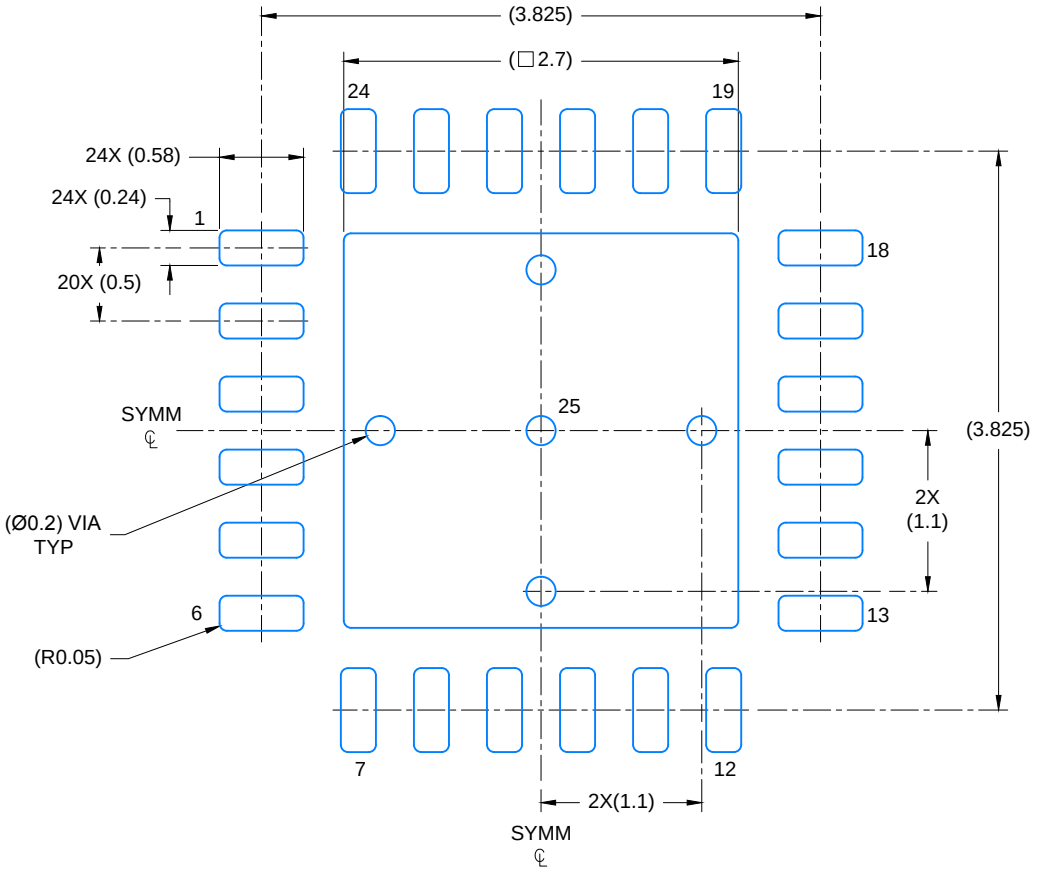

LAND PATTERN EXAMPLE

SCALE: 20X

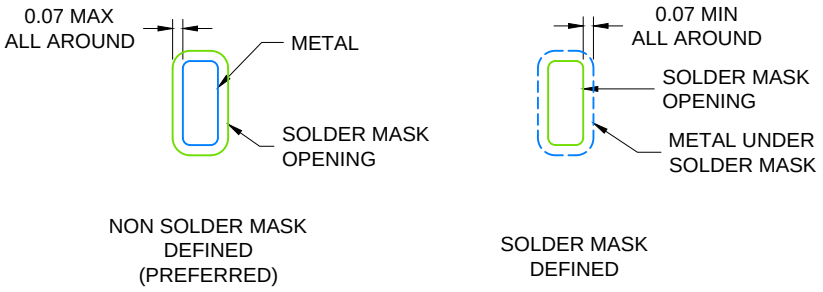

SOLDER MASK DETAILS

4219016 / A 08/2017

NOTES: (continued)

4. This package is designed to be soldered to a thermal pad on the board. For more information, see Texas Instruments literature number SLUA271 (www.ti.com/lit/slua271).
5. Solder mask tolerances between and around signal pads can vary based on board fabrication site.

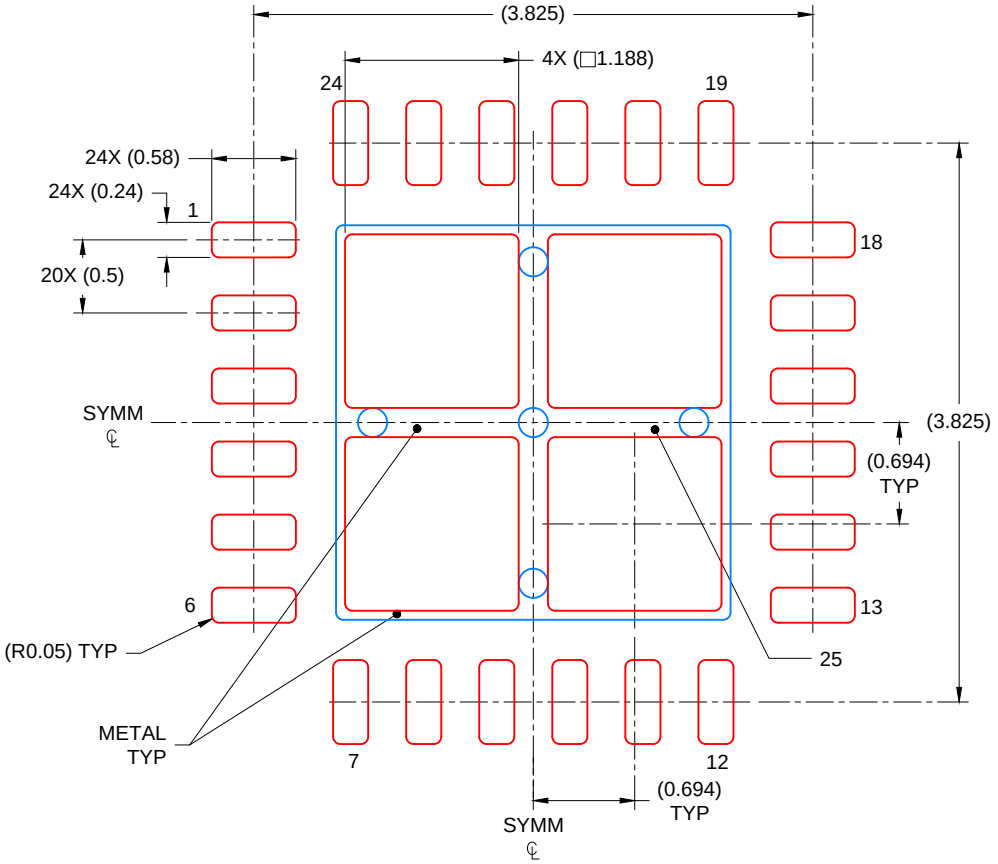

SOLDER PASTE EXAMPLE
BASED ON 0.125 mm THICK STENCIL

EXPOSED PAD
78% PRINTED COVERAGE BY AREA
SCALE: 20X

4219016 / A 08/2017

NOTES: (continued)

6. Laser cutting apertures with trapezoidal walls and rounded corners may offer better paste release. IPC-7525 may have alternate design recommendations..

IMPORTANT NOTICE AND DISCLAIMER

TI PROVIDES TECHNICAL AND RELIABILITY DATA (INCLUDING DATASHEETS), DESIGN RESOURCES (INCLUDING REFERENCE DESIGNS), APPLICATION OR OTHER DESIGN ADVICE, WEB TOOLS, SAFETY INFORMATION, AND OTHER RESOURCES “AS IS” AND WITH ALL FAULTS, AND DISCLAIMS ALL WARRANTIES, EXPRESS AND IMPLIED, INCLUDING WITHOUT LIMITATION ANY IMPLIED WARRANTIES OF MERCHANTABILITY, FITNESS FOR A PARTICULAR PURPOSE OR NON-INFRINGEMENT OF THIRD PARTY INTELLECTUAL PROPERTY RIGHTS.

These resources are intended for skilled developers designing with TI products. You are solely responsible for (1) selecting the appropriate TI products for your application, (2) designing, validating and testing your application, and (3) ensuring your application meets applicable standards, and any other safety, security, regulatory or other requirements.

These resources are subject to change without notice. TI grants you permission to use these resources only for development of an application that uses the TI products described in the resource. Other reproduction and display of these resources is prohibited. No license is granted to any other TI intellectual property right or to any third party intellectual property right. TI disclaims responsibility for, and you fully indemnify TI and its representatives against any claims, damages, costs, losses, and liabilities arising out of your use of these resources.

TI’s products are provided subject to TI’s Terms of Sale, TI’s General Quality Guidelines, or other applicable terms available either on ti.com or provided in conjunction with such TI products. TI’s provision of these resources does not expand or otherwise alter TI’s applicable warranties or warranty disclaimers for TI products. Unless TI explicitly designates a product as custom or customer-specified, TI products are standard, catalog, general purpose devices.

TI objects to and rejects any additional or different terms you may propose.

Copyright © 2026, Texas Instruments Incorporated

Last updated 10/2025