TDP2044 Four-Channel 20Gbps DisplayPort 2.1 Linear Redriver with Cross-Point for USB Type-C

1 Features

- Supports DisplayPort 2.1 up to 20Gbps (UHBR20)
- Designed for USB-C DP only (no USB 3.x) source or sink with integrated cross-point mux
- Protocol agnostic linear equalizer supporting most AC coupled interfaces up to 20Gbps
- Excellent electrical performance at 20Gbps (10GHz Nyquist):
  - 19dB equalization
  - 1.8V DC linearity, 1.08V AC linearity
  - –15 / –16dB Rx / Tx return loss
  - –60dB NEXT, –43dB FEXT cross talk
  - 70fs low additive RJ with PRBS data
- Transparent to DisplayPort 1.4 and 2.1 link training
- Single 3.3V supply with 160mW/chan active power
- Internal voltage regulator provides immunity to supply noise
- High linearity easing DP compliance ratio tests
- High BW resulting excellent linear EQ curves
- Pin-strap, I^2C or EEPROM programming
  - 18 EQ boost and 5 flat gain settings
- TDP2044: 0°C to 70°C commercial temperature
- TDP2044I: –40°C to 85°C industrial temperature
- 4mm × 6mm, 40 pin WQFN package

2 Applications

- Desktop PC or motherboard
- PC, notebooks, and tablets
- Docking stations
- TV, gaming, home theater, and entertainment
- Pro audio, video, and signage
- Test and measurement
- Medical
- Flat panel monitors

3 Description

The TDP2044 is a four-channel low-power high-performance linear repeater or redriver with integrated cross-point to support VESA USB Type-C™ Alt Mode applications designed to support DisplayPort 2.1 up to 20Gbps.

The TDP2044 receivers deploy continuous time linear equalizers (CTLE) to provide a programmable high-frequency boost. The equalizer can open an input eye that is completely closed due to inter-symbol interference (ISI) induced by an interconnect medium, such as PCB traces or cables. The linear data-paths of TDP2044 preserve transmit preset signal characteristics. High bandwidth, low channel-to-channel cross-talk, low additive jitter and excellent return loss makes the device almost a passive element in the link, but with useful equalization. The DisplayPort link training is effective through the linear redriver that becomes part of the passive channel in between source Tx and sink Rx. This transparency in the link training protocol results in optimum electrical link and lowest possible latency. The data-path of the device uses an internally regulated power rail that provides high immunity to any supply noise on the board.

The device also has low AC and DC gain variation providing consistent equalization in high volume platform deployment.

Package Information

PART NUMBER	PACKAGE(1)	PACKAGE SIZE(2)
TDP2044	RNQ (WQFN, 40)	4mm × 6mm

(1) For more information, see Section 10.
(2) The package size (length × width) is a nominal value and includes pins, where applicable.

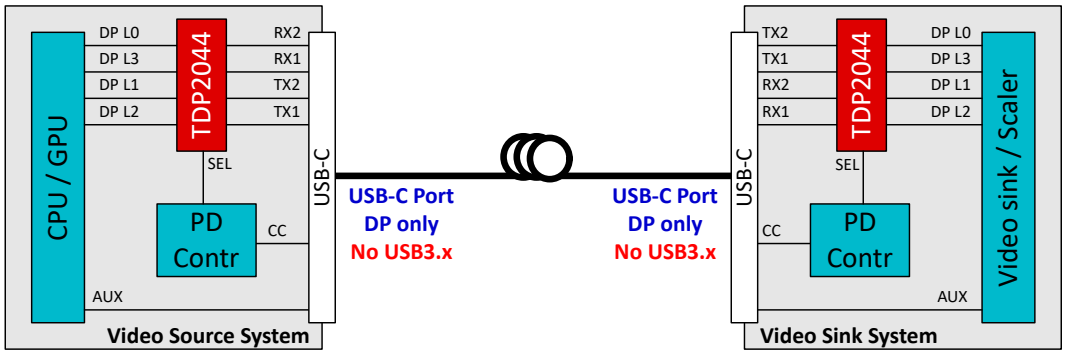

Typical Application

An IMPORTANT NOTICE at the end of this data sheet addresses availability, warranty, changes, use in safety-critical applications, intellectual property matters and other important disclaimers. PRODUCTION DATA.

Table of Contents

1 Features.....1
2 Applications.....1
3 Description.....1
4 Pin Configuration and Functions.....3
5 Specifications.....6
5.1 Absolute Maximum Ratings.....6
5.2 ESD Ratings.....6
5.3 Recommended Operating Conditions.....6
5.4 Thermal Information.....7
5.5 DC Electrical Characteristics.....7
5.6 High Speed Electrical Characteristics.....8
5.7 SMBUS/I^{2}C Timing Characteristics.....9
5.8 Typical Characteristics.....10
5.9 Typical Jitter Characteristics.....10
6 Detailed Description.....11
6.1 Overview.....11
6.2 Functional Block Diagram.....11
6.3 Feature Description.....11
6.4 Device Functional Modes.....13
6.5 Programming.....13
7 Application and Implementation.....17
7.1 Application Information.....17
7.2 Typical Applications.....17
7.3 Power Supply Recommendations.....20
7.4 Layout.....21
8 Device and Documentation Support.....22
8.1 Receiving Notification of Documentation Updates.....22
8.2 Support Resources.....22
8.3 Trademarks.....22
8.4 Electrostatic Discharge Caution.....22
8.5 Glossary.....22
9 Revision History.....22
10 Mechanical, Packaging, and Orderable Information.....22

Copyright © 2024 Texas Instruments Incorporated

4 Pin Configuration and Functions

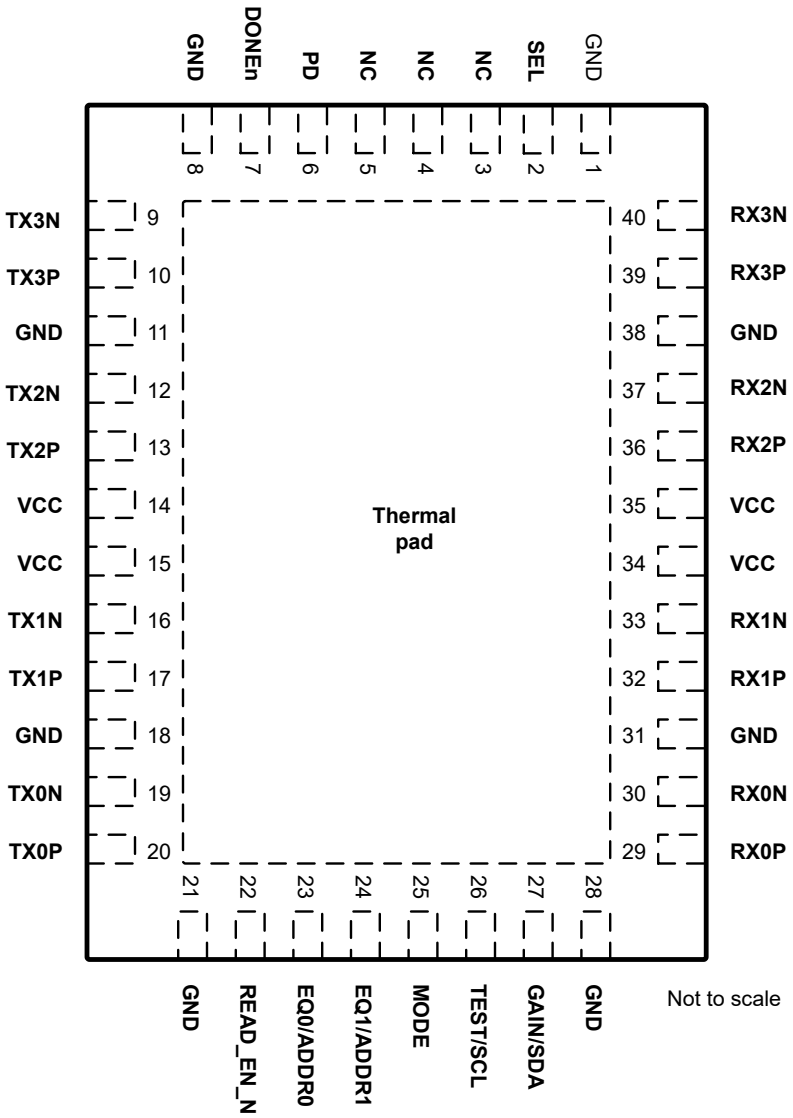

Figure 4-1. RNQ Package, 40-Pin WQFN (Top View)

Table 4-1. Pin Functions

PIN		TYPE[(1)]	DESCRIPTION
NAME	NO.		
DONEn	7	O, 3.3V open drain	In **SMBus/I²C Primary mode**: Indicates the completion of a valid EEPROM register load operation. External pullup resistor such as 4.7kΩ required for operation. High: External EEPROM load failed or incomplete Low: External EEPROM load successful and complete In **SMBus/I²C Secondary/Pin mode**: This output is High-Z. The pin can be left floating.

Table 4-1. Pin Functions (continued)

PIN		TYPE[(1)]	DESCRIPTION
NAME	NO.		
MODE	25	I, 5-level	Sets device control configuration modes. 5-level IO pin as provided in Table 6-3. The pin can be exercised at device power up or in normal operation mode. L0: **Pin mode** – device control configuration is done solely by strap pins. L1: **SMBus/I^{2}C Primary mode** – device control configuration is read from external EEPROM. When the TDP2044 finishes reading from the EEPROM successfully, DONEn pin is pulled LOW. SMBus/I^{2}C secondary operation is available in this mode before, during or after EEPROM reading. Note: during EEPROM reading if the external SMBus/I^{2}C primary wants to access TDP2044 registers, the external controller must support arbitration. L2: **SMBus/I^{2}C Secondary mode** – device control configuration is done by an external controller with SMBus/I^{2}C primary. L3 and L4 (Float): RESERVED – TI internal test modes.
EQ0 / ADDR0	23	I, 5-level	In **Pin mode:** Sets receiver linear equalization (CTLE) boost for channels 0-3 as provided in Table 6-1. These pins are sampled at device power up only. In **SMBus/I^{2}C mode:** Sets SMBus / I^{2}C secondary address as provided in Table 6-4. These pins are sampled at device power up only.
EQ1 / ADDR1	24	I, 5-level	
GAIN / SDA	27	I, 5-level / I/O, 3.3V LVCMOS, open drain	In **Pin mode:** Flat gain (DC and AC) from the input to the output of the device for channels 0-3. The pin is sampled at device power up only. In **SMBus/I^{2}C mode:** 3.3V SMBus/I^{2}C data. External 1kΩ to 5kΩ pullup resistor is required as per SMBus / I^{2}C interface standard.
GND	1, 8, 11, 18, 21, 28, 31, 38, EP	P	Ground reference for the device. EP: the Exposed Pad at the bottom of the QFN package, which is used as the GND return for the device. The EP must be connected to one or more ground planes through the low resistance path. A via array provides a low impedance path to GND. The EP also improves thermal dissipation.
PD	6	I, 3.3V LVCMOS	2-level logic controlling the operating state of the redriver. Active in all device control modes. The pin has internal 1MΩ weak pulldown resistor. High: power down for channels 0-3 Low: power up, normal operation for channels 0-3
READ_EN_N	22	I, 3.3V LVCMOS	In **SMBus/I^{2}C Primary mode**: After power up, when the pin is low, the device initiates the SMBus / I^{2}C Primary mode EEPROM read function. When EEPROM read is complete (indicated by assertion of DONEn low), this pin can be held low for normal device operation. During the EEPROM load process the signal path of the device is disabled. In **SMBus/I^{2}C Secondary and Pin modes:** In these modes the pin is not used. The pin can be left floating. The pin has internal 1MΩ weak pulldown resistor.
SEL	2	I, 3.3V LVCMOS	The pin selects the mux configuration. L: straight data path – RX[0/1/2/3][P/N] connected to TX[0/1/2/3][P/N] through the redriver. H: cross data path – RX[0/1/2/3][P/N] connected to TX[1/0/3/2][P/N] through the redriver. Active in all device control modes. 59kΩ internal pulldown.
TEST / SCL	26	I, 5-level / I/O, 3.3V LVCMOS, open drain	In **Pin mode:** TI test mode. External 1kΩ pulldown resistor must be installed. In **SMBus/I^{2}C mode:** 3.3V SMBus/I^{2}C clock. External 1kΩ to 5kΩ pullup resistor is required as per SMBus / I^{2}C interface standard.
RX0N	30	I	Inverting differential inputs to the equalizer. Integrated 50Ω termination resistor from the pin to internal CM bias voltage. Channel 0.
RX0P	29	I	Noninverting differential inputs to the equalizer. Integrated 50Ω termination resistor from the pin to internal CM bias voltage. Channel 0.
RX1N	33	I	Inverting differential inputs to the equalizer. Integrated 50Ω termination resistor from the pin to internal CM bias voltage. Channel 1.

Copyright © 2024 Texas Instruments Incorporated

Table 4-1. Pin Functions (continued)

PIN		TYPE[(1)]	DESCRIPTION
NAME	NO.		
RX1P	32	I	Noninverting differential inputs to the equalizer. Integrated 50Ω termination resistor from the pin to internal CM bias voltage. Channel 1.
RX2N	37	I	Inverting differential inputs to the equalizer. Integrated 50Ω termination resistor from the pin to internal CM bias voltage. Channel 2.
RX2P	36	I	Noninverting differential inputs to the equalizer. Integrated 50Ω termination resistor from the pin to internal CM bias voltage. Channel 2.
RX3N	40	I	Inverting differential inputs to the equalizer. Integrated 50Ω termination resistor from the pin to internal CM bias voltage. Channel 3.
RX3P	39	I	Noninverting differential inputs to the equalizer. Integrated 50Ω termination resistor from the pin to internal CM bias voltage. Channel 3.
TX0N	19	O	Inverting pin for 100Ω differential driver output. Channel 0.
TX0P	20	O	Noninverting pin for 100Ω differential driver output. Channel 0.
TX1N	16	O	Inverting pin for 100Ω differential driver output. Channel 1.
TX1P	17	O	Noninverting pin for 100Ω differential driver output. Channel 1.
TX2N	12	O	Inverting pin for 100Ω differential driver output. Channel 2.
TX2P	13	O	Noninverting pin for 100Ω differential driver output. Channel 2.
TX3N	9	O	Inverting pin for 100Ω differential driver output. Channel 3.
TX3P	10	O	Noninverting pin for 100Ω differential driver output. Channel 3.
VCC	14, 15, 34, 35	P	Power supply pins. VCC = 3.3V ±10%. The VCC pins on this device must be connected through a low-resistance path to the board VCC plane. Install a decoupling capacitor to GND near each VCC pin.

(1) I = input, O = output, P = power

Copyright © 2024 Texas Instruments Incorporated

5 Specifications

5.1 Absolute Maximum Ratings

over operating free-air temperature range (unless otherwise noted)[1]

		MIN	MAX	UNIT
VCC_{ABSMAX}	Supply voltage (VCC)	–0.5	4.0	V
$VIO_{CMOS,ABSMAX}$	3.3V LVCMOS and open drain I/O voltage	–0.5	4.0	V
$VIO_{5LVL,ABSMAX}$	5-level input I/O voltage	–0.5	2.75	V
$VIO_{HS-RX,ABSMAX}$	High-speed I/O voltage (RXnP, RXnN)	–0.5	3.2	V
$VIO_{HS-TX,ABSMAX}$	High-speed I/O voltage (TXnP, TXnN)	–0.5	2.75	V
$T_{J,ABSMAX}$	Junction temperature		150	°C
T_{stg}	Storage temperature range	–65	150	°C

(1) Operation outside the Absolute Maximum Ratings may cause permanent device damage. Absolute maximum ratings do not imply functional operation of the device at these or any other conditions beyond those listed under Recommended Operating Conditions. If briefly operating outside the Recommended Operating Conditions but within the Absolute Maximum Ratings, the device may not sustain damage, but it may not be fully functional. Operating the device in this manner may affect device reliability, functionality, performance, and shorten the device lifetime.

5.2 ESD Ratings

			VALUE	UNIT
$V_{(ESD)}$	Electrostatic discharge	Human body model (HBM), per ANSI/ESDA/JEDEC JS-001[1]	±2000	V
		Charged device model (CDM), per ANSI/ESDA/JEDEC JS-002[2]	±500	

(1) JEDEC document JEP155 states that 500V HBM allows safe manufacturing with a standard ESD control process. Pins listed as ±2kV may actually have higher performance.
(2) JEDEC document JEP157 states that 250V CDM allows safe manufacturing with a standard ESD control process.

5.3 Recommended Operating Conditions

over operating free-air temperature range (unless otherwise noted)

			MIN	NOM	MAX	UNIT
VCC	Supply voltage, VCC to GND	DC plus AC power must not exceed these limits	3.0	3.3	3.6	V
N_{VCC} [1]	Supply noise tolerance	DC to <50Hz, sinusoidal			250	mVpp
		50Hz to 500kHz, sinusoidal			100	mVpp
		500kHz to 2.5MHz, sinusoidal			33	mVpp
		Supply noise, >2.5MHz, sinusoidal			10	mVpp
$T_{RampVCC}$	VCC supply ramp time	From 0V to 3.0V	0.150		100	ms
T_A	Operating ambient temperature	TDP2044	0		70	°C
		TDP2044I	–40		85	°C
T_J	Operating junction temperature	TDP2044			105	°C
		TDP2044I			125	°C
PW_{LVCMOS}	Minimum pulse width required for the device to detect a valid signal on LVCMOS inputs	PD, SEL, and READ_EN_N	200			µs
VCC_{SMBUS}	SMBus/I^2C SDA and SCL open-drain termination voltage	Supply voltage for open-drain pullup resistor			3.6	V
F_{SMBus}	SMBus/I^2C clock (SCL) frequency	SMBus secondary mode	10		400	kHz
VID_{LAUNCH}	Source launch amplitude	Differential signaling			1200	mVpp

Copyright © 2024 Texas Instruments Incorporated

over operating free-air temperature range (unless otherwise noted)

			MIN	NOM	MAX	UNIT
DR	Data rate		1		20	Gbps

(1) Sinusoidal noise is superimposed to supply voltage with negligible impact to device function or critical performance shown in the Electrical Table. Steps must be taken to ensure the combined AC plus DC supply noise meets the specified VDD supply voltage limits.

5.4 Thermal Information

THERMAL METRIC[1]		TDP2044 RNQ, 40 Pins	UNIT
$R_{\theta JA\text{-High K}}$	Junction-to-ambient thermal resistance	30.7	°C/W
$R_{\theta JC(top)}$	Junction-to-case (top) thermal resistance	20.8	°C/W
$R_{\theta JB}$	Junction-to-board thermal resistance	11.4	°C/W
ψ_{JT}	Junction-to-top characterization parameter	0.3	°C/W
ψ_{JB}	Junction-to-board characterization parameter	11.4	°C/W
$R_{\theta JC(bot)}$	Junction-to-case (bottom) thermal resistance	3.8	°C/W

(1) For more information about traditional and new thermal metrics, see the *Semiconductor and IC Package Thermal Metrics* application note.

5.5 DC Electrical Characteristics

over operating free-air temperature and voltage range (unless otherwise noted)

PARAMETER		TEST CONDITIONS	MIN	TYP	MAX	UNIT
Power						
P_{ACT}	Device active power	4 channels active, EQ = 0-2		0.57	0.71	W
		4 channels active, EQ = 5-19		0.69	0.85	W
P_{STBY}	Device power consumption in standby power mode	All channels disabled (PD = H)		17	25	mW
Control IO						
V_{IH}	High level input voltage	SDA, SCL, PD, READ_EN_N, SEL pins	2.1			V
V_{IL}	Low level input voltage	SDA, SCL, PD, READ_EN_N, SEL pins			1.08	V
V_{OH}	High level output voltage	R_{pullup} = 4.7kΩ (SDA, SCL, DONEn pins)	2.1			V
V_{OL}	Low level output voltage	I_{OL} = –4mA (SDA, SCL, DONEn pins)			0.4	V
I_{IH}	Input high leakage current	V_{Input} = VCC, (SCL, SDA, PD, READ_EN_N pins)			10	µA
I_{IL}	Input low leakage current	V_{Input} = 0V, (SCL, SDA, PD, READ_EN_N, SEL pins)	–10			µA
$I_{IH,FS}$	Input high leakage current for fail safe input pins	V_{Input} = 3.6V, VCC = 0V, (SCL, SDA, PD, READ_EN_N, SEL pins)			200	µA
$C_{IN\text{-}CTRL}$	Input capacitance	SDA, SCL, PD, READ_EN_N, SEL pins		1.6		pF
5 Level IOs (MODE, GAIN, EQ0, EQ1 pins)						
I_{IH_5L}	Input high leakage current, 5-level IOs	VIN = 2.5V			10	µA
I_{IL_5L}	Input low leakage current for all 5-level IOs except MODE.	VIN = GND	–10			µA
$I_{IL_5L,MODE}$	Input low leakage current for MODE pin	VIN = GND	–200			µA
Receiver						
$V_{RX\text{-}DC\text{-}CM}$	RX DC common vode voltage	Device is in active or standby state		1.4		V

over operating free-air temperature and voltage range (unless otherwise noted)

PARAMETER		TEST CONDITIONS	MIN	TYP	MAX	UNIT
Z_{RX-DC}	Rx DC single-ended impedance			50		Ω
Transmitter						
$Z_{TX-DIFF-DC}$	DC differential Tx impedance	Impedance of Tx during active signaling, VID,diff = 1Vpp		100		Ω
$V_{TX-DC-CM}$	Tx DC common mode voltage			1.0		V
$I_{TX-SHORT}$	Tx short circuit current	Total current the Tx can supply when shorted to GND		70		mA

5.6 High Speed Electrical Characteristics

over operating free-air temperature and voltage range (unless otherwise noted)

PARAMETER		TEST CONDITIONS	MIN	TYP	MAX	UNIT
Receiver						
$RL_{RX-DIFF}$	Input differential return loss	3GHz		–19		dB
		4GHz		–18		dB
		5GHz		–18		dB
		6GHz		–17		dB
		10GHz		–15		dB
XT_{RX}	Receiver-side pair-to-pair isolation; Port A or Port B	Minimum over 10MHz to 10GHz range		–60		dB
Transmitter						
$RL_{TX-DIFF}$	Output differential return loss	3GHz		–19		dB
$RL_{TX-DIFF}$	Output differential return loss	4.0GHz		–18		dB
$RL_{TX-DIFF}$	Output differential return loss	5.0GHz		–18		dB
$RL_{TX-DIFF}$	Output differential return loss	6.0GHz		–17		dB
$RL_{TX-DIFF}$	Output differential return loss	10GHz		–16		dB
XT_{TX}	Transmit-side pair-to-pair isolation	Minimum over 10MHz to 10GHz range		–60		dB
Device Datapath						
$T_{PLHD/PHLD}$	Input-to-output latency (propagation delay) through a data channel	For either low-to-high or high-to-low transition.		100	130	ps
$L_{TX-SKEW}$	Lane-to-lane output skew	Between any two lanes within a single transmitter.			20	ps
$T_{RJ-DATA}$	Additive random jitter with data	Jitter through redriver minus the calibration trace. 20Gbps PRBS15. 800mVpp-diff input swing		70		fs
XT	Channel to channel xtalk (between adjacent active channels, FEXT	Minimum over 10MHz to 10Ghz range, normalized to EQ gain of 0dB		–43		dB
FLAT-GAIN	Broadband DC and AC flat gain - input to output, measured at DC	Minimum EQ, GAIN = L0		–5.6		dB
		Minimum EQ, GAIN = L1		–3.8		dB
		Minimum EQ, GAIN = L2		–1.2		dB
		Minimum EQ, GAIN = L3		2.6		dB
		Minimum EQ, GAIN = L4 (Float)		0.6		dB
$EQ\text{-}MAX_{10G}$	EQ boost at max setting (EQ INDEX = 19)	AC gain at 10GHz relative to gain at 100MHz.		19		dB
LINEARITY-DC	Output DC linearity	at GAIN = L4		1750		mVpp
LINEARITY-AC	Output AC linearity	at 10Gbps, with GAIN = L4		1100		mVpp
		at 20Gbps, with GAIN = L4		1080		mVpp

Copyright © 2024 Texas Instruments Incorporated

5.7 SMBUS/I²C Timing Characteristics

over operating free-air temperature range (unless otherwise noted)

PARAMETER		TEST CONDITIONS	MIN	TYP	MAX	UNIT
Secondary Mode						
t_{SP}	Pulse width of spikes which must be suppressed by the input filter				50	ns
t_{HD-STA}	Hold time (repeated) START condition. After this period, the first clock pulse is generated		0.6			µs
t_{LOW}	LOW period of the SCL clock		1.3			µs
T_{HIGH}	HIGH period of the SCL clock		0.6			µs
t_{SU-STA}	Setup time for a repeated START condition		0.6			µs
t_{HD-DAT}	Data hold time		0			µs
T_{SU-DAT}	Data setup time		0.1			µs
t_r	Rise time of both SDA and SCL signals	Pullup resistor = 4.7kΩ, Cb = 10pF		120		ns
t_f	Fall time of both SDA and SCL signals	Pullup resistor = 4.7kΩ, Cb = 10pF		2		ns
t_{SU-STO}	Setup time for STOP condition		0.6			µs
t_{BUF}	Bus free time between a STOP and START condition		1.3			µs
t_{VD-DAT}	Data valid time				0.9	µs
t_{VD-ACK}	Data valid acknowledge time				0.9	µs
C_b	Capacitive load for each bus line				400	pF
Primary Mode						
f_{SCL-M}	SCL clock frequency			303		kHz
t_{LOW-M}	SCL low period			1.90		µs
T_{HIGH-M}	SCL high period			1.40		µs
$t_{SU-STA-M}$	Setup time for a repeated START condition			2		µs
$t_{HD-STA-M}$	Hold time (repeated) START condition. After this period, the first clock pulse is generated			1.5		µs
$T_{SU-DAT-M}$	Data setup time			1.4		µs
$t_{HD-DAT-M}$	Data hold time			0.5		µs
t_{R-M}	Rise time of both SDA and SCL signals	Pullup resistor = 4.7kΩ, Cb = 10pF		120		ns
T_{F-M}	Fall time of both SDA and SCL signals	Pullup resistor = 4.7kΩ, Cb = 10pF		2		ns
$t_{SU-STO-M}$	Stop condition setup time			1.5		µs
EEPROM Timing						
T_{EEPROM}	EEPROM configuration load time	Time to assert DONEn after READ_EN_N has been asserted.		7.5		ms
T_{POR}	Time to first SMBus access	Power supply stable after initial ramp. Includes initial power-on reset time.		50		ms

Copyright © 2024 Texas Instruments Incorporated

5.8 Typical Characteristics

Figure 5-1 shows typical EQ gain curves versus frequency for different EQ settings. Figure 5-2 shows typical differential return loss for Rx and Tx pins.

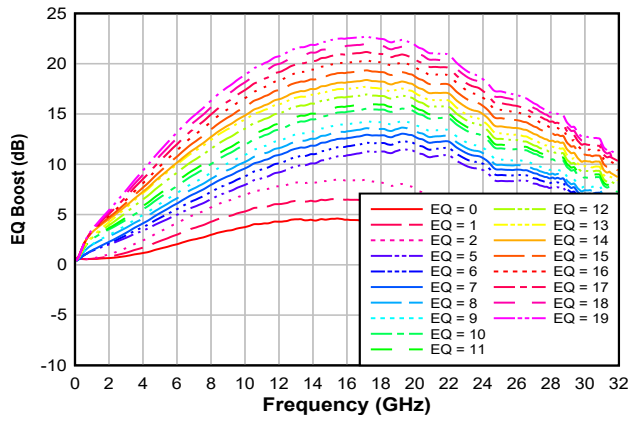

Figure 5-1. Typical EQ Boost vs Frequency

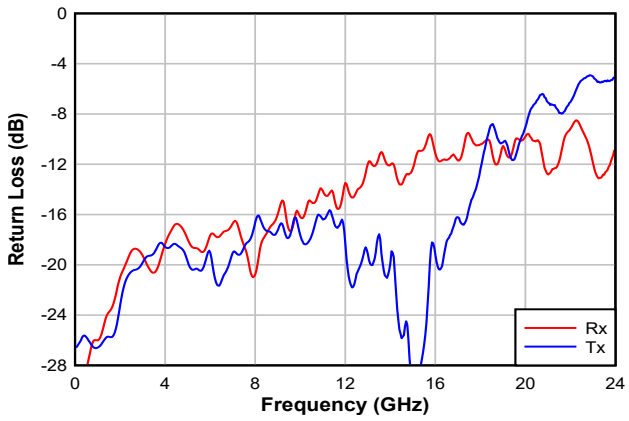

Figure 5-2. Typical Differential Return Loss

5.9 Typical Jitter Characteristics

Figure 5-3 and Figure 5-4 show eye diagrams at 20Gbps that compare jitter through calibration traces (left), and jitter through TDP2044 (right) at TI evaluation boards with minimal channels. The eye diagrams illustrate that TDP2044 adds very little random jitter (RJ).

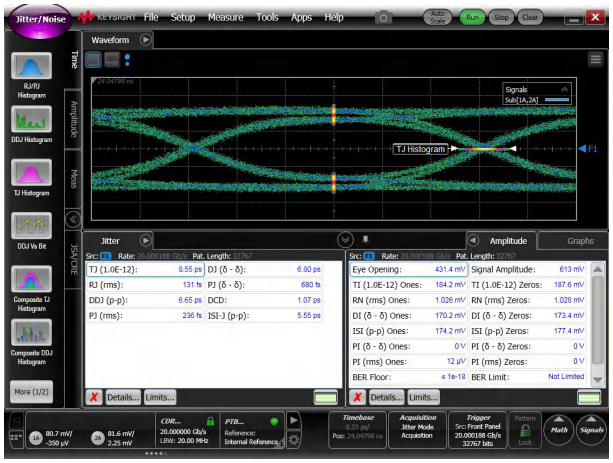

Figure 5-3. Through Baseline Calibration Trace Setup for 20Gbps

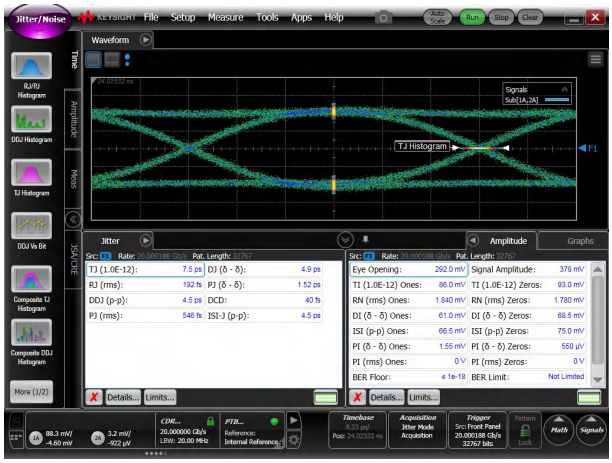

Figure 5-4. Through TDP2044 for 20Gbps

Copyright © 2024 Texas Instruments Incorporated

6 Detailed Description

6.1 Overview

The TDP2044 is a four-channel multi-rate linear repeater with integrated signal conditioning. The signal channels of the device operate independently from one another. Each channel includes a continuous-time linear equalizer (CTLE) and a linear output driver, which together compensate for a lossy transmission channel between the source transmitter and the final receiver. The linearity of the data path is specifically designed to preserve any transmit equalization while keeping receiver equalization effective.

The TDP2044 can be configured three different ways:

Pin mode – device control configuration is done solely by strap pins. Pin mode is expected to be satisfactory `for many system implementation needs.

SMBus/I^{2}C Primary mode – device control configuration is read from external EEPROM. When the TDP2044 has finished reading from the EEPROM successfully, the device drives the DONEn pin LOW. SMBus/I^{2}C secondary operation is available in this mode before, during, or after EEPROM reading. Note: during EEPROM reading, if the external SMBus/I^{2}C primary wants to access TDP2044 registers, the external controller must support arbitration. The mode is preferred when software implementation is not desired.

SMBus/I^{2}C Secondary mode – provides most flexibility. Requires a SMBus/I^{2}C primary device to configure TDP2044 though writing to the secondary address.

6.2 Functional Block Diagram

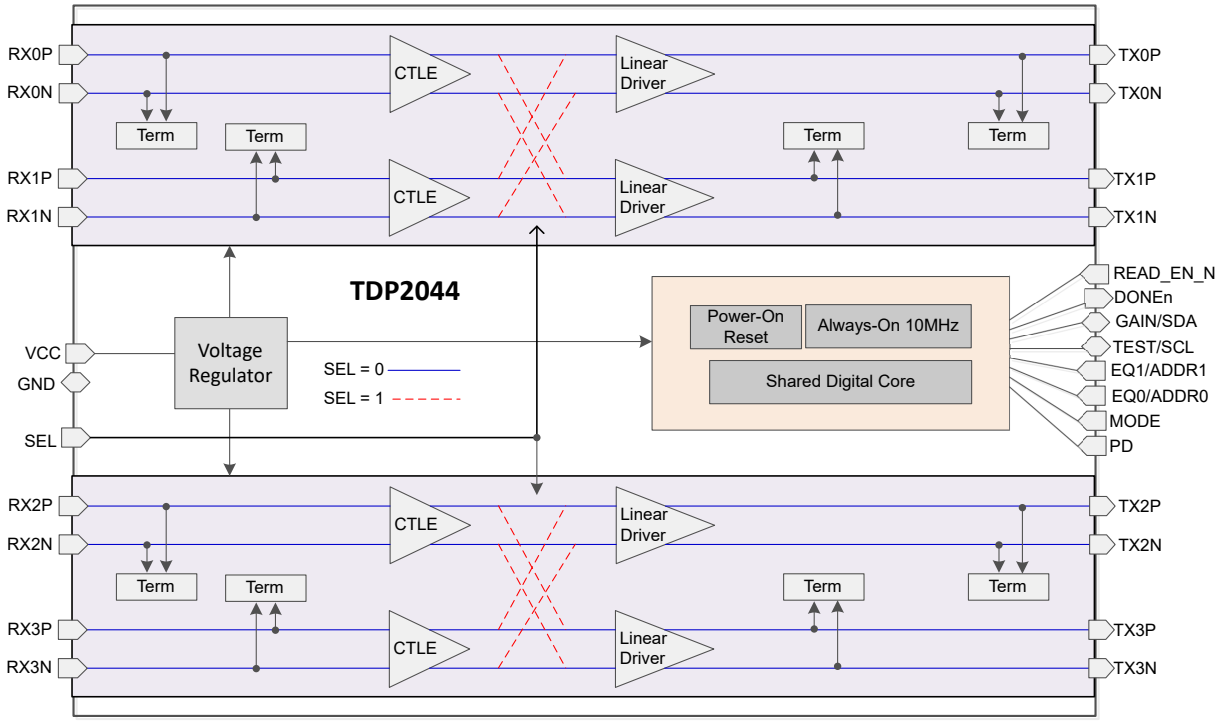

6.3 Feature Description

6.3.1 Linear Equalization

The TDP2044 receivers feature a continuous-time linear equalizer (CTLE) that applies high-frequency boost and low-frequency attenuation to help equalize the frequency-dependent insertion loss effects of the passive channel. The receivers implement two stage linear equalizer for wide range of equalization capability. The equalizer stages also provide flexibility to make subtle modifications of mid-frequency boost for best EQ gain profile match with wide range of channel media characteristics. The EQ profile control feature is only available in SMBus/I^{2}C mode. In Pin mode the settings are optimized for FR4 traces.

Copyright © 2024 Texas Instruments Incorporated

Table 6-1 provides available equalization boost at 20Gbps (10GHz Nyquist frequency) through EQ control pins or SMBus/I^{2}C registers. In Pin Control mode EQ1 and EQ0 pins set equalization boost for channels 0-3. In I^{2}C mode individual channels can be independently programmed for EQ boost. If the TDP2044 is used for other data rates equalization gain can be extracted from Figure 5-1.

Table 6-1. Equalization Control Settings

EQUALIZATION SETTING							TYPICAL EQ BOOST (dB)
EQ INDEX	Pin mode		SMBus/I^{2}C Mode				at 10GHz
	EQ1	EQ0	eq_stage1_3:0	eq_stage2_2:0	eq_profile_3:0	eq_stage1_bypass	
0	L0	L0	0	0	0	1	4.0
1	L0	L1	1	0	0	1	5.0
2	L0	L2	3	0	0	1	7.0
5	L1	L0	0	0	1	0	8.0
6	L1	L1	1	0	1	0	9.0
7	L1	L2	2	0	1	0	9.5
8	L1	L3	3	0	3	0	10.0
9	L1	L4	4	0	3	0	11.0
10	L2	L0	5	1	7	0	12.0
11	L2	L1	6	1	7	0	12.5
12	L2	L2	8	1	7	0	13.5
13	L2	L3	10	1	7	0	14.5
14	L2	L4	10	2	15	0	15.0
15	L3	L0	11	3	15	0	15.5
16	L3	L1	12	4	15	0	16.5
17	L3	L2	13	5	15	0	17.0
18	L3	L3	14	6	15	0	18.0
19	L3	L4	15	7	15	0	19.0

6.3.2 Flat-Gain

The GAIN pin can be used to set the overall data-path flat gain (DC and AC) of the TDP2044 when the device is in Pin mode. The pin GAIN sets the Flat-Gain for channels 0-3. In I^{2}C mode each channel can be independently set. Table 6-2 provides flat gain control configuration settings. For most systems the default setting of GAIN = L4 (float) is recommended that provides flat gain of 0dB.

The flat-gain and equalization of the TDP2044 must be set such that the output signal swing at DC and high frequency does not exceed the DC and AC linearity ranges of the devices, respectively.

Table 6-2. Flat Gain Configuration Settings

Pin mode GAIN	I^{2}C Modeflat_gain_2:0	Flat Gain
L0	0	–5.6dB
L1	1	–3.8dB
L2	3	–1.2dB
L4 (float)	5	0.6dB (default recommendation)
L3	7	+2.6dB

Copyright © 2024 Texas Instruments Incorporated

6.4 Device Functional Modes

6.4.1 Active Mode

The device is in normal operation. In this mode, the TDP2044 redrives and equalizes video mainlink signals to provide better signal integrity.

6.4.2 Standby Mode

The device is in standby mode invoked by PD = H. In this mode, the device is in standby mode conserving power.

6.5 Programming

6.5.1 Pin mode

The TDP2044 can be fully configured through pin-strap pins. In this mode the device uses 2-level and 5-level pins for device control and signal integrity optimum settings.

6.5.1.1 Five-Level Control Inputs

The TDP2044 has four (EQ0, EQ1, GAIN, and MODE) 5-level input pins that are used to control the configuration of the device. These 5-level inputs use a resistor divider to help set the 5 valid levels and provide a wider range of control settings. External resistors must be of 10% tolerance or better. The 5-level pins except MODE are sampled at powerup only. The MODE pin can be exercised at device power up or in normal operation mode.

Table 6-3. 5-Level Control Pin Settings

LEVEL	SETTING
L0	1kΩ to GND
L1	8.25kΩ to GND
L2	24.9kΩ to GND
L3	75kΩ to GND
L4	F (Float)

6.5.2 SMBUS/I^{2}C Register Control Interface

If MODE = L2 (SMBus/I^{2}C Secondary control mode), then the TDP2044 is configured through a standard I^{2}C or SMBus interface that can operate up to 400kHz. The secondary address of the TDP2044 is determined by the pin strap settings on the ADDR1 and ADDR0 pins. The sixteen possible secondary addresses for channels 0-3 are provided in Table 6-4. In SMBus/I^{2}C modes the SCL and SDA pins must be pulled up to a 3.3V supply with a pullup resistor. The value of the resistor depends on total bus capacitance. 4.7kΩ is a good first approximation for a bus capacitance of 10pF.

Table 6-4. SMBUS/I^{2}C Secondary Address Settings

ADDR1	ADDR0	7-bit Secondary Address Channels 0-3
L0	L0	0x18
L0	L1	0x1A
L0	L2	0x1C
L0	L3	0x1E
L0	L4	Reserved
L1	L0	0x20
L1	L1	0x22
L1	L2	0x24
L1	L3	0x26
L1	L4	Reserved
L2	L0	0x28
L2	L1	0x2A

Copyright © 2024 Texas Instruments Incorporated

Table 6-4. SMBUS/I²C Secondary Address Settings (continued)

ADDR1	ADDR0	7-bit Secondary Address Channels 0-3
L2	L2	0x2C
L2	L3	0x2E
L2	L4	Reserved
L3	L0	0x30
L3	L1	0x32
L3	L2	0x34
L3	L3	0x36
L3	L4	Reserved

The TDP2044 has two types of registers:

- **Shared Registers:** these registers can be accessed at any time and are used for device-level configuration, status read back, control, or to read back the device ID information.
- **Channel Registers:** these registers are used to control and configure specific features for each individual channel. All channels have the same register set and can be configured independent of each other or configured as a group through broadcast writes to Channels 0-3.

Table 6-5. Channel Register Access

Channel Registers Base Address	Channel 0-3 Access
0x00	Channel 0 registers
0x20	Channel 1 registers
0x40	Channel 2 registers
0x60	Channel 3 registers
0x80	Broadcast write channel 0-3 registers, read channel 0 registers
0xA0	Broadcast write channel 0-1 registers, read channel 0 registers
0xC0	Broadcast write channel 2-3 registers, read channel 2 registers
0xE0	Channel 0-3 share registers

6.5.2.1 Shared Registers

Table 6-6. General Registers (Offset = 0xE2)

Bit	Field	Type	Reset	Description
7	RESERVED	R	0x0	Reserved
6	rst_i2c_regs	R/W/SC	0x0	Device reset control: Reset all I²C registers to default values (self-clearing).
5	rst_i2c_mas	R/W/SC	0x0	Reset I²C Primary (self-clearing).
4-1	RESERVED	R	0x0	Reserved
0	frc_eeprm_rd	R/W/SC	0x0	Override MODE and READ_EN_N status to force manual EEPROM configuration load.

Table 6-7. EEPROM_Status Register (Offset = 0xE3)

Bit	Field	Type	Reset	Description
7	eecfg_cmplt	R	0x0	EEPROM load complete.
6	eecfg_fail	R	0x0	EEPROM load failed.
5	eecfg_atmpt_1	R	0x0	Number of attempts made to load EEPROM image.
4	eecfg_atmpt_0	R	0x0	
3	eecfg_cmplt	R	0x0	EEPROM load complete 2.
2	eecfg_fail	R	0x0	EEPROM load failed 2.

Copyright © 2024 Texas Instruments Incorporated

Table 6-7. EEPROM_Status Register (Offset = 0xE3) (continued)

Bit	Field	Type	Reset	Description
1	eecfg_atmpt_1	R	0x0	Number of attempts made to load EEPROM image 2.
0	eecfg_atmpt_0	R	0x0	

Table 6-8. DEVICE_ID0 Register (Offset = 0xF0)

Bit	Field	Type	Reset	Description
7-4	RESERVED	R	0x0	Reserved
3	device_id0_3	R	0x0	Device ID0 [3:1]: 011
2	device_id0_2	R	0x1	
1	device_id0_1	R	0x1	
0	RESERVED	R	X	Reserved

Table 6-9. *DEVICE_ID1 Register (Offset = 0xF1)*

Bit	Field	Type	Reset	Description
7	device_id[7]	R	0x0	Device ID 0010 1001: TDP2044
6	device_id[6]	R	0x0	
5	device_id[5]	R	0x1	
4	device_id[4]	R	0x0	
3	device_id[3]	R	0x1	
2	device_id[2]	R	0x0	
1	device_id[1]	R	0x0	
0	device_id[0]	R	0x0	

6.5.2.2 Channel Registers

Table 6-10. EQ Gain Control Register (Channel register base + Offset = 0x01)

Bit	Field	Type	Reset	Description
7	eq_stage1_bypass	R/W	0x0	Enable EQ stage 1 bypass: 0: Bypass disabled 1: Bypass enabled
6	eq_stage1_3	R/W	0x0	EQBoost stage 1 control See Table 6-1 for details
5	eq_stage1_2	R/W	0x0	
4	eq_stage1_1	R/W	0x0	
3	eq_stage1_0	R/W	0x0	
2	eq_stage2_2	R/W	0x0	EQ Boost stage 2 control See Table 6-1 for details
1	eq_stage2_1	R/W	0x0	
0	eq_stage2_0	R/W	0x0	

Table 6-11. EQ Gain / Flat Gain Control Register (Channel register base + Offset = 0x03)

Bit	Field	Type	Reset	Description
7	RESERVED	R	0x0	Reserved
6	eq_profile_3	R/W	0x0	EQ mid-frequency boost profile See Table 6-1 for details
5	eq_profile_2	R/W	0x0	
4	eq_profile_1	R/W	0x0	
3	eq_profile_0	R/W	0x0	
2	flat_gain_2	R/W	0x1	Flat gain select: See Table 6-2 for details
1	flat_gain_1	R/W	0x0	
0	flat_gain_0	R/W	0x1	

Copyright © 2024 Texas Instruments Incorporated

Table 6-12. TI Test Mode Control Register (Channel register base + Offset = 0x04)

Bit	Field	Type	Reset	Description
7-3, 1-0	RESERVED	R	0x0	Reserved
2	TI test mode	R/W	0x0	Set TI test mode: 0: test mode is enabled 1: test mode is disabled. Must be set to "1" for normal operation.

Table 6-13. PD Override Register (Channel register base + Offset = 0x05)

Bit	Field	Type	Reset	Description
7	device_en_override	R/W	0x0	Enable power down overrides through SMBus/I^{2}C 0: Manual override disabled 1: Manual override enabled
6-0	device_en	R/W	0x111111	Manual power down of redriver various blocks of a channel – gated by device_en_override = 1 111111: All blocks in the channel are enabled 000000: All blocks in the channel are disabled

Table 6-14. Bias Register (Channel register base + Offset = 0x06)

Bit	Field	Type	Reset	Description
5-3	Bias current	R/W	0x100	Control bias current Set 001 for best performance
7,6,2-0	Reserved	R/W	0x00000	Reserved

6.5.3 SMBus/I^{2}C Primary Mode Configuration (EEPROM Self Load)

The TDP2044 can also be configured by reading from EEPROM. To enter into this mode MODE pin must be set to L1. The EEPROM load operation only happens once after the initial powerup of the device. If the TDP2044 is configured for SMBus Primary mode, the device remains in the SMBus IDLE state until the READ_EN_N pin is asserted to LOW. After the READ_EN_N pin is driven LOW, theTDP2044 becomes an SMBus primary and attempts to self-configure by reading the device settings stored in an external EEPROM (SMBus 8-bit address 0xA0). When the TDP2044 has finished reading from the EEPROM successfully, the device drives the DONEn pin LOW. SMBus/I^{2}C secondary operation is available in this mode before, during, or after EEPROM reading. Note: during EEPROM reading, if the external SMBus/I^{2}C primary wants to access TDP2044 registers, the external controller must support arbitration.

When designing a system for using the external EEPROM, the user must follow these specific guidelines:

- EEPROM size of 2Kb (256 × 8-bit) is recommended.
- Set MODE = L1, configure for SMBus Primary mode.
- The external EEPROM device address byte must be 0xA0 and capable of 400kHz operation at 3.3V supply
- In SMBus/I^{2}C modes the SCL and SDA pins must be pulled up to a 3.3V supply with a pullup resistor. The value of the resistor depends on total bus capacitance. 4.7kΩ is a good first approximation for a bus capacitance of 10pF.

Multiple TDP2044 can be cascaded to read from single EEPROM. Tie the READ_EN_N pin of the first device low (GND) to automatically initiate EEPROM read at power up. DONEn of the first device can be fed into READ_EN_N of the next device with 4.7kΩ pullup resistors. Leave the DONEn pin of the final device floating, or connect the pin to a microcontroller input to monitor the completion of the final EEPROM read.

Copyright © 2024 Texas Instruments Incorporated

7 Application and Implementation

Note

Information in the following applications sections is not part of the TI component specification, and TI does not warrant its accuracy or completeness. TI's customers are responsible for determining suitability of components for their purposes, as well as validating and testing their design implementation to confirm system functionality.

7.1 Application Information

The TDP2044 is a high-speed linear repeater which extends the reach of differential channels impaired by loss from transmission media like PCBs and cables. The device can be deployed in a variety of different systems. The following sections outline typical applications and their associated design considerations.

7.2 Typical Applications

The TDP2044 is a linear redriver with integrated cross-point mux to account for USB Type-C plug orientationthat can be used as DisplayPort mainlink signal conditioner. The TDP2044 can be used in both source and sink applications as illustrated in Figure 7-1.

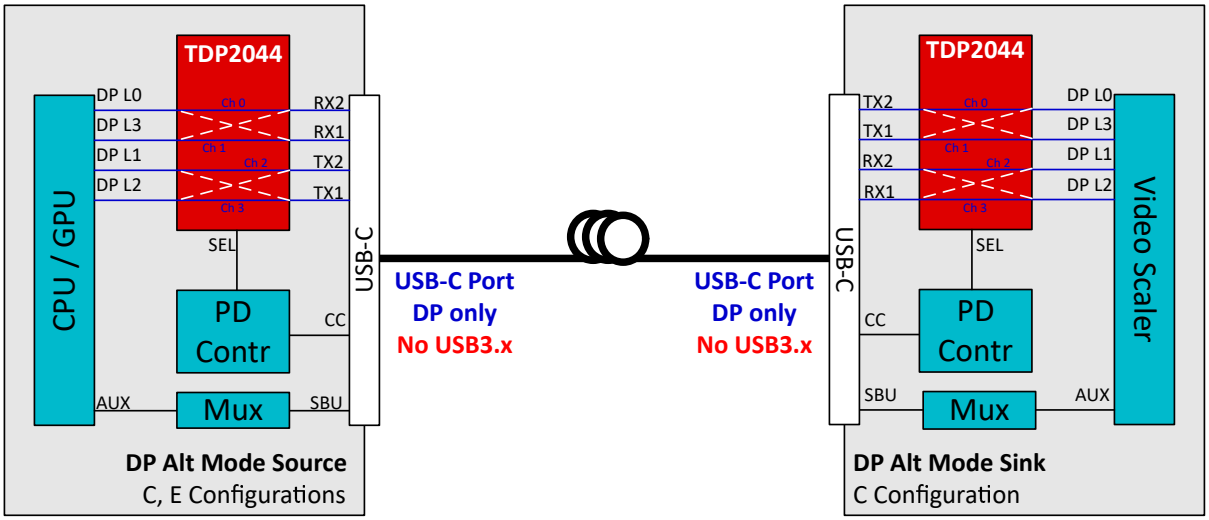

Figure 7-1. Typical Application

7.2.1 USB Type-C DP Only Source Applications

The TDP2044 can be used in a video source/sink systems such as PC motherboard, industrial PCs, docking stations, industrial display/signs, display monitor among other applications to boost DisplayPort mainlink signals to increase the reach of the source and sink channel while providing cross-point function. The following sections outline detailed procedures and design requirements for a typical DP 2.1 application. However, the design recommendations can be used in other use cases.

7.2.1.1 Design Requirements

As with any high-speed design, there are many factors which influence the overall performance. The following list indicates critical areas for consideration during design.

- Match the length between the P and N traces of the single-end segments of the differential pair.
- Use a uniform trace width and trace spacing for differential pairs.
- Place AC-coupling capacitors near the receiver end of each channel segment to minimize reflections.
- AC-coupling capacitors of 220nF are recommended. Set the maximum body size to 0402 and add a cutout void on the GND plane below the landing pad of the capacitor to reduce parasitic capacitance to GND.

- Surface mount connector is recommended. For through hole connection, back-drill connector vias and signal vias to minimize stub length.
- Use ground reference plane vias for a low inductance path for the return current.

7.2.1.2 Detailed Design Procedure

The TDP2044 provides signal conditioning for four DP mainlink channels along with 4:4 cross-point (channel re-orientation) function. The device is a linear redriver which is agnostic to DP link training. The DP link training negotiation between a display source and sink stays effective through the device. The redriver becomes part of the electrical channel along with passive traces, cables, and other channel elements, resulting in optimum source and sink parameters for best electrical link. Figure 7-2 shows a simplified schematic for DisplayPort application using TDP2044 to implement USB Type-C DP alternate mode in a source application. A USB power delivery (PD) device control the cross-point mux polarity signal SEL according to USB Type-C cable plug position.

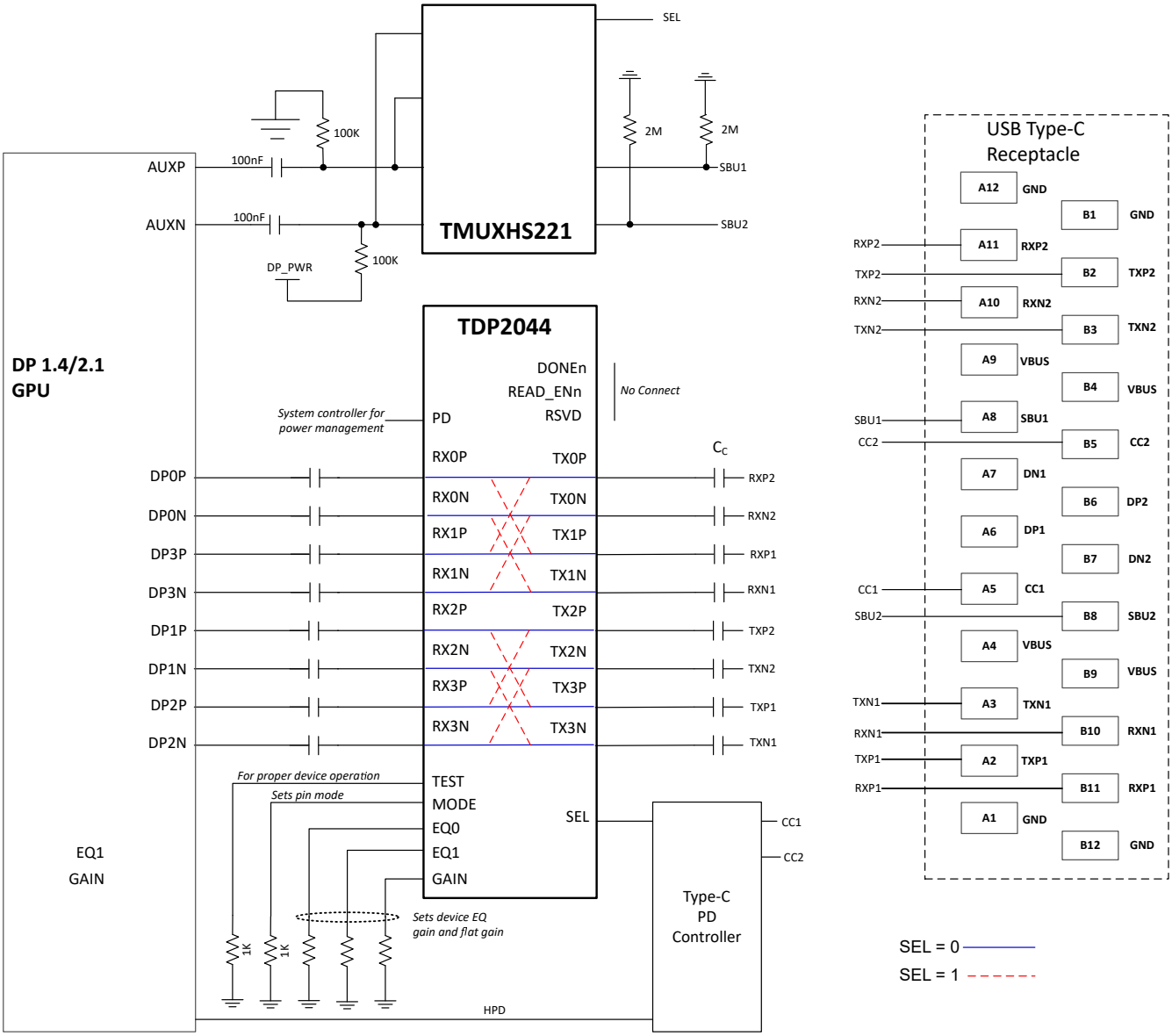

Figure 7-2. Simplified Schematic for USB-C Alternate Mode Source Application

Copyright © 2024 Texas Instruments Incorporated

Note

DisplayPort side-band signals AUXp,n and HPD are bypassed. An external mux such as TMUXHS221 can provide flipping functions for SBU signals as illustrated in Figure 7-2. An inverted HPD signal can be used to control the device standby operation using the PD pin; however appropriate filtering out of HPD interrupt signals must be provisioned.

In some applications where a microcontroller or other link monitoring device has DP link state information, the controller can exercise I^2C registers of TDP2044 for additional power management.

Table 7-1 shows how DP signals are routed to a USB Type-C connector for a source applications for both SEL = 0 and SEL =1 configurations

Table 7-1. DP Alt Mode Source Pin Assignment C or E

SEL pin	DP Lane from Source	TDP2044 RX PIN	TDP2044 TX PIN	USB-C Receptacle pin
0	DP0P/N	RX0P/N	TX0P/N	RXP/N2
0	DP3P/N	RX1P/N	TX1P/N	RXP/N1
0	DP1P/N	RX2P/N	TX2P/N	TXP/N2
0	DP2P/N	RX3P/N	TX3P/N	TXP/N1
1	DP0P/N	RX0P/N	TX1P/N	RXP/N1
1	DP3P/N	RX1P/N	TX0P/N	RXP/N2
1	DP1P/N	RX2P/N	TX3P/N	TXP/N1
1	DP2P/N	RX3P/N	TX2P/N	TXP/N2

While a DP alternate mode sink implementation is similar, the TDP2044 can not support both configuration C and E in the same DP sink board. If the both configurations are required the DP Sink must handle the DP lane order and polarity inversion. Most sink implementations use configuration C illustrated inTable 7-2.

Table 7-2. DP Alt Mode Sink Pin Assignment C

SEL pin	USB-C Receptacle pin	TDP2044 RX PIN	TDP2044 TX PIN	DP Lane to Sink
0	TXP/N2	RX0P/N	TX0P/N	DP0P/N
0	TXP/N1	RX1P/N	TX1P/N	DP3P/N
0	RXP/N2	RX2P/N	TX2P/N	DP1P/N
0	RXP/N1	RX3P/N	TX3P/N	DP2P/N
1	TXP/N1	RX0P/N	TX1P/N	DP0P/N
1	TXP/N2	RX1P/N	TX0P/N	DP3P/N
1	RXP/N1	RX2P/N	TX3P/N	DP1P/N
1	RXP/N2	RX3P/N	TX2P/N	DP2P/N

USB PD controller is used to negotiate DP Alternate Mode with a link partner. USB PD specification require that the TDP2044 TX/RX pins connected to USB Type-C pins support USB safe state electrical requirements. To support USB safe state the TDP2044 must be entered into standby mode with PD = H. Table 7-3 shows electrical characteristics in standby mode.

Table 7-3. TX and RX Pins in Standby Mode

Parameters	Standby mode (PD = H)
Rx CMV	1.4V
Rx impedance to GND	230K
Tx CMV	0.9V
Tx impedance to GND	3M

7.2.1.3 Application Curves

The TDP2044 is a linear redriver that can be used to extend channel reach of a DP link. The redriver can help to pass compliance by removing ISI deterministic jitter at data rates up to 20Gbps (UHBR20). Figure 7-3 - Figure 7-6 shows a typical DP 2.1 Tx compliance channel setup along with compliance Eye Diagrams at TP3_EQ with or without redriver. The comparison of eye diagrams show that TDP2044 can provide signal conditioning by extending horizontal and vertical eye openings that makes a failing eye to pass.

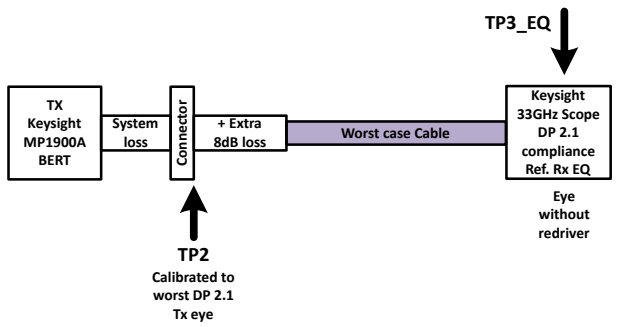

Figure 7-3. A Typical 20Gbps (UHBR20) DP 2.1 Tx Compliance Channel Setup with no Redriver

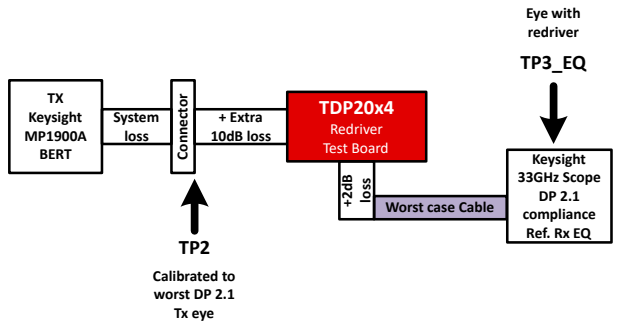

Figure 7-4. A Typical 20Gbps (UHBR20) DP 2.1 Tx Compliance Channel Setup with Redriver

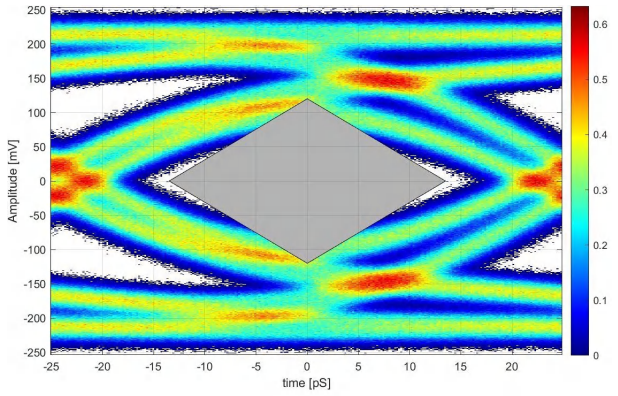

Figure 7-5. DP 2.1 Tx Compliance Eye Diagram at TP3_EQ with no Redriver

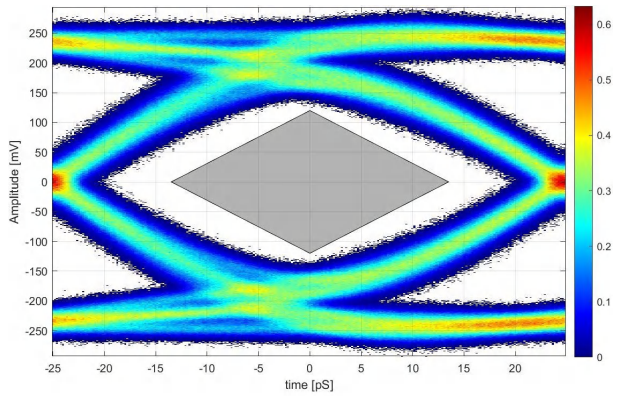

Figure 7-6. DP 2.1 Tx Compliance Eye Diagram at TP3_EQ with TDP2044 for Signal Conditioning

7.3 Power Supply Recommendations

Follow these general guidelines when designing the power supply:

1. The power supply must be designed to provide the operating conditions outlined in the recommended operating conditions section in terms of DC voltage, AC noise, and start-up ramp time.
2. The TDP2044 does not require any special power supply filtering, such as ferrite beads, provided that the recommended operating conditions are met. Only standard supply decoupling is required. Typical supply decoupling consists of a 0.1µF capacitor per VCC pin, one 1.0µF bulk capacitor per device, and one 10µF bulk capacitor per power bus that delivers power to one or more TDP2044 devices. The local decoupling (0.1µF) capacitors must be connected as close to the VCC pins as possible and with minimal path to the TDP2044 ground pad.

Copyright © 2024 Texas Instruments Incorporated

7.4 Layout

7.4.1 Layout Guidelines

Refer to following guidelines when designing the layout of the system implementation:

1. Place the decoupling capacitors as close to the VCC pins as possible. Placing the decoupling capacitors directly underneath the device is recommended if the board design permits.
2. Make sure the high-speed differential signals TXnP/TXnN and RXnP/RXnN are tightly coupled, skew matched, and impedance controlled.
3. Avoid vias when possible on the high-speed differential signals. When vias must be used, take care to minimize the via stub, either by transitioning through most or all layers or by back drilling.
4. GND relief can be used (but is not required) beneath the high-speed differential signal pads to improve signal integrity by counteracting the pad capacitance.
5. Place GND vias directly beneath the device connecting the GND plane attached to the device to the GND planes on other layers. This has the added benefit of improving thermal conductivity from the device to the board.
6. Refer to land pattern example in the mechanical drawing section for the device thermal pad design recommendation.

7.4.2 Layout Example

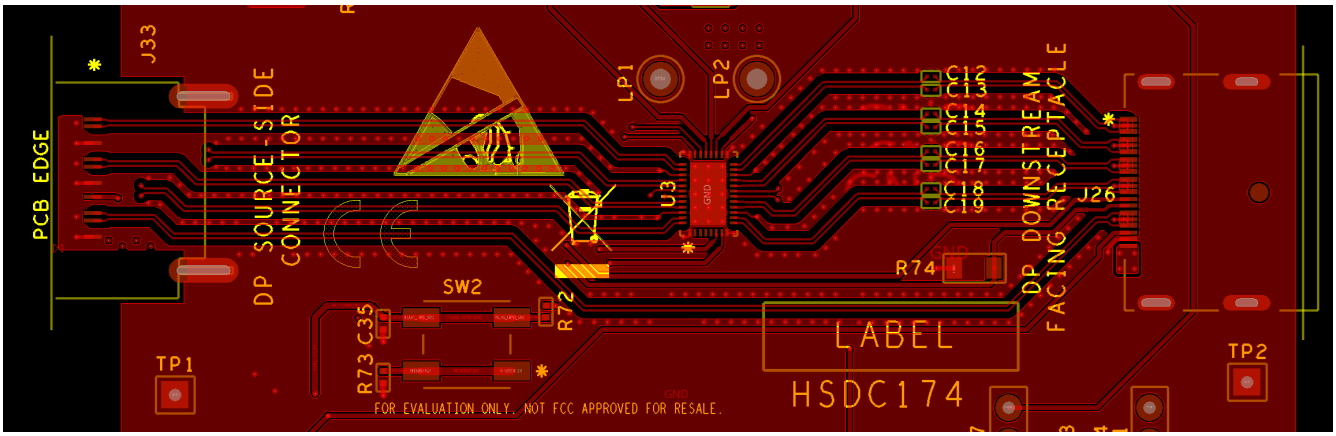

Figure 7-7. TDP2044 Layout Example – Sub-Section of TI Evaluation Board with DP Connectors

8 Device and Documentation Support

8.1 Receiving Notification of Documentation Updates

To receive notification of documentation updates, navigate to the device product folder on ti.com. Click on *Notifications* to register and receive a weekly digest of any product information that has changed. For change details, review the revision history included in any revised document.

8.2 Support Resources

TI E2E™ support forums are an engineer's go-to source for fast, verified answers and design help — straight from the experts. Search existing answers or ask your own question to get the quick design help you need.

Linked content is provided "AS IS" by the respective contributors. They do not constitute TI specifications and do not necessarily reflect TI's views; see TI's Terms of Use.

8.3 Trademarks

TI E2E™ is a trademark of Texas Instruments.
All trademarks are the property of their respective owners.

8.4 Electrostatic Discharge Caution

This integrated circuit can be damaged by ESD. Texas Instruments recommends that all integrated circuits be handled with appropriate precautions. Failure to observe proper handling and installation procedures can cause damage.

ESD damage can range from subtle performance degradation to complete device failure. Precision integrated circuits may be more susceptible to damage because very small parametric changes could cause the device not to meet its published specifications.

8.5 Glossary

TI Glossary This glossary lists and explains terms, acronyms, and definitions.

9 Revision History

DATE	REVISION	NOTES
June 2024	*	Initial Release

10 Mechanical, Packaging, and Orderable Information

The following pages include mechanical, packaging, and orderable information. This information is the most current data available for the designated devices. This data is subject to change without notice and revision of this document. For browser-based versions of this data sheet, refer to the left-hand navigation.

Copyright © 2024 Texas Instruments Incorporated

PACKAGING INFORMATION

Orderable part number	Status (1)	Material type (2)	Package | Pins	Package qty | Carrier	RoHS (3)	Lead finish/ Ball material (4)	MSL rating/ Peak reflow (5)	Op temp (°C)	Part marking (6)
TDP2044IRNQR	Active	Production	WQFN (RNQ) | 40	3000 | LARGE T&R	Yes	NIPDAU	Level-1-260C-UNLIM	-40 to 85	TDP2
TDP2044IRNQR.B	Active	Production	WQFN (RNQ) | 40	3000 | LARGE T&R	Yes	NIPDAU	Level-1-260C-UNLIM	-40 to 85	TDP2
TDP2044IRNQT	Active	Production	WQFN (RNQ) | 40	250 | SMALL T&R	Yes	NIPDAU	Level-1-260C-UNLIM	-40 to 85	TDP2
TDP2044IRNQT.B	Active	Production	WQFN (RNQ) | 40	250 | SMALL T&R	Yes	NIPDAU	Level-1-260C-UNLIM	-40 to 85	TDP2
TDP2044RNQR	Active	Production	WQFN (RNQ) | 40	3000 | LARGE T&R	Yes	NIPDAU	Level-1-260C-UNLIM	0 to 70	TDP2
TDP2044RNQR.B	Active	Production	WQFN (RNQ) | 40	3000 | LARGE T&R	Yes	NIPDAU	Level-1-260C-UNLIM	0 to 70	TDP2
TDP2044RNQT	Active	Production	WQFN (RNQ) | 40	250 | SMALL T&R	Yes	NIPDAU	Level-1-260C-UNLIM	0 to 70	TDP2
TDP2044RNQT.B	Active	Production	WQFN (RNQ) | 40	250 | SMALL T&R	Yes	NIPDAU	Level-1-260C-UNLIM	0 to 70	TDP2

(1) **Status:** For more details on status, see our product life cycle.

(2) **Material type:** When designated, preproduction parts are prototypes/experimental devices, and are not yet approved or released for full production. Testing and final process, including without limitation quality assurance, reliability performance testing, and/or process qualification, may not yet be complete, and this item is subject to further changes or possible discontinuation. If available for ordering, purchases will be subject to an additional waiver at checkout, and are intended for early internal evaluation purposes only. These items are sold without warranties of any kind.

(3) **RoHS values:** Yes, No, RoHS Exempt. See the TI RoHS Statement for additional information and value definition.

(4) **Lead finish/Ball material:** Parts may have multiple material finish options. Finish options are separated by a vertical ruled line. Lead finish/Ball material values may wrap to two lines if the finish value exceeds the maximum column width.

(5) **MSL rating/Peak reflow:** The moisture sensitivity level ratings and peak solder (reflow) temperatures. In the event that a part has multiple moisture sensitivity ratings, only the lowest level per JEDEC standards is shown. Refer to the shipping label for the actual reflow temperature that will be used to mount the part to the printed circuit board.

(6) **Part marking:** There may be an additional marking, which relates to the logo, the lot trace code information, or the environmental category of the part.

Multiple part markings will be inside parentheses. Only one part marking contained in parentheses and separated by a "~" will appear on a part. If a line is indented then it is a continuation of the previous line and the two combined represent the entire part marking for that device.

Important Information and Disclaimer: The information provided on this page represents TI's knowledge and belief as of the date that it is provided. TI bases its knowledge and belief on information provided by third parties, and makes no representation or warranty as to the accuracy of such information. Efforts are underway to better integrate information from third parties. TI has taken and continues to take reasonable steps to provide representative and accurate information but may not have conducted destructive testing or chemical analysis on incoming materials and chemicals. TI and TI suppliers consider certain information to be proprietary, and thus CAS numbers and other limited information may not be available for release.

In no event shall TI's liability arising out of such information exceed the total purchase price of the TI part(s) at issue in this document sold by TI to Customer on an annual basis.

TAPE AND REEL INFORMATION

REEL DIMENSIONS

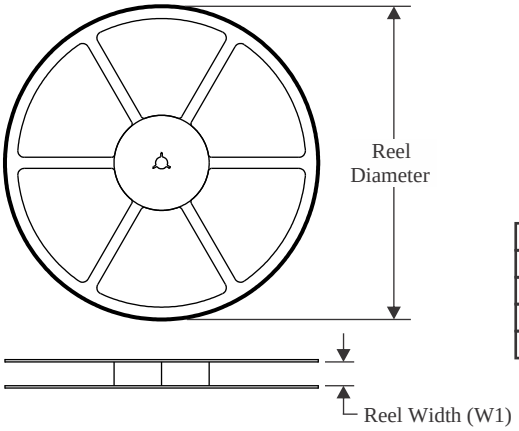

TAPE DIMENSIONS

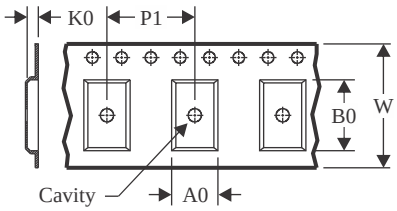

A0	Dimension designed to accommodate the component width
B0	Dimension designed to accommodate the component length
K0	Dimension designed to accommodate the component thickness
W	Overall width of the carrier tape
P1	Pitch between successive cavity centers

QUADRANT ASSIGNMENTS FOR PIN 1 ORIENTATION IN TAPE

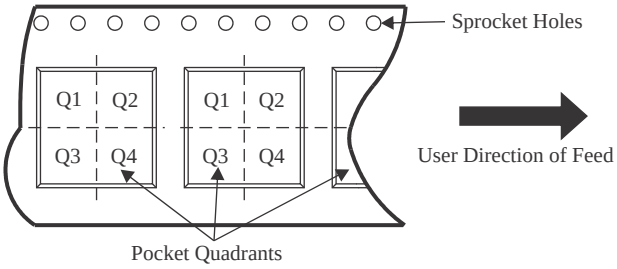

*All dimensions are nominal

Device	Package Type	Package Drawing	Pins	SPQ	Reel Diameter (mm)	Reel Width W1 (mm)	A0 (mm)	B0 (mm)	K0 (mm)	P1 (mm)	W (mm)	Pin1 Quadrant
TDP2044IRNQR	WQFN	RNQ	40	3000	330.0	12.4	4.3	6.3	1.1	8.0	12.0	Q2
TDP2044IRNQT	WQFN	RNQ	40	250	180.0	12.4	4.3	6.3	1.1	8.0	12.0	Q2
TDP2044RNQR	WQFN	RNQ	40	3000	330.0	12.4	4.3	6.3	1.1	8.0	12.0	Q2
TDP2044RNQT	WQFN	RNQ	40	250	180.0	12.4	4.3	6.3	1.1	8.0	12.0	Q2

TAPE AND REEL BOX DIMENSIONS

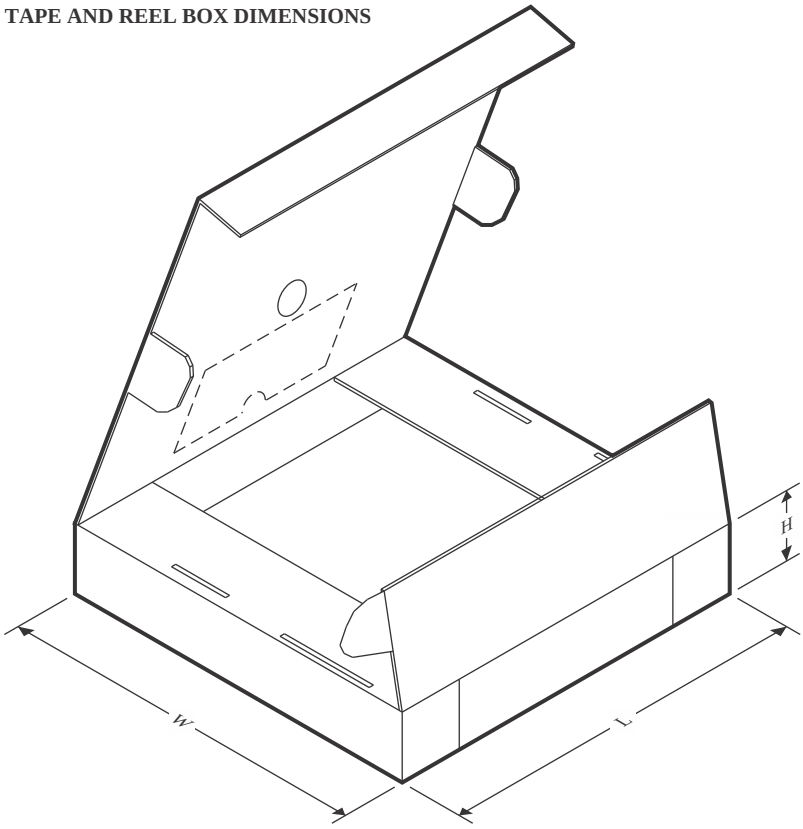

*All dimensions are nominal

Device	Package Type	Package Drawing	Pins	SPQ	Length (mm)	Width (mm)	Height (mm)
TDP2044IRNQR	WQFN	RNQ	40	3000	360.0	360.0	36.0
TDP2044IRNQT	WQFN	RNQ	40	250	210.0	185.0	35.0
TDP2044RNQR	WQFN	RNQ	40	3000	360.0	360.0	36.0
TDP2044RNQT	WQFN	RNQ	40	250	210.0	185.0	35.0

PACKAGE OUTLINE

RNQ0040A

WQFN - 0.8 mm max height

PLASTIC QUAD FLATPACK - NO LEAD

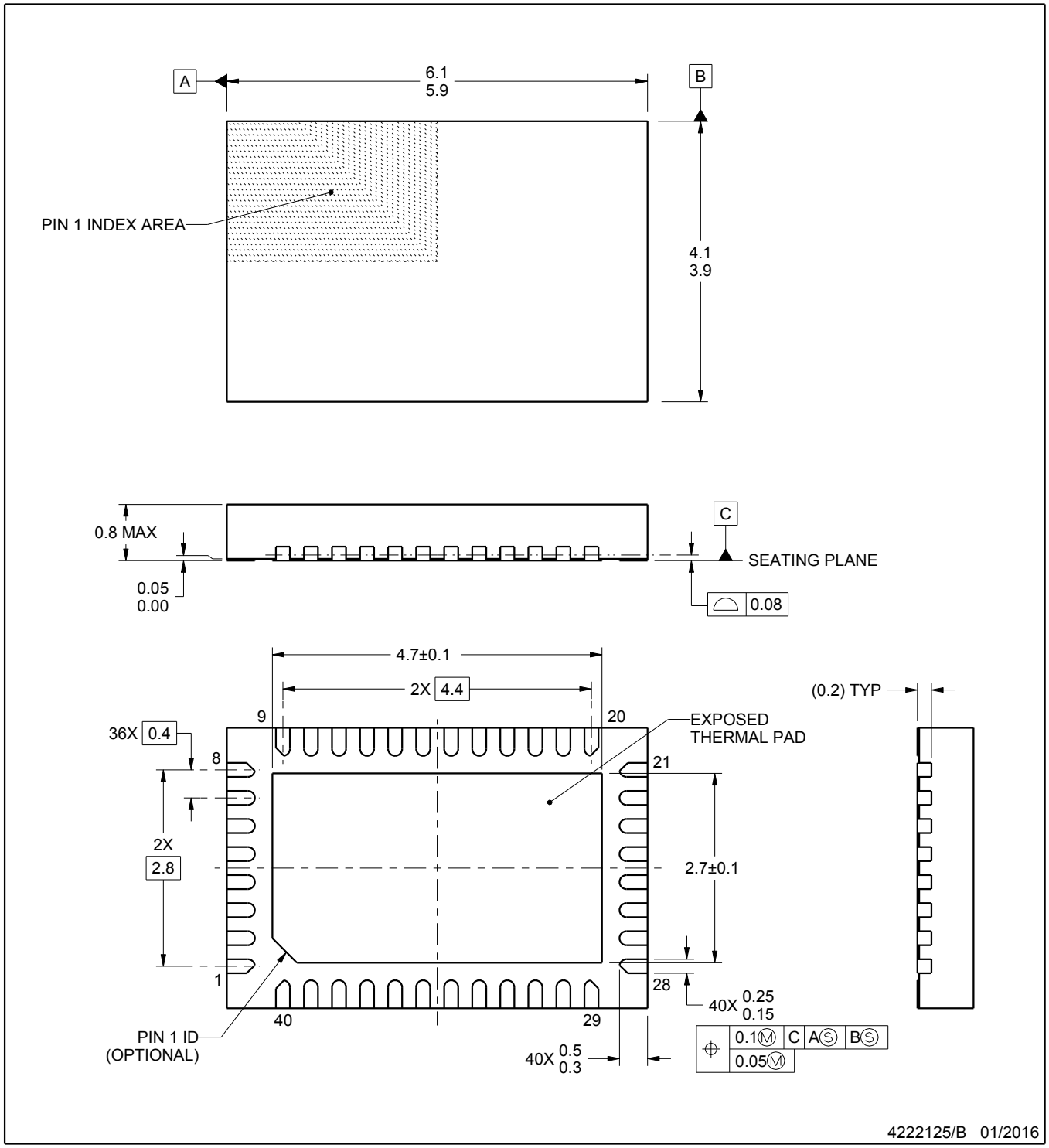

NOTES:

1. All linear dimensions are in millimeters. Any dimensions in parenthesis are for reference only. Dimensioning and tolerancing per ASME Y14.5M.
2. This drawing is subject to change without notice.
3. The package thermal pad must be soldered to the printed circuit board for thermal and mechanical performance.

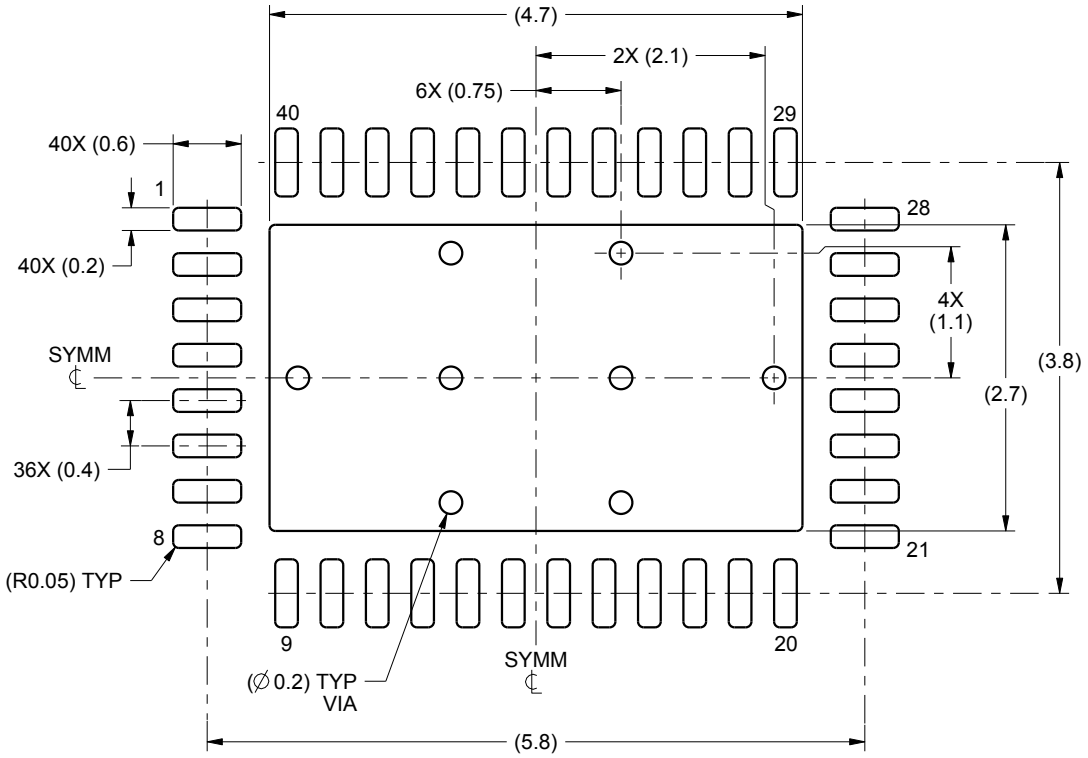

LAND PATTERN EXAMPLE
SCALE:15X

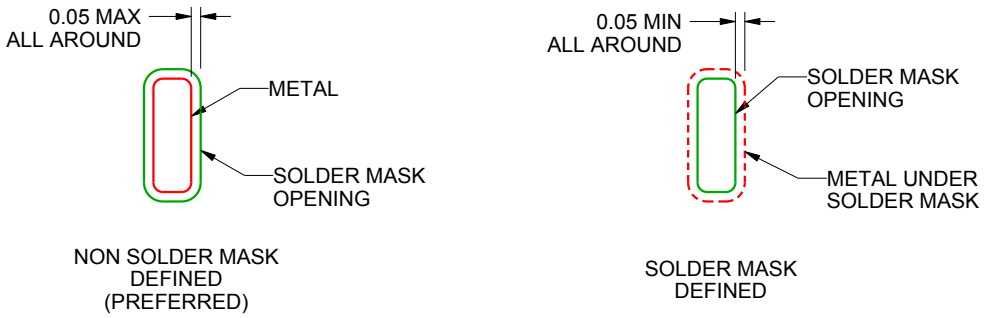

SOLDER MASK DETAILS

4222125/B 01/2016

NOTES: (continued)

4. This package is designed to be soldered to a thermal pad on the board. For more information, see Texas Instruments literature number SLUA271 (www.ti.com/lit/slua271).

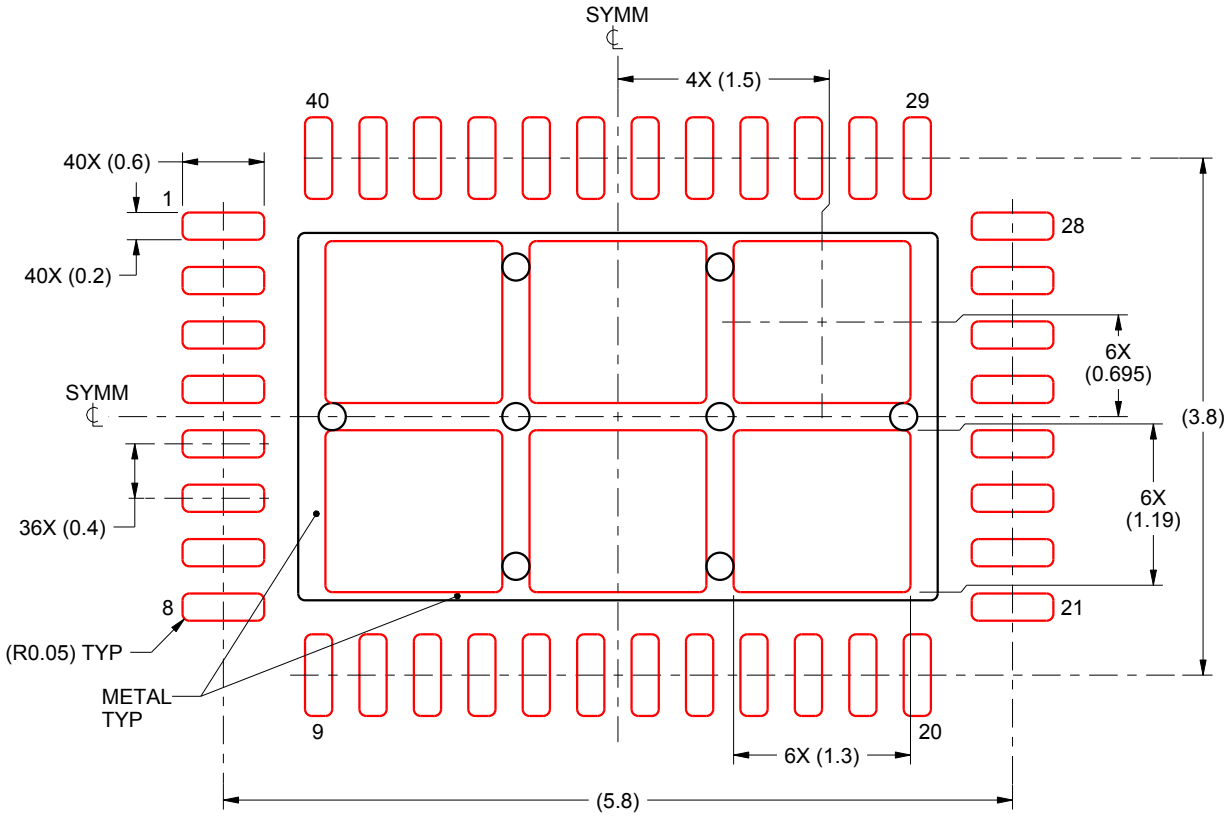

SOLDER PASTE EXAMPLE
BASED ON 0.1 mm THICK STENCIL

EXPOSED PAD
73% PRINTED SOLDER COVERAGE BY AREA
SCALE:18X

4222125/B 01/2016

NOTES: (continued)

5. Laser cutting apertures with trapezoidal walls and rounded corners may offer better paste release. IPC-7525 may have alternate design recommendations.

IMPORTANT NOTICE AND DISCLAIMER

TI PROVIDES TECHNICAL AND RELIABILITY DATA (INCLUDING DATASHEETS), DESIGN RESOURCES (INCLUDING REFERENCE DESIGNS), APPLICATION OR OTHER DESIGN ADVICE, WEB TOOLS, SAFETY INFORMATION, AND OTHER RESOURCES “AS IS” AND WITH ALL FAULTS, AND DISCLAIMS ALL WARRANTIES, EXPRESS AND IMPLIED, INCLUDING WITHOUT LIMITATION ANY IMPLIED WARRANTIES OF MERCHANTABILITY, FITNESS FOR A PARTICULAR PURPOSE OR NON-INFRINGEMENT OF THIRD PARTY INTELLECTUAL PROPERTY RIGHTS.

These resources are intended for skilled developers designing with TI products. You are solely responsible for (1) selecting the appropriate TI products for your application, (2) designing, validating and testing your application, and (3) ensuring your application meets applicable standards, and any other safety, security, regulatory or other requirements.

These resources are subject to change without notice. TI grants you permission to use these resources only for development of an application that uses the TI products described in the resource. Other reproduction and display of these resources is prohibited. No license is granted to any other TI intellectual property right or to any third party intellectual property right. TI disclaims responsibility for, and you fully indemnify TI and its representatives against any claims, damages, costs, losses, and liabilities arising out of your use of these resources.

TI’s products are provided subject to TI’s Terms of Sale, TI’s General Quality Guidelines, or other applicable terms available either on ti.com or provided in conjunction with such TI products. TI’s provision of these resources does not expand or otherwise alter TI’s applicable warranties or warranty disclaimers for TI products. Unless TI explicitly designates a product as custom or customer-specified, TI products are standard, catalog, general purpose devices.

TI objects to and rejects any additional or different terms you may propose.

Copyright © 2026, Texas Instruments Incorporated

Last updated 10/2025