TLA431, TLA432 All-Capacitor Stable Precision Programmable Reference

1 Features

- No output capacitor required
- Stable with all capacitive loads
- Reference voltage tolerance at 25°C
  - 1% (A grade)
  - 0.5% (B grade)
- Adjustable output voltage: V_{ref} to 36V
- Operation from −40°C to 125°C
- Typical temperature drift (TLA43xA)
  - 8mV (I temperature)
  - 11mV (Q temperature)
- Low output noise
- Typical output impedance: 0.2Ω
- Sink-current capability: 0.2mA to 100mA
- Pin-compatible with industry-standard TL431 and TL432
- Available in ultra-small DRL package

2 Applications

- Rack server power
- Industrial AC/DC
- AC inverter and VF drives
- Servo drive control module
- Notebook PC power adapter design

3 Description

The TLA431 and TLA432 devices are three-terminal adjustable shunt regulators that are stable with all capacitor loads. The devices are pin compatible with the industry standard TL431 and TL432 but with improved stability to support all capacitor loads. The output cathode voltage can be set to any value between V_{ref} (2.495V) and 36V, with two external resistors. These devices have a typical output impedance of 0.2Ω. Active output circuitry provides a very sharp turn-on characteristic, making these devices excellent replacements for Zener diodes in many applications, such as on-board regulation, adjustable power supplies, and switching power supplies. The TLA431 also functions as a comparator for undervoltage monitoring. The internal amplifier and reference of the TLA431 is used an error amplifier in isolated optocoupler flyback power supplies. The TLA432 device has exactly the same functionality and electrical specifications as the TLA431 device.

The TLA431 and TLA432 devices are specified in two temperature grades, I and Q. In addition, the devices offer good stability reference voltage over the entire temperature range.

Package Information

PART NUMBER	PACKAGE (PIN)(1)	PACKAGE SIZE(2)
TLA431	DBZ (SOT-23, 3)	2.90mm × 1.30mm
TLA432	DBZ (SOT-23, 3)	2.90mm × 1.30mm
TLA431	SOT5X3 (6)	1.20mm × 1.60mm

(1) For all available packages, see the orderable addendum at the end of the datasheet.
(2) The package size (length × width) is a nominal value and includes pins, where applicable.

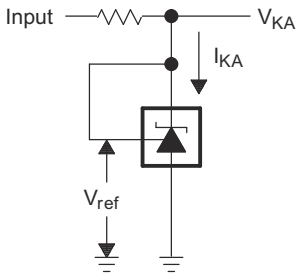

Simplified Schematic

An IMPORTANT NOTICE at the end of this data sheet addresses availability, warranty, changes, use in safety-critical applications, intellectual property matters and other important disclaimers. PRODUCTION DATA.

Table of Contents

1 Features....1
2 Applications....1
3 Description....1
4 Device Comparison Table....3
5 Pin Configuration and Functions....4
6 Specifications....5
6.1 Absolute Maximum Ratings....5
6.2 ESD Ratings....5
6.3 Recommended Operating Conditions....5
6.4 Thermal Information....5
6.5 Electrical Characteristics....6
6.6 Typical Characteristics....7
7 Parameter Measurement Information....10
7.1 Temperature Coefficient....10
7.2 Dynamic Impedance....11
8 Detailed Description....13
8.1 Overview....13
8.2 Functional Block Diagram....13
8.3 Feature Description....13
8.4 Device Functional Modes....13
9 Applications and Implementation....15
9.1 Application Information....15
9.2 Typical Applications....15
9.3 System Examples....19
9.4 Power Supply Recommendations....20
9.5 Layout....21
10 Device and Documentation Support....22
10.1 Device Nomenclature....22
10.2 Documentation Support....22
10.3 Receiving Notification of Documentation Updates....22
10.4 Support Resources....22
10.5 Trademarks....22
10.6 Electrostatic Discharge Caution....22
10.7 Glossary....22
11 Revision History....22
12 Mechanical, Packaging, and Orderable Information....23

Copyright © 2026 Texas Instruments Incorporated

4 Device Comparison Table

Table 4-1. Device Comparison

DEVICE PINOUT	INITIAL ACCURACY	OPERATING FREE-AIR TEMPERATURE (T_A)
TLA431	A: 1%	I: -40°C to 85°C
TLA432	B: 0.5%	Q: -40°C to 125°C

Copyright © 2026 Texas Instruments Incorporated

5 Pin Configuration and Functions

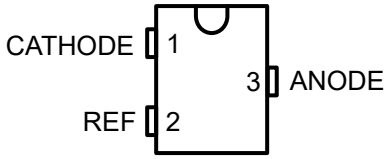

**Figure 5-1. DBZ Package,
3-Pin SOT-23, TLA431 (Top View)**

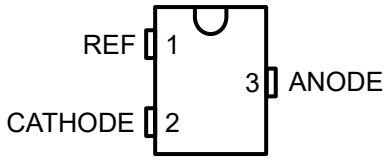

**Figure 5-2. DBZ Package,
3-Pin SOT-23, TLA432 (Top View)**

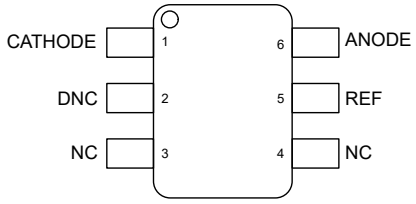

**Figure 5-3. DRL Package,
6-Pin SOT-563, TLA431 (Top View)**

Table 5-1. Pin Functions

PIN				TYPE[1]	DESCRIPTION
NAME	TLA431		TLA432		
	DBZ	DRL	DBZ		
ANODE	3	6	3	O	Common pin, normally connected to ground
CATHODE	1	1	2	I/O	Shunt Current/Voltage input
DNC	-	2	-	-	Do not connect
NC	-	3, 4	-	-	No connect
REF	2	5	1	I	Threshold relative to common anode

(1) O = output, I = input, I/O = bidirectional

Copyright © 2026 Texas Instruments Incorporated

6 Specifications

6.1 Absolute Maximum Ratings

over operating free-air temperature range (unless otherwise noted)(1)

			MIN	MAX	UNIT
V_{KA}	Cathode Voltage(2)			37	V
I_{KA}	Continuous Cathode Current Range		–100	150	mA
$I_{I(ref)}$	Reference Input Current		–0.05	10	mA
T_J	Operating Junction Temperature Range		–40	150	C
T_{stg}	Storage Temperature Range		–65	150	C

(1) Operation outside the *Absolute Maximum Ratings* may cause permanent device damage. *Absolute Maximum Ratings* do not imply functional operation of the device at these or any other conditions beyond those listed under *Recommended Operating Conditions*. If used outside the *Recommended Operating Conditions* but within the *Absolute Maximum Ratings*, the device may not be fully functional, and this may affect device reliability, functionality, performance, and shorten the device lifetime.
(2) All voltage values are with respect to ANODE, unless otherwise noted.

6.2 ESD Ratings

				VALUE	UNIT
$V_{(ESD)}$	Electrostatic discharge	Human body model (HBM), per ANSI/ESDA/JEDEC JS-001 pins(1)	DBZ Package	±2000	V
		Human body model (HBM), per ANSI/ESDA/JEDEC JS-001 pins(1)	DRL Package	±1500	V
		Charged-device model (CDM), per JEDEC specification JESD22- ±1000 VC101(2)		±1000	

(1) JEDEC document JEP155 states that 500V HBM allows safe manufacturing with a standard ESD control process.
(2) JEDEC document JEP157 states that 250V CDM allows safe manufacturing with a standard ESD control process.

6.3 Recommended Operating Conditions

See (1)

			MIN	MAX	UNIT
V_{KA}	Cathode Voltage		V_{REF}	36	V
I_{KA}	Continuous Cathode Current Range		0.2	100	mA
T_A	Operating Free-Air Temperature	TLA43xxI	–40	85	C
		TLA43xxQ	–40	125	C

(1) Maximum power dissipation is a function of $T_{J(max)}$, θ_{JA}, and T_A. The maximum allowable power dissipation at any allowable ambient temperature is $P_D = (T_{J(max)} – T_A)/\theta_{JA}$. Operating at the absolute maximum T_J of 150°C can affect reliability.

6.4 Thermal Information

THERMAL METRIC(1)		TLA43x		UNIT
		DBZ	DRL	
		3 PINS	6 PINS	
$R_{\theta JA}$	Junction-to-ambient thermal resistance	218.8	191.8	C/W
$R_{\theta JC(top)}$	Junction-to-case (top) thermal resistance	115.8	98.0	C/W
$R_{\theta JB}$	Junction-to-board thermal resistance	53.1	143.0	C/W
ψ_{JT}	Junction-to-top characterization resistance	16.6	8.83	C/W
ψ_{JB}	Junction-to-board characterization resistance	52.6	141.62	C/W

(1) For more information about traditional and new thermal metrics, see the Semiconductor and IC Package Thermal Metrics application note.

Copyright © 2026 Texas Instruments Incorporated

6.5 Electrical Characteristics

over recommended operating conditions, T_A = 25°C (unless otherwise noted)

PARAMETER		TEST CIRCUIT	TEST CONDITIONS		MIN	TYP	MAX	UNIT
V_{ref}	Reference Voltage	See Figure 7-1	V_{KA} = V_{ref}, I_{KA} = 10mA	TLA43xAx devices	2470	2495	2520	mV
V_{ref}	Reference Voltage	See Figure 7-1	V_{KA} = V_{ref}, I_{KA} = 10mA	TLA43xBx devices	2483	2495	2507	mV
$V_{I(dev)}$	Deviation of reference input voltage over full temperature range (1)	See Figure 7-1	V_{KA} = V_{ref}, I_{KA} = 10mA, –40°C < T_J < 85°C	TLA43xxI devices		8	17	mV
$V_{I(dev)}$	Deviation of reference input voltage over full temperature range (1)	See Figure 7-1	V_{KA} = V_{ref}, I_{KA} = 10mA, –0°C < T_J < 90°C	TLA43xxQ devices		5	13	mV
$V_{I(dev)}$	Deviation of reference input voltage over full temperature range (1)	See Figure 7-1	V_{KA} = V_{ref}, I_{KA} = 10mA, –40°C < T_J < 125°C	TLA43xxQ devices		11	20	mV
ΔV_{ref} / ΔV_{KA}	Ratio of change in reference voltage to the change in cathode voltage	See Figure 7-2	I_{KA} = 10mA	ΔV_{KA} = 10V - V_{ref}		–1.4	–2.7	mV/V
				ΔV_{KA} = 36V - 10V		–1	–2	mV/V
I_{ref}	Reference Input Current	See Figure 7-2	I_{KA} = 10mA, R1 = 10kΩ, R2 = ∞			2	4	µA
$I_{I(dev)}$	Deviation of reference input current over full temperature range (1)	See Figure 7-2	I_{KA} = 10mA, R1 = 10kΩ, R2 = ∞			0.8	2.5	µA
I_{min}	Minimum cathode current for regulation	See Figure 7-1	V_{KA} = V_{ref}			0.15	0.2	mA
I_{off}	Off-state cathode current	See Figure 7-3	V_{KA} = 36V, V_{ref} = 0			0.1	0.5	µA
$\|Z_{KA}\|$	Dynamic Impedance (2)	See Figure 7-1	V_{KA} = V_{ref}, I_{KA} = 1mA to 100mA			0.2	0.5	Ω

(1) The deviation parameters $V_{I(dev)}$ and $I_{I(dev)}$ are defined as the differences between the maximum and minimum values obtained over the rated temperature range. For more details on $V_{I(dev)}$ and how it relates to the average temperature coefficient, see Parameter Measurement Information.

(2) The dynamic impedance is defined by $|Z_{KA}| = \Delta V_{KA}/\Delta I_{KA}$. For more details on $|Z_{KA}|$ and how it relates to V_{KA}, see Parameter Measurement Information.

Copyright © 2026 Texas Instruments Incorporated

6.6 Typical Characteristics

Data at high and low temperatures are applicable only within the recommended operating free-air temperature ranges of the various devices.

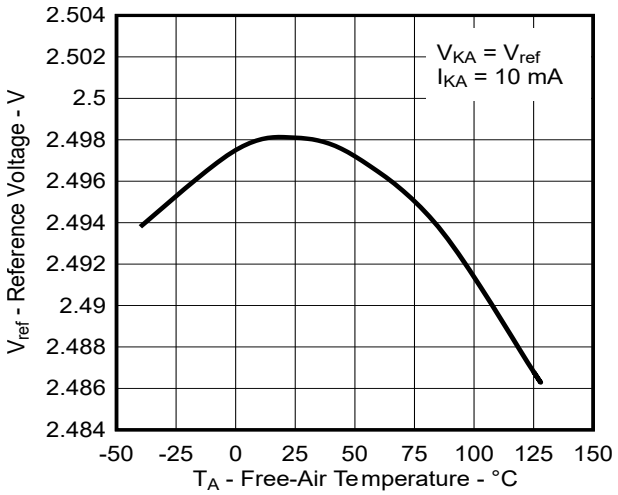

Figure 6-1. Reference Voltage vs Free-Air Temperature

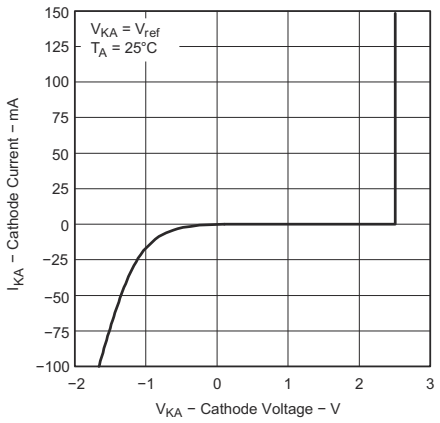

Figure 6-2. Cathode Current vs Cathode Voltage

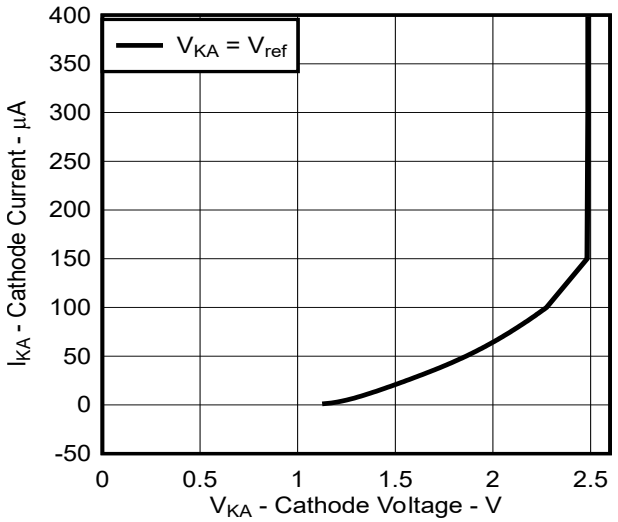

Figure 6-3. Cathode Current vs Cathode Voltage

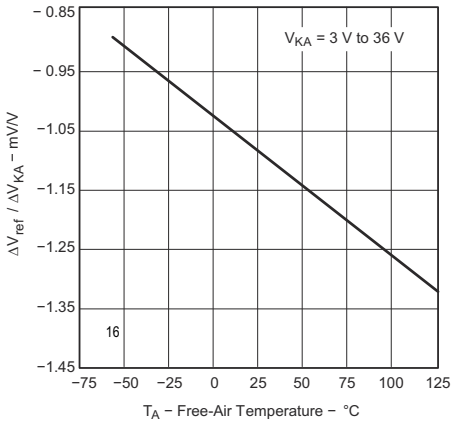

Figure 6-4. Ratio of Delta Reference Voltage to Delta Cathode Voltage vs Free-Air Temperature

Copyright © 2026 Texas Instruments Incorporated

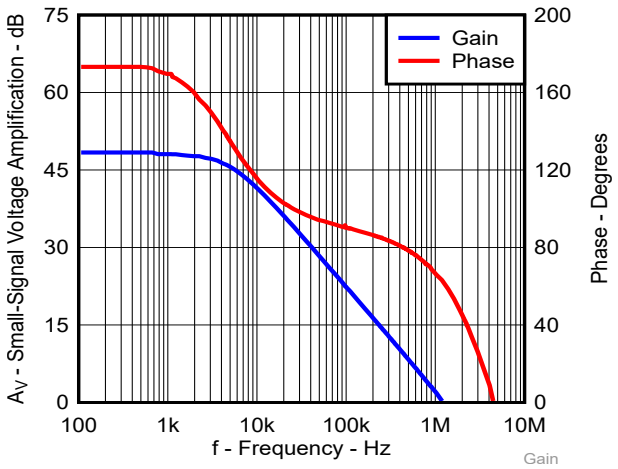

Figure 6-5. Small-Signal Voltage Amplification vs Frequency

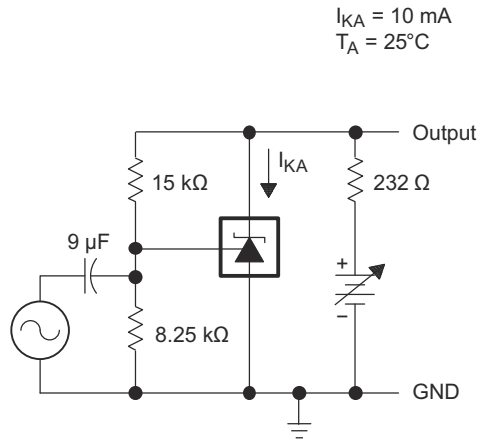

Figure 6-6. Test Circuit for Voltage Amplification

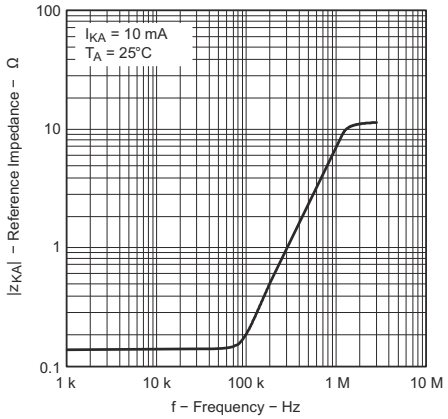

Figure 6-7. Reference Impedance vs Frequency

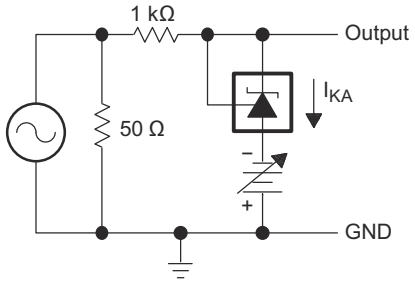

Figure 6-8. Test Circuit for Reference Impedance

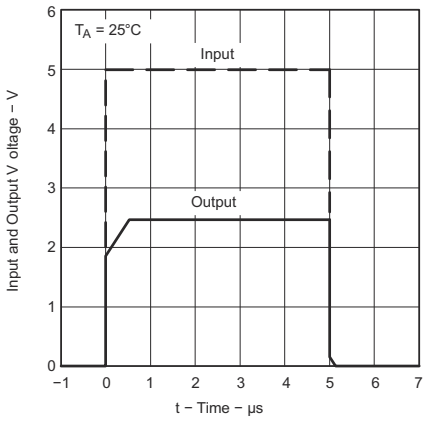

Figure 6-9. Pulse Response

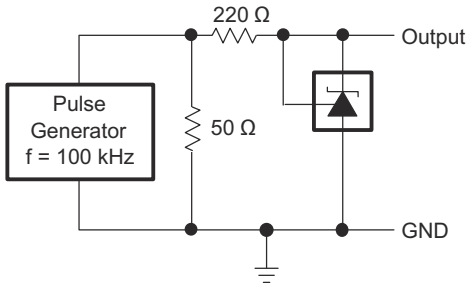

Figure 6-10. Test Circuit for Pulse Response

Copyright © 2026 Texas Instruments Incorporated

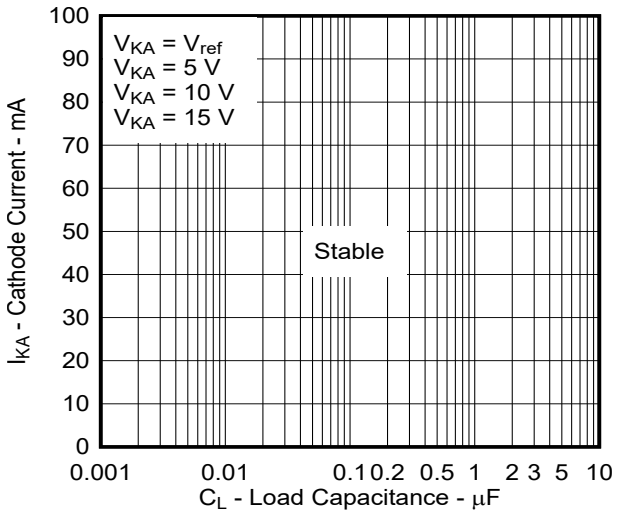

Figure 6-11. Stability Boundary Conditions

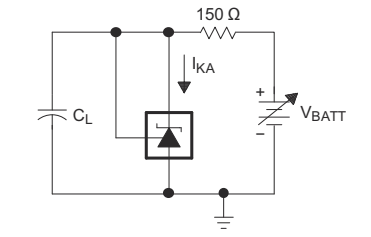

TEST CIRCUIT FOR CURVE A

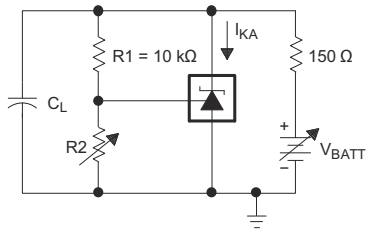

TEST CIRCUIT FOR CURVES B, C, AND D

Figure 6-12. Test Circuit for Stability Boundary Conditions

7 Parameter Measurement Information

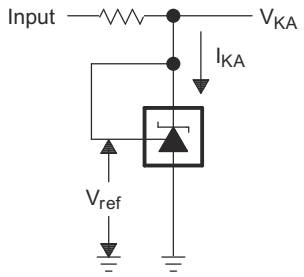

Figure 7-1. Test Circuit for $V_{KA} = V_{ref}$

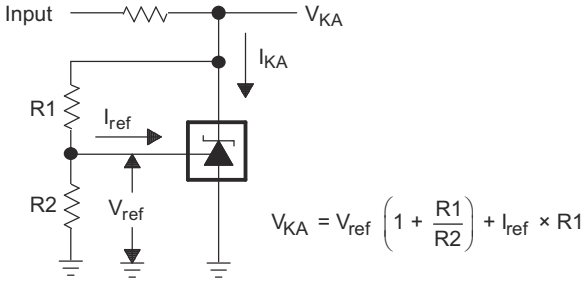

Figure 7-2. Test Circuit for $V_{KA} > V_{ref}$

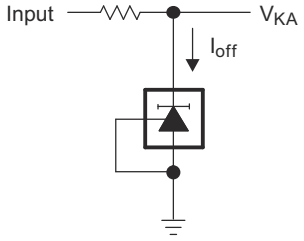

Figure 7-3. Test Circuit for I_{off}

7.1 Temperature Coefficient

The deviation of the reference voltage, V_{ref}, over the full temperature range is known as $V_{I(dev)}$. Use the parameter of $V_{I(dev)}$ to find the temperature coefficient of the device. The average full-range temperature coefficient of the reference input voltage, α_{Vref}, is defined as:

$$\left|\alpha_{V_{ref}}\right|\left(\frac{ppm}{°C}\right) = \frac{\left[\frac{V_{I(dev)}}{V_{ref\ at\ 25°C}}\right] \times 10^6}{\Delta T_A} \quad (1)$$

- ΔT_A is the rated operating temperature range of the device
- $\alpha_{V_{ref}}$ is positive or negative, depending on whether minimum V_{ref} or maximum V_{ref}, respectively, occurs at the lower temperature

Copyright © 2026 Texas Instruments Incorporated

$$\left|\alpha_{V_{ref}}\right| \left(\frac{ppm}{°C}\right) = \frac{\left(\frac{V_{I(dev)}}{V_{ref\ at\ 25°C}}\right) \times 10^6}{\Delta T_A}$$

where:

ΔT_A is the rated operating temperature range of the device.

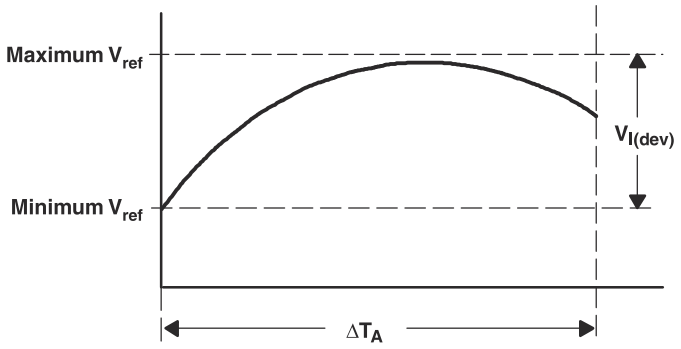

Figure 7-4. $\alpha_{V_{ref}}$ Average Temperature Coefficient

The full-range temperature coefficient is an average and therefore any subsection of the rated operating temperature range can yield a value that is greater or less than the average. For more details on temperature coefficient, see the *Voltage Reference Selection Basics White Paper*.

7.2 Dynamic Impedance

The dynamic impedance is defined as:

$$|Z_{KA}| = \frac{\Delta V_{KA}}{\Delta I_{KA}} \tag{2}$$

When the device operates with two external resistors (see Figure 6-8), the total dynamic impedance of the circuit is given by:

$$|z'| = \frac{\Delta V}{\Delta I} \tag{3}$$

Which is approximately equal to:

$$|Z_{KA}|\left[1 + \frac{R1}{R2}\right] \tag{4}$$

The dynamic impedance can affect the V_{KA} of the device. The device test current I_{test} for V_{KA} is specified in the Section 6.5. Any deviation from I_{test} can cause deviation on the output V_{KA}. Figure 7-5 shows the effect of the dynamic impedance on the V_{KA}.

Copyright © 2026 Texas Instruments Incorporated

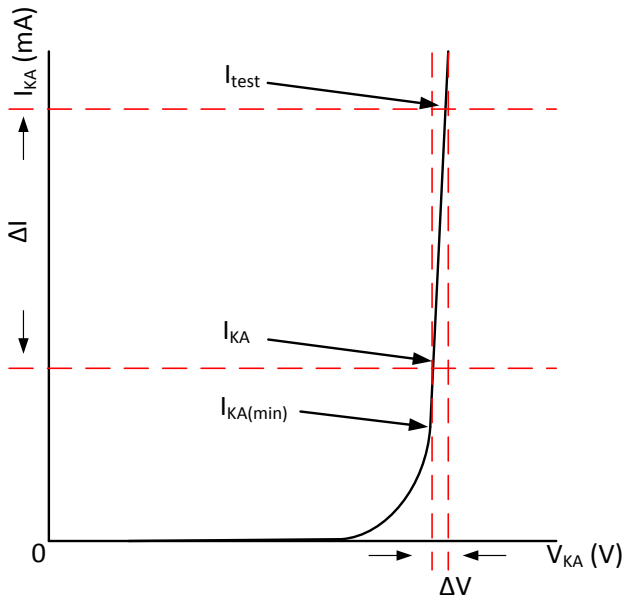

Figure 7-5. Dynamic Impedance

Copyright © 2026 Texas Instruments Incorporated

8 Detailed Description

8.1 Overview

The TLA431 and TLA432 devices are three-terminal adjustable shunt regulators that are stable with all capacitor loads. This standard device has proven ubiquity and versatility across a wide range of applications, ranging from power to signal path. This device is pin compatible with the industry standard TL431. The TLA431 contains an accurate voltage reference and op amp, which are very fundamental analog building blocks. TLA431 has improved the stability for capacitive loads. TLA431 is used in conjunction with external components to behave as one voltage reference, error amplifier, current sink, voltage clamp or comparator with an integrated reference.

TLA431 operates and adjusts to cathode voltages from 2.495V to 36V, making this part optimum for a wide range of end equipment in industrial, auto, telecom and computing. For this device to behave as a shunt regulator or error amplifier, supply a >0.2mA [I_{min}(max)] into the cathode pin. Under this condition, apply feedback from the Cathode and Ref pins to create a replica of the internal reference voltage.

The TLA432 device has exactly the same functionality and electrical specifications as the TLA431 device. The TLA43xAI devices are characterized for operation from –40°C to 85°C, and the TLA43xAQ devices are characterized for operation from –40°C to 125°C.

8.2 Functional Block Diagram

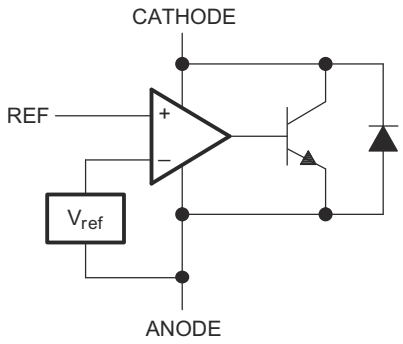

Figure 8-1. Equivalent Schematic

8.3 Feature Description

TLA431 consists of an internal reference and amplifier that outputs a sink current base on the difference between the reference pin and the virtual internal pin. The internal Darlington pair produces the sink current. A Darlington pair is used for this device to be able to sink a maximum current of 100mA.

When operated with enough voltage headroom (≥ 2.495V) and cathode current (I_{KA}), TLA431 forces the reference pin to 2.495V. However, do not leave the reference pin floating, as the reference pin needs I_{REF} ≥ 4µA (see the Electrical Characteristics). This is because the reference pin is driven into an npn, which needs base current in order operate properly.

When feedback is applied from the Cathode and Reference pins, TLA431 behaves as a Zener diode, regulating to a constant voltage dependent on current being supplied into the cathode. This is due to the internal amplifier and reference entering the proper operating regions. Apply the same amount of current needed in the above feedback situation to this device in open-loop, servo, or error amplifying implementations for the TLA431 to be in the proper linear region giving the TLA431 enough gain.

TLA431 is internally compensated to be stable without an output capacitor between the cathode and anode.

8.4 Device Functional Modes

8.4.1 Closed Loop

When the cathode/output voltage or current of TLA431 is being fed back to the reference/input pin in any form, this device is operating in closed loop. Most of the applications involving TLA431 use the TLA431 in this

Copyright © 2026 Texas Instruments Incorporated

manner to regulate a fixed voltage or current. The feedback enables this device to behave as an error amplifier, computing a portion of the output voltage and adjusting the cathode to maintain the desired regulation. This is done by relating the output voltage back to the reference pin in a manner to make the reference pin equal to the internal reference voltage, which are accomplished using resistive or direct feedback.

8.4.1.1 Stability (Closed Loop)

TLA431 is internally compensated to be stable without an output capacitor between the cathode and anode as Figure 8-2 shows. The TLA431 is also stable across all capacitive loads from cathode to anode, including the popular 0.1µF capacitor load. The TLA431 is tested to have stable operation with no capacitive loads up to capacitors larger than 10µF. See Figure 6-11 for stability chart and test setup.

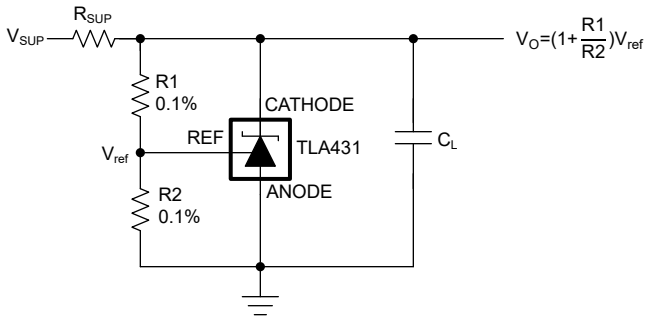

Figure 8-2. TLA431 with load capacitor

The TLA431 is sensitive to capacitance on the REF pin when the REF is isolated from cathode. For stable voltage regulation, do not add capacitance to the REF pin as Figure 8-3 shows.

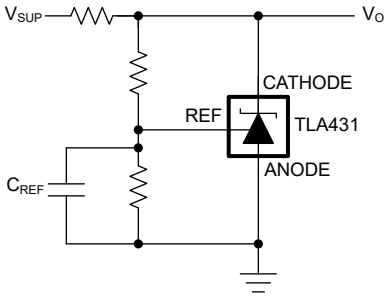

Figure 8-3. TLA431 with capacitor on REF pin

8.4.2 Open Loop (Comparator)

When the cathode or output voltage, or current of TLA431 is not being fed back to the reference/input pin in any form, this device is operating in open loop. With proper cathode current (Ika) applied to this device, TLA431 has the characteristics that Figure 9-4 shows. With such high gain in this configuration, TLA431 is typically used as a comparator. With the reference integrated makes TLA431 the preferred choice when users are trying to monitor a certain level of a single signal.

Copyright © 2026 Texas Instruments Incorporated

9 Applications and Implementation

Note

Information in the following applications sections is not part of the TI component specification, and TI does not warrant its accuracy or completeness. TI's customers are responsible for determining suitability of components for their purposes. Customers should validate and test their design implementation to confirm system functionality.

9.1 Application Information

As this device has many applications and setups, there are many situations that this datasheet does not characterize in detail.

Application note *Setting the Shunt Voltage on an Adjustable Shunt Regulator* assists designers in setting the shunt voltage to achieve optimum accuracy for this device.

9.2 Typical Applications

9.2.1 Shunt Regulator/Reference

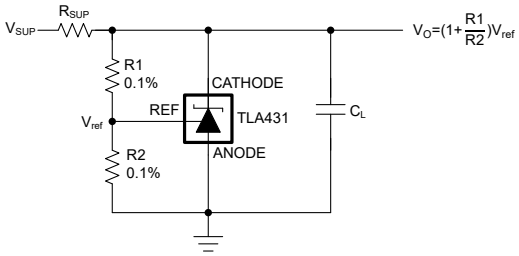

Figure 9-1. Shunt Regulator Schematic

9.2.1.1 Design Requirements

For this design example, use the parameters listed in Table 9-2 as the input parameters.

Table 9-1. Design Parameters

DESIGN PARAMETER	EXAMPLE VALUE
Reference Initial Accuracy	1.0%
Supply Voltage	24V
Cathode Current (Ik)	5mA
Output Voltage Level	2.5V - 36V
Load Capacitance	0.1µF
Feedback Resistor Values and Accuracy (R1 & R2)	10kΩ

9.2.1.2 Detailed Design Procedure

When using TLA431 as a Shunt Regulator, determine the following:

- Input voltage range
- Temperature range
- Total accuracy
- Cathode current
- Reference initial accuracy
- Output capacitance

9.2.1.2.1 Programming Output/Cathode Voltage

To program the cathode voltage to a regulated voltage a resistive bridge must be shunted between the cathode and anode pins with the mid point tied to the reference pin. This can be seen in Figure 9-1, with R1 and R2 being

Copyright © 2026 Texas Instruments Incorporated

the resistive bridge. The cathode/output voltage in the shunt regulator configuration can be approximated by the equation shown in Figure 9-1. The cathode voltage can be more accurately determined by taking in to account the cathode current:

$$V_O = \left[1 + \frac{R1}{R2}\right] \times V_{REF} - I_{REF} \times R1 \quad (5)$$

For this equation to be valid, TLA431 must be fully biased so that the TLA431 has enough open loop gain to mitigate any gain error. This can be done by meeting the Imin specification denoted in the Electrical Characteristics.

9.2.1.2.2 Total Accuracy

When programming the output above unity gain (V_{KA}=V_{REF}), TLA431 is susceptible to other errors that can effect the overall accuracy beyond V_{REF}. These errors include:

- R1 and R2 accuracies
- $V_{I(dev)}$ - Change in reference voltage over temperature
- ΔV_{REF} / ΔV_{KA} - Change in reference voltage to the change in cathode voltage
- $|z_{KA}|$ - Dynamic impedance, causing a change in cathode voltage with cathode current

Determine the worst-case cathode voltage by taking all of the variables into account. Application note *Setting the Shunt Voltage on an Adjustable Shunt Regulator* assists designers in setting the shunt voltage to achieve optimum accuracy for this device.

9.2.1.2.3 Start-Up Time

As shown in Figure 9-2, TLA431 has a fast response up to about 2V and then slowly charges to the programmed value.

9.2.1.3 Application Curve

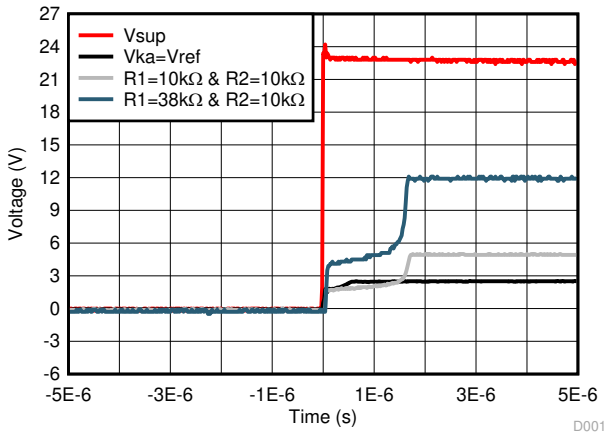

Figure 9-2. TLA431Start-Up Response

Copyright © 2026 Texas Instruments Incorporated

9.2.2 Comparator With Integrated Reference

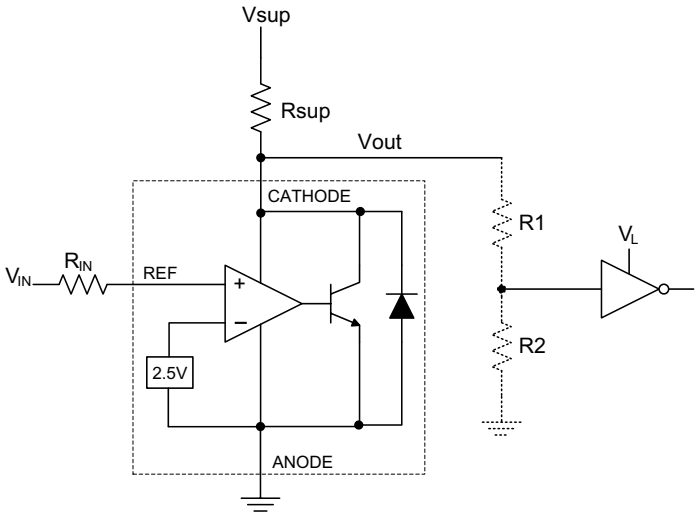

Figure 9-3. Comparator Application Schematic

9.2.2.1 Design Requirements

For this design example, use the parameters listed in *Table 9-2* as the input parameters.

Table 9-2. Design Parameters

DESIGN PARAMETER	EXAMPLE VALUE
Input Voltage Range	0V to 5V
Input Resistance	10kΩ
Supply Voltage	24V
Cathode Current (Ik)	5mA
Output Voltage Level	2V – V_{SUP}
Logic Input Thresholds VIH/VIL	V_L

9.2.2.2 Detailed Design Procedure

When using TLA431 as a comparator with reference, determine the following:

- Input Voltage Range
- Reference Voltage Accuracy
- Output logic input high and low level thresholds
- Current Source resistance

9.2.2.2.1 Basic Operation

In the configuration shown in Figure 9-3 TLA431 behaves as a comparator, comparing the V_{REF} pin voltage to the internal virtual reference voltage. When provided a proper cathode current (I_K), TLA431 has enough open loop gain to provide a quick response. This can be seen in Figure 9-4, where the R_{SUP}=10kΩ (I_{KA}=500µA) situation responds much slower than R_{SUP}=1kΩ (I_{KA}=5mA). Operation near and below I_{min} can result in low gain, leading to a slow response.

9.2.2.2.1.1 Overdrive

Slow or inaccurate responses can also occur when the reference pin is not provided enough overdrive voltage. This is the amount of voltage that is higher than the internal virtual reference. The more overdrive voltage provided, the faster the TLA431 response.

Copyright © 2026 Texas Instruments Incorporated

For applications where TLA431 is being used as a comparator, good design practice is to set the trip point to greater than the positive expected error (for example, +1.0% for the A version). For fast response, setting the trip point to >10% of the internal V_{REF} can suffice.

For minimal voltage drop or difference from Vin to the ref pin, use an input resistor <10kΩ to provide Iref.

9.2.2.2.2 Output Voltage and Logic Input Level

To use the TLA431 as a comparator, verify that the logic output is readable by the receiving logic device. This is accomplished by knowing the input high and low-level threshold voltage levels, typically denoted by V_{IH} and V_{IL}.

As seen in Figure 9-4, the output low-level voltage in open-loop/comparator mode is approximately 2V, which is typically sufficient for 5V supplied logic. However, 5V does not work for 3.3V and 1.8V supplied logic. To accommodate this, tie a resistive divider to the output to attenuate the output voltage to a voltage legible to the receiving low voltage logic device.

The output high voltage of TLA431 output high voltage is equal to V_{SUP} due to TLA431 being open-collector. If V_{SUP} is much higher than the receiving maximum input voltage tolerance of logic, attenuate the output to accommodate the outgoing reliability of logic.

When using a resistive divider on the output, be sure to make the sum of the resistive divider (R1 and R2 in Figure 9-3) is much greater than R_{SUP} to not interfere with the ability of TLA431 to pull close to V_{SUP} when turning off.

9.2.2.2.2.1 Input Resistance

TLA431 requires an input resistance in this application to source the reference current (I_{REF}) needed from this device to be in the proper operating regions while turning on. The actual voltage seen at the ref pin is

$$V_{REF} = V_{IN} - I_{REF} \times R_{IN} \quad (6)$$

Since I_{REF} can be as high as 4μA, the recommendation is to use a resistance small enough that mitigate the error that I_{REF} creates from V_{IN}.

9.2.2.3 Application Curve

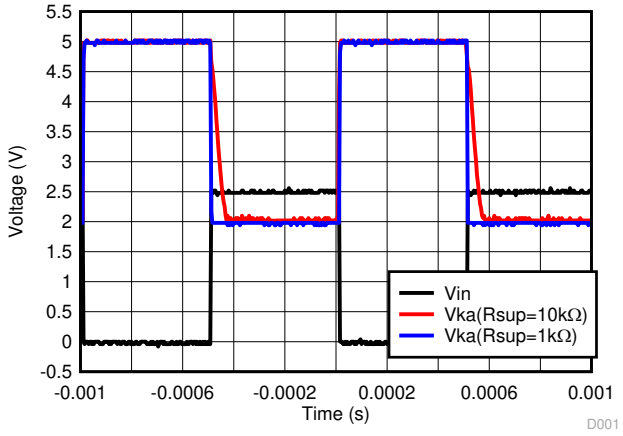

Figure 9-4. Output Response With Various Cathode Currents

Copyright © 2026 Texas Instruments Incorporated

9.3 System Examples

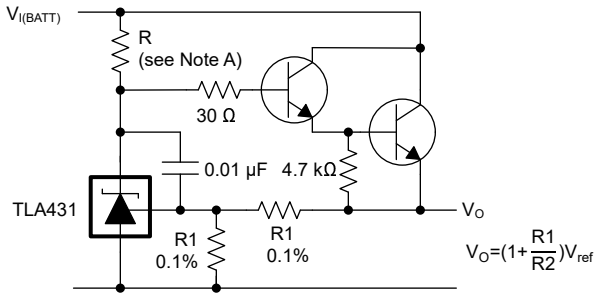

A. R is designed to provide cathode current ≥ 0.2mA to the TLA431 at minimum $V_{(BATT)}$.

Figure 9-5. Precision High-Current Series Regulator

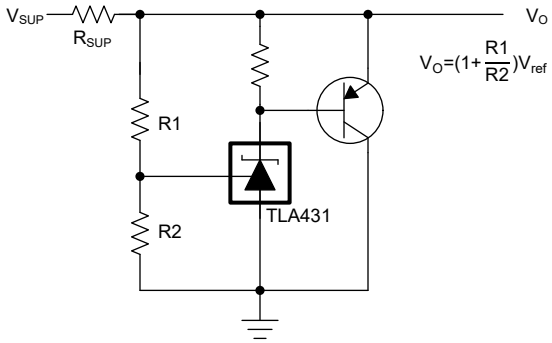

Figure 9-6. High-Current Shunt Regulator

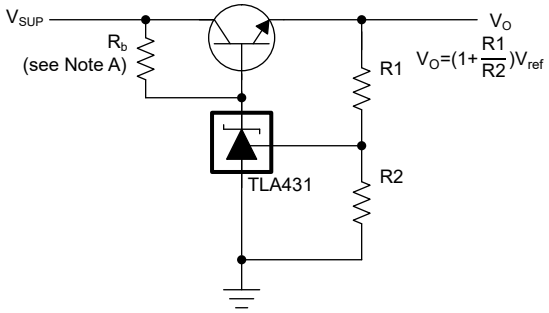

A. R_b is designed to provide cathode current ≥ 0.2mA to the TLA431.

Figure 9-7. Efficient Precision Regulator

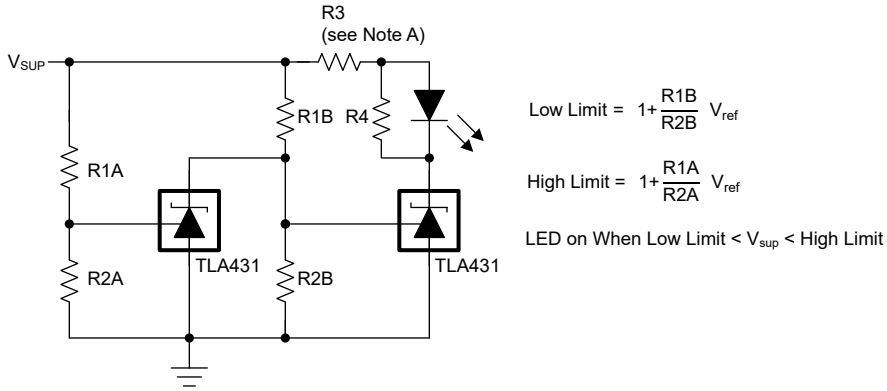

A. Select R3 and R4 to provide the desired LED intensity and cathode current ≥ 0.2mA to the TLA431 at the available V_{SUP}.

Figure 9-8. Voltage Monitor

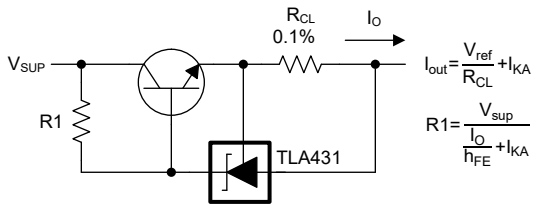

Figure 9-9. Precision Current Limiter

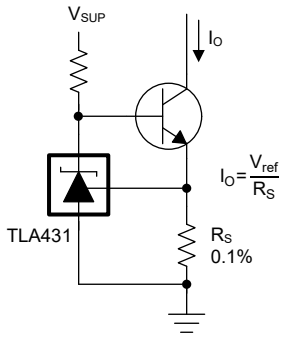

Figure 9-10. Precision Constant-Current Sink

9.4 Power Supply Recommendations

When using TLA431 as a Linear Regulator to supply a load, designers typically use a bypass capacitor on the output/cathode pin. The TLA431 is stable with all capacitive loads.

To not exceed the maximum cathode current, be sure that the supply voltage is current limited. Also, be sure to limit the current being driven into the Ref pin, as not to exceed the absolute maximum rating.

For applications shunting high currents, pay attention to the cathode and anode trace lengths, adjusting the width of the traces to have the proper current density.

Copyright © 2026 Texas Instruments Incorporated

9.5 Layout

9.5.1 Layout Guidelines

Place bypass capacitors as close as possible to the part to limit ESR. Current-carrying traces need to have widths appropriate for the amount of current the traces are carrying. In the case of the TLA431, the currents must be low.

9.5.2 Layout Example

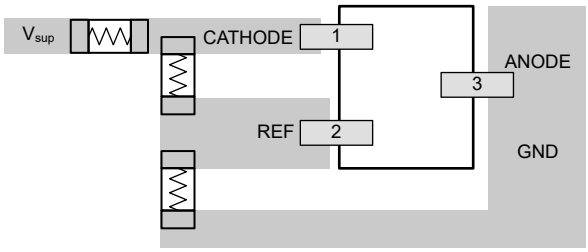

Figure 9-11. TLA431 DBZ Layout Example

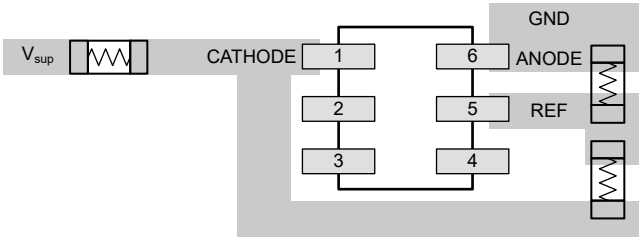

Figure 9-12. TLA431 DRL Layout Example

Copyright © 2026 Texas Instruments Incorporated

10 Device and Documentation Support

10.1 Device Nomenclature

TI assigns suffixes and prefixes to differentiate all the combinations of the TLA43x family. The Eco Plan designator is a legacy designator that was used to differentiate Pb-free and Green devices. More details and possible orderable combinations are located on the Package Option Addendum in Mechanical, Packaging, and Orderable Information.

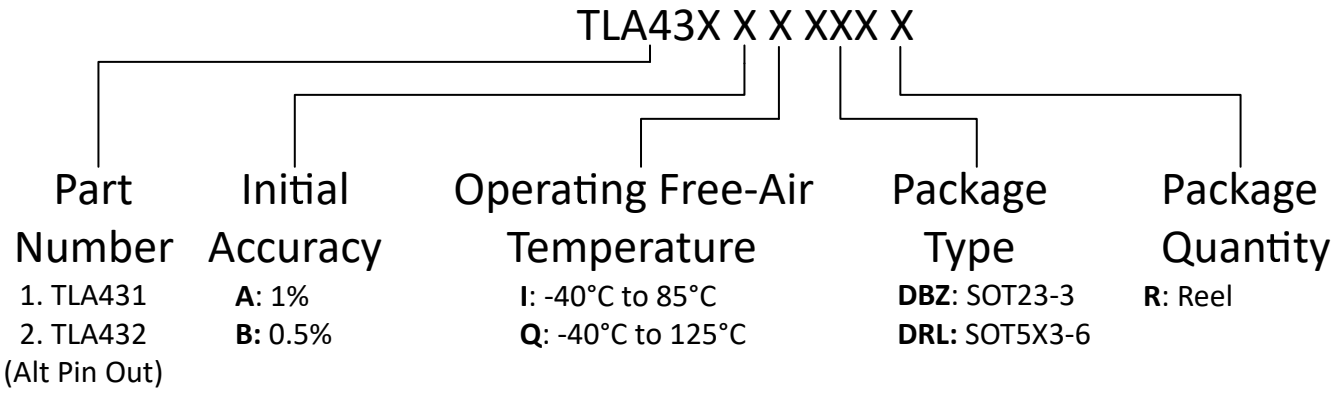

10.2 Documentation Support

10.2.1 Related Documentation

- Texas Instruments, *Setting the Shunt Voltage on an Adjustable Shunt Regulator* application note
- Texas Instruments, *Voltage reference selection basics* white paper

10.3 Receiving Notification of Documentation Updates

To receive notification of documentation updates, navigate to the device product folder on ti.com. Click on *Notifications* to register and receive a weekly digest of any product information that has changed. For change details, review the revision history included in any revised document.

10.4 Support Resources

TI E2E™ support forums are an engineer's go-to source for fast, verified answers and design help — straight from the experts. Search existing answers or ask your own question to get the quick design help you need.

Linked content is provided "AS IS" by the respective contributors. They do not constitute TI specifications and do not necessarily reflect TI's views; see TI's Terms of Use.

10.5 Trademarks

TI E2E™ is a trademark of Texas Instruments.
All trademarks are the property of their respective owners.

10.6 Electrostatic Discharge Caution



This integrated circuit can be damaged by ESD. Texas Instruments recommends that all integrated circuits be handled with appropriate precautions. Failure to observe proper handling and installation procedures can cause damage.

ESD damage can range from subtle performance degradation to complete device failure. Precision integrated circuits may be more susceptible to damage because very small parametric changes could cause the device not to meet its published specifications.

10.7 Glossary

TI Glossary	This glossary lists and explains terms, acronyms, and definitions.

11 Revision History

NOTE: Page numbers for previous revisions may differ from page numbers in the current version.

Copyright © 2026 Texas Instruments Incorporated

Changes from Revision C (December 2025) to Revision D (June 2026)	Page
• Added B-grade DRL information	1
• Added B-grade DRL information	3
• Added V_{ref} for TLA43xBx devices to the electrical characteristics	6
• Added B-grade accuracy to Device Nomenclature	22

Changes from Revision B (November 2025) to Revision C (December 2025)	Page
• Added DRL package ESD ratings	5

12 Mechanical, Packaging, and Orderable Information

The following pages include mechanical packaging and orderable information. This information is the most current data available for the designated devices. This data is subject to change without notice and revision of this document. For browser based versions of this data sheet, refer to the left hand navigation.

Copyright © 2026 Texas Instruments Incorporated

PACKAGING INFORMATION

Orderable part number	Status (1)	Material type (2)	Package | Pins	Package qty | Carrier	RoHS (3)	Lead finish/ Ball material (4)	MSL rating/ Peak reflow (5)	Op temp (°C)	Part marking (6)
TLA431AIDBZR	Active	Production	SOT-23 (DBZ) | 3	3000 | LARGE T&R	Yes	NIPDAU	Level-1-260C-UNLIM	-40 to 85	3KVF
TLA431AIDBZR.A	Active	Production	SOT-23 (DBZ) | 3	3000 | LARGE T&R	Yes	NIPDAU	Level-1-260C-UNLIM	-40 to 85	3KVF
TLA431AIDRLR	Active	Production	SOT-5X3 (DRL) | 6	4000 | LARGE T&R	Yes	SN	Level-1-260C-UNLIM	-40 to 125	3SUF
TLA431AQDBZR	Active	Production	SOT-23 (DBZ) | 3	3000 | LARGE T&R	Yes	NIPDAU	Level-1-260C-UNLIM	-40 to 125	3KWF
TLA431AQDBZR.A	Active	Production	SOT-23 (DBZ) | 3	3000 | LARGE T&R	Yes	NIPDAU	Level-1-260C-UNLIM	-40 to 125	3KWF
TLA431AQDRLR	Active	Production	SOT-5X3 (DRL) | 6	4000 | LARGE T&R	Yes	SN	Level-1-260C-UNLIM	-40 to 125	3SSF
TLA431BIDRLR	Active	Production	SOT-5X3 (DRL) | 6	4000 | LARGE T&R	Yes	SN	Level-1-260C-UNLIM	-40 to 125	3STF
TLA431BQDRLR	Active	Production	SOT-5X3 (DRL) | 6	4000 | LARGE T&R	Yes	SN	Level-1-260C-UNLIM	-40 to 125	3SRF
TLA432AIDBZR	Active	Production	SOT-23 (DBZ) | 3	3000 | LARGE T&R	Yes	NIPDAU	Level-1-260C-UNLIM	-40 to 85	3KXF
TLA432AIDBZR.A	Active	Production	SOT-23 (DBZ) | 3	3000 | LARGE T&R	Yes	NIPDAU	Level-1-260C-UNLIM	-40 to 85	3KXF
TLA432AQDBZR	Active	Production	SOT-23 (DBZ) | 3	3000 | LARGE T&R	Yes	NIPDAU	Level-1-260C-UNLIM	-40 to 125	3KZF
TLA432AQDBZR.A	Active	Production	SOT-23 (DBZ) | 3	3000 | LARGE T&R	Yes	NIPDAU	Level-1-260C-UNLIM	-40 to 125	3KZF

(1) **Status:** For more details on status, see our product life cycle.

(2) **Material type:** When designated, preproduction parts are prototypes/experimental devices, and are not yet approved or released for full production. Testing and final process, including without limitation quality assurance, reliability performance testing, and/or process qualification, may not yet be complete, and this item is subject to further changes or possible discontinuation. If available for ordering, purchases will be subject to an additional waiver at checkout, and are intended for early internal evaluation purposes only. These items are sold without warranties of any kind.

(3) **RoHS values:** Yes, No, RoHS Exempt. See the TI RoHS Statement for additional information and value definition.

(4) **Lead finish/Ball material:** Parts may have multiple material finish options. Finish options are separated by a vertical ruled line. Lead finish/Ball material values may wrap to two lines if the finish value exceeds the maximum column width.

(5) **MSL rating/Peak reflow:** The moisture sensitivity level ratings and peak solder (reflow) temperatures. In the event that a part has multiple moisture sensitivity ratings, only the lowest level per JEDEC standards is shown. Refer to the shipping label for the actual reflow temperature that will be used to mount the part to the printed circuit board.

(6) **Part marking:** There may be an additional marking, which relates to the logo, the lot trace code information, or the environmental category of the part.

Multiple part markings will be inside parentheses. Only one part marking contained in parentheses and separated by a "~" will appear on a part. If a line is indented then it is a continuation of the previous line and the two combined represent the entire part marking for that device.

Important Information and Disclaimer: The information provided on this page represents TI's knowledge and belief as of the date that it is provided. TI bases its knowledge and belief on information provided by third parties, and makes no representation or warranty as to the accuracy of such information. Efforts are underway to better integrate information from third parties. TI has taken and continues to take reasonable steps to provide representative and accurate information but may not have conducted destructive testing or chemical analysis on incoming materials and chemicals. TI and TI suppliers consider certain information to be proprietary, and thus CAS numbers and other limited information may not be available for release.

In no event shall TI's liability arising out of such information exceed the total purchase price of the TI part(s) at issue in this document sold by TI to Customer on an annual basis.

TAPE AND REEL INFORMATION

REEL DIMENSIONS

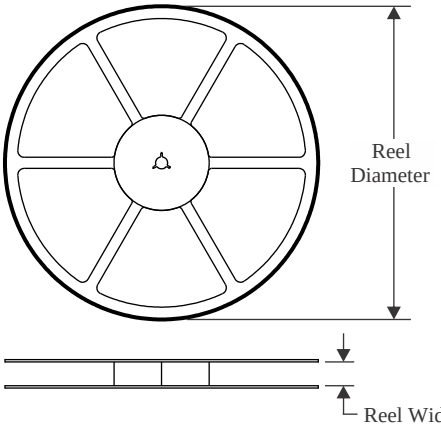

TAPE DIMENSIONS

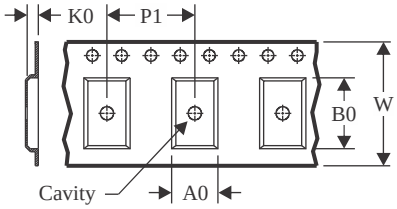

A0	Dimension designed to accommodate the component width
B0	Dimension designed to accommodate the component length
K0	Dimension designed to accommodate the component thickness
W	Overall width of the carrier tape
P1	Pitch between successive cavity centers

QUADRANT ASSIGNMENTS FOR PIN 1 ORIENTATION IN TAPE

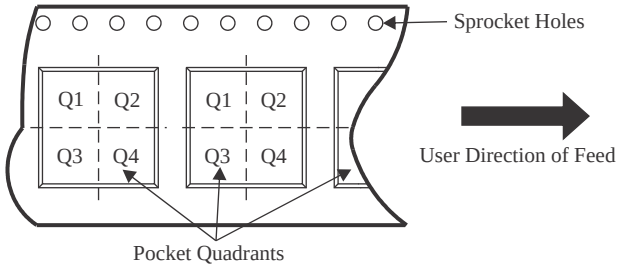

*All dimensions are nominal

Device	Package Type	Package Drawing	Pins	SPQ	Reel Diameter (mm)	Reel Width W1 (mm)	A0 (mm)	B0 (mm)	K0 (mm)	P1 (mm)	W (mm)	Pin1 Quadrant
TLA431AIDBZR	SOT-23	DBZ	3	3000	180.0	8.4	2.9	3.35	1.35	4.0	8.0	Q3
TLA431AIDRLR	SOT-5X3	DRL	6	4000	180.0	8.4	1.8	1.8	0.75	4.0	8.0	Q3
TLA431AQDBZR	SOT-23	DBZ	3	3000	180.0	8.4	2.9	3.35	1.35	4.0	8.0	Q3
TLA431AQDRLR	SOT-5X3	DRL	6	4000	180.0	8.4	1.8	1.8	0.75	4.0	8.0	Q3
TLA432AIDBZR	SOT-23	DBZ	3	3000	180.0	8.4	2.9	3.35	1.35	4.0	8.0	Q3
TLA432AQDBZR	SOT-23	DBZ	3	3000	180.0	8.4	2.9	3.35	1.35	4.0	8.0	Q3

TAPE AND REEL BOX DIMENSIONS

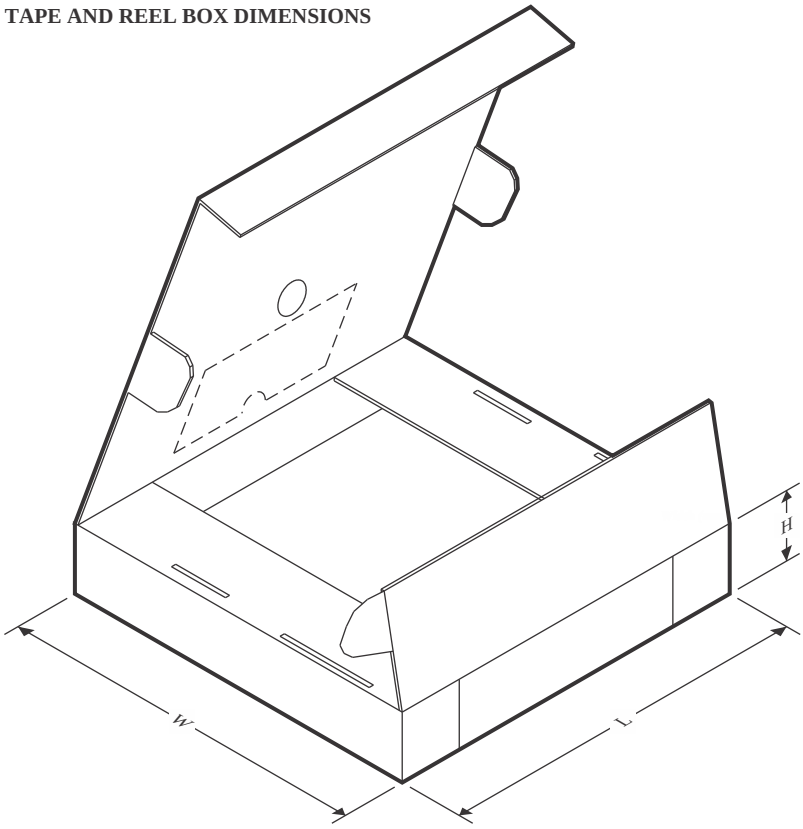

*All dimensions are nominal

Device	Package Type	Package Drawing	Pins	SPQ	Length (mm)	Width (mm)	Height (mm)
TLA431AIDBZR	SOT-23	DBZ	3	3000	210.0	185.0	35.0
TLA431AIDRLR	SOT-5X3	DRL	6	4000	210.0	185.0	35.0
TLA431AQDBZR	SOT-23	DBZ	3	3000	210.0	185.0	35.0
TLA431AQDRLR	SOT-5X3	DRL	6	4000	210.0	185.0	35.0
TLA432AIDBZR	SOT-23	DBZ	3	3000	210.0	185.0	35.0
TLA432AQDBZR	SOT-23	DBZ	3	3000	210.0	185.0	35.0

PACKAGE OUTLINE

DBZ0003A



SOT-23 - 1.12 mm max height

SMALL OUTLINE TRANSISTOR

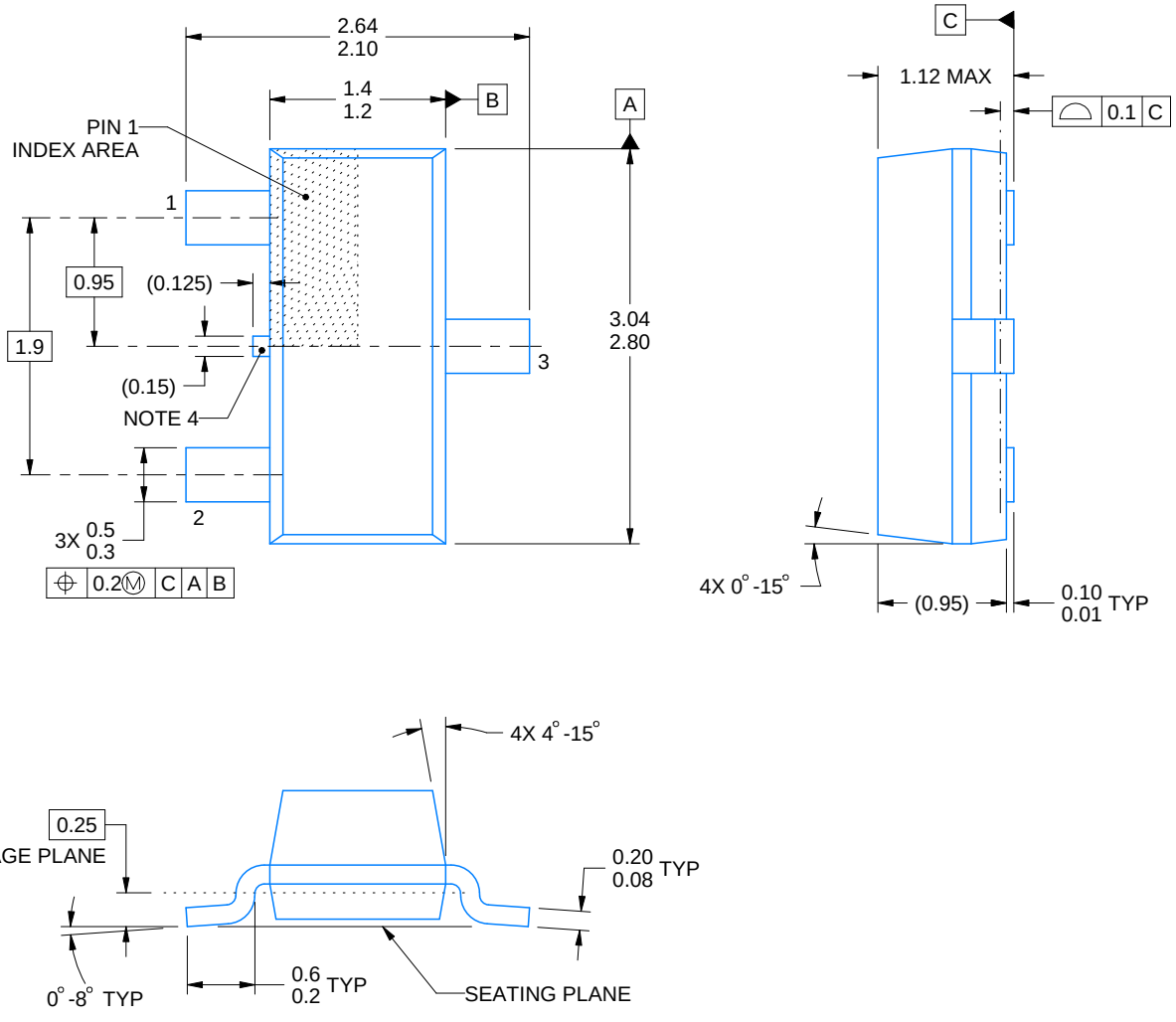

4214838/F 08/2024

NOTES:

1. All linear dimensions are in millimeters. Any dimensions in parenthesis are for reference only. Dimensioning and tolerancing per ASME Y14.5M.
2. This drawing is subject to change without notice.
3. Reference JEDEC registration TO-236, except minimum foot length.
4. Support pin may differ or may not be present.
5. Body dimensions do not include mold flash, protrusions, or gate burrs. Mold flash, protrusions, or gate burrs shall not exceed 0.25mm per side

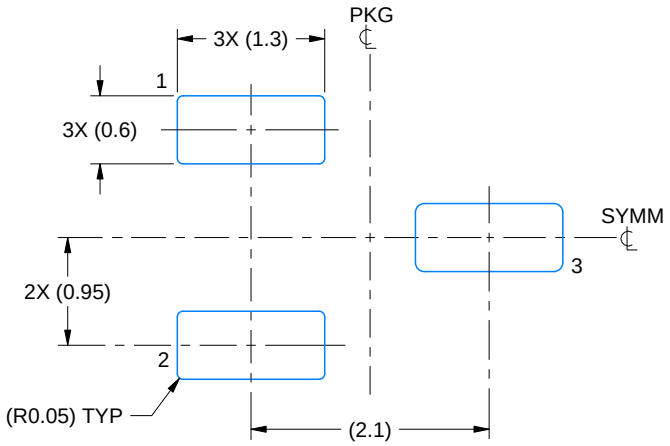

LAND PATTERN EXAMPLE
SCALE:15X

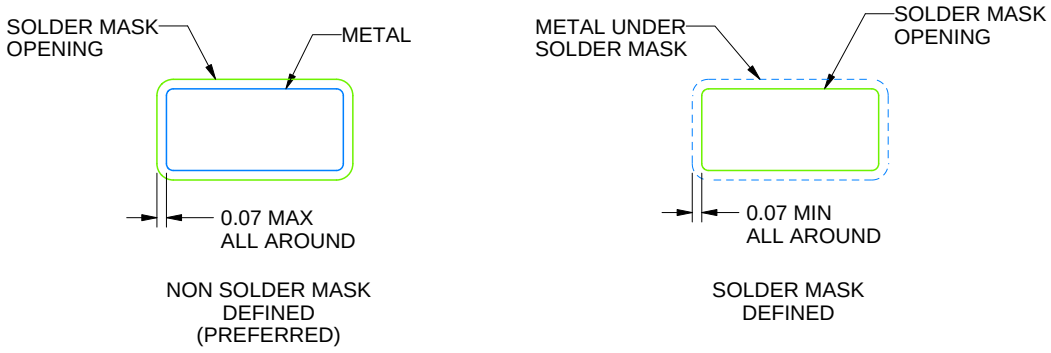

SOLDER MASK DETAILS

4214838/F 08/2024

NOTES: (continued)

5. Publication IPC-7351 may have alternate designs.
6. Solder mask tolerances between and around signal pads can vary based on board fabrication site.

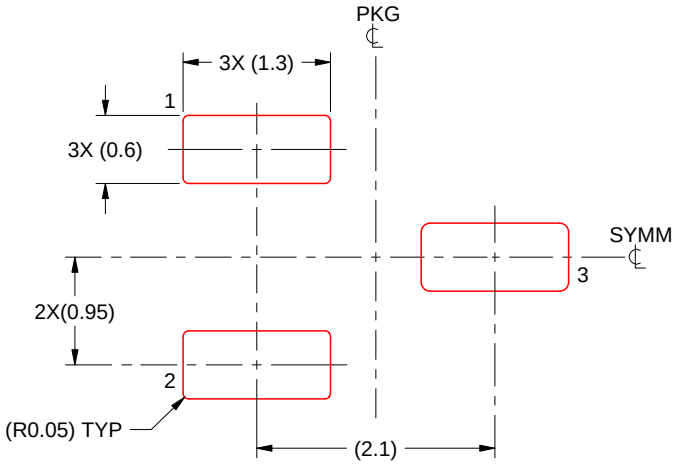

SOLDER PASTE EXAMPLE
BASED ON 0.125 THICK STENCIL
SCALE:15X

4214838/F 08/2024

NOTES: (continued)

7. Laser cutting apertures with trapezoidal walls and rounded corners may offer better paste release. IPC-7525 may have alternate design recommendations.
8. Board assembly site may have different recommendations for stencil design.



PACKAGE OUTLINE

DRL0006A

SOT - 0.6 mm max height

PLASTIC SMALL OUTLINE

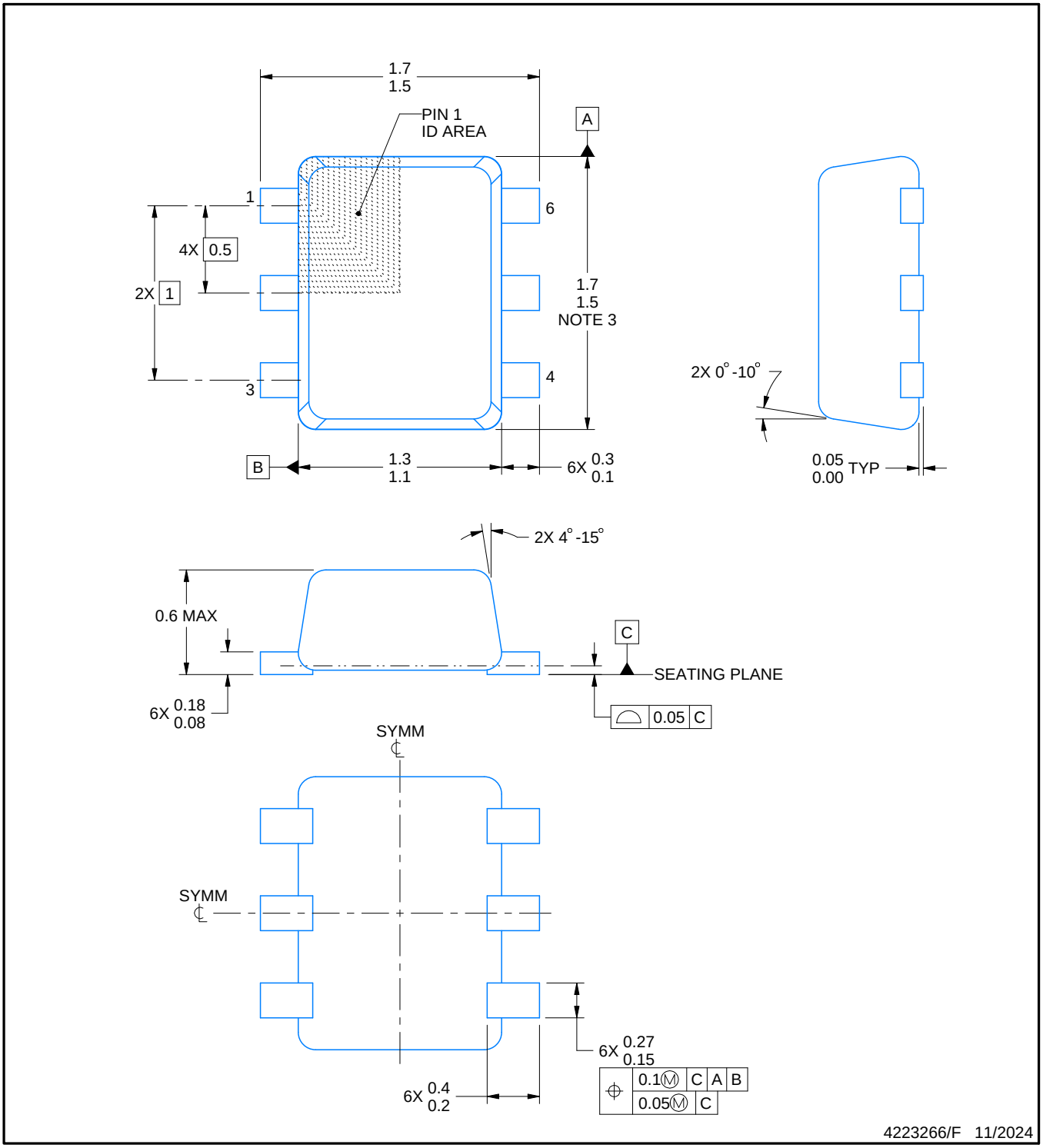

NOTES:

1. All linear dimensions are in millimeters. Any dimensions in parenthesis are for reference only. Dimensioning and tolerancing per ASME Y14.5M.
2. This drawing is subject to change without notice.
3. This dimension does not include mold flash, protrusions, or gate burrs. Mold flash, protrusions, or gate burrs shall not exceed 0.15 mm per side.
4. Reference JEDEC registration MO-293 Variation UAAD

EXAMPLE BOARD LAYOUT

DRL0006A

SOT - 0.6 mm max height

PLASTIC SMALL OUTLINE

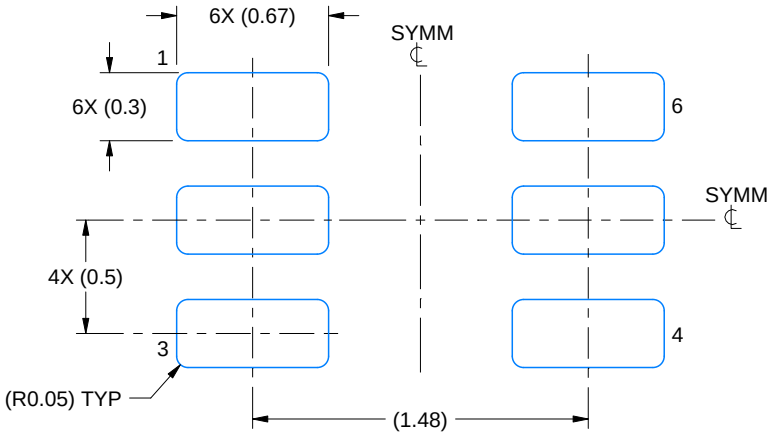

LAND PATTERN EXAMPLE
SCALE:30X

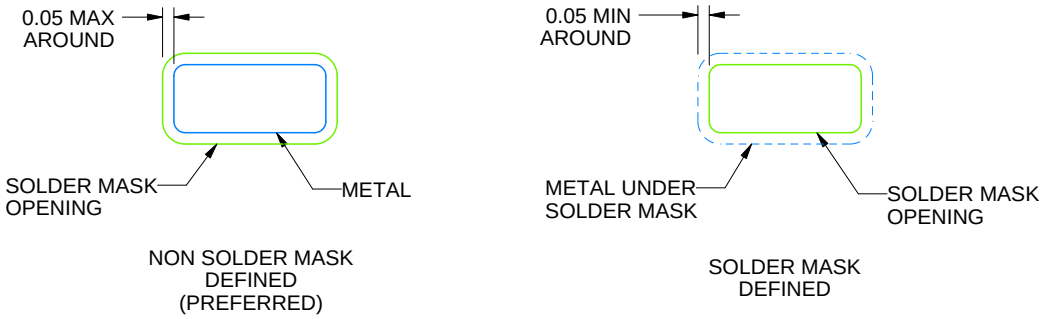

SOLDERMASK DETAILS

4223266/F 11/2024

NOTES: (continued)

5. Publication IPC-7351 may have alternate designs.
6. Solder mask tolerances between and around signal pads can vary based on board fabrication site.
7. Land pattern design aligns to IPC-610, Bottom Termination Component (BTC) solder joint inspection criteria.

EXAMPLE STENCIL DESIGN

DRL0006A

SOT - 0.6 mm max height

PLASTIC SMALL OUTLINE

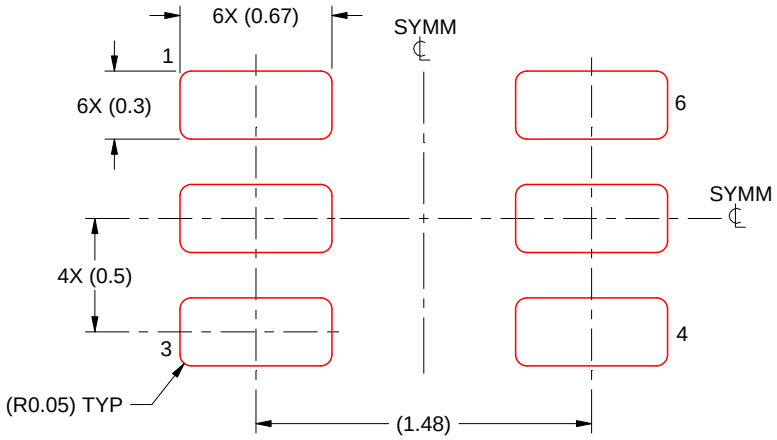

SOLDER PASTE EXAMPLE
BASED ON 0.1 mm THICK STENCIL
SCALE:30X

4223266/F 11/2024

NOTES: (continued)

8. Laser cutting apertures with trapezoidal walls and rounded corners may offer better paste release. IPC-7525 may have alternate design recommendations.
9. Board assembly site may have different recommendations for stencil design.

IMPORTANT NOTICE AND DISCLAIMER

TI PROVIDES TECHNICAL AND RELIABILITY DATA (INCLUDING DATASHEETS), DESIGN RESOURCES (INCLUDING REFERENCE DESIGNS), APPLICATION OR OTHER DESIGN ADVICE, WEB TOOLS, SAFETY INFORMATION, AND OTHER RESOURCES “AS IS” AND WITH ALL FAULTS, AND DISCLAIMS ALL WARRANTIES, EXPRESS AND IMPLIED, INCLUDING WITHOUT LIMITATION ANY IMPLIED WARRANTIES OF MERCHANTABILITY, FITNESS FOR A PARTICULAR PURPOSE OR NON-INFRINGEMENT OF THIRD PARTY INTELLECTUAL PROPERTY RIGHTS.

These resources are intended for skilled developers designing with TI products. You are solely responsible for (1) selecting the appropriate TI products for your application, (2) designing, validating and testing your application, and (3) ensuring your application meets applicable standards, and any other safety, security, regulatory or other requirements.

These resources are subject to change without notice. TI grants you permission to use these resources only for development of an application that uses the TI products described in the resource. Other reproduction and display of these resources is prohibited. No license is granted to any other TI intellectual property right or to any third party intellectual property right. TI disclaims responsibility for, and you fully indemnify TI and its representatives against any claims, damages, costs, losses, and liabilities arising out of your use of these resources.

TI’s products are provided subject to TI’s Terms of Sale, TI’s General Quality Guidelines, or other applicable terms available either on ti.com or provided in conjunction with such TI products. TI’s provision of these resources does not expand or otherwise alter TI’s applicable warranties or warranty disclaimers for TI products. Unless TI explicitly designates a product as custom or customer-specified, TI products are standard, catalog, general purpose devices.

TI objects to and rejects any additional or different terms you may propose.

Copyright © 2026, Texas Instruments Incorporated

Last updated 10/2025