# FAMILY OF WIDE-BANDWIDTH HIGH-OUTPUT-DRIVE SINGLE SUPPLY OPERATIONAL AMPLIFIERS

**Check for Samples: TLC080 , TLC081, TLC082, TLC083, TLC084, TLC085, TLC08xA**

## FEATURES

- **Wide Bandwidth: 10 MHz**
- **High Output Drive:**
  - **$I_{OH}$: 57 mA at $V_{DD}$ – 1.5 V**
  - **$I_{OL}$: 55 mA at 0.5 V**
- **High Slew Rate:**
  - **SR+: 16 V/µs**
  - **SR–: 19 V/µs**
- **Wide Supply Range: 4.5 V to 16 V**
- **Supply Current: 1.9 mA/Channel**
- **Ultralow Power Shutdown Mode:**
  - **$I_{DD}$: 125 µA/Channel**
- **Low Input Noise Voltage: 8.5 nV/√Hz**
- **Input Offset Voltage: 60 µV**
- **Ultra-Small Packages:**
  - **8- or 10-Pin MSOP (TLC080/1/2/3)**

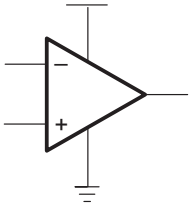

## DESCRIPTION

The first members of TI's new BiMOS general-purpose operational amplifier family are the TLC08x. The BiMOS family concept is simple: provide an upgrade path for BiFET users who are moving away from dual-supply to single-supply systems and demand higher ac and dc performance. With performance rated from 4.5 V to 16 V across commercial (0°C to 70°C) and an extended industrial temperature range (–40°C to 125°C), BiMOS suits a wide range of audio, automotive, industrial, and instrumentation applications. Familiar features like offset nulling pins, and new features like MSOP PowerPAD™ packages and shutdown modes, enable higher levels of performance in a variety of applications.

Developed in TI's patented LBC3 BiCMOS process, the new BiMOS amplifiers combine a very high input impedance, low-noise CMOS front end with a high-drive bipolar output stage, thus providing the optimum performance features of both. AC performance improvements over the TL08x BiFET predecessors include a bandwidth of 10 MHz (an increase of 300%) and voltage noise of 8.5 nV/√Hz (an improvement of 60%). DC improvements include an ensured $V_{ICR}$ that includes ground, a factor of 4 reduction in input offset voltage down to 1.5 mV (maximum) in the standard grade, and a power supply rejection improvement of greater than 40 dB to 130 dB. Added to this list of impressive features is the ability to drive ±50-mA loads comfortably from an ultrasmall-footprint MSOP PowerPAD package, which positions the TLC08x as the ideal high-performance general-purpose operational amplifier family.

### FAMILY PACKAGE TABLE

| DEVICE | NO. OF CHANNELS | PACKAGE TYPES | | | | | UNIVERSAL EVM BOARD |
|---|---|---|---|---|---|---|---|
| | | MSOP | PDIP | SOIC | TSSOP | SHUTDOWN | |
| TLC080 | 1 | 8 | 8 | 8 | — | Yes | Refer to the EVM Selection Guide (Lit# SLOU060) |
| TLC081 | 1 | 8 | 8 | 8 | — | | |
| TLC082 | 2 | 8 | 8 | 8 | — | — | |
| TLC083 | 2 | 10 | 14 | 14 | — | Yes | |
| TLC084 | 4 | | 14 | 14 | 20 | — | |
| TLC085 | 4 | | 16 | 16 | 20 | Yes | |

Please be aware that an important notice concerning availability, standard warranty, and use in critical applications of Texas Instruments semiconductor products and disclaimers thereto appears at the end of this data sheet.

PowerPAD is a trademark of Texas Instruments.
All other trademarks are the property of their respective owners.

PRODUCTION DATA information is current as of publication date. Products conform to specifications per the terms of the Texas Instruments standard warranty. Production processing does not necessarily include testing of all parameters.

Copyright © 1999–2011, Texas Instruments Incorporated

## TLC080 and TLC081 AVAILABLE OPTIONS

| $T_A$ | PACKAGED DEVICES | | | |
|---|---|---|---|---|
| | SMALL OUTLINE (D)(1) | SMALL OUTLINE (DGN)(1) | SYMBOL | PLASTIC DIP (P) |
| 0°C to 70°C | TLC080CD | TLC080CDGN | xxTIACW | TLC080CP |
| | TLC081CD | TLC081CDGN | xxTIACY | TLC081CP |
| –40°C to 125°C | TLC080ID | TLC080IDGN | xxTIACX | TLC080IP |
| | TLC081ID | TLC081IDGN | xxTIACZ | TLC081IP |
| | TLC080AID | — | — | TLC080AIP |
| | TLC081AID | — | — | TLC081AIP |

(1) This package is available taped and reeled. To order this packaging option, add an R suffix to the part number (e.g., TLC080CDR).

## TLC082 and TLC083 AVAILABLE OPTIONS

| $T_A$ | PACKAGED DEVICES | | | | | | |
|---|---|---|---|---|---|---|---|
| | SMALL OUTLINE (D)(1) | MSOP | | | | PLASTIC DIP (N) | PLASTIC DIP (P) |
| | | (DGN)(1) | SYMBOL(2) | (DGQ)(1) | SYMBOL(2) | | |
| 0°C to 70°C | TLC082CD | TLC082CDGN | xxTIADZ | — | — | — | TLC082CP |
| | TLC083CD | — | — | TLC083CDGQ | xxTIAEB | TLC083CN | — |
| –40°C to 125°C | TLC082ID | TLC082IDGN | xxTIAEA | — | — | — | TLC082IP |
| | TLC083ID | — | — | TLC083IDGQ | xxTIAEC | TLC083IN | — |
| | TLC082AID | — | — | — | — | — | TLC082AIP |
| | TLC083AID | — | — | — | — | TLC083AIN | — |

(1) This package is available taped and reeled. To order this packaging option, add an R suffix to the part number (e.g., TLC082CDR).
(2) xx represents the device date code.

## TLC084 and TLC085 AVAILABLE OPTIONS

| $T_A$ | PACKAGED DEVICES | | |
|---|---|---|---|
| | SMALL OUTLINE (D)(1) | PLASTIC DIP (N) | TSSOP (PWP)(1) |
| 0°C to 70°C | TLC084CD | TLC084CN | TLC084CPWP |
| | TLC085CD | TLC085CN | TLC085CPWP |
| –40°C to 125°C | TLC084ID | TLC084IN | TLC084IPWP |
| | TLC085ID | TLC085IN | TLC085IPWP |
| | TLC084AID | TLC084AIN | TLC084AIPWP |
| | TLC085AID | TLC085AIN | TLC085AIPWP |

(1) This package is available taped and reeled. To order this packaging option, add an R suffix to the part number (e.g., TLC084CDR).

For the most current package and ordering information, see the Package Option Addendum at the end of this data sheet, or see the TI web site at www.ti.com.


Copyright © 1999–2011, Texas Instruments Incorporated

**TLC080**
**D, DGN, OR P PACKAGE**
**(TOP VIEW)**

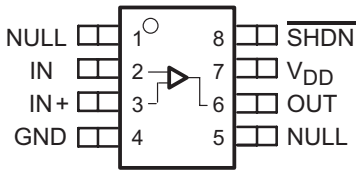


**TLC081**
**D, DGN, OR P PACKAGE**
**(TOP VIEW)**

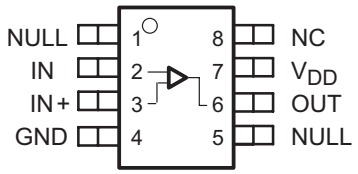


**TLC082**
**D, DGN, OR P PACKAGE**
**(TOP VIEW)**

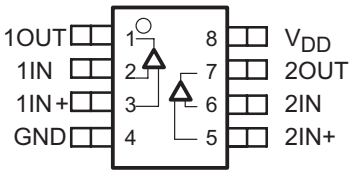


**TLC083**
**DGQ PACKAGE**
**(TOP VIEW)**

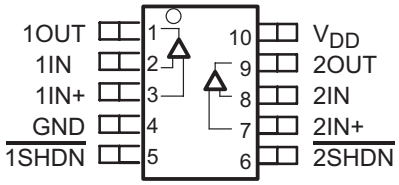


**TLC083**
**D OR N PACKAGE**
**(TOP VIEW)**

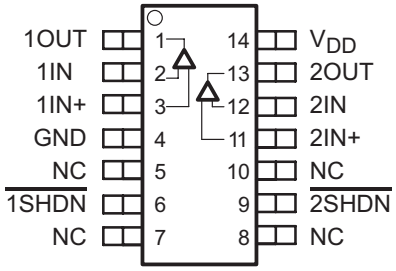


**TLC084**
**D OR N PACKAGE**
**(TOP VIEW)**

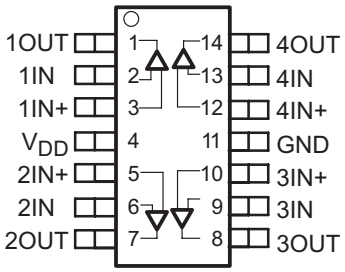


**TLC084**
**PWP PACKAGE**
**(TOP VIEW)**

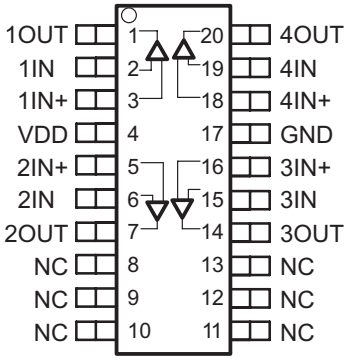


**TLC085**
**D OR N PACKAGE**
**(TOP VIEW)**

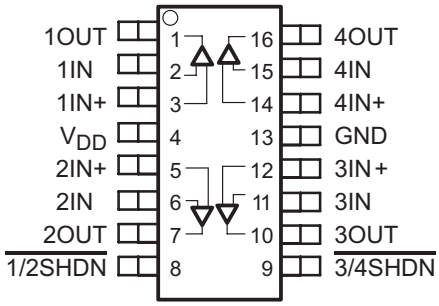


**TLC085**
**PWP PACKAGE**
**(TOP VIEW)**

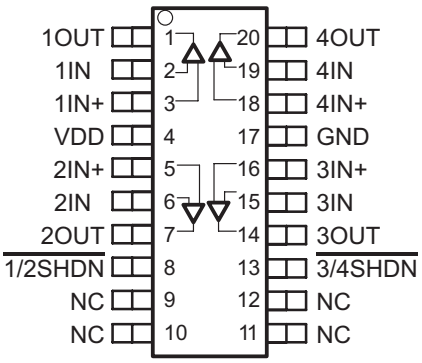


NC - No internal connection

**TYPICAL PIN 1 INDICATORS**

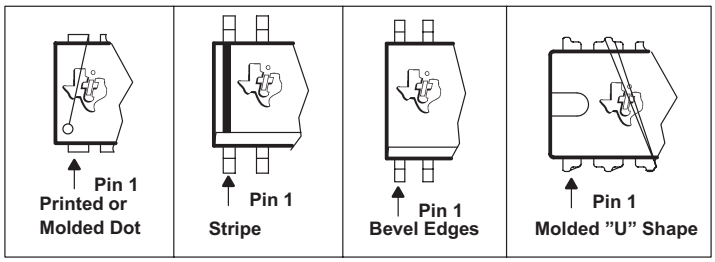

## ABSOLUTE MAXIMUM RATINGS

over operating free-air temperature range (unless otherwise noted)[1]

| | | VALUE | UNIT |
|---|---|---|---|
| Supply voltage, $V_{DD}$[2] | | 17 | V |
| Differential input voltage range, $V_{ID}$ | | ±VDD | |
| Continuous total power dissipation | | See Dissipation Rating Table | |
| Operating free-air temperature range, $T_A$: | C suffix | 0 to 70 | °C |
| | I suffix | −40 to 125 | °C |
| Maximum junction temperature, $T_J$ | | 150 | °C |
| Storage temperature range, $T_{stg}$ | | –65 to 150 | °C |
| Lead temperature 1,6 mm (1/16 inch) from case for 10 seconds | | 260 | °C |

(1) Stresses beyond those listed under "absolute maximum ratings" may cause permanent damage to the device. These are stress ratings only, and functional operation of the device at these or any other conditions beyond those indicated under "recommended operating conditions" is not implied. Exposure to absolute-maximum-rated conditions for extended periods may affect device reliability.
(2) All voltage values, except differential voltages, are with respect to GND .

## DISSIPATION RATING TABLE

| PACKAGE | $\theta_{JC}$ (°C/W) | $\theta_{JA}$ (°C/W) | $T_A \le 25°C$ POWER RATING |
|---|---|---|---|
| D (8) | 38.3 | 176 | 710 mW |
| D (14) | 26.9 | 122.3 | 1022 mW |
| D (16) | 25.7 | 114.7 | 1090 mW |
| DGN (8) | 4.7 | 52.7 | 2.37 W |
| DGQ (10) | 4.7 | 52.3 | 2.39 W |
| N (14, 16) | 32 | 78 | 1600 mW |
| P (8) | 41 | 104 | 1200 mW |
| PWP (20) | 1.40 | 26.1 | 4.79 W |

## RECOMMENDED OPERATING CONDITIONS

| | | MIN | MAX | UNIT |
|---|---|---|---|---|
| Supply voltage, $V_{DD}$ | Single supply | 4.5 | 16 | V |
| | Split supply | ±2.25 | ±8 | |
| Common-mode input voltage, $V_{ICR}$ | | GND | $V_{DD}$–2 | V |
| Shutdown on/off voltage level[1] | $V_{IH}$ | 2 | | V |
| | $V_{IL}$ | | 0.8 | |
| Operating free-air temperature, $T_A$ | C-suffix | 0 | 70 | °C |
| | I-suffix | –40 | 125 | |

(1) Relative to the voltage on the GND terminal of the device.


Copyright © 1999–2011, Texas Instruments Incorporated

## ELECTRICAL CHARACTERISTICS

at specified free-air temperature, $V_{DD}$ = 5 V (unless otherwise noted)

| PARAMETER | | TEST CONDITIONS | | TA(1) | MIN | TYP | MAX | UNIT |
|---|---|---|---|---|---|---|---|---|
| $V_{IO}$ | Input offset voltage | $V_{DD}$ = 5 V, $V_{IC}$ = 2.5 V, $V_O$ = 2.5 V, $R_S$ = 50 Ω | TLC080/1/2/3, TLC084/5 | 25°C | | 390 | 1900 | μV |
| | | | | Full range | | | 3000 | |
| | | | TLC080/1/2/3A, TLC084/5A | 25°C | | 390 | 1400 | |
| | | | | Full range | | | 2000 | |
| $\propto V_{IO}$ | Temperature coefficient of input offset voltage | $V_{DD}$ = 5 V, $V_{IC}$ = 2.5 V, $V_O$ = 2.5 V, $R_S$ = 50 Ω | | | | 1.2 | | μV/°C |
| $I_{IO}$ | Input offset current | $V_{DD}$ = 5 V, $V_{IC}$ = 2.5 V, $V_O$ = 2.5 V, $R_S$ = 50 Ω | | 25°C | | 1.9 | 50 | pA |
| | | | TLC08XC | Full range | | | 100 | |
| | | | TLC08XI | | | | 700 | |
| $I_{IB}$ | Input bias current | | | 25°C | | 3 | 50 | pA |
| | | | TLC08XC | Full range | | | 100 | |
| | | | TLC08XI | | | | 700 | |
| $V_{ICR}$ | Common-mode input voltage | $R_S$ = 50 Ω | | 25°C | 0 to 3.0 | 0 to 3.5 | | V |
| | | | | Full range | 0 to 3.0 | 0 to 3.5 | | |
| $V_{OH}$ | High-level output voltage | $V_{IC}$ = 2.5 V | $I_{OH}$ = –1 mA | 25°C | 4.1 | 4.3 | | V |
| | | | | Full range | 3.9 | | | |
| | | | $I_{OH}$ = –20 mA | 25°C | 3.7 | 4 | | |
| | | | | Full range | 3.5 | | | |
| | | | $I_{OH}$ = –35 mA | 25°C | 3.4 | 3.8 | | |
| | | | | Full range | 3.2 | | | |
| | | | $I_{OH}$ = –50 mA | 25°C | 3.2 | 3.6 | | |
| | | | | –40°C to 85°C | 3 | | | |
| $V_{OL}$ | Low-level output voltage | $V_{IC}$ = 2.5 V | $I_{OL}$ = 1 mA | 25°C | | 0.18 | 0.25 | V |
| | | | | Full range | | | 0.35 | |
| | | | $I_{OL}$ = 20 mA | 25°C | | 0.35 | 0.39 | |
| | | | | Full range | | | 0.45 | |
| | | | $I_{OL}$ = 35 mA | 25°C | | 0.43 | 0.55 | |
| | | | | Full range | | | 0.7 | |
| | | | $I_{OL}$ = 50 mA | 25°C | | 0.45 | 0.63 | |
| | | | | –40°C to 85°C | | | 0.7 | |
| $I_{OS}$ | Short-circuit output current | Sourcing | | 25°C | | 100 | | mA |
| | | Sinking | | 25°C | | 100 | | |
| $I_O$ | Output current | $V_{OH}$ = 1.5 V from positive rail | | 25°C | | 57 | | mA |
| | | $V_{OL}$ = 0.5 V from negative rail | | 25°C | | 55 | | |
| $A_{VD}$ | Large-signal differential voltage amplification | $V_{O(PP)}$ = 3 V, | $R_L$ = 10 kΩ | 25°C | 100 | 120 | | dB |
| | | | | Full range | 100 | | | |
| $r_{i(d)}$ | Differential input resistance | | | 25°C | | 1000 | | GΩ |
| $C_{IC}$ | Common-mode input capacitance | f = 10 kHz | | 25°C | | 22.9 | | pF |
| $z_o$ | Closed-loop output impedance | f = 10 kHz, | $A_V$ = 10 | 25°C | | 0.25 | | Ω |
| CMRR | Common-mode rejection ratio | $V_{IC}$ = 0 to 3 V, | $R_S$ = 50 Ω | 25°C | 80 | 110 | | dB |
| | | | | Full range | 80 | | | |
| $k_{SVR}$ | Supply voltage rejection ratio ($\Delta V_{DD}$ /$\Delta V_{IO}$) | $V_{DD}$ = 4.5 V to 16 V, No load | $V_{IC}$ = $V_{DD}$/2, | 25°C | 80 | 100 | | dB |
| | | | | Full range | 80 | | | |

(1) Full range is 0°C to 70°C for C suffix and –40°C to 125°C for I suffix. If not specified, full range is –40°C to 125°C.

Copyright © 1999–2011, Texas Instruments Incorporated

## ELECTRICAL CHARACTERISTICS (continued)

at specified free-air temperature, $V_{DD}$ = 5 V (unless otherwise noted)

| PARAMETER | | TEST CONDITIONS | | TA (1) | MIN | TYP | MAX | UNIT |
|---|---|---|---|---|---|---|---|---|
| $I_{DD}$ | Supply current (per channel) | $V_O$ = 2.5 V, | No load | 25°C | | 1.8 | 2.5 | mA |
| | | | | Full range | | | 3.5 | |
| $I_{DD(SHDN)}$ | Supply current in shutdown mode (per channel) (TLC080, TLC083, TLC085) | $\overline{SHDN}$ ≤ 0.8 V | | 25°C | | 125 | 200 | µA |
| | | | | Full range | | | 250 | |

## OPERATING CHARACTERISTICS

at specified free-air temperature, $V_{DD}$ = 5 V (unless otherwise noted)

| PARAMETER | | TEST CONDITIONS | | $T_A$ (1) | MIN | TYP | MAX | UNIT |
|---|---|---|---|---|---|---|---|---|
| SR+ | Positive slew rate at unity gain | $V_{O(PP)}$ = 0.8 V, | $C_L$ = 50 pF, | 25°C | 10 | 16 | | V/µs |
| | | $R_L$ = 10 kΩ | | Full range | 9.5 | | | |
| SR– | Negative slew rate at unity gain | $V_{O(PP)}$ = 0.8 V, | $C_L$ = 50 pF, | 25°C | 12.5 | 19 | | V/µs |
| | | $R_L$ = 10 kΩ | | Full range | 10 | | | |
| $V_n$ | Equivalent input noise voltage | f = 100 Hz | | 25°C | | 12 | | nV/√Hz |
| | | f = 1 kHz | | 25°C | | 8.5 | | |
| $I_n$ | Equivalent input noise current | f = 1 kHz | | 25°C | | 0.6 | | fA /√Hz |
| THD + N | Total harmonic distortion plus noise | $V_{O(PP)}$ = 3 V, | $A_V$ = 1 | 25°C | | 0.002 | | % |
| | | $R_L$ = 10 kΩ and 250 Ω, | $A_V$ = 10 | | | 0.012 | | |
| | | f = 1 kHz | $A_V$ = 100 | | | 0.085 | | |
| $t_{(on)}$ | Amplifier turnon time (2) | $R_L$ = 10 kΩ | | 25°C | | 0.15 | | µs |
| $t_{(off)}$ | Amplifier turnoff time (2) | | | 25°C | | 1.3 | | µs |
| | Gain-bandwidth product | f = 10 kHz, | $R_L$ = 10 kΩ | 25°C | | 10 | | MHz |
| $t_s$ | Settling time | $V_{(STEP)PP}$ = 1 V, $A_V$ = −1, $C_L$ = 10 pF, $R_L$ = 10 kΩ | 0.1% | 25°C | | 0.18 | | µs |
| | | | 0.01% | | | 0.39 | | |
| | | $V_{(STEP)PP}$ = 1 V, $A_V$ = –1, $C_L$ = 47 pF, $R_L$ = 10 kΩ | 0.1% | | | 0.18 | | |
| | | | 0.01% | | | 0.39 | | |
| $\varphi_m$ | Phase margin | $R_L$ = 10 kΩ, | $C_L$ = 50 pF | 25°C | | 32 | | ° |
| | | $R_L$ = 10 kΩ, | $C_L$ = 0 pF | | | 40 | | |
| | Gain margin | $R_L$ = 10 kΩ, | $C_L$ = 50 pF | 25°C | | 2.2 | | dB |
| | | $R_L$ = 10 kΩ, | $C_L$ = 0 pF | | | 3.3 | | |

(1) Full range is 0°C to 70°C for C suffix and –40°C to 125°C for I suffix. If not specified, full range is –40°C to 125°C.
(2) Disable time and enable time are defined as the interval between application of the logic signal to SHDN and the point at which the supply current has reached half its final value.


Copyright © 1999–2011, Texas Instruments Incorporated

## ELECTRICAL CHARACTERISTICS

at specified free-air temperature, $V_{DD}$ = 12 V (unless otherwise noted)

| PARAMETER | | TEST CONDITIONS | | TA(1) | MIN | TYP | MAX | UNIT |
|---|---|---|---|---|---|---|---|---|
| $V_{IO}$ | Input offset voltage | $V_{DD}$ = 12 V, $V_{IC}$ = 6 V, $V_O$ = 6 V, $R_S$ = 50 Ω | TLC080/1/2/3, TLC084/5 | 25°C | | 390 | 1900 | μV |
| | | | | Full range | | | 3000 | |
| | | | TLC080/1/2/3A, TLC084/5A | 25°C | | 390 | 1400 | |
| | | | | Full range | | | 2000 | |
| $\propto V_{IO}$ | Temperature coefficient of input offset voltage | $R_S$ = 50 Ω | | | | 1.2 | | μV/°C |
| $I_{IO}$ | Input offset current | $V_{DD}$ = 12 V, $V_{IC}$ = 6 V, $V_O$ = 6 V, $R_S$ = 50 Ω | | 25°C | | 1.5 | 50 | pA |
| | | | TLC08xC | Full range | | | 100 | |
| | | | TLC08xI | | | | 700 | |
| $I_{IB}$ | Input bias current | | | 25°C | | 3 | 50 | pA |
| | | | TLC08xC | Full range | | | 100 | |
| | | | TLC08xI | | | | 700 | |
| $V_{ICR}$ | Common-mode input voltage | $R_S$ = 50 Ω | | 25°C | 0 to 10.0 | 0 to 10.5 | | V |
| | | | | Full range | 0 to 10.0 | 0 to 10.5 | | |
| $V_{OH}$ | High-level output voltage | $V_{IC}$ = 6 V | $I_{OH}$ = –1 mA | 25°C | 11.1 | 11.2 | | V |
| | | | | Full range | 11 | | | |
| | | | $I_{OH}$ = –20 mA | 25°C | 10.8 | 11 | | |
| | | | | Full range | 10.7 | | | |
| | | | $I_{OH}$ = –35 mA | 25°C | 10.6 | 10.7 | | |
| | | | | Full range | 10.3 | | | |
| | | | $I_{OH}$ = –50 mA | 25°C | 10.3 | 10.5 | | |
| | | | | –40°C to 85°C | 10.2 | | | |
| $V_{OL}$ | Low-level output voltage | $V_{IC}$ = 6 V | $I_{OL}$ = 1 mA | 25°C | | 0.17 | 0.25 | V |
| | | | | Full range | | | 0.35 | |
| | | | $I_{OL}$ = 20 mA | 25°C | | 0.35 | 0.45 | |
| | | | | Full range | | | 0.5 | |
| | | | $I_{OL}$ = 35 mA | 25°C | | 0.4 | 0.52 | |
| | | | | Full range | | | 0.6 | |
| | | | $I_{OL}$ = 50 mA | 25°C | | 0.45 | 0.6 | |
| | | | | –40°C to 85°C | | | 0.65 | |
| $I_{OS}$ | Short-circuit output current | Sourcing | | 25°C | | 150 | | mA |
| | | Sinking | | 25°C | | 150 | | |
| $I_O$ | Output current | $V_{OH}$ = 1.5 V from positive rail | | 25°C | | 57 | | mA |
| | | $V_{OL}$ = 0.5 V from negative rail | | 25°C | | 55 | | |
| $A_{VD}$ | Large-signal differential voltage amplification | $V_{O(PP)}$ = 8 V, | $R_L$ = 10 kΩ | 25°C | 120 | 140 | | dB |
| | | | | Full range | 120 | | | |
| $r_{i(d)}$ | Differential input resistance | | | 25°C | | 1000 | | GΩ |
| $C_{IC}$ | Common-mode input capacitance | f = 10 kHz | | 25°C | | 21.6 | | pF |
| $z_o$ | Closed-loop output impedance | f = 10 kHz, | $A_V$ = 10 | 25°C | | 0.25 | | Ω |
| CMRR | Common-mode rejection ratio | $V_{IC}$ = 0 to 10 V, | $R_S$ = 50 Ω | 25°C | 80 | 110 | | dB |
| | | | | Full range | 80 | | | |
| $k_{SVR}$ | Supply voltage rejection ratio ($\Delta V_{DD}$ /$\Delta V_{IO}$) | $V_{DD}$ = 4.5 V to 16 V, No load | $V_{IC}$ = $V_{DD}$/2, | 25°C | 80 | 100 | | dB |
| | | | | Full range | 80 | | | |

(1) Full range is 0°C to 70°C for C suffix and –40°C to 125°C for I suffix. If not specified, full range is –40°C to 125°C.

Copyright © 1999–2011, Texas Instruments Incorporated

## ELECTRICAL CHARACTERISTICS (continued)

at specified free-air temperature, $V_{DD}$ = 12 V (unless otherwise noted)

| PARAMETER | | TEST CONDITIONS | | TA (1) | MIN | TYP | MAX | UNIT |
|---|---|---|---|---|---|---|---|---|
| $I_{DD}$ | Supply current (per channel) | $V_O$ = 7.5 V, | No load | 25°C | | 1.9 | 2.9 | mA |
| | | | | Full range | | | 3.5 | |
| $I_{DD(SHDN)}$ | Supply current in shutdown mode (TLC080, TLC083, TLC085) (per channel) | $\overline{SHDN}$ ≤ 0.8 V | | 25°C | | 125 | 200 | µA |
| | | | | Full range | | | 250 | |

## OPERATING CHARACTERISTICS

at specified free-air temperature, $V_{DD}$ = 12 V (unless otherwise noted)

| PARAMETER | | TEST CONDITIONS | | $T_A$ (1) | MIN | TYP | MAX | UNIT |
|---|---|---|---|---|---|---|---|---|
| SR+ | Positive slew rate at unity gain | $V_{O(PP)}$ = 2 V, | $C_L$ = 50 pF, | 25°C | 10 | 16 | | V/µs |
| | | $R_L$ = 10 kΩ | | Full range | 9.5 | | | |
| SR– | Negative slew rate at unity gain | $V_{O(PP)}$ = 2 V, | $C_L$ = 50 pF, | 25°C | 12.5 | 19 | | V/µs |
| | | $R_L$ = 10 kΩ | | Full range | 10 | | | |
| $V_n$ | Equivalent input noise voltage | f = 100 Hz | | 25°C | | 14 | | nV/√Hz |
| | | f = 1 kHz | | 25°C | | 8.5 | | |
| $I_n$ | Equivalent input noise current | f = 1 kHz | | 25°C | | 0.6 | | fA /√Hz |
| THD + N | Total harmonic distortion plus noise | $V_{O(PP)}$ = 8 V, | $A_V$ = 1 | 25°C | | 0.002 | | % |
| | | $R_L$ = 10 kΩ and 250 Ω, | $A_V$ = 10 | | | 0.005 | | |
| | | f = 1 kHz | $A_V$ = 100 | | | 0.022 | | |
| $t_{(on)}$ | Amplifier turnon time (2) | $R_L$ = 10 kΩ | | 25°C | | 0.47 | | µs |
| $t_{(off)}$ | Amplifier turnoff time (2) | | | 25°C | | 2.5 | | µs |
| | Gain-bandwidth product | f = 10 kHz, | $R_L$ = 10 kΩ | 25°C | | 10 | | MHz |
| $t_s$ | Settling time | $V_{(STEP)PP}$ = 1 V, $A_V$ = −1, $C_L$ = 10 pF, $R_L$ = 10 kΩ | 0.1% | 25°C | | 0.17 | | µs |
| | | | 0.01% | | | 0.22 | | |
| | | $V_{(STEP)PP}$ = 1 V, $A_V$ = –1, $C_L$ = 47 pF, $R_L$ = 10 kΩ | 0.1% | | | 0.17 | | |
| | | | 0.01% | | | 0.29 | | |
| $\varphi_m$ | Phase margin | $R_L$ = 10 kΩ, | $C_L$ = 50 pF | 25°C | | 37 | | ° |
| | | $R_L$ = 10 kΩ, | $C_L$ = 0 pF | | | 42 | | |
| | Gain margin | $R_L$ = 10 kΩ, | $C_L$ = 50 pF | 25°C | | 3.1 | | dB |
| | | $R_L$ = 10 kΩ, | $C_L$ = 0 pF | | | 4 | | |

(1) Full range is 0°C to 70°C for C suffix and –40°C to 125°C for I suffix. If not specified, full range is –40°C to 125°C.
(2) Disable time and enable time are defined as the interval between application of the logic signal to SHDN and the point at which the supply current has reached half its final value.


Copyright © 1999–2011, Texas Instruments Incorporated

## TYPICAL CHARACTERISTICS

### Table of Graphs

| | | | FIGURE |
|---|---|---|---|
| $V_{IO}$ | Input offset voltage | vs Common-mode input voltage | 1, 2 |
| $I_{IO}$ | Input offset current | vs Free-air temperature | 3, 4 |
| $I_{IB}$ | Input bias current | vs Free-air temperature | 3, 4 |
| $V_{OH}$ | High-level output voltage | vs High-level output current | 5, 7 |
| $V_{OL}$ | Low-level output voltage | vs Low-level output current | 6, 8 |
| $Z_o$ | Output impedance | vs Frequency | 9 |
| $I_{DD}$ | Supply current | vs Supply voltage | 10 |
| PSRR | Power supply rejection ratio | vs Frequency | 11 |
| CMRR | Common-mode rejection ratio | vs Frequency | 12 |
| $V_n$ | Equivalent input noise voltage | vs Frequency | 13 |
| $V_{O(PP)}$ | Peak-to-peak output voltage | vs Frequency | 14, 15 |
| | Crosstalk | vs Frequency | 16 |
| | Differential voltage gain | vs Frequency | 17, 18 |
| | Phase | vs Frequency | 17, 18 |
| $\varphi_m$ | Phase margin | vs Load capacitance | 19, 20 |
| | Gain margin | vs Load capacitance | 21, 22 |
| | Gain-bandwidth product | vs Supply voltage | 23 |
| SR | Slew rate | vs Supply voltage<br>vs Free-air temperature | 24<br>25, 26 |
| THD + N | Total harmonic distortion plus noise | vs Frequency | 27, 28 |
| | | vs Peak-to-peak output voltage | 29, 30 |
| | Large-signal follower pulse response | | 31, 32 |
| | Small-signal follower pulse response | | 33 |
| | Large-signal inverting pulse response | | 34, 35 |
| | Small-signal inverting pulse response | | 36 |
| | Shutdown forward isolation | vs Frequency | 37, 38 |
| | Shutdown reverse isolation | vs Frequency | 39, 40 |
| | Shutdown supply current | vs Supply voltage | 41 |
| | | vs Free-air temperature | 42 |
| | Shutdown pulse | | 43, 44 |

Copyright © 1999–2011, Texas Instruments Incorporated

## TYPICAL CHARACTERISTICS

**INPUT OFFSET VOLTAGE vs COMMON-MODE INPUT VOLTAGE**

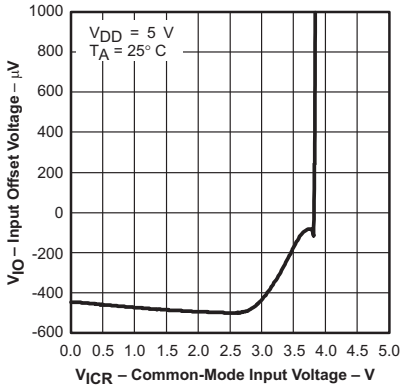


**Figure 1.**

**INPUT OFFSET VOLTAGE vs COMMON-MODE INPUT VOLTAGE**

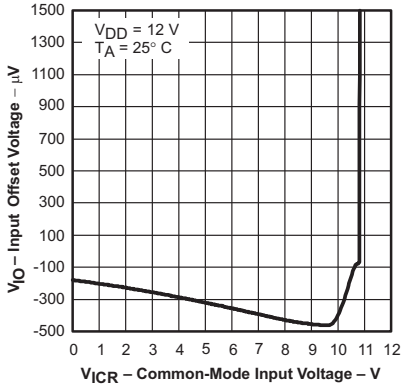


**Figure 2.**

**INPUT BIAS CURRENT AND INPUT OFFSET CURRENT vs FREE-AIR TEMPERATURE**

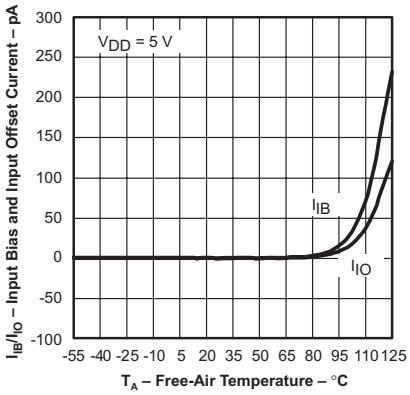


**Figure 3.**

**INPUT BIAS CURRENT AND INPUT OFFSET CURRENT vs FREE-AIR TEMPERATURE**

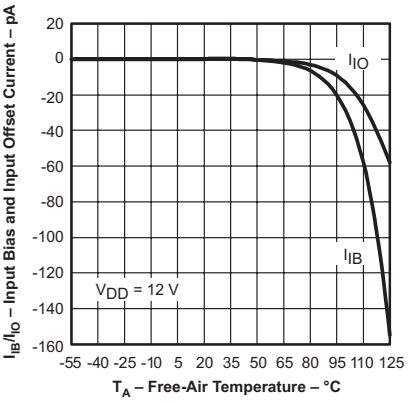


**Figure 4.**

**HIGH-LEVEL OUTPUT VOLTAGE vs HIGH-LEVEL OUTPUT CURRENT**

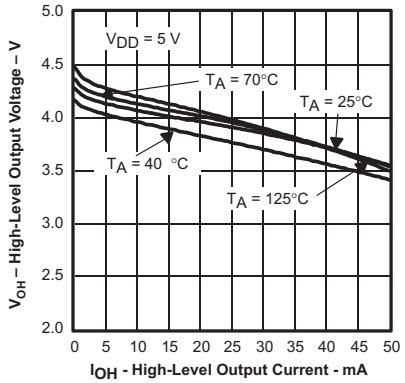


**Figure 5.**

**LOW-LEVEL OUTPUT VOLTAGE vs LOW-LEVEL OUTPUT CURRENT**

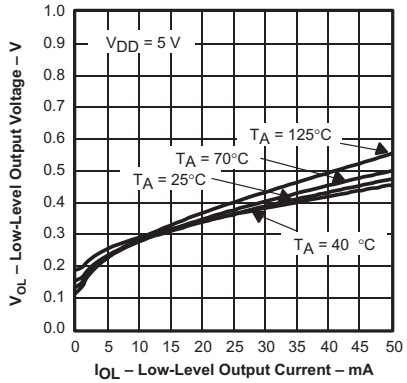


**Figure 6.**

**HIGH-LEVEL OUTPUT VOLTAGE vs HIGH-LEVEL OUTPUT CURRENT**

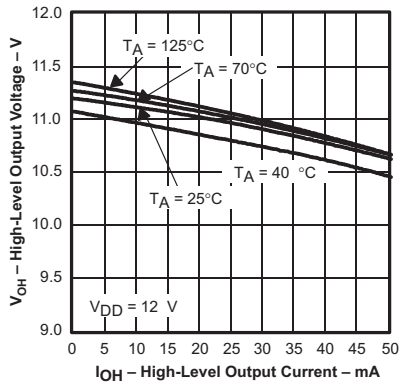


**Figure 7.**

**LOW-LEVEL OUTPUT VOLTAGE vs LOW-LEVEL OUTPUT CURRENT**

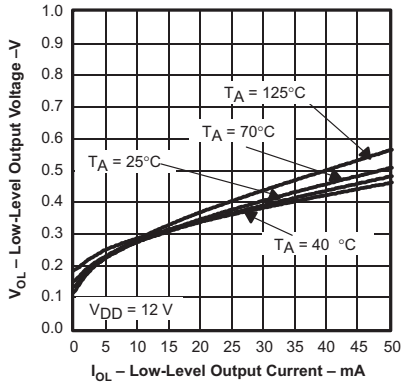


**Figure 8.**

**OUTPUT IMPEDANCE vs FREQUENCY**

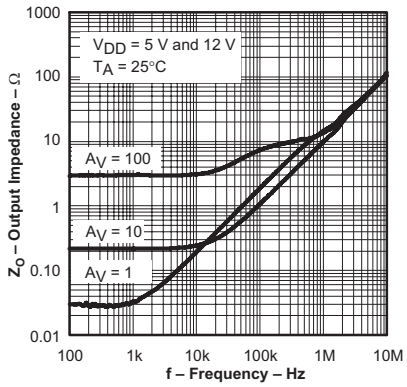


**Figure 9.**


Copyright © 1999–2011, Texas Instruments Incorporated

## TYPICAL CHARACTERISTICS

**SUPPLY CURRENT vs SUPPLY VOLTAGE**

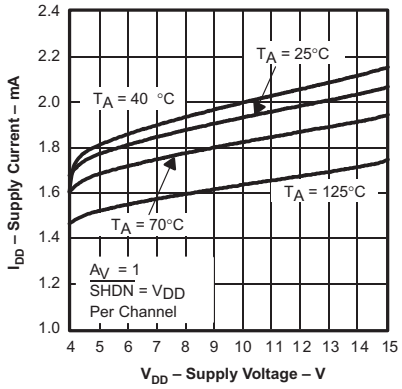


**Figure 10.**

**POWER SUPPLY REJECTION RATIO vs FREQUENCY**

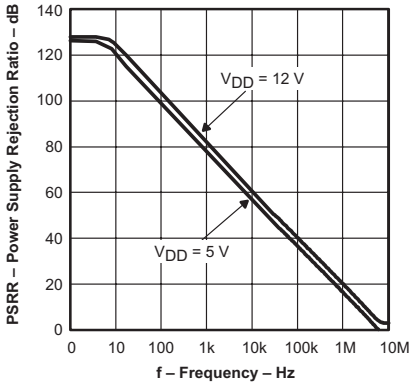


**Figure 11.**

**COMMON-MODE REJECTION RATIO vs FREQUENCY**

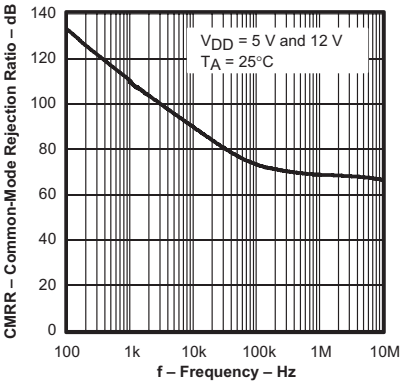


**Figure 12.**

**EQUIVALENT INPUT NOISE VOLTAGE vs FREQUENCY**

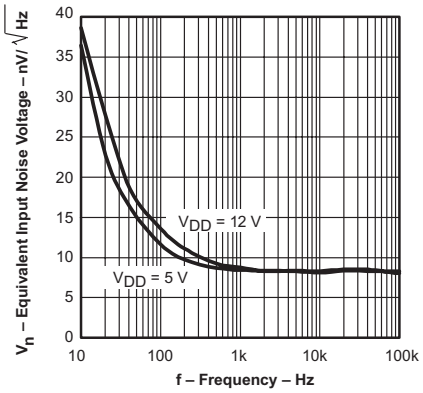


**Figure 13.**

**PEAK-TO-PEAK OUTPUT VOLTAGE vs FREQUENCY**

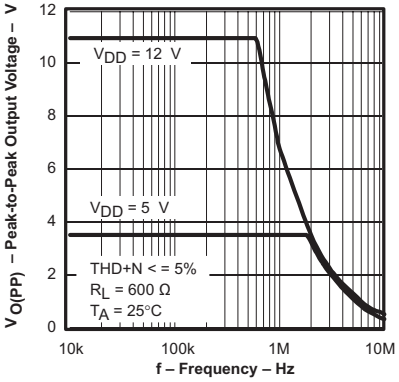


**Figure 14.**

**PEAK-TO-PEAK OUTPUT VOLTAGE vs FREQUENCY**

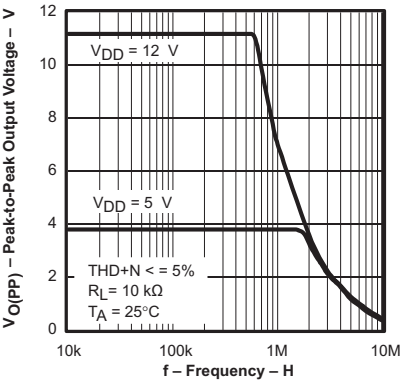


**Figure 15.**

**CROSSTALK vs FREQUENCY**

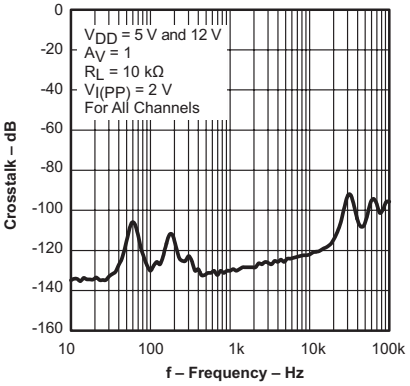


**Figure 16.**

## TYPICAL CHARACTERISTICS

**DIFFERENTIAL VOLTAGE GAIN AND PHASE vs FREQUENCY**

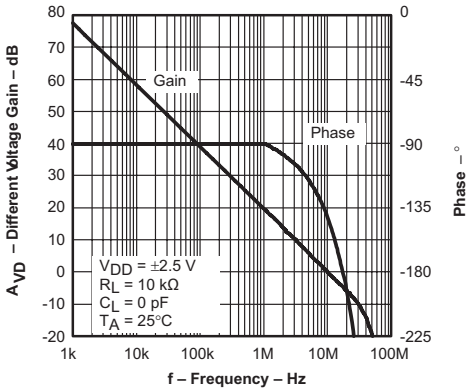


**Figure 17.**

**DIFFERENTIAL VOLTAGE GAIN AND PHASE vs FREQUENCY**

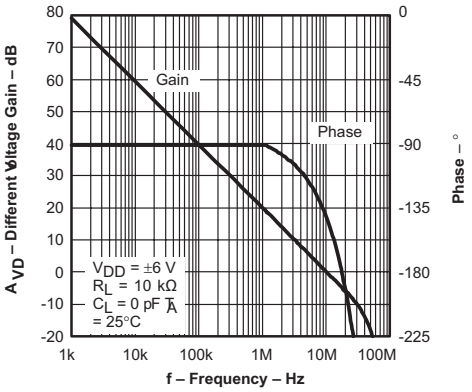


**Figure 18.**

**PHASE MARGIN vs LOAD CAPACITANCE**

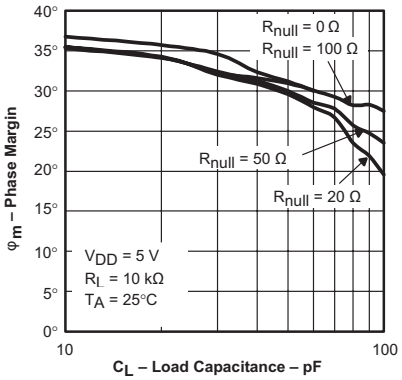


**Figure 19.**

**PHASE MARGIN vs LOAD CAPACITANCE**

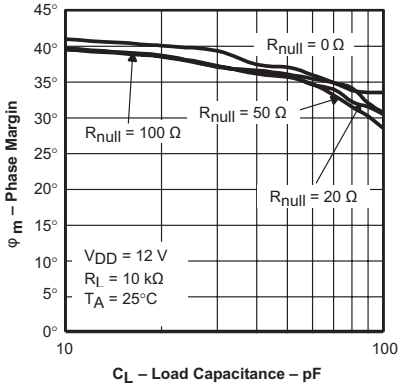


**Figure 20.**

**GAIN MARGIN vs LOAD CAPACITANCE**

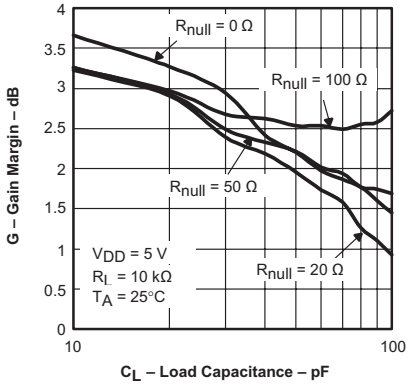


**Figure 21.**

**GAIN MARGIN vs LOAD CAPACITANCE**

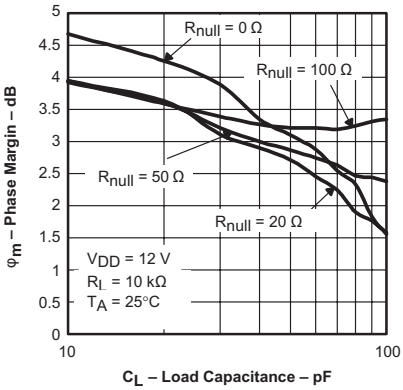


**Figure 22.**

**GAIN BANDWIDTH PRODUCT vs SUPPLY VOLTAGE**

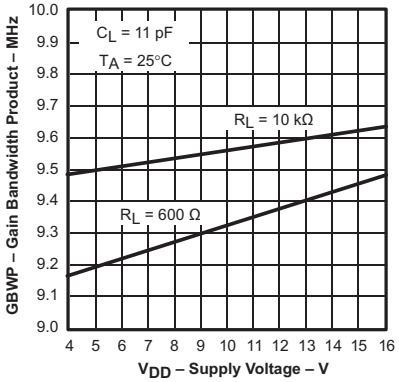


**Figure 23.**

**SLEW RATE vs SUPPLY VOLTAGE**

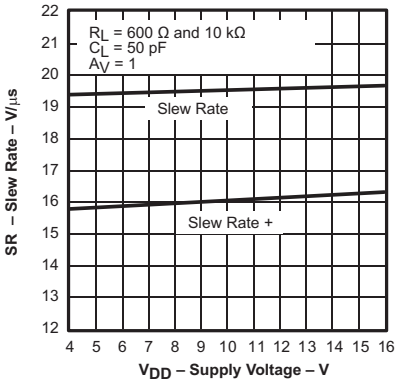


**Figure 24.**


Copyright © 1999–2011, Texas Instruments Incorporated

## TYPICAL CHARACTERISTICS

**SLEW RATE vs FREE-AIR TEMPERATURE**

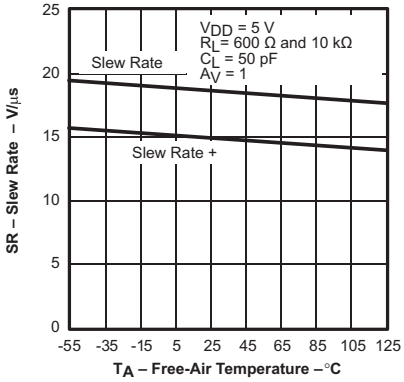


Figure 25.

**SLEW RATE vs FREE-AIR TEMPERATURE**

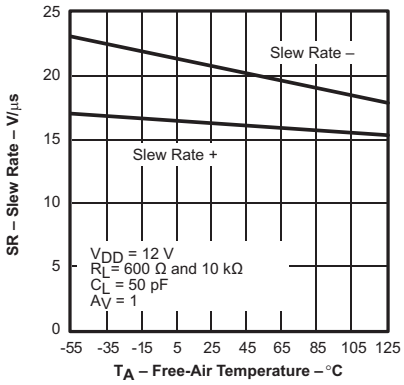


Figure 26.

**TOTAL HARMONIC DISTORTION PLUS NOISE vs FREQUENCY**

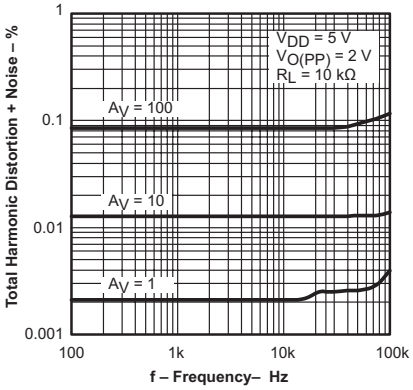


Figure 27.

**TOTAL HARMONIC DISTORTION PLUS NOISE vs FREQUENCY**

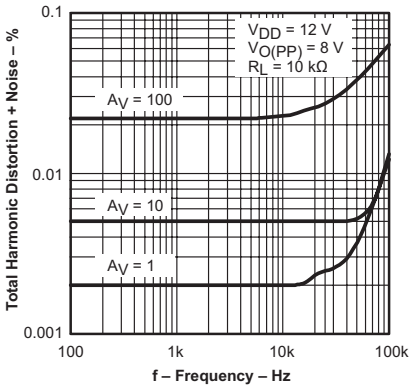


Figure 28.

**TOTAL HARMONIC DISTORTION PLUS NOISE vs PEAK-TO-PEAK OUTPUT VOLTAGE**

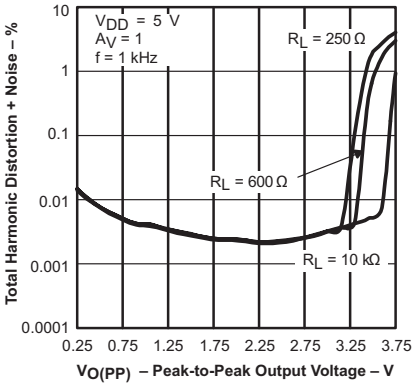


Figure 29.

**TOTAL HARMONIC DISTORTION PLUS NOISE vs PEAK-TO-PEAK OUTPUT VOLTAGE**

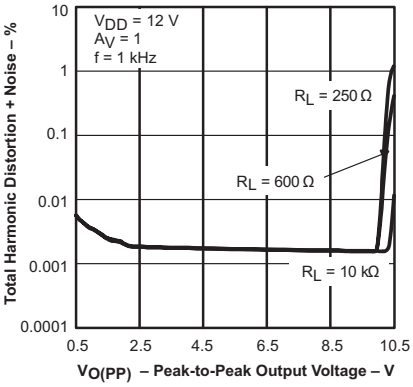


Figure 30.

**LARGE SIGNAL FOLLOWER PULSE RESPONSE**

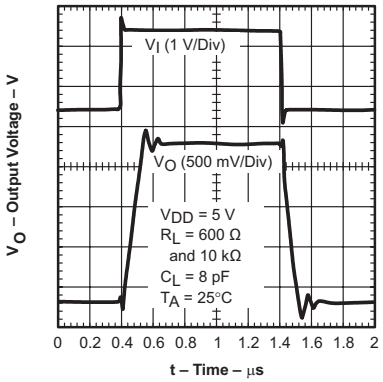


Figure 31.

**LARGE SIGNAL FOLLOWER PULSE RESPONSE**

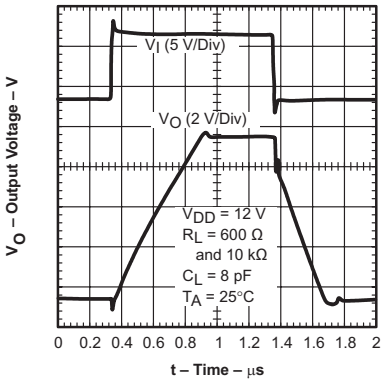


Figure 32.

**SMALL SIGNAL FOLLOWER PULSE RESPONSE**

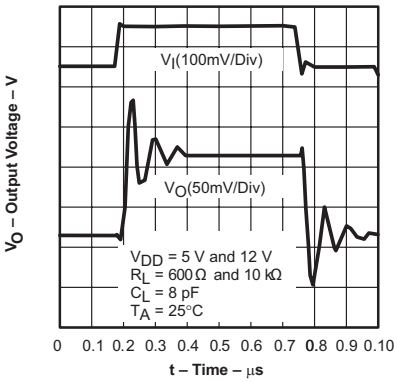


Figure 33.

Copyright © 1999–2011, Texas Instruments Incorporated

## TYPICAL CHARACTERISTICS

**LARGE SIGNAL INVERTING PULSE RESPONSE**

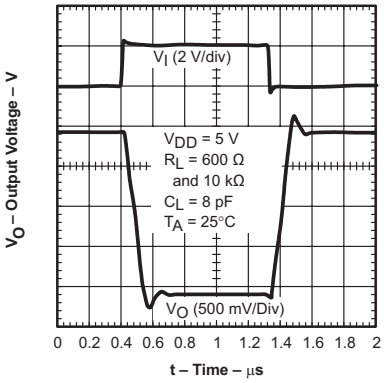


**Figure 34.**

**LARGE SIGNAL INVERTING PULSE RESPONSE**

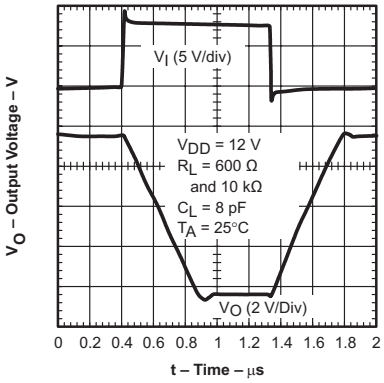


**Figure 35.**

**SMALL SIGNAL INVERTING PULSE RESPONSE**

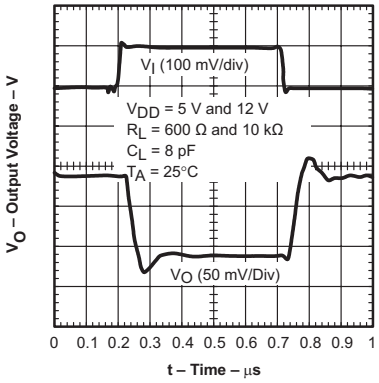


**Figure 36.**

**SHUTDOWN FORWARD ISOLATION vs FREQUENCY**

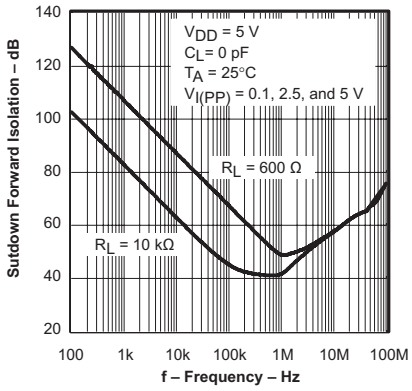


**Figure 37.**

**SHUTDOWN FORWARD ISOLATION vs FREQUENCY**

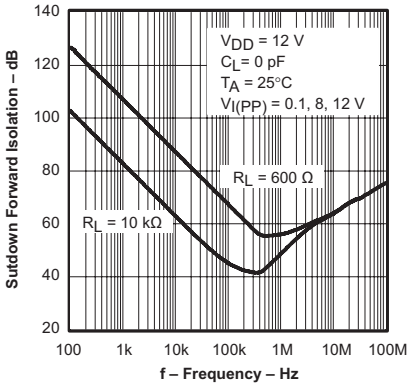


**Figure 38.**

**SHUTDOWN REVERSE ISOLATION vs FREQUENCY**

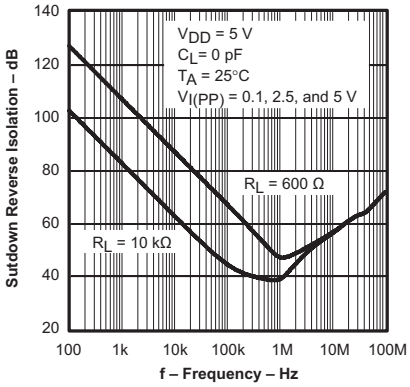


**Figure 39.**

**SHUTDOWN REVERSE ISOLATION vs FREQUENCY**

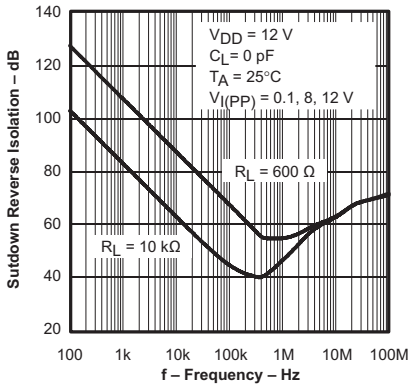


**Figure 40.**

**SHUTDOWN SUPPLY CURRENT vs SUPPLY VOLTAGE**

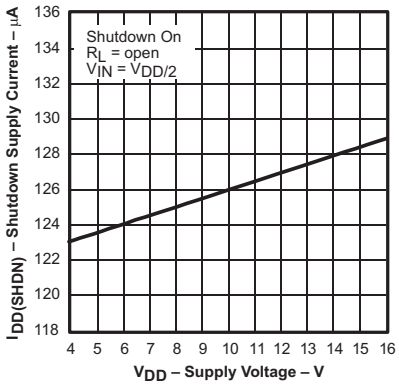


**Figure 41.**

**SHUTDOWN SUPPLY CURRENT vs FREE-AIR TEMPERATURE**

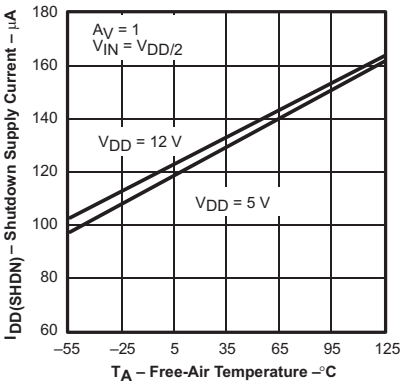


**Figure 42.**


Copyright © 1999–2011, Texas Instruments Incorporated

## TYPICAL CHARACTERISTICS

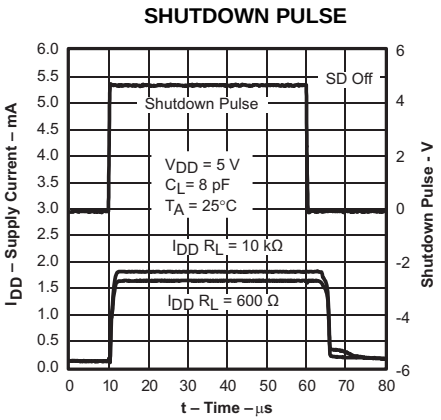


Figure 43.

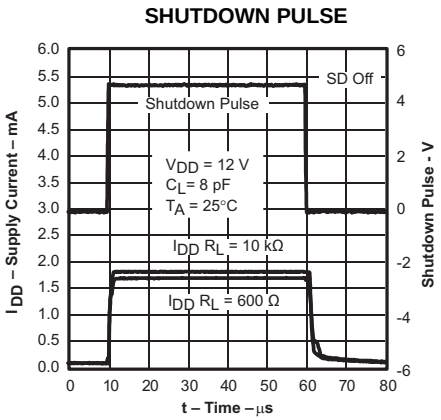


Figure 44.

## PARAMETER MEASUREMENT INFORMATION

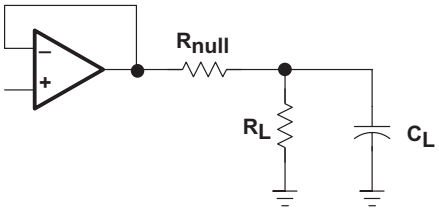


Figure 45

Figure 45.

## APPLICATION INFORMATION

### Input Offset Voltage Null Circuit

The TLC080 and TLC081 has an input offset nulling function. Refer to Figure 46 for the diagram.

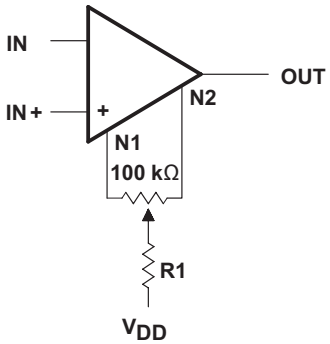


A. R1 = 5.6 kΩ for offset voltage adjustment of ±10 mV. R1 = 20 kΩ for offset voltage adjustment of ±3 mV.

**Figure 46. Input Offset Voltage Null Circuit**

## Driving a Capacitive Load

When the amplifier is configured in this manner, capacitive loading directly on the output will decrease the device's phase margin leading to high frequency ringing or oscillations. Therefore, for capacitive loads of greater than 10 pF, it is recommended that a resistor be placed in series ($R_{NULL}$) with the output of the amplifier, as shown in Figure 47. A minimum value of 20 Ω should work well for most applications.

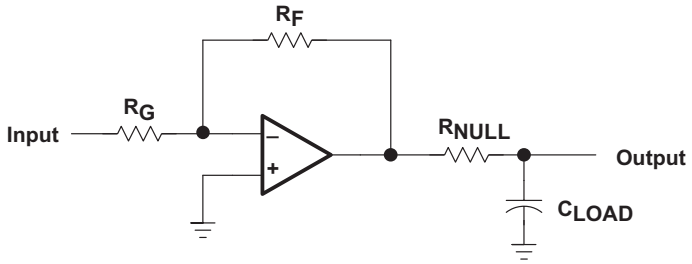


**Figure 47. Driving a Capacitive Load**

## Offset Voltage

The output offset voltage, ($V_{OO}$) is the sum of the input offset voltage ($V_{IO}$) and both input bias currents ($I_{IB}$) times the corresponding gains. The following schematic and formula can be used to calculate the output offset voltage:

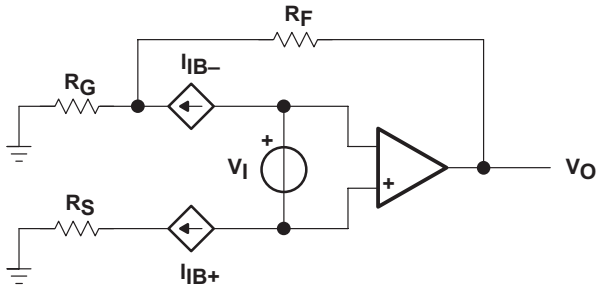


$$V_{OO} = V_{IO}\left(1+\left(\frac{R_F}{R_G}\right)\right) \pm I_{IB} + R_S\left(1+\left(\frac{R_F}{R_G}\right)\right) \pm I_{IB-} R_F$$

**Figure 48. Output Offset Voltage Model**


Copyright © 1999–2011, Texas Instruments Incorporated

## High Speed CMOS Input Amplifiers

The TLC08x is a family of high-speed low-noise CMOS input operational amplifiers that has an input capacitance of the order of 20 pF. Any resistor used in the feedback path adds a pole in the transfer function equivalent to the input capacitance multiplied by the combination of source resistance and feedback resistance. For example, a gain of –10, a source resistance of 1 kΩ, and a feedback resistance of 10 kΩ add an additional pole at approximately 8 MHz. This is more apparent with CMOS amplifiers than bipolar amplifiers due to their greater input capacitance.

This is of little consequence on slower CMOS amplifiers, as this pole normally occurs at frequencies above their unity-gain bandwidth. However, the TLC08x with its 10-MHz bandwidth means that this pole normally occurs at frequencies where there is on the order of 5dB gain left and the phase shift adds considerably.

The effect of this pole is the strongest with large feedback resistances at small closed loop gains. As the feedback resistance is increased, the gain peaking increases at a lower frequency and the 180° phase shift crossover point also moves down in frequency, decreasing the phase margin.

For the TLC08x, the maximum feedback resistor recommended is 5 kΩ; larger resistances can be used but a capacitor in parallel with the feedback resistor is recommended to counter the effects of the input capacitance pole.

The TLC083 with a 1-V step response has an 80% overshoot with a natural frequency of 3.5 MHz when configured as a unity gain buffer and with a 10-kΩ feedback resistor. By adding a 10-pF capacitor in parallel with the feedback resistor, the overshoot is reduced to 40% and eliminates the natural frequency, resulting in a much faster settling time (see Figure 49). The 10-pF capacitor was chosen for convenience only.

Load capacitance had little effect on these measurements due to the excellent output drive capability of the TLC08x.

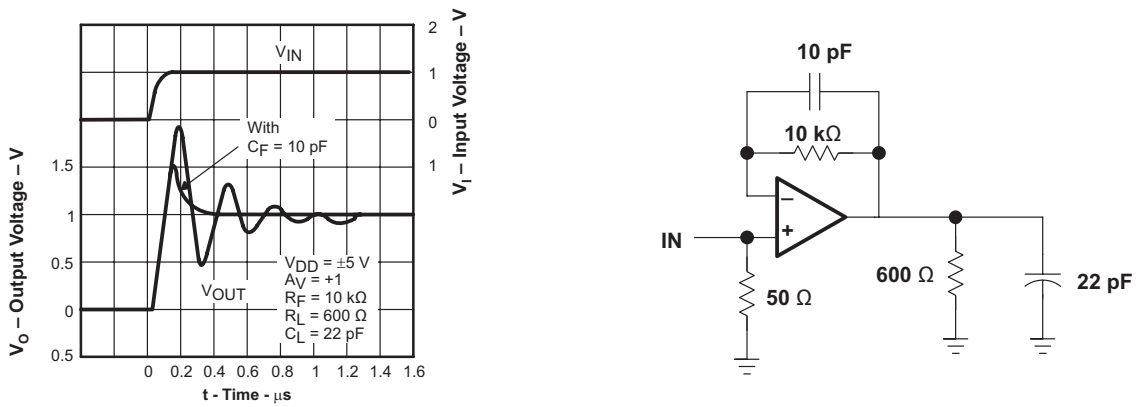


**Figure 49. 1-V Step Response**

## General Configurations

When receiving low-level signals, limiting the bandwidth of the incoming signals into theFigure 50 system is often required. The simplest way to accomplish this is to place an RC filter at the noninverting terminal of the amplifier (see ).

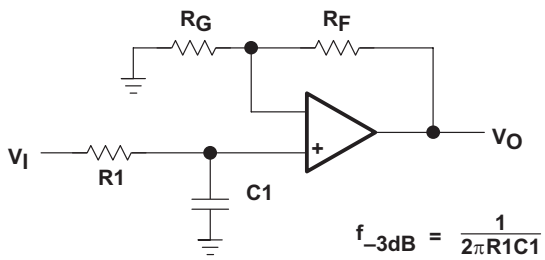


$$f_{-3dB} = \frac{1}{2\pi R1C1}$$

$$\frac{V_O}{V_I} = \left(1 + \frac{R_F}{R_G}\right)\left(\frac{1}{1 + sR1C1}\right)$$

**Figure 50. Single-Pole Low-Pass Filter**

If even more attenuation is needed, a multiple pole filter is required. The Sallen-Key filter can be used for this task. For best results, the amplifier should have a bandwidth that is 8 to 10 times the filter frequency bandwidth. Failure to do this can result in phase shift of the amplifier.

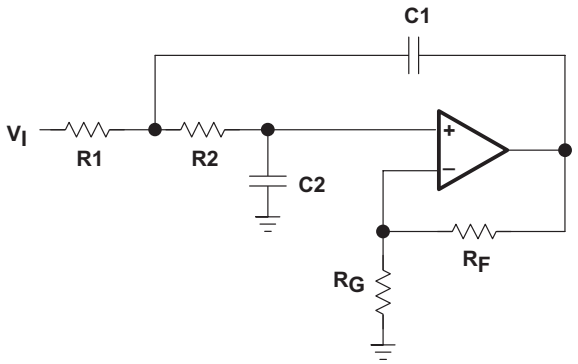


R1 = R2 = R
C1 = C2 = C
Q = Peaking Factor
(Butterworth Q = 0.707)

$$f_{-3dB} = \frac{1}{2\pi RC}$$

$$R_G = \frac{R_F}{\left(2 - \frac{1}{Q}\right)}$$

**Figure 51. 2-Pole Low-Pass Sallen-Key Filter**


Copyright © 1999–2011, Texas Instruments Incorporated

## Shutdown Function

Three members of the TLC08x family (TLC080/3/5) have a shutdown terminal (SHDN) for conserving battery life in portable applications. When the shutdown terminal is tied low, the supply current is reduced to 125 µA/channel, the amplifier is disabled, and the outputs are placed in a high-impedance mode. To enable the amplifier, the shutdown terminal can either be left floating or pulled high. When the shutdown terminal is left floating, care should be taken to ensure that parasitic leakage current at the shutdown terminal does not inadvertently place the operational amplifier into shutdown. The shutdown terminal threshold is always referenced to the voltage on the GND terminal of the device. Therefore, when operating the device with split supply voltages (e.g. ±2.5 V), the shutdown terminal needs to be pulled to $V_{DD-}$ (not system ground) to disable the operational amplifier.

The amplifier's output with a shutdown pulse is shown in Figure 43 and Figure 44. The amplifier is powered with a single 5-V supply and is configured as noninverting with a gain of 5. The amplifier turnon and turnoff times are measured from the 50% point of the shutdown pulse to the 50% point of the output waveform. The times for the single, dual, and quad are listed in the data tables.

Figure 37 through Figure 40 show the amplifiers forward and reverse isolation in shutdown. The operational amplifier is configured as a voltage follower ($A_V$ = 1). The isolation performance is plotted across frequency using 0.1 $V_{PP}$, 2.5 $V_{PP}$, and 5 $V_{PP}$ input signals at ±2.5 V supplies and 0.1 $V_{PP}$, 8 $V_{PP}$, and 12 $V_{PP}$ input signals at ±6 V supplies.

## Circuit Layout Considerations

To achieve the levels of high performance of the TLC08x, follow proper printed-circuit board design techniques. A general set of guidelines is given in the following.

- Ground planes – It is highly recommended that a ground plane be used on the board to provide all components with a low inductive ground connection. However, in the areas of the amplifier inputs and output, the ground plane can be removed to minimize the stray capacitance.
- Proper power supply decoupling – Use a 6.8-µF tantalum capacitor in parallel with a 0.1-µF ceramic capacitor on each supply terminal. It may be possible to share the tantalum among several amplifiers depending on the application, but a 0.1-µF ceramic capacitor should always be used on the supply terminal of every amplifier. In addition, the 0.1-µF capacitor should be placed as close as possible to the supply terminal. As this distance increases, the inductance in the connecting trace makes the capacitor less effective. The designer should strive for distances of less than 0.1 inches between the device power terminals and the ceramic capacitors.
- Sockets – Sockets can be used but are not recommended. The additional lead inductance in the socket pins will often lead to stability problems. Surface-mount packages soldered directly to the printed-circuit board is the best implementation.
- Short trace runs/compact part placements – Optimum high performance is achieved when stray series inductance has been minimized. To realize this, the circuit layout should be made as compact as possible, thereby minimizing the length of all trace runs. Particular attention should be paid to the inverting input of the amplifier. Its length should be kept as short as possible. This will help to minimize stray capacitance at the input of the amplifier.
- Surface-mount passive components – Using surface-mount passive components is recommended for high performance amplifier circuits for several reasons. First, because of the extremely low lead inductance of surface-mount components, the problem with stray series inductance is greatly reduced. Second, the small size of surface-mount components naturally leads to a more compact layout thereby minimizing both stray inductance and capacitance. If leaded components are used, it is recommended that the lead lengths be kept as short as possible.

Copyright © 1999–2011, Texas Instruments Incorporated

## General PowerPAD Design Considerations

The TLC08x is available in a thermally-enhanced PowerPAD family of packages. These packages are constructed using a downset leadframe upon which the die is mounted [see Figure 52(a) and Figure 52(b)]. This arrangement results in the lead frame being exposed as a thermal pad on the underside of the package [see Figure 52(c)]. Because this thermal pad has direct thermal contact with the die, excellent thermal performance can be achieved by providing a good thermal path away from the thermal pad.

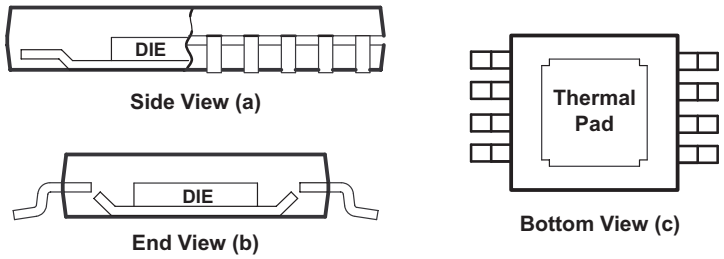


A. The thermal pad is electrically isolated from all terminals in the package.

**Figure 52. Views of Thermally-Enhanced DGN Package**

The PowerPAD package allows for both assembly and thermal management in one manufacturing operation. During the surface-mount solder operation (when the leads are being soldered), the thermal pad must be soldered to a copper area underneath the package. Through the use of thermal paths within this copper area, heat can be conducted away from the package into either a ground plane or other heat dissipating device. **Soldering the PowerPAD to the printed circuit board (PCB) is always required, even with applications that have low power dissipation.** This soldering provides the necessary thermal and mechanical connection between the lead frame die pad and the PCB.

Although there are many ways to properly heatsink the PowerPAD package, the following steps illustrate the recommended approach.


Copyright © 1999–2011, Texas Instruments Incorporated

The PowerPAD must be connected to the most negative supply voltage (GND pin potential) of the device.

1. Prepare the PCB with a top side etch pattern (see the landing patterns at the end of this data sheet). There should be etch for the leads as well as etch for the thermal pad.
2. Place five holes (dual) or nine holes (quad) in the area of the thermal pad. These holes should be 13 mils in diameter. Keep them small so that solder wicking through the holes is not a problem during reflow.
3. Additional vias may be placed anywhere along the thermal plane outside of the thermal pad area. This helps dissipate the heat generated by the TLC08x IC. These additional vias may be larger than the 13-mil diameter vias directly under the thermal pad. They can be larger because they are not in the thermal pad area to be soldered so that wicking is not a problem.
4. Connect all holes to the internal plane that is at the same potential as the ground pin of the device.
5. When connecting these holes to this internal plane, do not use the typical web or spoke via connection methodology. Web connections have a high thermal resistance connection that is useful for slowing the heat transfer during soldering operations. This makes the soldering of vias that have plane connections easier. In this application, however, low thermal resistance is desired for the most efficient heat transfer. Therefore, the holes under the TLC08x PowerPAD package should make their connection to the internal ground plane with a complete connection around the entire circumference of the plated-through hole.
6. The top-side solder mask should leave the terminals of the package and the thermal pad area with its five holes (dual) or nine holes (quad) exposed. The bottom-side solder mask should cover the five or nine holes of the thermal pad area. This prevents solder from being pulled away from the thermal pad area during the reflow process.
7. Apply solder paste to the exposed thermal pad area and all of the IC terminals.
8. With these preparatory steps in place, the TLC08x IC is simply placed in position and run through the solder reflow operation as any standard surface-mount component. This results in a part that is properly installed.

For a given $\theta_{JA}$, the maximum power dissipation is shown in Figure 53 and is calculated by the following formula:

$$P_D = \left(\frac{T_{MAX} - T_A}{\theta_{JA}}\right) \quad (1)$$

Where:

$P_D$ = Maximum power dissipation of TLC08x IC (watts)

$T_{MAX}$ = Absolute maximum junction temperature (150°C)

$T_A$ = Free-ambient air temperature (°C)

$\theta_{JA}$ = $\theta_{JC} + \theta_{CA}$

$\theta_{JC}$ = Thermal coefficient from junction to case

$\theta_{CA}$ = Thermal coefficient from case to ambient air (°C/W)

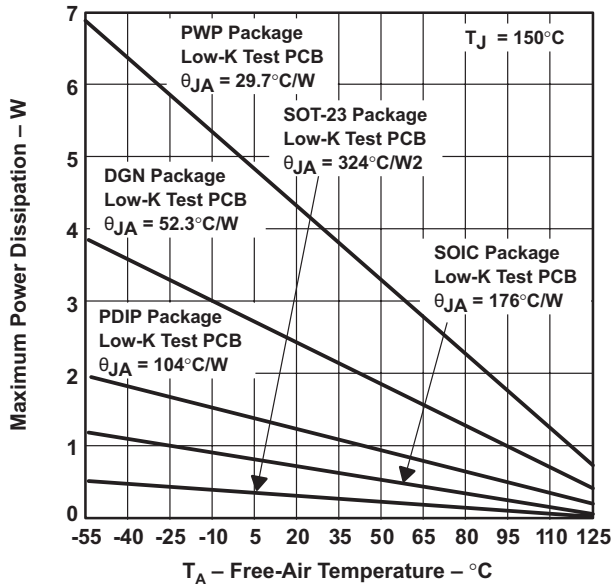


A. Results are with no air flow and using JEDEC Standard Low-K test PCB.

**Figure 53. Maximum Power Dissipation vs Free-Air Temperature**

The next consideration is the package constraints. The two sources of heat within an amplifier are quiescent power and output power. The designer should never forget about the quiescent heat generated within the device, especially multi-amplifier devices. Because these devices have linear output stages (Class A-B), most of the heat dissipation is at low output voltages with high output currents.

The other key factor when dealing with power dissipation is how the devices are mounted on the PCB. The PowerPAD devices are extremely useful for heat dissipation. But, the device should always be soldered to a copper plane to fully use the heat dissipation properties of the PowerPAD. The SOIC package, on the other hand, is highly dependent on how it is mounted on the PCB. As more trace and copper area is placed around the device, $\theta_{JA}$ decreases and the heat dissipation capability increases. The currents and voltages shown in these graphs are for the total package. For the dual or quad amplifier packages, the sum of the RMS output currents and voltages should be used to choose the proper package.


Copyright © 1999–2011, Texas Instruments Incorporated

## Macromodel Information

Macromodel information provided was derived using Microsim Parts™, the model generation software used with Microsim PSpice™. The Boyle macromodel (see [1]) and subcircuit in Figure 54 are generated using the TLC08x typical electrical and operating characteristics at $T_A$ = 25°C. Using this information, output simulations of the following key parameters can be generated to a tolerance of 20% (in most cases):

- Maximum positive output voltage swing
- Maximum negative output voltage swing
- Slew rate
- Quiescent power dissipation
- Input bias current
- Open-loop voltage amplification
- Unity-gain frequency
- Common-mode rejection ratio
- Phase margin
- DC output resistance
- AC output resistance
- Short-circuit output current limit

(1) G. R. Boyle, B. M. Cohn, D. O. Pederson, and J. E. Solomon, “Macromodeling of Integrated Circuit Operational Amplifiers,” IEEE Journal of Solid-State Circuits, SC-9, 353 (1974).

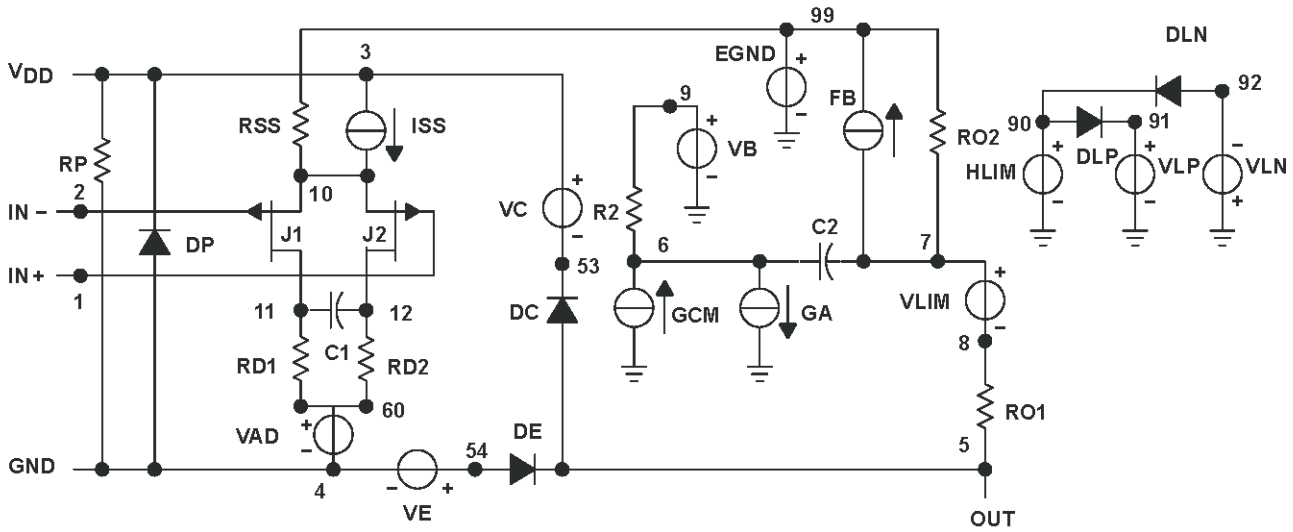


```
*DEVICE=TLC08X_5V, OPAMP, PJF, INT

* TLC08X_5V − 5V operational amplifier "macromodel" sub-
circuit
* created using Parts release 8.0 on 12/16/99 at 14:03
* Parts is a MicroSim product.
*
* connections:          non-inverting input
*                       | inverting input
*                       | | positive power supply
*                       | | | negative power supply
*                       | | | | output
*                       | | | | |
.subckt TLC08X_5V  1 2 3 4 5
*
 c1     11  12 4.6015E−12
 c2     6   7  8.0000E−12
 css    10  99 986.29E−15
 dc     5   53 dy
 de     54  5  dy
 dlp    90  91 dx
 dln    92  90 dx
 dp     4   3  dx
 egnd   99  0  poly(2) (3,0) (4,0) 0 .5 .5
 fb     7   99 poly(5) vb vc ve vlp vln 0 13.984E6 −1E3 1E3
                14E6 −14E6
 ga     6   0  11   12 402.12E−6
 gcm    0   6  10   99 1.5735E−6
 ioff   0   6  dc   1.212E−6
 iss    3   10 dc   130.40E−6
 hlim   90  0  vlim 1K
 j1     11  2  10   jx1
 j2     12  1  10   jx2
 r2     6   9      100.00E3
 rd1    4   11     2.4868E3
 rd2    4   12     2.4868E3
 ro1    8   5  10
 ro2    7   99 10
 rp     3   4      2.8249E3
 rss    10  99     1.5337E6
 vb     9   0  dc   0
 vc     3   53 dc   1.5537
 ve     54  4  dc   .84373
 vlim   7   8  dc   0
 vlp    91  0  dc   117.60
 vln    0   92 dc   117.60
.model  dx  D(Is=800.00E−18)
.model  dy  D(Is=800.00E−18 Rs=1m Cjo=10p)
.model  jx1 PJF(Is=80.000E−15 Beta=1.2401E−3  Vto=−1)
.model  jx2 PJF(Is=80.000E−15 Beta=1.2401E−3  Vto=−1)
.ends
```

**Figure 54. Boyle Macromodel and Subcircuit**


Copyright © 1999–2011, Texas Instruments Incorporated

## REVISION HISTORY

NOTE: Page numbers for previous revisions may differ from page numbers in the current version.

| Changes from Revision E (April 2006) to Revision F | Page |
|---|---|
| • Updated Figure 9 | 10 |

## PACKAGING INFORMATION

| Orderable part number | Status (1) | Material type (2) | Package \| Pins | Package qty \| Carrier | RoHS (3) | Lead finish/ Ball material (4) | MSL rating/ Peak reflow (5) | Op temp (°C) | Part marking (6) |
|---|---|---|---|---|---|---|---|---|---|
| TLC080AIDR | Active | Production | SOIC (D) \| 8 | 2500 \| LARGE T&R | Yes | NIPDAU | Level-1-260C-UNLIM | -40 to 125 | C080AI |
| TLC080AIDR.A | Active | Production | SOIC (D) \| 8 | 2500 \| LARGE T&R | Yes | NIPDAU | Level-1-260C-UNLIM | -40 to 125 | C080AI |
| TLC080AIP | Active | Production | PDIP (P) \| 8 | 50 \| TUBE | Yes | NIPDAU | N/A for Pkg Type | -40 to 125 | TLC080AI |
| TLC080AIP.A | Active | Production | PDIP (P) \| 8 | 50 \| TUBE | Yes | NIPDAU | N/A for Pkg Type | -40 to 125 | TLC080AI |
| TLC080CDGNR | Active | Production | HVSSOP (DGN) \| 8 | 2500 \| LARGE T&R | Yes | NIPDAU | Level-1-260C-UNLIM | 0 to 70 | ACW |
| TLC080CDGNR.A | Active | Production | HVSSOP (DGN) \| 8 | 2500 \| LARGE T&R | Yes | NIPDAU | Level-1-260C-UNLIM | 0 to 70 | ACW |
| TLC080CDGNRG4 | Active | Production | HVSSOP (DGN) \| 8 | 2500 \| LARGE T&R | - | Call TI | Call TI | 0 to 70 | |
| TLC080CDR | Active | Production | SOIC (D) \| 8 | 2500 \| LARGE T&R | Yes | NIPDAU | Level-1-260C-UNLIM | 0 to 70 | C080C |
| TLC080CDR.A | Active | Production | SOIC (D) \| 8 | 2500 \| LARGE T&R | Yes | NIPDAU | Level-1-260C-UNLIM | 0 to 70 | C080C |
| TLC080ID | Active | Production | SOIC (D) \| 8 | 75 \| TUBE | Yes | NIPDAU | Level-1-260C-UNLIM | -40 to 125 | C080I |
| TLC080ID.A | Active | Production | SOIC (D) \| 8 | 75 \| TUBE | Yes | NIPDAU | Level-1-260C-UNLIM | -40 to 125 | C080I |
| TLC080IDGNR | Active | Production | HVSSOP (DGN) \| 8 | 2500 \| LARGE T&R | Yes | NIPDAU | Level-1-260C-UNLIM | -40 to 125 | ACX |
| TLC080IDGNR.A | Active | Production | HVSSOP (DGN) \| 8 | 2500 \| LARGE T&R | Yes | NIPDAU | Level-1-260C-UNLIM | -40 to 125 | ACX |
| TLC080IDR | Active | Production | SOIC (D) \| 8 | 2500 \| LARGE T&R | Yes | NIPDAU | Level-1-260C-UNLIM | -40 to 125 | C080I |
| TLC080IDR.A | Active | Production | SOIC (D) \| 8 | 2500 \| LARGE T&R | Yes | NIPDAU | Level-1-260C-UNLIM | -40 to 125 | C080I |
| TLC081AID | Active | Production | SOIC (D) \| 8 | 75 \| TUBE | Yes | NIPDAU | Level-1-260C-UNLIM | -40 to 125 | C081AI |
| TLC081AID.A | Active | Production | SOIC (D) \| 8 | 75 \| TUBE | Yes | NIPDAU | Level-1-260C-UNLIM | -40 to 125 | C081AI |
| TLC081AIDR | Active | Production | SOIC (D) \| 8 | 2500 \| LARGE T&R | Yes | NIPDAU | Level-1-260C-UNLIM | -40 to 125 | C081AI |
| TLC081AIDR.A | Active | Production | SOIC (D) \| 8 | 2500 \| LARGE T&R | Yes | NIPDAU | Level-1-260C-UNLIM | -40 to 125 | C081AI |
| TLC081AIP | Active | Production | PDIP (P) \| 8 | 50 \| TUBE | Yes | NIPDAU | N/A for Pkg Type | -40 to 125 | TLC081AI |
| TLC081AIP.A | Active | Production | PDIP (P) \| 8 | 50 \| TUBE | Yes | NIPDAU | N/A for Pkg Type | -40 to 125 | TLC081AI |
| TLC081CD | Active | Production | SOIC (D) \| 8 | 75 \| TUBE | Yes | NIPDAU | Level-1-260C-UNLIM | 0 to 70 | C081C |
| TLC081CD.A | Active | Production | SOIC (D) \| 8 | 75 \| TUBE | Yes | NIPDAU | Level-1-260C-UNLIM | 0 to 70 | C081C |
| TLC081CDGN | Obsolete | Production | HVSSOP (DGN) \| 8 | - | - | Call TI | Call TI | 0 to 70 | ACY |
| TLC081CDGNR | Active | Production | HVSSOP (DGN) \| 8 | 2500 \| LARGE T&R | Yes | NIPDAU | Level-1-260C-UNLIM | 0 to 70 | ACY |
| TLC081CDGNR.A | Active | Production | HVSSOP (DGN) \| 8 | 2500 \| LARGE T&R | Yes | NIPDAU | Level-1-260C-UNLIM | 0 to 70 | ACY |
| TLC081CDR | Active | Production | SOIC (D) \| 8 | 2500 \| LARGE T&R | Yes | NIPDAU | Level-1-260C-UNLIM | 0 to 70 | C081C |
| TLC081CDR.A | Active | Production | SOIC (D) \| 8 | 2500 \| LARGE T&R | Yes | NIPDAU | Level-1-260C-UNLIM | 0 to 70 | C081C |
| TLC081CP | Active | Production | PDIP (P) \| 8 | 50 \| TUBE | Yes | NIPDAU | N/A for Pkg Type | 0 to 70 | TLC081C |

| Orderable part number | Status (1) | Material type (2) | Package \| Pins | Package qty \| Carrier | RoHS (3) | Lead finish/ Ball material (4) | MSL rating/ Peak reflow (5) | Op temp (°C) | Part marking (6) |
|---|---|---|---|---|---|---|---|---|---|
| TLC081CP.A | Active | Production | PDIP (P) \| 8 | 50 \| TUBE | Yes | NIPDAU | N/A for Pkg Type | 0 to 70 | TLC081C |
| TLC081ID | Active | Production | SOIC (D) \| 8 | 75 \| TUBE | Yes | NIPDAU | Level-1-260C-UNLIM | -40 to 125 | C081I |
| TLC081ID.A | Active | Production | SOIC (D) \| 8 | 75 \| TUBE | Yes | NIPDAU | Level-1-260C-UNLIM | -40 to 125 | C081I |
| TLC081IDGNR | Active | Production | HVSSOP (DGN) \| 8 | 2500 \| LARGE T&R | Yes | NIPDAU | Level-1-260C-UNLIM | -40 to 125 | ACZ |
| TLC081IDGNR.A | Active | Production | HVSSOP (DGN) \| 8 | 2500 \| LARGE T&R | Yes | NIPDAU | Level-1-260C-UNLIM | -40 to 125 | ACZ |
| TLC081IDR | Active | Production | SOIC (D) \| 8 | 2500 \| LARGE T&R | Yes | NIPDAU | Level-1-260C-UNLIM | -40 to 125 | C081I |
| TLC081IDR.A | Active | Production | SOIC (D) \| 8 | 2500 \| LARGE T&R | Yes | NIPDAU | Level-1-260C-UNLIM | -40 to 125 | C081I |
| TLC081IP | Active | Production | PDIP (P) \| 8 | 50 \| TUBE | Yes | NIPDAU | N/A for Pkg Type | -40 to 125 | TLC081I |
| TLC081IP.A | Active | Production | PDIP (P) \| 8 | 50 \| TUBE | Yes | NIPDAU | N/A for Pkg Type | -40 to 125 | TLC081I |
| TLC082AID | Active | Production | SOIC (D) \| 8 | 75 \| TUBE | Yes | NIPDAU | Level-1-260C-UNLIM | -40 to 125 | C082AI |
| TLC082AID.A | Active | Production | SOIC (D) \| 8 | 75 \| TUBE | Yes | NIPDAU | Level-1-260C-UNLIM | -40 to 125 | C082AI |
| TLC082AID.B | Active | Production | SOIC (D) \| 8 | 75 \| TUBE | Yes | NIPDAU | Level-1-260C-UNLIM | -40 to 125 | C082AI |
| TLC082AIDR | Active | Production | SOIC (D) \| 8 | 2500 \| LARGE T&R | Yes | NIPDAU | Level-1-260C-UNLIM | -40 to 125 | C082AI |
| TLC082AIDR.A | Active | Production | SOIC (D) \| 8 | 2500 \| LARGE T&R | Yes | NIPDAU | Level-1-260C-UNLIM | -40 to 125 | C082AI |
| TLC082AIDR.B | Active | Production | SOIC (D) \| 8 | 2500 \| LARGE T&R | Yes | NIPDAU | Level-1-260C-UNLIM | -40 to 125 | C082AI |
| TLC082AIDRG4 | Active | Production | SOIC (D) \| 8 | 2500 \| LARGE T&R | - | Call TI | Call TI | -40 to 125 | |
| TLC082AIP | Active | Production | PDIP (P) \| 8 | 50 \| TUBE | Yes | NIPDAU | N/A for Pkg Type | -40 to 125 | C082AI |
| TLC082AIP.A | Active | Production | PDIP (P) \| 8 | 50 \| TUBE | Yes | NIPDAU | N/A for Pkg Type | -40 to 125 | C082AI |
| TLC082CD | Active | Production | SOIC (D) \| 8 | 75 \| TUBE | Yes | NIPDAU | Level-1-260C-UNLIM | 0 to 70 | C082C |
| TLC082CD.A | Active | Production | SOIC (D) \| 8 | 75 \| TUBE | Yes | NIPDAU | Level-1-260C-UNLIM | 0 to 70 | C082C |
| TLC082CD.B | Active | Production | SOIC (D) \| 8 | 75 \| TUBE | Yes | NIPDAU | Level-1-260C-UNLIM | 0 to 70 | C082C |
| TLC082CDG4 | Active | Production | SOIC (D) \| 8 | 75 \| TUBE | - | Call TI | Call TI | 0 to 70 | |
| TLC082CDGN | Active | Production | HVSSOP (DGN) \| 8 | 80 \| TUBE | Yes | NIPDAU | Level-1-260C-UNLIM | 0 to 70 | ADZ |
| TLC082CDGN.A | Active | Production | HVSSOP (DGN) \| 8 | 80 \| TUBE | Yes | NIPDAU | Level-1-260C-UNLIM | 0 to 70 | ADZ |
| TLC082CDGN.B | Active | Production | HVSSOP (DGN) \| 8 | 80 \| TUBE | Yes | NIPDAU | Level-1-260C-UNLIM | 0 to 70 | ADZ |
| TLC082CDGNR | Active | Production | HVSSOP (DGN) \| 8 | 2500 \| LARGE T&R | Yes | NIPDAU | Level-1-260C-UNLIM | 0 to 70 | ADZ |
| TLC082CDGNR.A | Active | Production | HVSSOP (DGN) \| 8 | 2500 \| LARGE T&R | Yes | NIPDAU | Level-1-260C-UNLIM | 0 to 70 | ADZ |
| TLC082CDGNR.B | Active | Production | HVSSOP (DGN) \| 8 | 2500 \| LARGE T&R | Yes | NIPDAU | Level-1-260C-UNLIM | 0 to 70 | ADZ |
| TLC082CDR | Active | Production | SOIC (D) \| 8 | 2500 \| LARGE T&R | Yes | NIPDAU | Level-1-260C-UNLIM | 0 to 70 | C082C |
| TLC082CDR.A | Active | Production | SOIC (D) \| 8 | 2500 \| LARGE T&R | Yes | NIPDAU | Level-1-260C-UNLIM | 0 to 70 | C082C |
| TLC082CDR.B | Active | Production | SOIC (D) \| 8 | 2500 \| LARGE T&R | Yes | NIPDAU | Level-1-260C-UNLIM | 0 to 70 | C082C |

| Orderable part number | Status (1) | Material type (2) | Package \| Pins | Package qty \| Carrier | RoHS (3) | Lead finish/ Ball material (4) | MSL rating/ Peak reflow (5) | Op temp (°C) | Part marking (6) |
|---|---|---|---|---|---|---|---|---|---|
| TLC082CP | Active | Production | PDIP (P) \| 8 | 50 \| TUBE | Yes | NIPDAU | N/A for Pkg Type | 0 to 70 | C082C |
| TLC082CP.A | Active | Production | PDIP (P) \| 8 | 50 \| TUBE | Yes | NIPDAU | N/A for Pkg Type | 0 to 70 | C082C |
| TLC082CP.B | Active | Production | PDIP (P) \| 8 | 50 \| TUBE | Yes | NIPDAU | N/A for Pkg Type | 0 to 70 | C082C |
| TLC082ID | Active | Production | SOIC (D) \| 8 | 75 \| TUBE | Yes | NIPDAU | Level-1-260C-UNLIM | -40 to 125 | C082I |
| TLC082ID.A | Active | Production | SOIC (D) \| 8 | 75 \| TUBE | Yes | NIPDAU | Level-1-260C-UNLIM | -40 to 125 | C082I |
| TLC082ID.B | Active | Production | SOIC (D) \| 8 | 75 \| TUBE | Yes | NIPDAU | Level-1-260C-UNLIM | -40 to 125 | C082I |
| TLC082IDGN | Active | Production | HVSSOP (DGN) \| 8 | 80 \| TUBE | Yes | NIPDAU | Level-1-260C-UNLIM | -40 to 125 | AEA |
| TLC082IDGN.A | Active | Production | HVSSOP (DGN) \| 8 | 80 \| TUBE | Yes | NIPDAU | Level-1-260C-UNLIM | -40 to 125 | AEA |
| TLC082IDGN.B | Active | Production | HVSSOP (DGN) \| 8 | 80 \| TUBE | Yes | NIPDAU | Level-1-260C-UNLIM | -40 to 125 | AEA |
| TLC082IDGNR | Active | Production | HVSSOP (DGN) \| 8 | 2500 \| LARGE T&R | Yes | NIPDAU | Level-1-260C-UNLIM | -40 to 125 | AEA |
| TLC082IDGNR.A | Active | Production | HVSSOP (DGN) \| 8 | 2500 \| LARGE T&R | Yes | NIPDAU | Level-1-260C-UNLIM | -40 to 125 | AEA |
| TLC082IDGNR.B | Active | Production | HVSSOP (DGN) \| 8 | 2500 \| LARGE T&R | Yes | NIPDAU | Level-1-260C-UNLIM | -40 to 125 | AEA |
| TLC082IDR | Active | Production | SOIC (D) \| 8 | 2500 \| LARGE T&R | Yes | NIPDAU | Level-1-260C-UNLIM | -40 to 125 | C082I |
| TLC082IDR.A | Active | Production | SOIC (D) \| 8 | 2500 \| LARGE T&R | Yes | NIPDAU | Level-1-260C-UNLIM | -40 to 125 | C082I |
| TLC082IDR.B | Active | Production | SOIC (D) \| 8 | 2500 \| LARGE T&R | Yes | NIPDAU | Level-1-260C-UNLIM | -40 to 125 | C082I |
| TLC082IDRG4 | Active | Production | SOIC (D) \| 8 | 2500 \| LARGE T&R | - | Call TI | Call TI | -40 to 125 | |
| TLC082IP | Active | Production | PDIP (P) \| 8 | 50 \| TUBE | Yes | NIPDAU | N/A for Pkg Type | -40 to 125 | C082I |
| TLC082IP.A | Active | Production | PDIP (P) \| 8 | 50 \| TUBE | Yes | NIPDAU | N/A for Pkg Type | -40 to 125 | C082I |
| TLC083AID | Active | Production | SOIC (D) \| 14 | 50 \| TUBE | Yes | NIPDAU | Level-1-260C-UNLIM | -40 to 125 | C083AI |
| TLC083AID.A | Active | Production | SOIC (D) \| 14 | 50 \| TUBE | Yes | NIPDAU | Level-1-260C-UNLIM | -40 to 125 | C083AI |
| TLC083CDGQR | Active | Production | HVSSOP (DGQ) \| 10 | 2500 \| LARGE T&R | Yes | NIPDAU | Level-1-260C-UNLIM | 0 to 70 | AEB |
| TLC083CDGQR.A | Active | Production | HVSSOP (DGQ) \| 10 | 2500 \| LARGE T&R | Yes | NIPDAU | Level-1-260C-UNLIM | 0 to 70 | AEB |
| TLC083CDGQR.B | Active | Production | HVSSOP (DGQ) \| 10 | 2500 \| LARGE T&R | Yes | NIPDAU | Level-1-260C-UNLIM | 0 to 70 | AEB |
| TLC083CDR | Active | Production | SOIC (D) \| 14 | 2500 \| LARGE T&R | Yes | NIPDAU | Level-1-260C-UNLIM | 0 to 70 | C083C |
| TLC083CDR.A | Active | Production | SOIC (D) \| 14 | 2500 \| LARGE T&R | Yes | NIPDAU | Level-1-260C-UNLIM | 0 to 70 | C083C |
| TLC083CDR.B | Active | Production | SOIC (D) \| 14 | 2500 \| LARGE T&R | Yes | NIPDAU | Level-1-260C-UNLIM | 0 to 70 | C083C |
| TLC083CN | Active | Production | PDIP (N) \| 14 | 25 \| TUBE | Yes | NIPDAU | N/A for Pkg Type | 0 to 70 | C083C |
| TLC083CN.A | Active | Production | PDIP (N) \| 14 | 25 \| TUBE | Yes | NIPDAU | N/A for Pkg Type | 0 to 70 | C083C |
| TLC083IDGQ | Active | Production | HVSSOP (DGQ) \| 10 | 80 \| TUBE | Yes | NIPDAU | Level-1-260C-UNLIM | -40 to 125 | AEC |
| TLC083IDGQ.A | Active | Production | HVSSOP (DGQ) \| 10 | 80 \| TUBE | Yes | NIPDAU | Level-1-260C-UNLIM | -40 to 125 | AEC |
| TLC083IDGQ.B | Active | Production | HVSSOP (DGQ) \| 10 | 80 \| TUBE | Yes | NIPDAU | Level-1-260C-UNLIM | -40 to 125 | AEC |

| Orderable part number | Status (1) | Material type (2) | Package \| Pins | Package qty \| Carrier | RoHS (3) | Lead finish/ Ball material (4) | MSL rating/ Peak reflow (5) | Op temp (°C) | Part marking (6) |
|---|---|---|---|---|---|---|---|---|---|
| TLC083IN | Active | Production | PDIP (N) \| 14 | 25 \| TUBE | Yes | NIPDAU | N/A for Pkg Type | -40 to 125 | C083I |
| TLC083IN.A | Active | Production | PDIP (N) \| 14 | 25 \| TUBE | Yes | NIPDAU | N/A for Pkg Type | -40 to 125 | C083I |
| TLC084AID | Active | Production | SOIC (D) \| 14 | 50 \| TUBE | Yes | NIPDAU | Level-1-260C-UNLIM | -40 to 125 | TLC084AI |
| TLC084AID.B | Active | Production | SOIC (D) \| 14 | 50 \| TUBE | Yes | NIPDAU | Level-1-260C-UNLIM | -40 to 125 | TLC084AI |
| TLC084AIDG4 | Active | Production | SOIC (D) \| 14 | 50 \| TUBE | - | Call TI | Call TI | -40 to 125 | |
| TLC084AIDR | Active | Production | SOIC (D) \| 14 | 2500 \| LARGE T&R | Yes | NIPDAU | Level-1-260C-UNLIM | -40 to 125 | TLC084AI |
| TLC084AIDR.A | Active | Production | SOIC (D) \| 14 | 2500 \| LARGE T&R | Yes | NIPDAU | Level-1-260C-UNLIM | -40 to 125 | TLC084AI |
| TLC084AIDR.B | Active | Production | SOIC (D) \| 14 | 2500 \| LARGE T&R | Yes | NIPDAU | Level-1-260C-UNLIM | -40 to 125 | TLC084AI |
| TLC084AIDRG4 | Active | Production | SOIC (D) \| 14 | 2500 \| LARGE T&R | Yes | NIPDAU | Level-1-260C-UNLIM | -40 to 125 | TLC084AI |
| TLC084AIDRG4.A | Active | Production | SOIC (D) \| 14 | 2500 \| LARGE T&R | Yes | NIPDAU | Level-1-260C-UNLIM | -40 to 125 | TLC084AI |
| TLC084AIDRG4.B | Active | Production | SOIC (D) \| 14 | 2500 \| LARGE T&R | Yes | NIPDAU | Level-1-260C-UNLIM | -40 to 125 | TLC084AI |
| TLC084AIN | Active | Production | PDIP (N) \| 14 | 25 \| TUBE | Yes | NIPDAU | N/A for Pkg Type | -40 to 125 | TLC084AI |
| TLC084AIN.B | Active | Production | PDIP (N) \| 14 | 25 \| TUBE | Yes | NIPDAU | N/A for Pkg Type | -40 to 125 | TLC084AI |
| TLC084AIPWP | Active | Production | HTSSOP (PWP) \| 20 | 70 \| TUBE | Yes | NIPDAU | Level-2-260C-1 YEAR | -40 to 125 | TLC084AI |
| TLC084AIPWP.B | Active | Production | HTSSOP (PWP) \| 20 | 70 \| TUBE | Yes | NIPDAU | Level-2-260C-1 YEAR | -40 to 125 | TLC084AI |
| TLC084AIPWPR | Active | Production | HTSSOP (PWP) \| 20 | 2000 \| LARGE T&R | Yes | NIPDAU | Level-2-260C-1 YEAR | -40 to 125 | TLC084AI |
| TLC084AIPWPR.B | Active | Production | HTSSOP (PWP) \| 20 | 2000 \| LARGE T&R | Yes | NIPDAU | Level-2-260C-1 YEAR | -40 to 125 | TLC084AI |
| TLC084CD | Active | Production | SOIC (D) \| 14 | 50 \| TUBE | Yes | NIPDAU | Level-1-260C-UNLIM | 0 to 70 | TLC084C |
| TLC084CD.B | Active | Production | SOIC (D) \| 14 | 50 \| TUBE | Yes | NIPDAU | Level-1-260C-UNLIM | 0 to 70 | TLC084C |
| TLC084CDR | Active | Production | SOIC (D) \| 14 | 2500 \| LARGE T&R | Yes | NIPDAU | Level-1-260C-UNLIM | 0 to 70 | TLC084C |
| TLC084CDR.A | Active | Production | SOIC (D) \| 14 | 2500 \| LARGE T&R | Yes | NIPDAU | Level-1-260C-UNLIM | 0 to 70 | TLC084C |
| TLC084CDR.B | Active | Production | SOIC (D) \| 14 | 2500 \| LARGE T&R | Yes | NIPDAU | Level-1-260C-UNLIM | 0 to 70 | TLC084C |
| TLC084CN | Active | Production | PDIP (N) \| 14 | 25 \| TUBE | Yes | NIPDAU | N/A for Pkg Type | 0 to 70 | TLC084C |
| TLC084CN.A | Active | Production | PDIP (N) \| 14 | 25 \| TUBE | Yes | NIPDAU | N/A for Pkg Type | 0 to 70 | TLC084C |
| TLC084CPWP | Active | Production | HTSSOP (PWP) \| 20 | 70 \| TUBE | Yes | NIPDAU | Level-2-260C-1 YEAR | 0 to 70 | TLC084C |
| TLC084CPWP.A | Active | Production | HTSSOP (PWP) \| 20 | 70 \| TUBE | Yes | NIPDAU | Level-2-260C-1 YEAR | 0 to 70 | TLC084C |
| TLC084CPWPR | Active | Production | HTSSOP (PWP) \| 20 | 2000 \| LARGE T&R | Yes | NIPDAU | Level-2-260C-1 YEAR | 0 to 70 | TLC084C |
| TLC084CPWPR.B | Active | Production | HTSSOP (PWP) \| 20 | 2000 \| LARGE T&R | Yes | NIPDAU | Level-2-260C-1 YEAR | 0 to 70 | TLC084C |
| TLC084ID | Active | Production | SOIC (D) \| 14 | 50 \| TUBE | Yes | NIPDAU | Level-1-260C-UNLIM | -40 to 125 | TLC084I |
| TLC084ID.B | Active | Production | SOIC (D) \| 14 | 50 \| TUBE | Yes | NIPDAU | Level-1-260C-UNLIM | -40 to 125 | TLC084I |
| TLC084IDR | Active | Production | SOIC (D) \| 14 | 2500 \| LARGE T&R | Yes | NIPDAU | Level-1-260C-UNLIM | -40 to 125 | TLC084I |

| Orderable part number | Status (1) | Material type (2) | Package \| Pins | Package qty \| Carrier | RoHS (3) | Lead finish/ Ball material (4) | MSL rating/ Peak reflow (5) | Op temp (°C) | Part marking (6) |
|---|---|---|---|---|---|---|---|---|---|
| TLC084IDR.B | Active | Production | SOIC (D) \| 14 | 2500 \| LARGE T&R | Yes | NIPDAU | Level-1-260C-UNLIM | -40 to 125 | TLC084I |
| TLC084IDRG4 | Active | Production | SOIC (D) \| 14 | 2500 \| LARGE T&R | - | Call TI | Call TI | -40 to 125 | |
| TLC084IPWP | Active | Production | HTSSOP (PWP) \| 20 | 70 \| TUBE | Yes | NIPDAU | Level-2-260C-1 YEAR | -40 to 125 | TLC084I |
| TLC084IPWP.B | Active | Production | HTSSOP (PWP) \| 20 | 70 \| TUBE | Yes | NIPDAU | Level-2-260C-1 YEAR | -40 to 125 | TLC084I |
| TLC084IPWPR | Active | Production | HTSSOP (PWP) \| 20 | 2000 \| LARGE T&R | Yes | NIPDAU | Level-2-260C-1 YEAR | -40 to 125 | TLC084I |
| TLC084IPWPR.B | Active | Production | HTSSOP (PWP) \| 20 | 2000 \| LARGE T&R | Yes | NIPDAU | Level-2-260C-1 YEAR | -40 to 125 | TLC084I |
| TLC085AID | Obsolete | Production | SOIC (D) \| 16 | - | - | Call TI | Call TI | -40 to 125 | TLC085AI |
| TLC085AIDR | Active | Production | SOIC (D) \| 16 | 2500 \| LARGE T&R | Yes | NIPDAU | Level-1-260C-UNLIM | -40 to 125 | TLC085AI |
| TLC085AIDR.B | Active | Production | SOIC (D) \| 16 | 2500 \| LARGE T&R | Yes | NIPDAU | Level-1-260C-UNLIM | -40 to 125 | TLC085AI |
| TLC085AIN | Active | Production | PDIP (N) \| 16 | 25 \| TUBE | Yes | NIPDAU | N/A for Pkg Type | -40 to 125 | TLC085AI |
| TLC085AIN.B | Active | Production | PDIP (N) \| 16 | 25 \| TUBE | Yes | NIPDAU | N/A for Pkg Type | -40 to 125 | TLC085AI |
| TLC085AIPWP | Active | Production | HTSSOP (PWP) \| 20 | 70 \| TUBE | Yes | NIPDAU | Level-2-260C-1 YEAR | -40 to 125 | TLC085AI |
| TLC085AIPWP.B | Active | Production | HTSSOP (PWP) \| 20 | 70 \| TUBE | Yes | NIPDAU | Level-2-260C-1 YEAR | -40 to 125 | TLC085AI |
| TLC085CN | Active | Production | PDIP (N) \| 16 | 25 \| TUBE | Yes | NIPDAU | N/A for Pkg Type | 0 to 70 | TLC085C |
| TLC085CN.A | Active | Production | PDIP (N) \| 16 | 25 \| TUBE | Yes | NIPDAU | N/A for Pkg Type | 0 to 70 | TLC085C |
| TLC085CPWP | Active | Production | HTSSOP (PWP) \| 20 | 70 \| TUBE | Yes | NIPDAU | Level-2-260C-1 YEAR | 0 to 70 | TLC085C |
| TLC085CPWP.A | Active | Production | HTSSOP (PWP) \| 20 | 70 \| TUBE | Yes | NIPDAU | Level-2-260C-1 YEAR | 0 to 70 | TLC085C |

(1) **Status:** For more details on status, see our product life cycle.

(2) **Material type:** When designated, preproduction parts are prototypes/experimental devices, and are not yet approved or released for full production. Testing and final process, including without limitation quality assurance, reliability performance testing, and/or process qualification, may not yet be complete, and this item is subject to further changes or possible discontinuation. If available for ordering, purchases will be subject to an additional waiver at checkout, and are intended for early internal evaluation purposes only. These items are sold without warranties of any kind.

(3) **RoHS values:** Yes, No, RoHS Exempt. See the TI RoHS Statement for additional information and value definition.

(4) **Lead finish/Ball material:** Parts may have multiple material finish options. Finish options are separated by a vertical ruled line. Lead finish/Ball material values may wrap to two lines if the finish value exceeds the maximum column width.

(5) **MSL rating/Peak reflow:** The moisture sensitivity level ratings and peak solder (reflow) temperatures. In the event that a part has multiple moisture sensitivity ratings, only the lowest level per JEDEC standards is shown. Refer to the shipping label for the actual reflow temperature that will be used to mount the part to the printed circuit board.

(6) **Part marking:** There may be an additional marking, which relates to the logo, the lot trace code information, or the environmental category of the part.

Multiple part markings will be inside parentheses. Only one part marking contained in parentheses and separated by a "~" will appear on a part. If a line is indented then it is a continuation of the previous line and the two combined represent the entire part marking for that device.

**Important Information and Disclaimer:**The information provided on this page represents TI's knowledge and belief as of the date that it is provided. TI bases its knowledge and belief on information provided by third parties, and makes no representation or warranty as to the accuracy of such information. Efforts are underway to better integrate information from third parties. TI has taken and continues to take reasonable steps to provide representative and accurate information but may not have conducted destructive testing or chemical analysis on incoming materials and chemicals. TI and TI suppliers consider certain information to be proprietary, and thus CAS numbers and other limited information may not be available for release.

In no event shall TI's liability arising out of such information exceed the total purchase price of the TI part(s) at issue in this document sold by TI to Customer on an annual basis.

**OTHER QUALIFIED VERSIONS OF TLC082, TLC084 :**

- Automotive : TLC082-Q1, TLC084-Q1

NOTE: Qualified Version Definitions:

- Automotive - Q100 devices qualified for high-reliability automotive applications targeting zero defects

## TAPE AND REEL INFORMATION

**REEL DIMENSIONS**

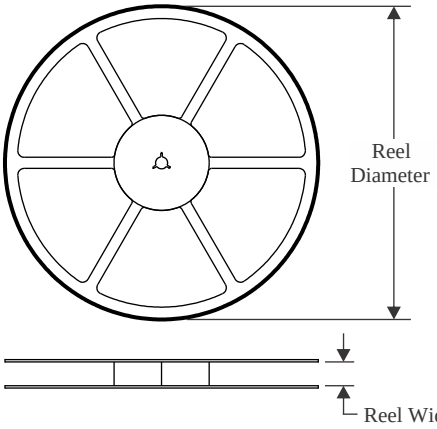


**TAPE DIMENSIONS**

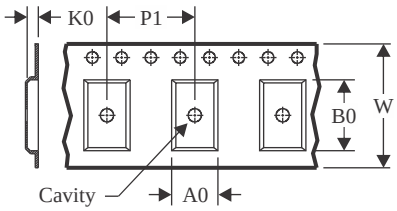


| | |
|---|---|
| A0 | Dimension designed to accommodate the component width |
| B0 | Dimension designed to accommodate the component length |
| K0 | Dimension designed to accommodate the component thickness |
| W | Overall width of the carrier tape |
| P1 | Pitch between successive cavity centers |

**QUADRANT ASSIGNMENTS FOR PIN 1 ORIENTATION IN TAPE**

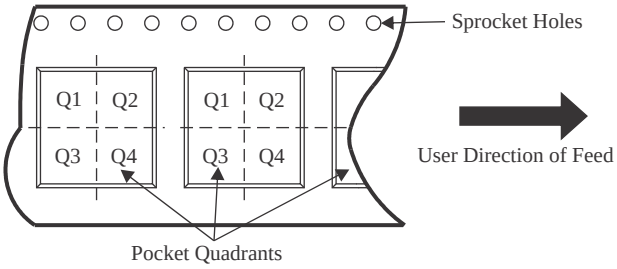


*All dimensions are nominal

| Device | Package Type | Package Drawing | Pins | SPQ | Reel Diameter (mm) | Reel Width W1 (mm) | A0 (mm) | B0 (mm) | K0 (mm) | P1 (mm) | W (mm) | Pin1 Quadrant |
|---|---|---|---|---|---|---|---|---|---|---|---|---|
| TLC080AIDR | SOIC | D | 8 | 2500 | 330.0 | 12.4 | 6.4 | 5.2 | 2.1 | 8.0 | 12.0 | Q1 |
| TLC080CDGNR | HVSSOP | DGN | 8 | 2500 | 330.0 | 12.4 | 5.3 | 3.4 | 1.4 | 8.0 | 12.0 | Q1 |
| TLC080CDR | SOIC | D | 8 | 2500 | 330.0 | 12.4 | 6.4 | 5.2 | 2.1 | 8.0 | 12.0 | Q1 |
| TLC080IDGNR | HVSSOP | DGN | 8 | 2500 | 330.0 | 12.4 | 5.3 | 3.4 | 1.4 | 8.0 | 12.0 | Q1 |
| TLC080IDR | SOIC | D | 8 | 2500 | 330.0 | 12.4 | 6.4 | 5.2 | 2.1 | 8.0 | 12.0 | Q1 |
| TLC081AIDR | SOIC | D | 8 | 2500 | 330.0 | 12.4 | 6.4 | 5.2 | 2.1 | 8.0 | 12.0 | Q1 |
| TLC081CDGNR | HVSSOP | DGN | 8 | 2500 | 330.0 | 12.4 | 5.3 | 3.4 | 1.4 | 8.0 | 12.0 | Q1 |
| TLC081CDR | SOIC | D | 8 | 2500 | 330.0 | 12.4 | 6.4 | 5.2 | 2.1 | 8.0 | 12.0 | Q1 |
| TLC081IDGNR | HVSSOP | DGN | 8 | 2500 | 330.0 | 12.4 | 5.3 | 3.4 | 1.4 | 8.0 | 12.0 | Q1 |
| TLC081IDR | SOIC | D | 8 | 2500 | 330.0 | 12.4 | 6.4 | 5.2 | 2.1 | 8.0 | 12.0 | Q1 |
| TLC082AIDR | SOIC | D | 8 | 2500 | 330.0 | 12.4 | 6.4 | 5.2 | 2.1 | 8.0 | 12.0 | Q1 |
| TLC082CDGNR | HVSSOP | DGN | 8 | 2500 | 330.0 | 12.4 | 5.3 | 3.4 | 1.4 | 8.0 | 12.0 | Q1 |
| TLC082CDR | SOIC | D | 8 | 2500 | 330.0 | 12.4 | 6.4 | 5.2 | 2.1 | 8.0 | 12.0 | Q1 |
| TLC082IDGNR | HVSSOP | DGN | 8 | 2500 | 330.0 | 12.4 | 5.3 | 3.4 | 1.4 | 8.0 | 12.0 | Q1 |
| TLC082IDR | SOIC | D | 8 | 2500 | 330.0 | 12.4 | 6.4 | 5.2 | 2.1 | 8.0 | 12.0 | Q1 |
| TLC083CDGQR | HVSSOP | DGQ | 10 | 2500 | 330.0 | 12.4 | 5.3 | 3.4 | 1.4 | 8.0 | 12.0 | Q1 |

| Device | Package Type | Package Drawing | Pins | SPQ | Reel Diameter (mm) | Reel Width W1 (mm) | A0 (mm) | B0 (mm) | K0 (mm) | P1 (mm) | W (mm) | Pin1 Quadrant |
|---|---|---|---|---|---|---|---|---|---|---|---|---|
| TLC083CDR | SOIC | D | 14 | 2500 | 330.0 | 16.4 | 6.5 | 9.0 | 2.1 | 8.0 | 16.0 | Q1 |
| TLC084AIDR | SOIC | D | 14 | 2500 | 330.0 | 16.4 | 6.5 | 9.0 | 2.1 | 8.0 | 16.0 | Q1 |
| TLC084AIDRG4 | SOIC | D | 14 | 2500 | 330.0 | 16.4 | 6.5 | 9.0 | 2.1 | 8.0 | 16.0 | Q1 |
| TLC084AIPWPR | HTSSOP | PWP | 20 | 2000 | 330.0 | 16.4 | 6.95 | 7.1 | 1.6 | 8.0 | 16.0 | Q1 |
| TLC084CDR | SOIC | D | 14 | 2500 | 330.0 | 16.4 | 6.5 | 9.0 | 2.1 | 8.0 | 16.0 | Q1 |
| TLC084CPWPR | HTSSOP | PWP | 20 | 2000 | 330.0 | 16.4 | 6.95 | 7.1 | 1.6 | 8.0 | 16.0 | Q1 |
| TLC084IDR | SOIC | D | 14 | 2500 | 330.0 | 16.4 | 6.5 | 9.0 | 2.1 | 8.0 | 16.0 | Q1 |
| TLC084IPWPR | HTSSOP | PWP | 20 | 2000 | 330.0 | 16.4 | 6.95 | 7.1 | 1.6 | 8.0 | 16.0 | Q1 |
| TLC085AIDR | SOIC | D | 16 | 2500 | 330.0 | 16.4 | 6.5 | 10.3 | 2.1 | 8.0 | 16.0 | Q1 |

TAPE AND REEL BOX DIMENSIONS

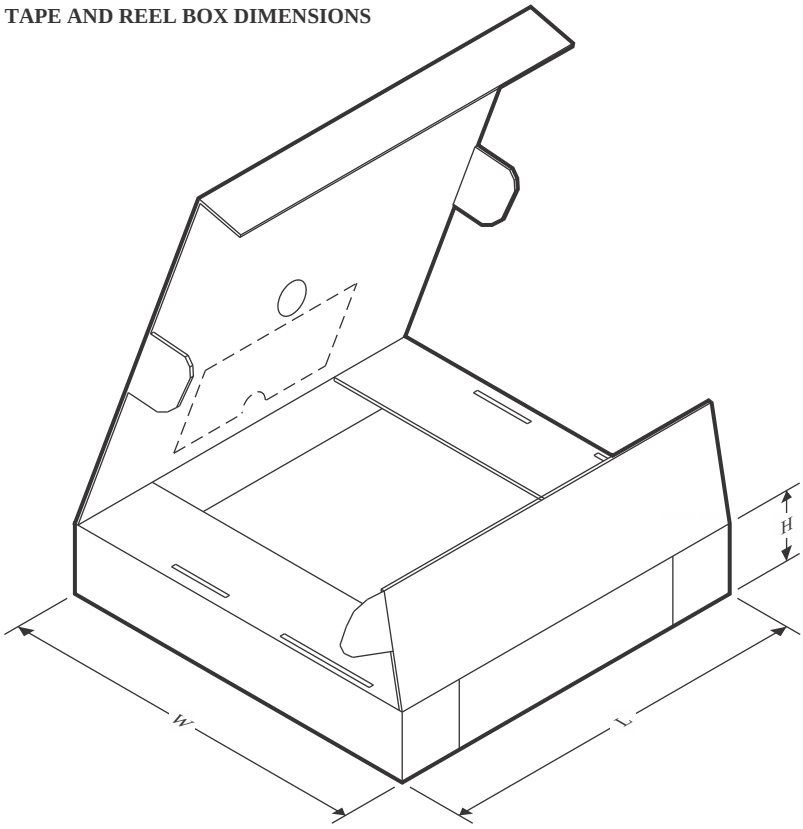


*All dimensions are nominal

| Device | Package Type | Package Drawing | Pins | SPQ | Length (mm) | Width (mm) | Height (mm) |
|---|---|---|---|---|---|---|---|
| TLC080AIDR | SOIC | D | 8 | 2500 | 340.5 | 338.1 | 20.6 |
| TLC080CDGNR | HVSSOP | DGN | 8 | 2500 | 358.0 | 335.0 | 35.0 |
| TLC080CDR | SOIC | D | 8 | 2500 | 340.5 | 338.1 | 20.6 |
| TLC080IDGNR | HVSSOP | DGN | 8 | 2500 | 358.0 | 335.0 | 35.0 |
| TLC080IDR | SOIC | D | 8 | 2500 | 353.0 | 353.0 | 32.0 |
| TLC081AIDR | SOIC | D | 8 | 2500 | 353.0 | 353.0 | 32.0 |
| TLC081CDGNR | HVSSOP | DGN | 8 | 2500 | 358.0 | 335.0 | 35.0 |
| TLC081CDR | SOIC | D | 8 | 2500 | 353.0 | 353.0 | 32.0 |
| TLC081IDGNR | HVSSOP | DGN | 8 | 2500 | 358.0 | 335.0 | 35.0 |
| TLC081IDR | SOIC | D | 8 | 2500 | 353.0 | 353.0 | 32.0 |
| TLC082AIDR | SOIC | D | 8 | 2500 | 353.0 | 353.0 | 32.0 |
| TLC082CDGNR | HVSSOP | DGN | 8 | 2500 | 358.0 | 335.0 | 35.0 |
| TLC082CDR | SOIC | D | 8 | 2500 | 353.0 | 353.0 | 32.0 |
| TLC082IDGNR | HVSSOP | DGN | 8 | 2500 | 358.0 | 335.0 | 35.0 |
| TLC082IDR | SOIC | D | 8 | 2500 | 353.0 | 353.0 | 32.0 |
| TLC083CDGQR | HVSSOP | DGQ | 10 | 2500 | 358.0 | 335.0 | 35.0 |
| TLC083CDR | SOIC | D | 14 | 2500 | 350.0 | 350.0 | 43.0 |
| TLC084AIDR | SOIC | D | 14 | 2500 | 353.0 | 353.0 | 32.0 |

| Device | Package Type | Package Drawing | Pins | SPQ | Length (mm) | Width (mm) | Height (mm) |
|---|---|---|---|---|---|---|---|
| TLC084AIDRG4 | SOIC | D | 14 | 2500 | 353.0 | 353.0 | 32.0 |
| TLC084AIPWPR | HTSSOP | PWP | 20 | 2000 | 350.0 | 350.0 | 43.0 |
| TLC084CDR | SOIC | D | 14 | 2500 | 353.0 | 353.0 | 32.0 |
| TLC084CPWPR | HTSSOP | PWP | 20 | 2000 | 350.0 | 350.0 | 43.0 |
| TLC084IDR | SOIC | D | 14 | 2500 | 353.0 | 353.0 | 32.0 |
| TLC084IPWPR | HTSSOP | PWP | 20 | 2000 | 350.0 | 350.0 | 43.0 |
| TLC085AIDR | SOIC | D | 16 | 2500 | 350.0 | 350.0 | 43.0 |

## TUBE

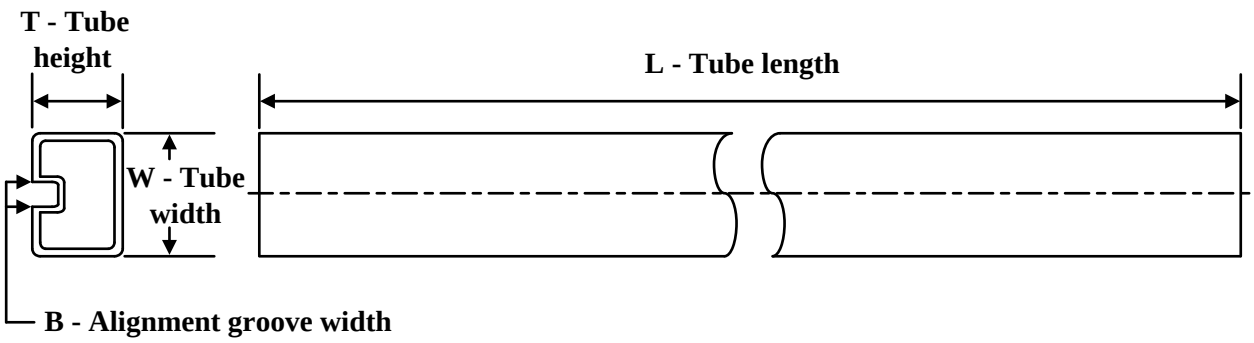


*All dimensions are nominal

| Device | Package Name | Package Type | Pins | SPQ | L (mm) | W (mm) | T (µm) | B (mm) |
|---|---|---|---|---|---|---|---|---|
| TLC080AIP | P | PDIP | 8 | 50 | 506 | 13.97 | 11230 | 4.32 |
| TLC080AIP.A | P | PDIP | 8 | 50 | 506 | 13.97 | 11230 | 4.32 |
| TLC080ID | D | SOIC | 8 | 75 | 505.46 | 6.76 | 3810 | 4 |
| TLC080ID | D | SOIC | 8 | 75 | 507 | 8 | 3940 | 4.32 |
| TLC080ID.A | D | SOIC | 8 | 75 | 507 | 8 | 3940 | 4.32 |
| TLC080ID.A | D | SOIC | 8 | 75 | 505.46 | 6.76 | 3810 | 4 |
| TLC081AID | D | SOIC | 8 | 75 | 507 | 8 | 3940 | 4.32 |
| TLC081AID | D | SOIC | 8 | 75 | 505.46 | 6.76 | 3810 | 4 |
| TLC081AID.A | D | SOIC | 8 | 75 | 507 | 8 | 3940 | 4.32 |
| TLC081AID.A | D | SOIC | 8 | 75 | 505.46 | 6.76 | 3810 | 4 |
| TLC081AIP | P | PDIP | 8 | 50 | 506 | 13.97 | 11230 | 4.32 |
| TLC081AIP.A | P | PDIP | 8 | 50 | 506 | 13.97 | 11230 | 4.32 |
| TLC081CD | D | SOIC | 8 | 75 | 507 | 8 | 3940 | 4.32 |
| TLC081CD.A | D | SOIC | 8 | 75 | 507 | 8 | 3940 | 4.32 |
| TLC081CP | P | PDIP | 8 | 50 | 506 | 13.97 | 11230 | 4.32 |
| TLC081CP.A | P | PDIP | 8 | 50 | 506 | 13.97 | 11230 | 4.32 |
| TLC081ID | D | SOIC | 8 | 75 | 507 | 8 | 3940 | 4.32 |
| TLC081ID.A | D | SOIC | 8 | 75 | 507 | 8 | 3940 | 4.32 |
| TLC081IP | P | PDIP | 8 | 50 | 506 | 13.97 | 11230 | 4.32 |
| TLC081IP.A | P | PDIP | 8 | 50 | 506 | 13.97 | 11230 | 4.32 |
| TLC082AID | D | SOIC | 8 | 75 | 507 | 8 | 3940 | 4.32 |
| TLC082AID | D | SOIC | 8 | 75 | 505.46 | 6.76 | 3810 | 4 |
| TLC082AID.A | D | SOIC | 8 | 75 | 505.46 | 6.76 | 3810 | 4 |
| TLC082AID.A | D | SOIC | 8 | 75 | 507 | 8 | 3940 | 4.32 |
| TLC082AID.B | D | SOIC | 8 | 75 | 505.46 | 6.76 | 3810 | 4 |
| TLC082AID.B | D | SOIC | 8 | 75 | 507 | 8 | 3940 | 4.32 |
| TLC082AIP | P | PDIP | 8 | 50 | 506 | 13.97 | 11230 | 4.32 |
| TLC082AIP.A | P | PDIP | 8 | 50 | 506 | 13.97 | 11230 | 4.32 |
| TLC082CD | D | SOIC | 8 | 75 | 505.46 | 6.76 | 3810 | 4 |

| Device | Package Name | Package Type | Pins | SPQ | L (mm) | W (mm) | T (µm) | B (mm) |
|---|---|---|---|---|---|---|---|---|
| TLC082CD | D | SOIC | 8 | 75 | 507 | 8 | 3940 | 4.32 |
| TLC082CD.A | D | SOIC | 8 | 75 | 507 | 8 | 3940 | 4.32 |
| TLC082CD.A | D | SOIC | 8 | 75 | 505.46 | 6.76 | 3810 | 4 |
| TLC082CD.B | D | SOIC | 8 | 75 | 507 | 8 | 3940 | 4.32 |
| TLC082CD.B | D | SOIC | 8 | 75 | 505.46 | 6.76 | 3810 | 4 |
| TLC082CDGN | DGN | HVSSOP | 8 | 80 | 274 | 6.2 | 2540 | 2.5 |
| TLC082CDGN.A | DGN | HVSSOP | 8 | 80 | 274 | 6.2 | 2540 | 2.5 |
| TLC082CDGN.B | DGN | HVSSOP | 8 | 80 | 274 | 6.2 | 2540 | 2.5 |
| TLC082CP | P | PDIP | 8 | 50 | 506 | 13.97 | 11230 | 4.32 |
| TLC082CP.A | P | PDIP | 8 | 50 | 506 | 13.97 | 11230 | 4.32 |
| TLC082CP.B | P | PDIP | 8 | 50 | 506 | 13.97 | 11230 | 4.32 |
| TLC082ID | D | SOIC | 8 | 75 | 507 | 8 | 3940 | 4.32 |
| TLC082ID | D | SOIC | 8 | 75 | 505.46 | 6.76 | 3810 | 4 |
| TLC082ID.A | D | SOIC | 8 | 75 | 507 | 8 | 3940 | 4.32 |
| TLC082ID.A | D | SOIC | 8 | 75 | 505.46 | 6.76 | 3810 | 4 |
| TLC082ID.B | D | SOIC | 8 | 75 | 507 | 8 | 3940 | 4.32 |
| TLC082ID.B | D | SOIC | 8 | 75 | 505.46 | 6.76 | 3810 | 4 |
| TLC082IDGN | DGN | HVSSOP | 8 | 80 | 274 | 6.2 | 2540 | 2.5 |
| TLC082IDGN.A | DGN | HVSSOP | 8 | 80 | 274 | 6.2 | 2540 | 2.5 |
| TLC082IDGN.B | DGN | HVSSOP | 8 | 80 | 274 | 6.2 | 2540 | 2.5 |
| TLC082IP | P | PDIP | 8 | 50 | 506 | 13.97 | 11230 | 4.32 |
| TLC082IP.A | P | PDIP | 8 | 50 | 506 | 13.97 | 11230 | 4.32 |
| TLC083AID | D | SOIC | 14 | 50 | 505.46 | 6.76 | 3810 | 4 |
| TLC083AID.A | D | SOIC | 14 | 50 | 505.46 | 6.76 | 3810 | 4 |
| TLC083CN | N | PDIP | 14 | 25 | 506 | 13.97 | 11230 | 4.32 |
| TLC083CN.A | N | PDIP | 14 | 25 | 506 | 13.97 | 11230 | 4.32 |
| TLC083IDGQ | DGQ | HVSSOP | 10 | 80 | 274 | 6.2 | 2540 | 2.5 |
| TLC083IDGQ.A | DGQ | HVSSOP | 10 | 80 | 274 | 6.2 | 2540 | 2.5 |
| TLC083IDGQ.B | DGQ | HVSSOP | 10 | 80 | 274 | 6.2 | 2540 | 2.5 |
| TLC083IN | N | PDIP | 14 | 25 | 506 | 13.97 | 11230 | 4.32 |
| TLC083IN.A | N | PDIP | 14 | 25 | 506 | 13.97 | 11230 | 4.32 |
| TLC084AID | D | SOIC | 14 | 50 | 506.6 | 8 | 3940 | 4.32 |
| TLC084AID | D | SOIC | 14 | 50 | 505.46 | 6.76 | 3810 | 4 |
| TLC084AID.B | D | SOIC | 14 | 50 | 506.6 | 8 | 3940 | 4.32 |
| TLC084AID.B | D | SOIC | 14 | 50 | 505.46 | 6.76 | 3810 | 4 |
| TLC084AIN | N | PDIP | 14 | 25 | 506 | 13.97 | 11230 | 4.32 |
| TLC084AIN.B | N | PDIP | 14 | 25 | 506 | 13.97 | 11230 | 4.32 |
| TLC084AIPWP | PWP | HTSSOP | 20 | 70 | 530 | 10.2 | 3600 | 3.5 |
| TLC084AIPWP.B | PWP | HTSSOP | 20 | 70 | 530 | 10.2 | 3600 | 3.5 |
| TLC084CD | D | SOIC | 14 | 50 | 506.6 | 8 | 3940 | 4.32 |
| TLC084CD | D | SOIC | 14 | 50 | 505.46 | 6.76 | 3810 | 4 |
| TLC084CD.B | D | SOIC | 14 | 50 | 506.6 | 8 | 3940 | 4.32 |
| TLC084CD.B | D | SOIC | 14 | 50 | 505.46 | 6.76 | 3810 | 4 |

| Device | Package Name | Package Type | Pins | SPQ | L (mm) | W (mm) | T (µm) | B (mm) |
|---|---|---|---|---|---|---|---|---|
| TLC084CN | N | PDIP | 14 | 25 | 506 | 13.97 | 11230 | 4.32 |
| TLC084CN.A | N | PDIP | 14 | 25 | 506 | 13.97 | 11230 | 4.32 |
| TLC084CPWP | PWP | HTSSOP | 20 | 70 | 530 | 10.2 | 3600 | 3.5 |
| TLC084CPWP.A | PWP | HTSSOP | 20 | 70 | 530 | 10.2 | 3600 | 3.5 |
| TLC084ID | D | SOIC | 14 | 50 | 506.6 | 8 | 3940 | 4.32 |
| TLC084ID | D | SOIC | 14 | 50 | 505.46 | 6.76 | 3810 | 4 |
| TLC084ID.B | D | SOIC | 14 | 50 | 506.6 | 8 | 3940 | 4.32 |
| TLC084ID.B | D | SOIC | 14 | 50 | 505.46 | 6.76 | 3810 | 4 |
| TLC084IPWP | PWP | HTSSOP | 20 | 70 | 530 | 10.2 | 3600 | 3.5 |
| TLC084IPWP.B | PWP | HTSSOP | 20 | 70 | 530 | 10.2 | 3600 | 3.5 |
| TLC085AIN | N | PDIP | 16 | 25 | 506 | 13.97 | 11230 | 4.32 |
| TLC085AIN.B | N | PDIP | 16 | 25 | 506 | 13.97 | 11230 | 4.32 |
| TLC085AIPWP | PWP | HTSSOP | 20 | 70 | 530 | 10.2 | 3600 | 3.5 |
| TLC085AIPWP.B | PWP | HTSSOP | 20 | 70 | 530 | 10.2 | 3600 | 3.5 |
| TLC085CN | N | PDIP | 16 | 25 | 506 | 13.97 | 11230 | 4.32 |
| TLC085CN.A | N | PDIP | 16 | 25 | 506 | 13.97 | 11230 | 4.32 |
| TLC085CPWP | PWP | HTSSOP | 20 | 70 | 530 | 10.2 | 3600 | 3.5 |
| TLC085CPWP.A | PWP | HTSSOP | 20 | 70 | 530 | 10.2 | 3600 | 3.5 |

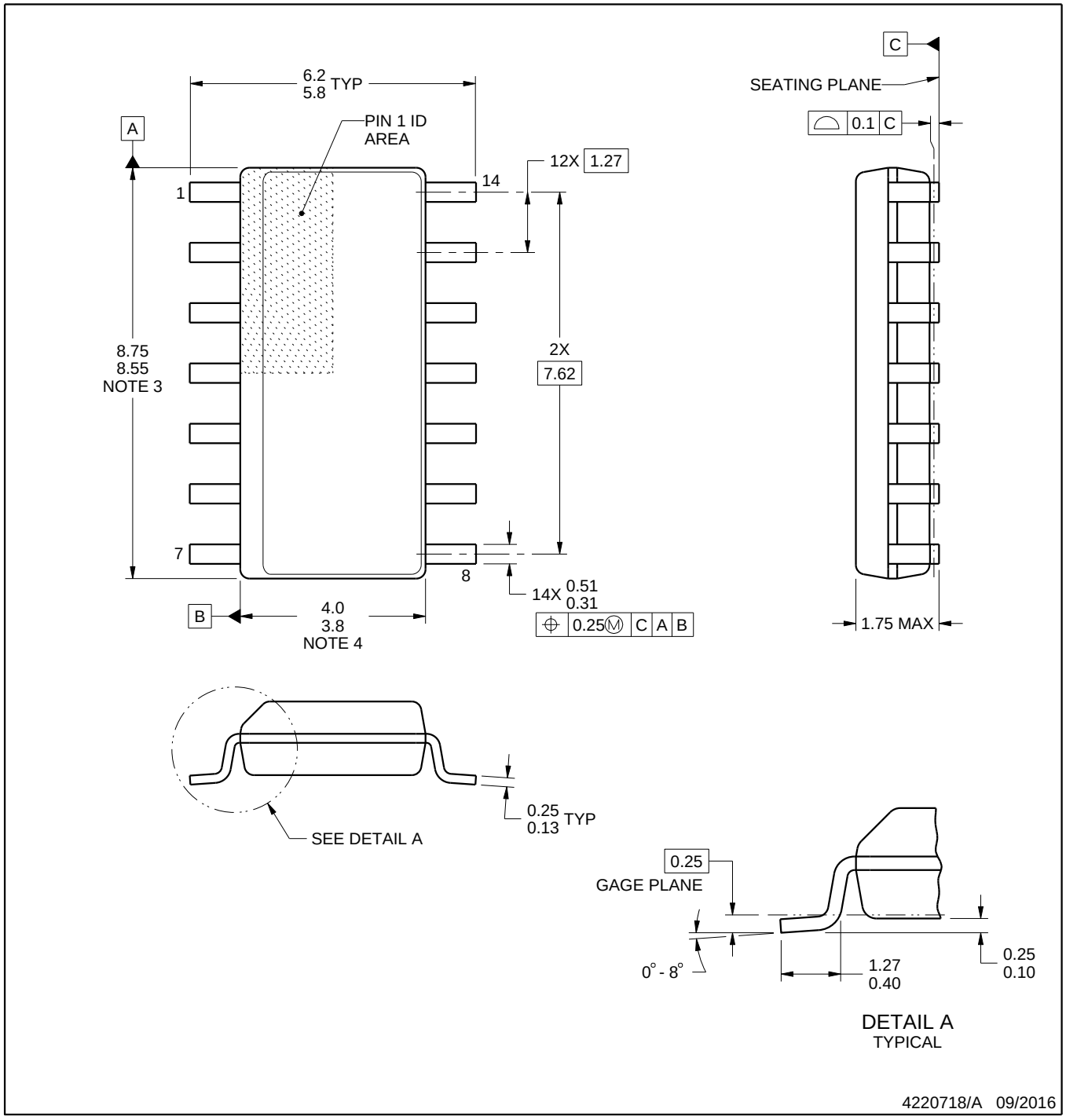


NOTES:

1. All linear dimensions are in millimeters. Dimensions in parenthesis are for reference only. Dimensioning and tolerancing per ASME Y14.5M.
2. This drawing is subject to change without notice.
3. This dimension does not include mold flash, protrusions, or gate burrs. Mold flash, protrusions, or gate burrs shall not exceed 0.15 mm, per side.
4. This dimension does not include interlead flash. Interlead flash shall not exceed 0.43 mm, per side.
5. Reference JEDEC registration MS-012, variation AB.

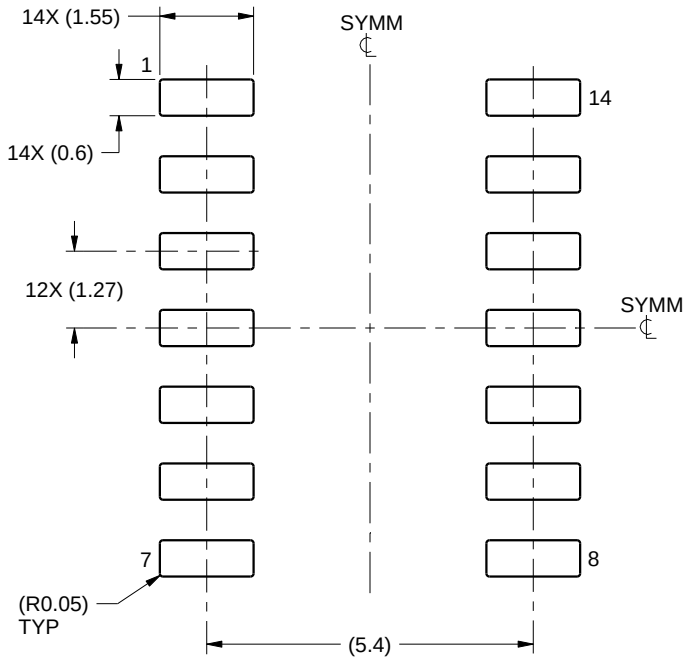


LAND PATTERN EXAMPLE
SCALE:8X

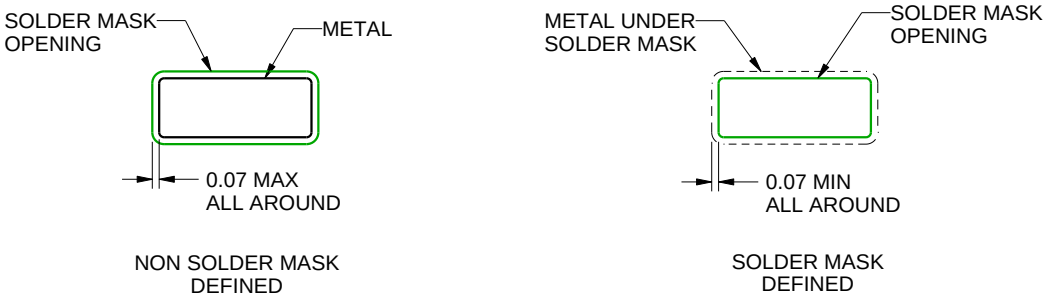


SOLDER MASK DETAILS

4220718/A 09/2016

NOTES: (continued)

6. Publication IPC-7351 may have alternate designs.
7. Solder mask tolerances between and around signal pads can vary based on board fabrication site.

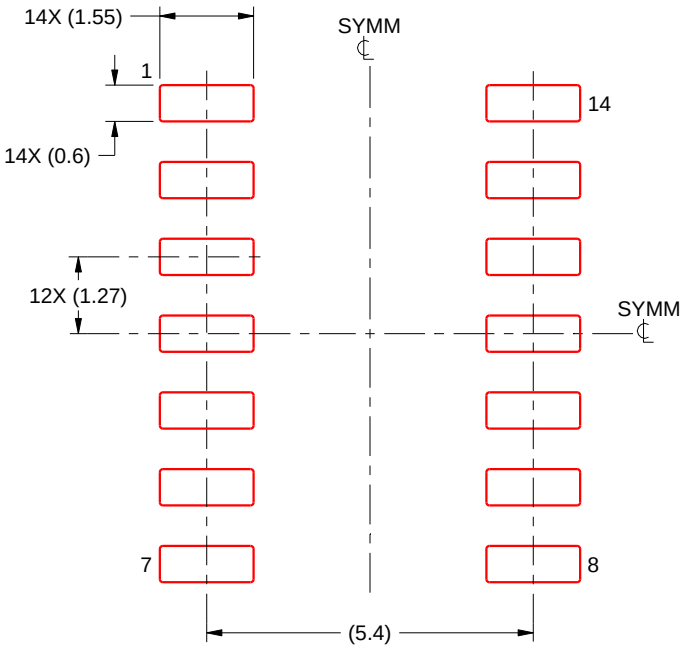


SOLDER PASTE EXAMPLE
BASED ON 0.125 mm THICK STENCIL
SCALE:8X

4220718/A 09/2016

NOTES: (continued)

8. Laser cutting apertures with trapezoidal walls and rounded corners may offer better paste release. IPC-7525 may have alternate design recommendations.
9. Board assembly site may have different recommendations for stencil design.

D (R–PDSO–G16) PLASTIC SMALL OUTLINE

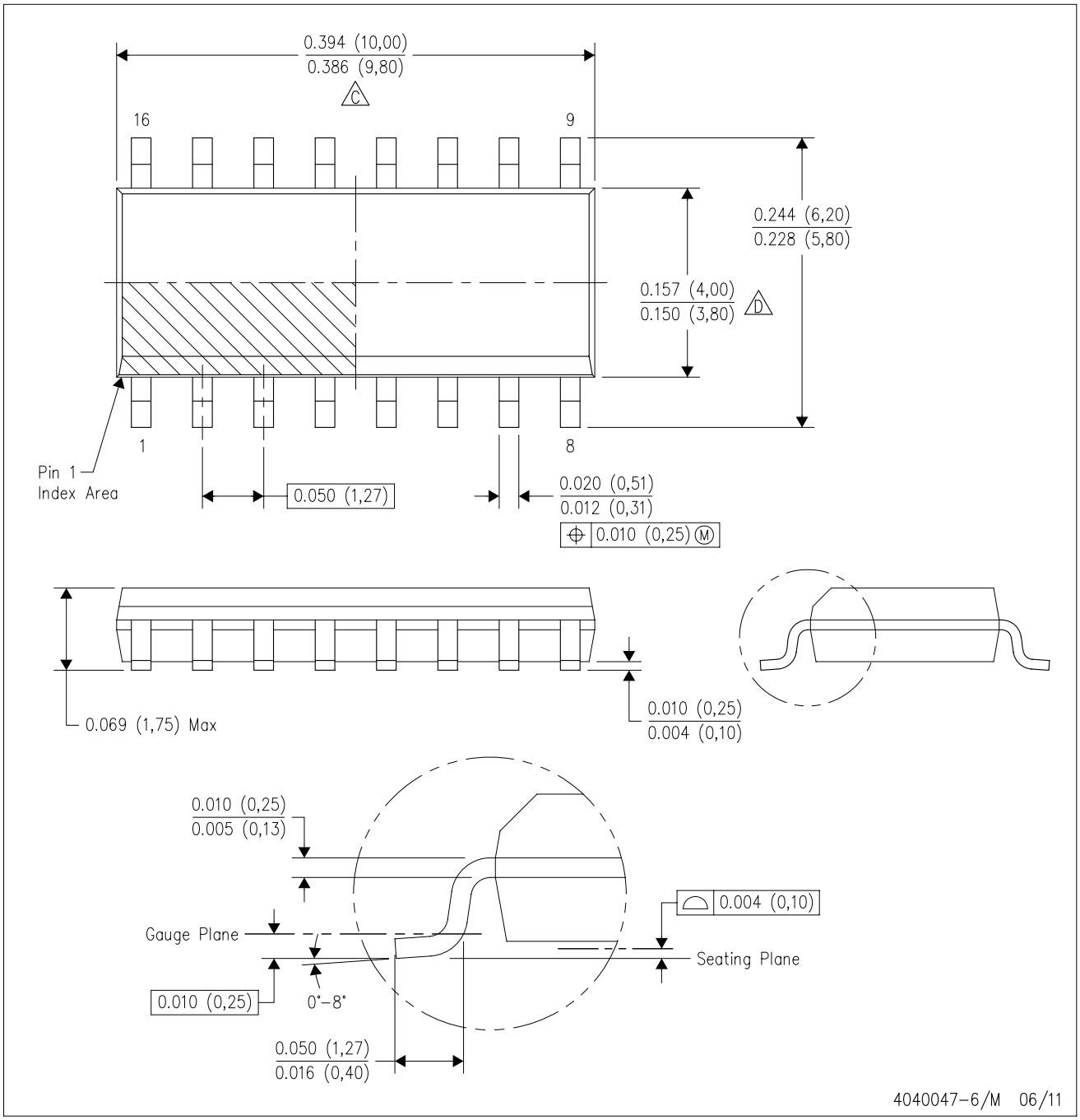


NOTES:
A. All linear dimensions are in inches (millimeters).
B. This drawing is subject to change without notice.
C. Body length does not include mold flash, protrusions, or gate burrs. Mold flash, protrusions, or gate burrs shall not exceed 0.006 (0,15) each side.
D. Body width does not include interlead flash. Interlead flash shall not exceed 0.017 (0,43) each side.
E. Reference JEDEC MS–012 variation AC.

# GENERIC PACKAGE VIEW

## DGQ 10

## PowerPAD™ HVSSOP - 1.1 mm max height

**3 x 3, 0.5 mm pitch**

PLASTIC SMALL OUTLINE

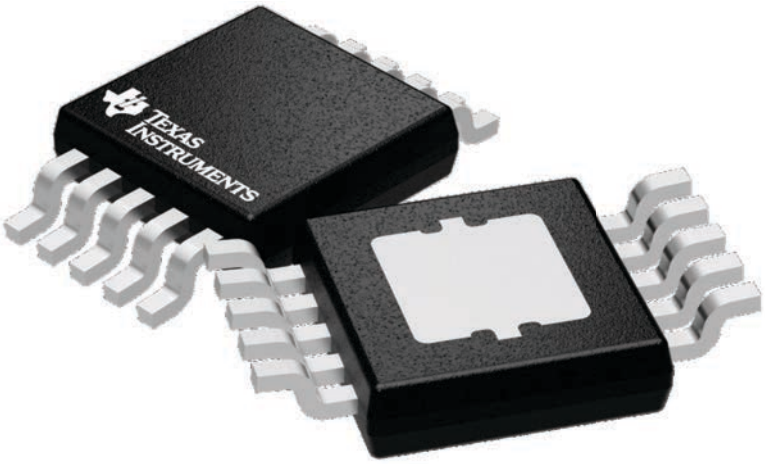


Images above are just a representation of the package family, actual package may vary.
Refer to the product data sheet for package details.

4224775/A

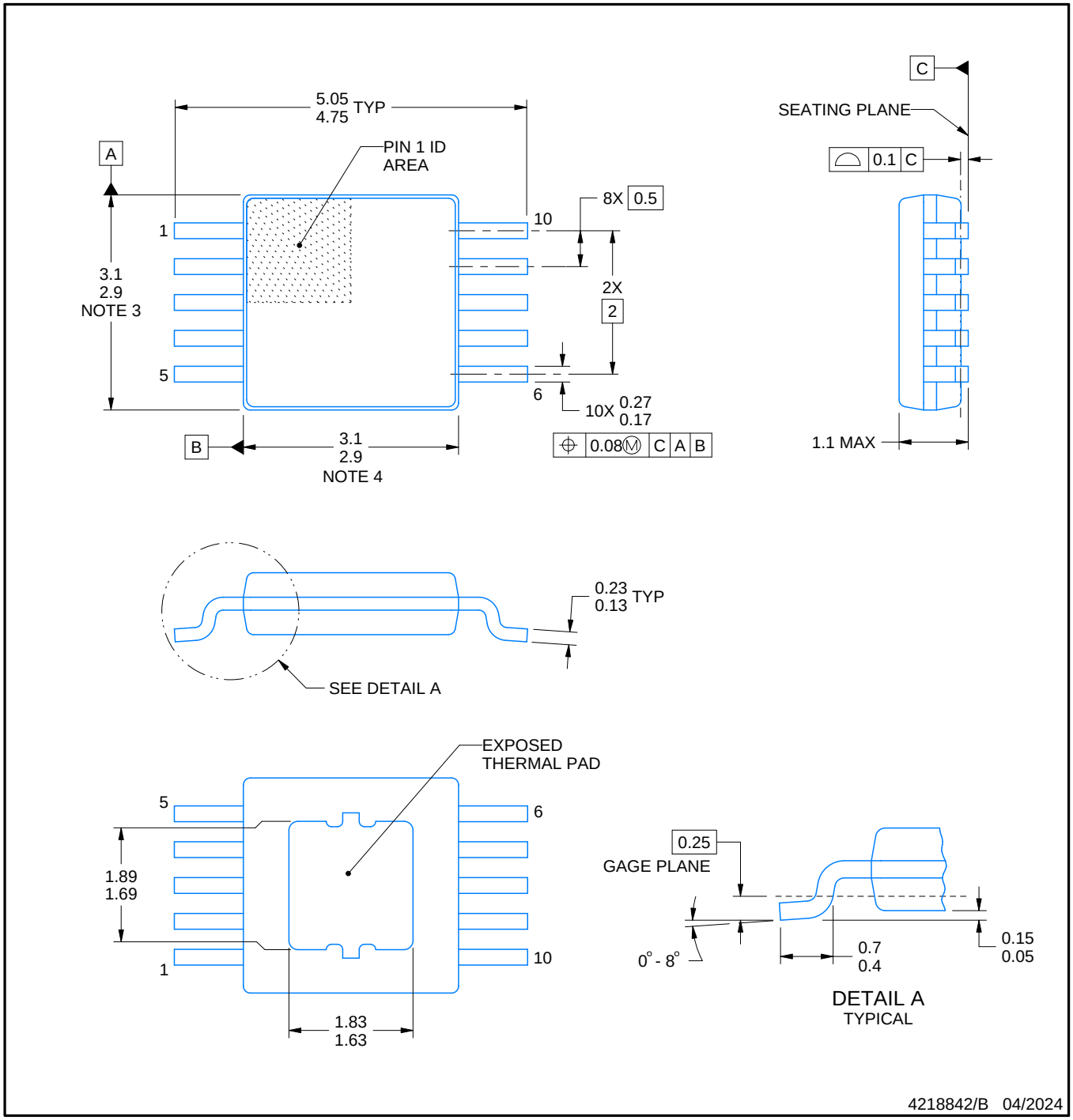


PowerPAD is a trademark of Texas Instruments.

NOTES:

1. All linear dimensions are in millimeters. Any dimensions in parenthesis are for reference only. Dimensioning and tolerancing per ASME Y14.5M.
2. This drawing is subject to change without notice.
3. This dimension does not include mold flash, protrusions, or gate burrs. Mold flash, protrusions, or gate burrs shall not exceed 0.15 mm per side.
4. This dimension does not include interlead flash. Interlead flash shall not exceed 0.25 mm per side.
5. Reference JEDEC registration MO-187, variation BA-T.

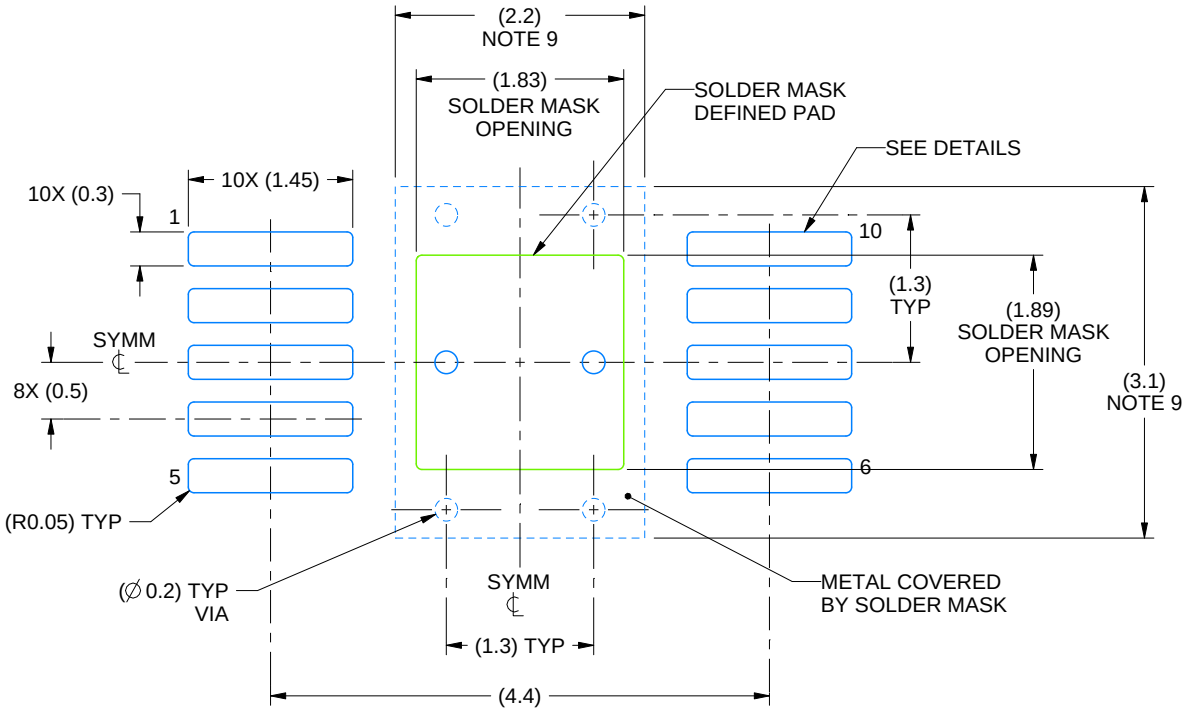


LAND PATTERN EXAMPLE
SCALE:15X

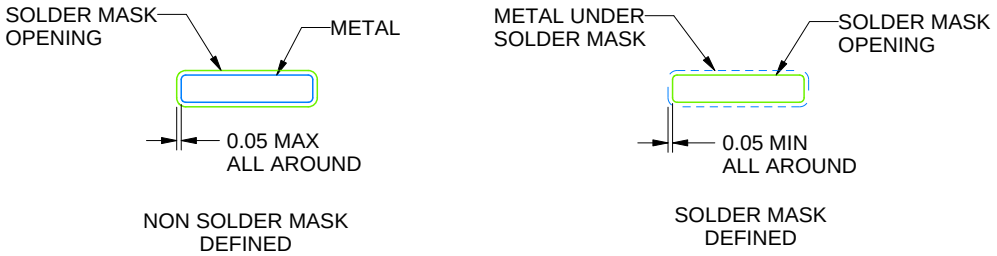


SOLDER MASK DETAILS

4218842/B 04/2024

NOTES: (continued)

6. Publication IPC-7351 may have alternate designs.
7. Solder mask tolerances between and around signal pads can vary based on board fabrication site.
8. This package is designed to be soldered to a thermal pad on the board. For more information, see Texas Instruments literature numbers SLMA002 (www.ti.com/lit/slma002) and SLMA004 (www.ti.com/lit/slma004).
9. Size of metal pad may vary due to creepage requirement.

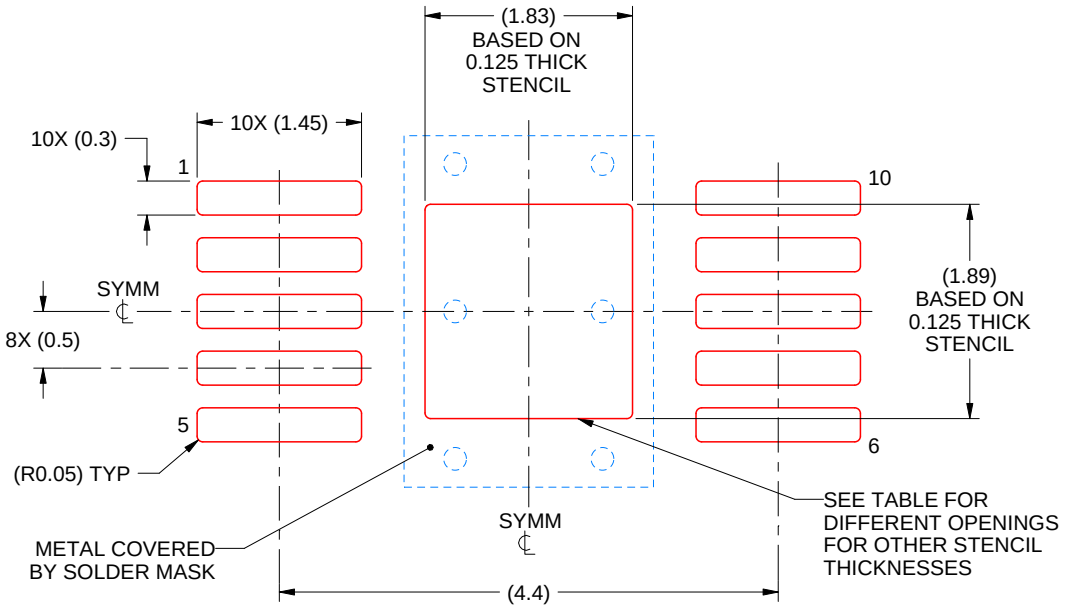


SOLDER PASTE EXAMPLE
EXPOSED PAD
100% PRINTED SOLDER COVERAGE BY AREA
SCALE:15X

| STENCIL THICKNESS | SOLDER STENCIL OPENING |
|---|---|
| 0.1 | 2.05 X 2.11 |
| 0.125 | 1.83 X 1.89 (SHOWN) |
| 0.150 | 1.67 X 1.73 |
| 0.175 | 1.55 X 1.60 |

4218842/B 04/2024

NOTES: (continued)

10. Laser cutting apertures with trapezoidal walls and rounded corners may offer better paste release. IPC-7525 may have alternate design recommendations.
11. Board assembly site may have different recommendations for stencil design.

# GENERIC PACKAGE VIEW

## DGN 8

## PowerPAD™ HVSSOP - 1.1 mm max height

**3 x 3, 0.65 mm pitch**

SMALL OUTLINE PACKAGE

This image is a representation of the package family, actual package may vary.
Refer to the product data sheet for package details.

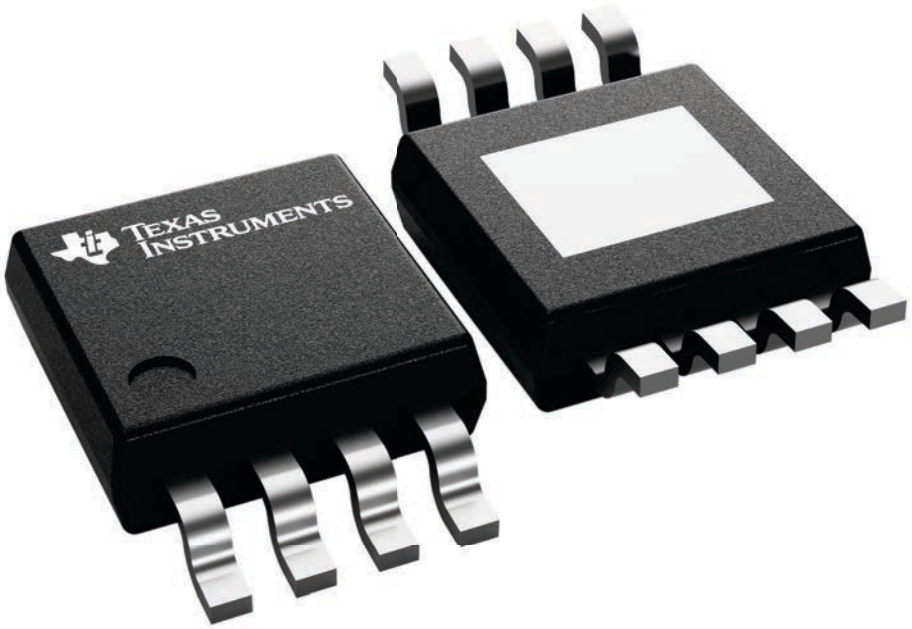


4225482/B

# PACKAGE OUTLINE

## DGN0008D

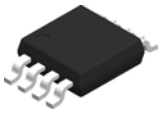

## PowerPAD™ VSSOP - 1.1 mm max height

SMALL OUTLINE PACKAGE

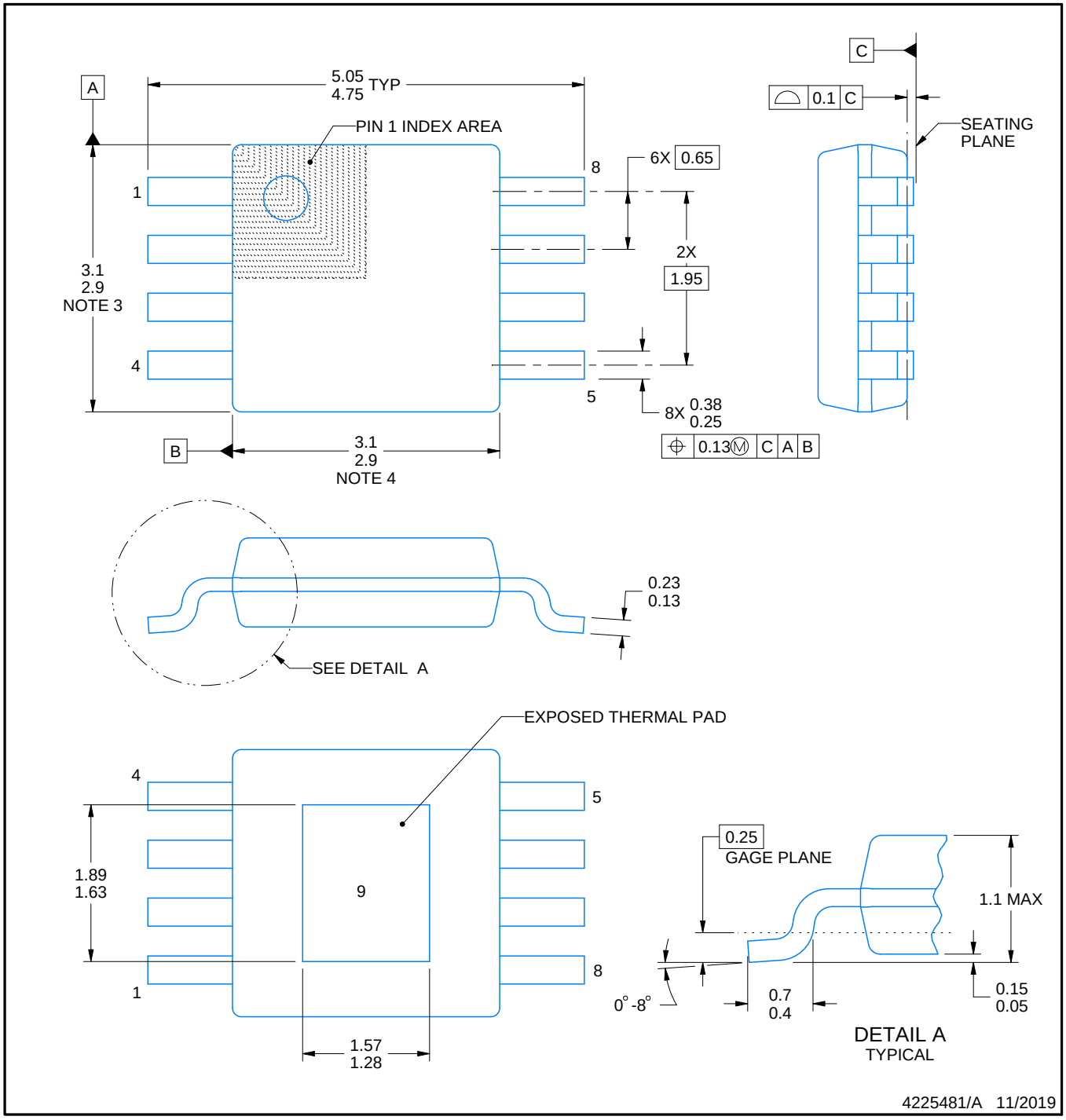


PowerPAD is a trademark of Texas Instruments.

NOTES:

1. All linear dimensions are in millimeters. Any dimensions in parenthesis are for reference only. Dimensioning and tolerancing per ASME Y14.5M.
2. This drawing is subject to change without notice.
3. This dimension does not include mold flash, protrusions, or gate burrs. Mold flash, protrusions, or gate burrs shall not exceed 0.15 mm per side.
4. This dimension does not include interlead flash. Interlead flash shall not exceed 0.25 mm per side.
5. Reference JEDEC registration MO-187.

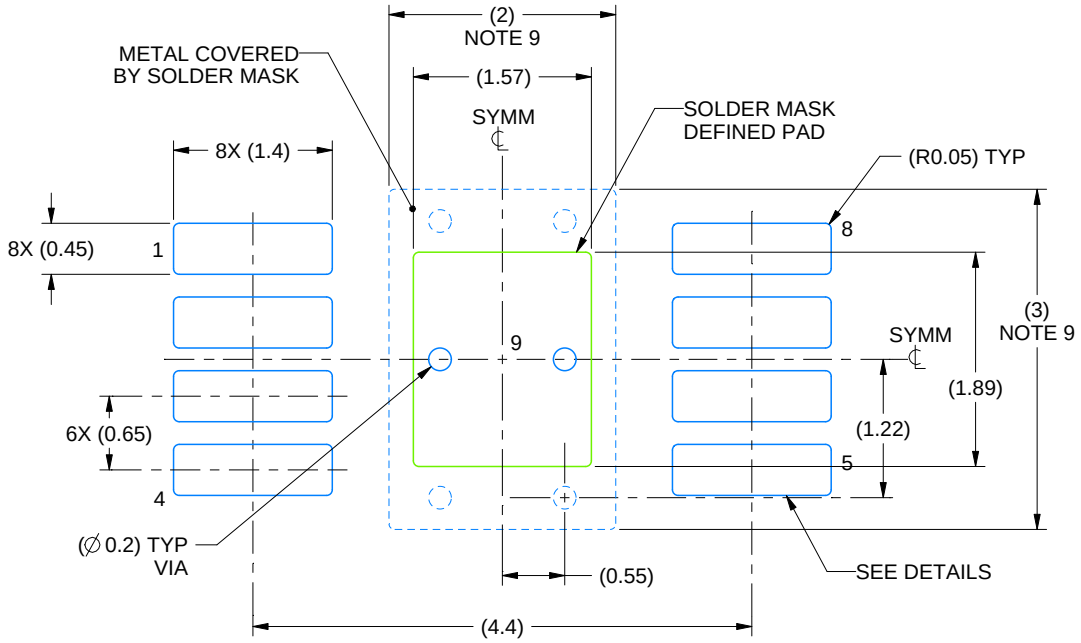


LAND PATTERN EXAMPLE
EXPOSED METAL SHOWN
SCALE: 15X

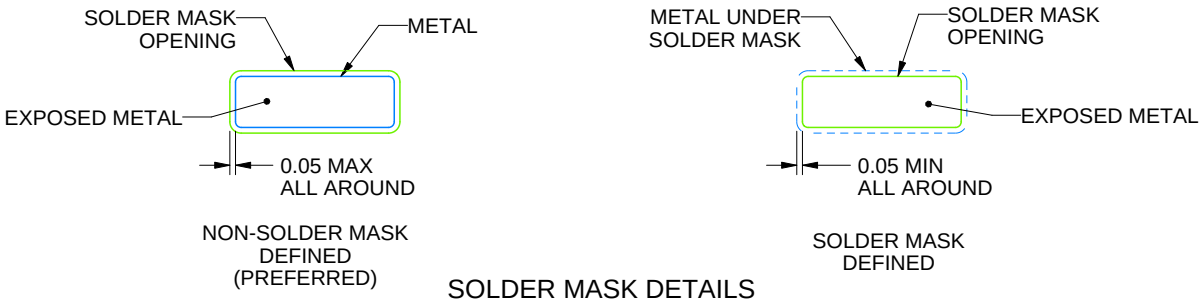


SOLDER MASK DETAILS

4225481/A 11/2019

NOTES: (continued)

6. Publication IPC-7351 may have alternate designs.
7. Solder mask tolerances between and around signal pads can vary based on board fabrication site.
8. Vias are optional depending on application, refer to device data sheet. If any vias are implemented, refer to their locations shown on this view. It is recommended that vias under paste be filled, plugged or tented.
9. Size of metal pad may vary due to creepage requirement.

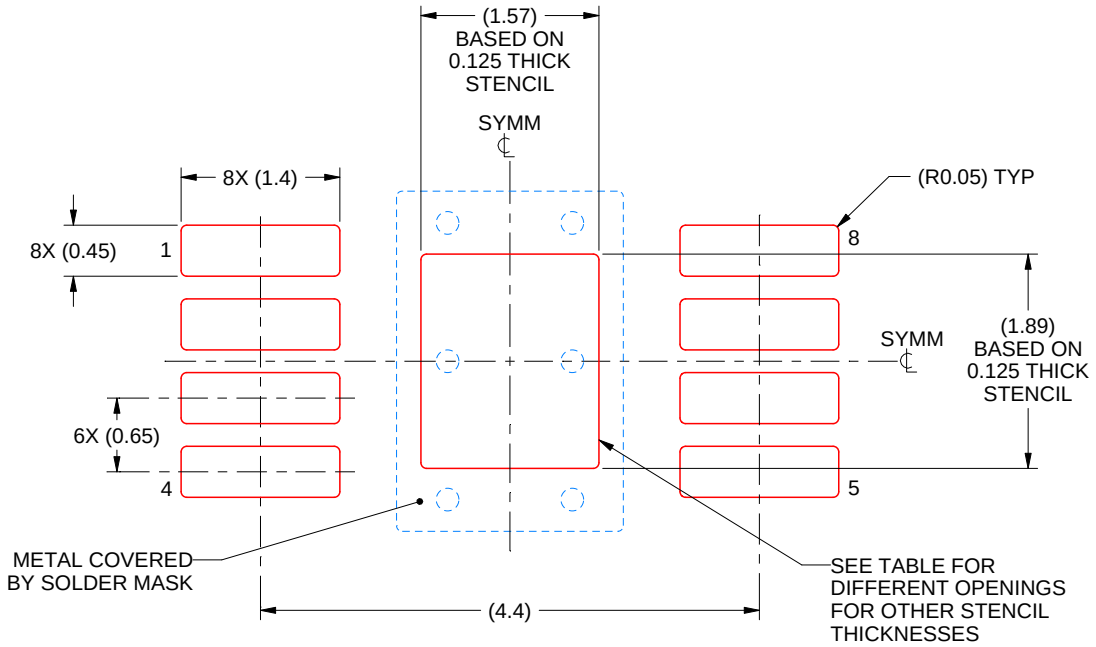


SOLDER PASTE EXAMPLE
EXPOSED PAD 9:
100% PRINTED SOLDER COVERAGE BY AREA
SCALE: 15X

| STENCIL THICKNESS | SOLDER STENCIL OPENING |
|---|---|
| 0.1 | 1.76 X 2.11 |
| 0.125 | 1.57 X 1.89 (SHOWN) |
| 0.15 | 1.43 X 1.73 |
| 0.175 | 1.33 X 1.60 |

4225481/A 11/2019

NOTES: (continued)

10. Laser cutting apertures with trapezoidal walls and rounded corners may offer better paste release. IPC-7525 may have alternate design recommendations.
11. Board assembly site may have different recommendations for stencil design.

# GENERIC PACKAGE VIEW

## PWP 20

## HTSSOP - 1.2 mm max height

**6.5 x 4.4, 0.65 mm pitch**

SMALL OUTLINE PACKAGE

This image is a representation of the package family, actual package may vary.
Refer to the product data sheet for package details.

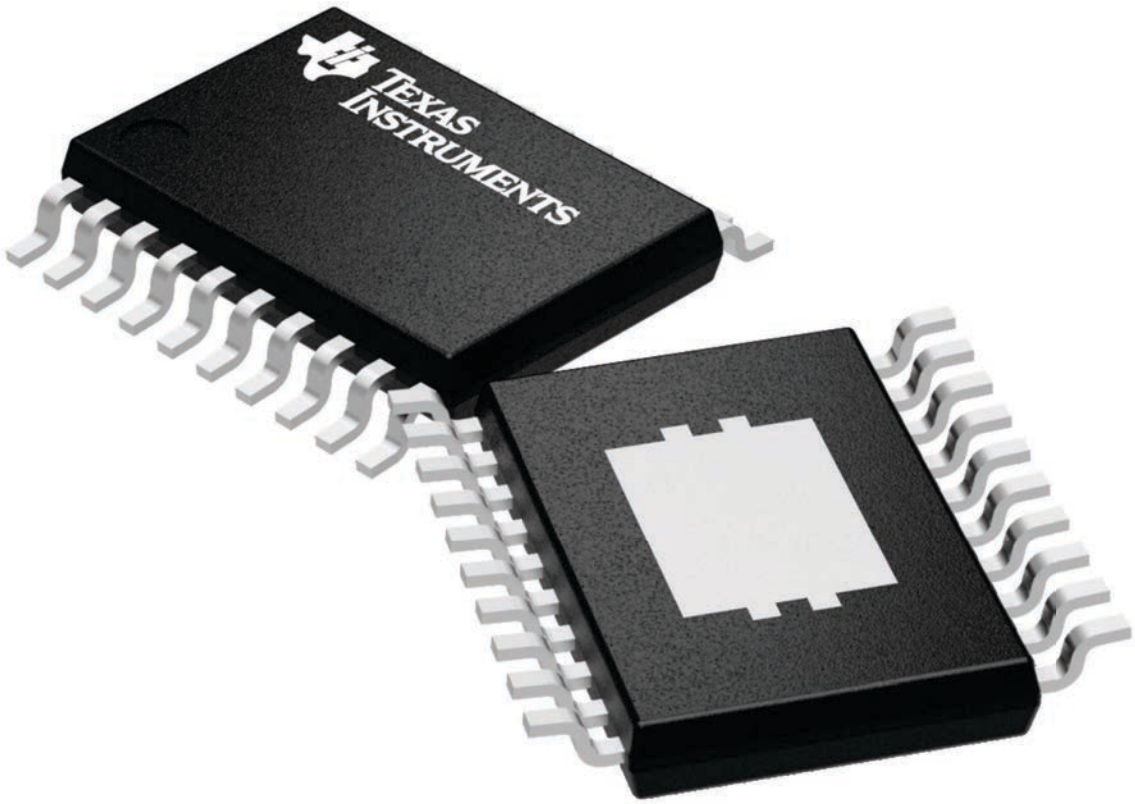


4224669/A

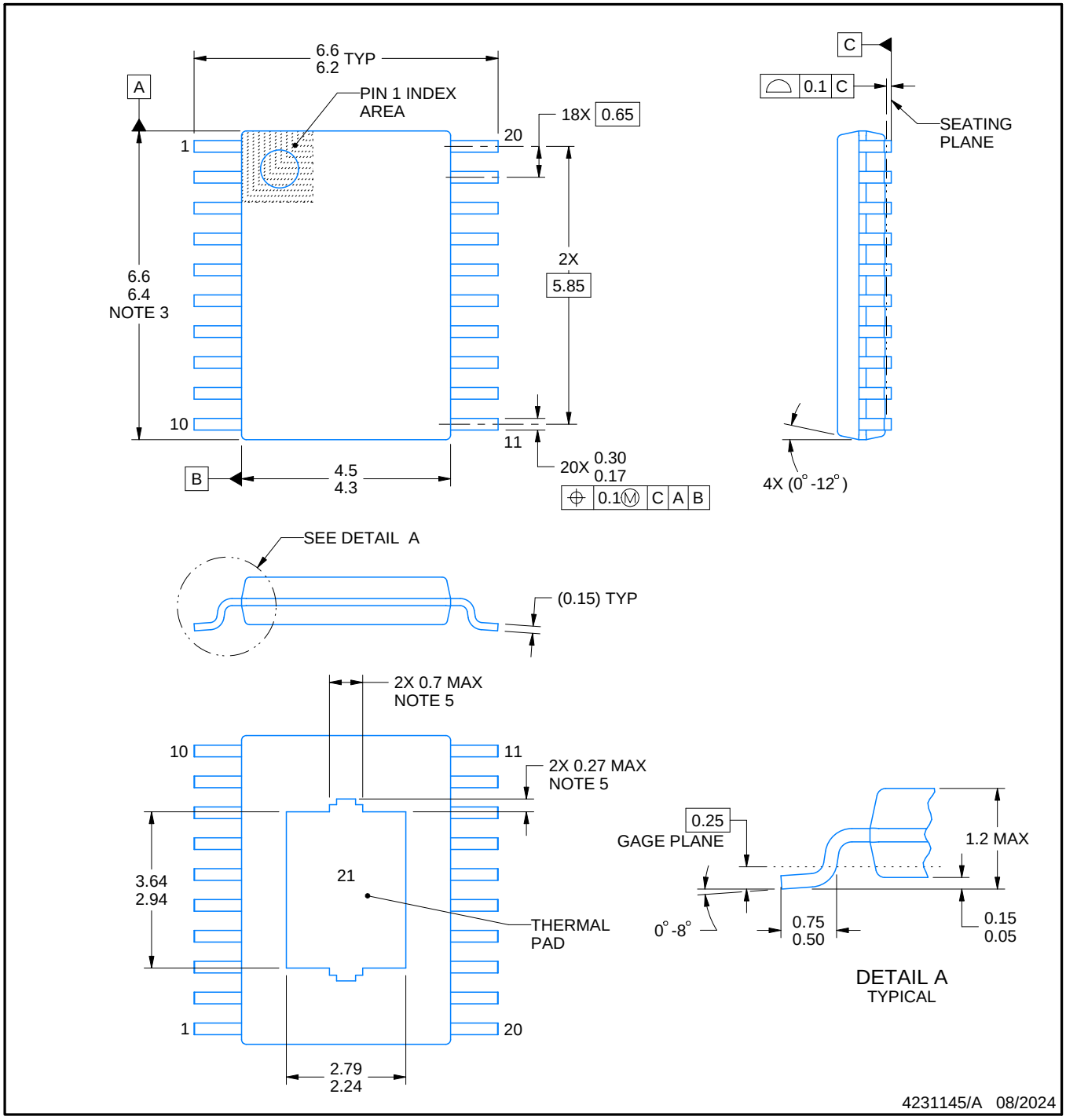


PowerPAD is a trademark of Texas Instruments.

NOTES:

1. All linear dimensions are in millimeters. Any dimensions in parenthesis are for reference only. Dimensioning and tolerancing per ASME Y14.5M.
2. This drawing is subject to change without notice.
3. This dimension does not include mold flash, protrusions, or gate burrs. Mold flash, protrusions, or gate burrs shall not exceed 0.15 mm per side.
4. Reference JEDEC registration MO-153.
5. Features may differ or may not be present.

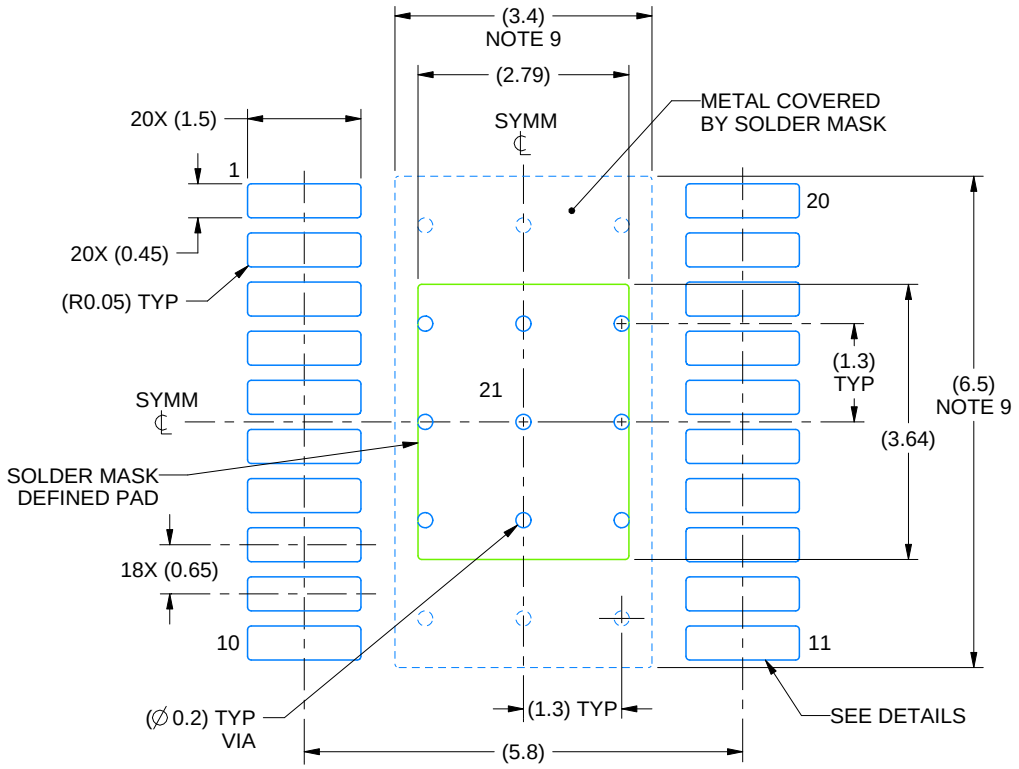


LAND PATTERN EXAMPLE
EXPOSED METAL SHOWN
SCALE: 10X

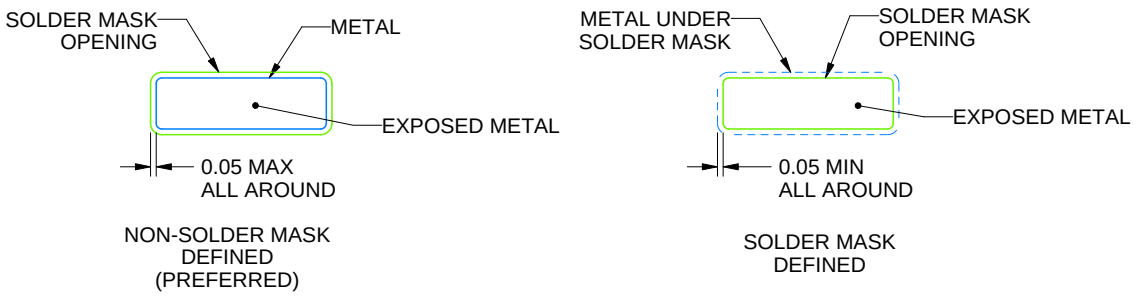


SOLDER MASK DETAILS

4231145/A 08/2024

NOTES: (continued)

6. Publication IPC-7351 may have alternate designs.
7. Solder mask tolerances between and around signal pads can vary based on board fabrication site.
8. This package is designed to be soldered to a thermal pad on the board. For more information, see Texas Instruments literature numbers SLMA002 (www.ti.com/lit/slma002) and SLMA004 (www.ti.com/lit/slma004).
9. Size of metal pad may vary due to creepage requirement.
10. Vias are optional depending on application, refer to device data sheet. It is recommended that vias under paste be filled, plugged or tented.

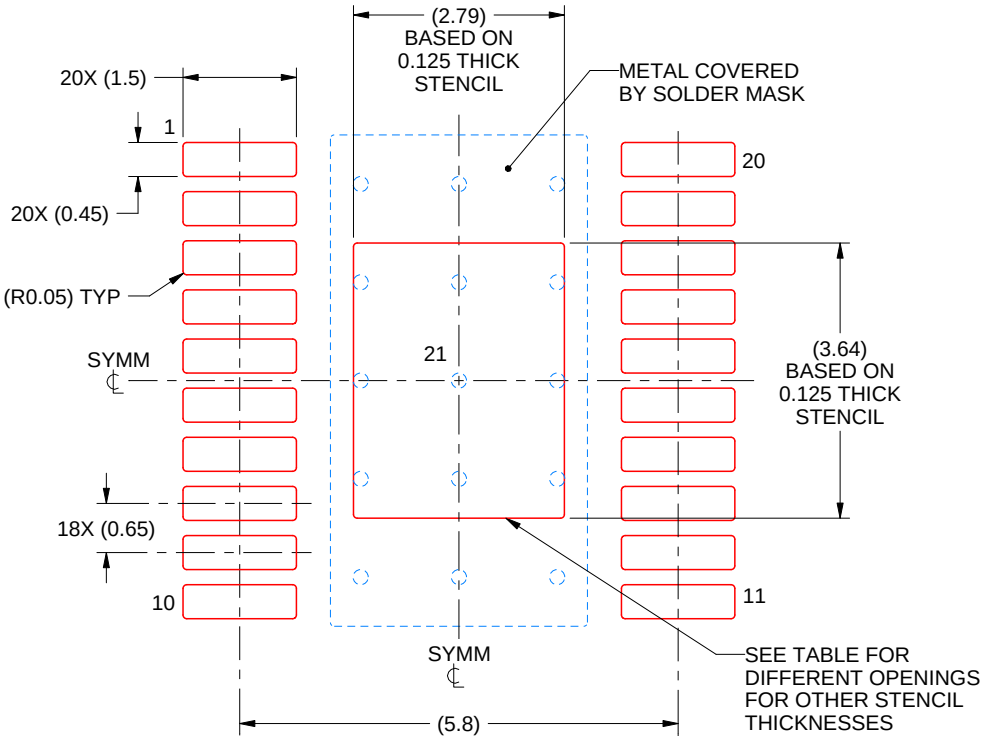


SOLDER PASTE EXAMPLE
BASED ON 0.125 mm THICK STENCIL
SCALE: 10X

| STENCIL THICKNESS | SOLDER STENCIL OPENING |
|---|---|
| 0.1 | 3.12 X 4.07 |
| 0.125 | 2.79 X 3.64 (SHOWN) |
| 0.15 | 2.55 X 3.32 |
| 0.175 | 2.36 X 3.08 |

4231145/A 08/2024

NOTES: (continued)

11. Laser cutting apertures with trapezoidal walls and rounded corners may offer better paste release. IPC-7525 may have alternate design recommendations.
12. Board assembly site may have different recommendations for stencil design.

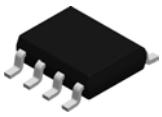

# PACKAGE OUTLINE

## D0008A

## SOIC - 1.75 mm max height

SMALL OUTLINE INTEGRATED CIRCUIT

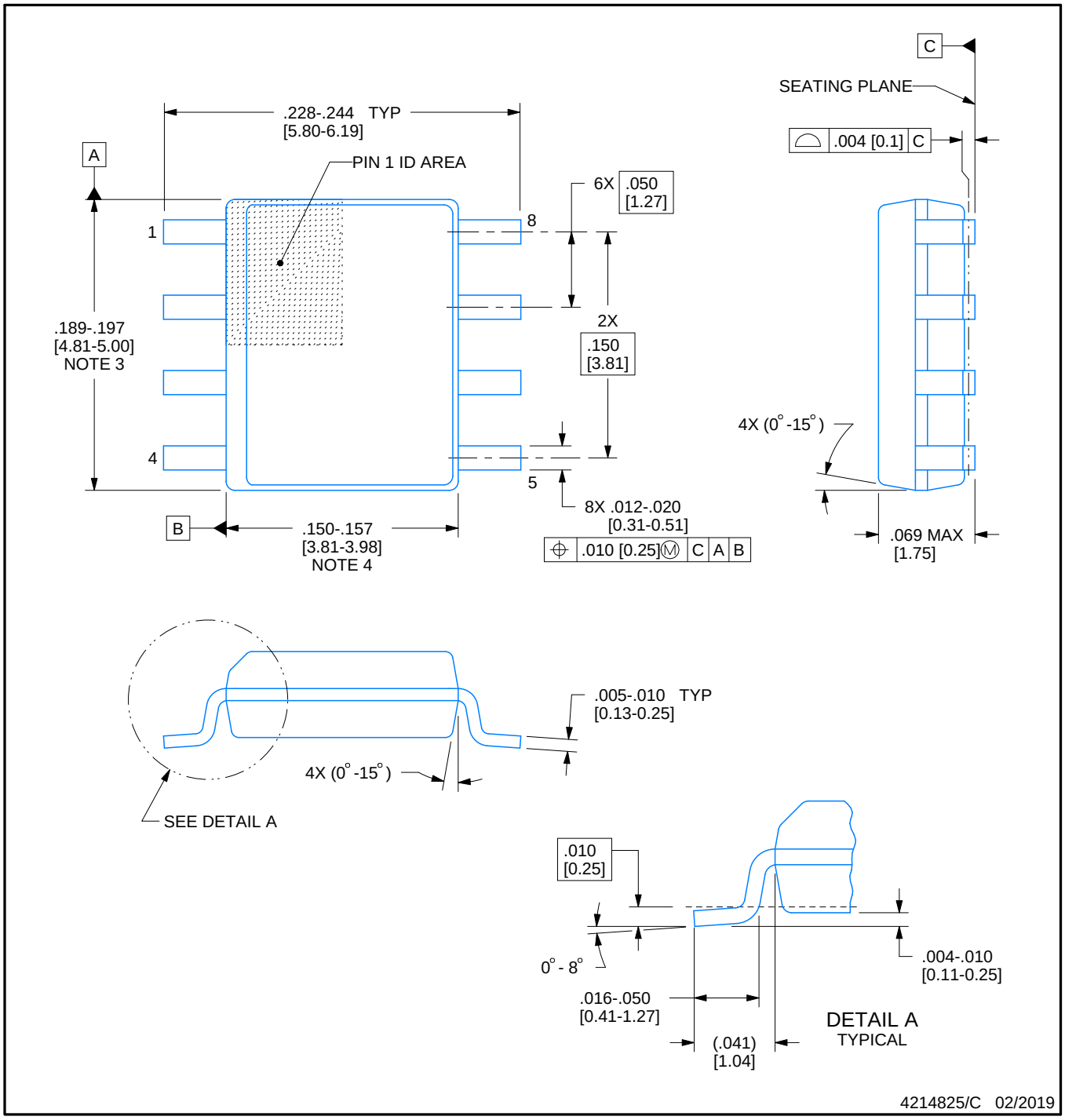


NOTES:

1. Linear dimensions are in inches [millimeters]. Dimensions in parenthesis are for reference only. Controlling dimensions are in inches. Dimensioning and tolerancing per ASME Y14.5M.
2. This drawing is subject to change without notice.
3. This dimension does not include mold flash, protrusions, or gate burrs. Mold flash, protrusions, or gate burrs shall not exceed .006 [0.15] per side.
4. This dimension does not include interlead flash.
5. Reference JEDEC registration MS-012, variation AA.

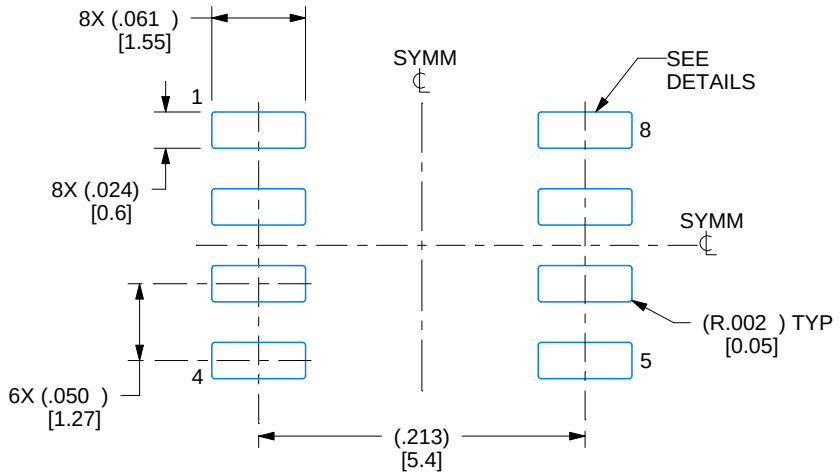


LAND PATTERN EXAMPLE
EXPOSED METAL SHOWN
SCALE:8X

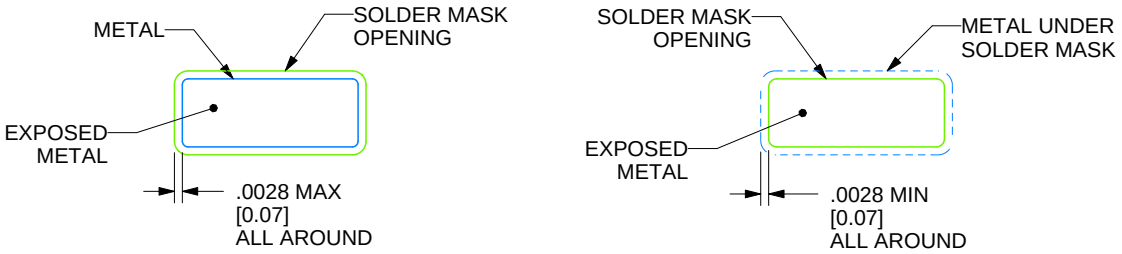


SOLDER MASK DETAILS

4214825/C 02/2019

NOTES: (continued)

6. Publication IPC-7351 may have alternate designs.
7. Solder mask tolerances between and around signal pads can vary based on board fabrication site.

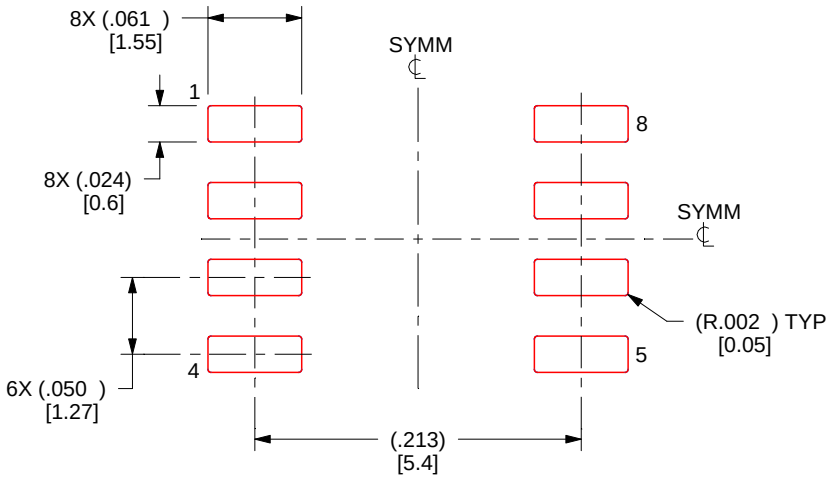


SOLDER PASTE EXAMPLE
BASED ON .005 INCH [0.125 MM] THICK STENCIL
SCALE:8X

4214825/C 02/2019

NOTES: (continued)

8. Laser cutting apertures with trapezoidal walls and rounded corners may offer better paste release. IPC-7525 may have alternate design recommendations.
9. Board assembly site may have different recommendations for stencil design.

P (R–PDIP–T8) PLASTIC DUAL–IN–LINE PACKAGE

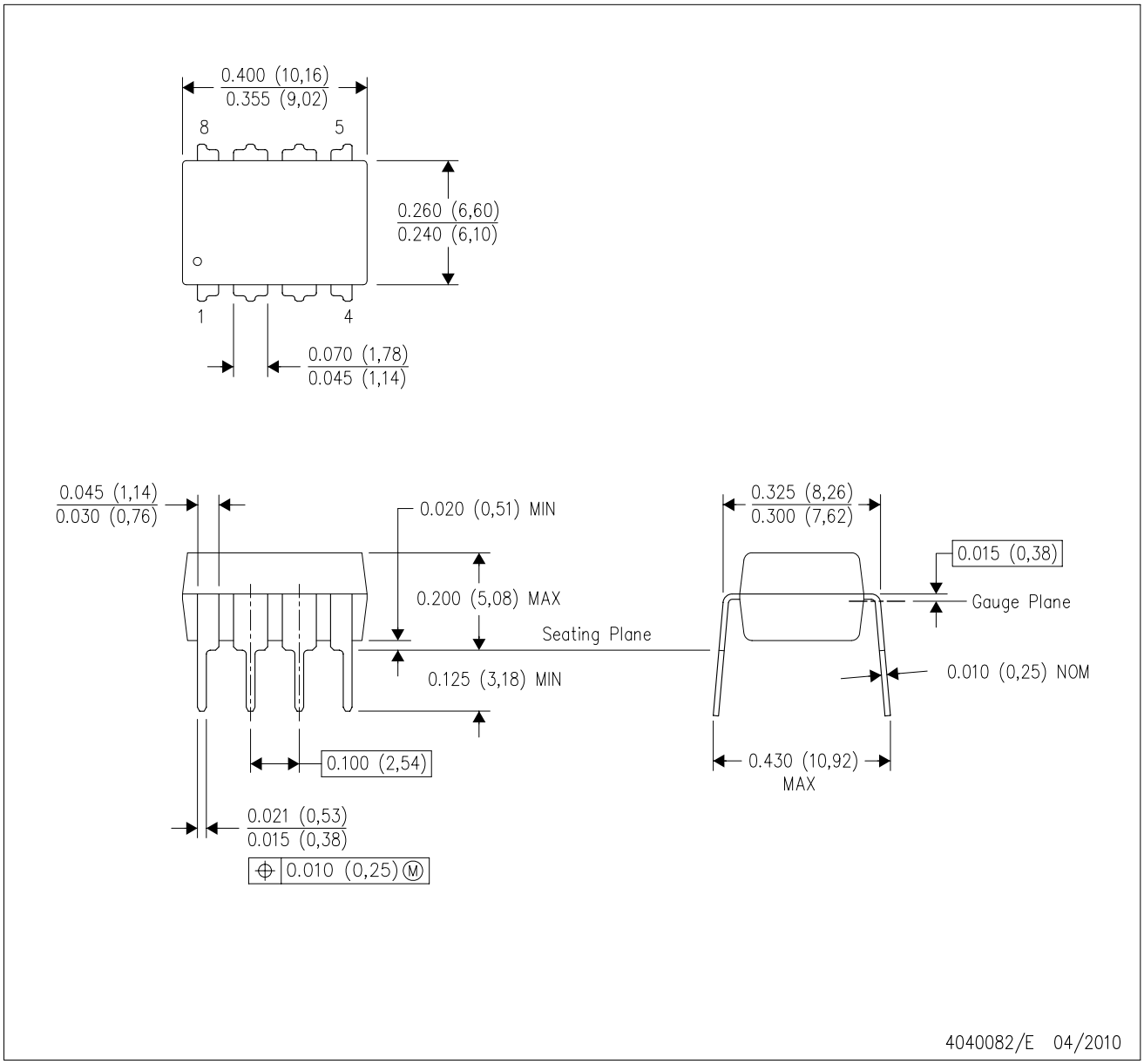


NOTES:
A. All linear dimensions are in inches (millimeters).
B. This drawing is subject to change without notice.
C. Falls within JEDEC MS–001 variation BA.

## N (R–PDIP–T**) PLASTIC DUAL–IN–LINE PACKAGE

16 PINS SHOWN

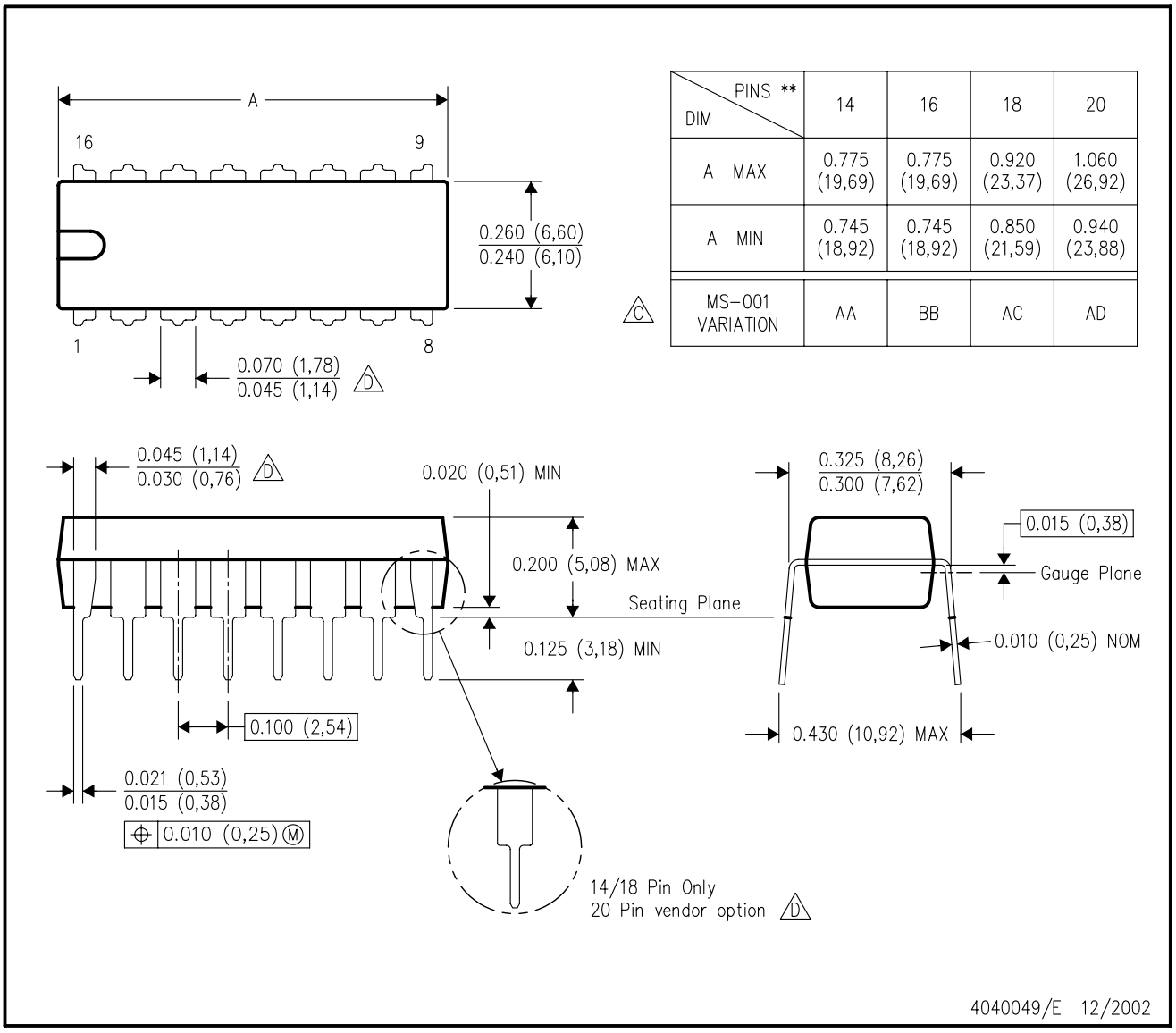


| DIM \ PINS ** | 14 | 16 | 18 | 20 |
|---|---|---|---|---|
| A MAX | 0.775 (19,69) | 0.775 (19,69) | 0.920 (23,37) | 1.060 (26,92) |
| A MIN | 0.745 (18,92) | 0.745 (18,92) | 0.850 (21,59) | 0.940 (23,88) |
| MS–001 VARIATION (C) | AA | BB | AC | AD |

NOTES:
A. All linear dimensions are in inches (millimeters).
B. This drawing is subject to change without notice.
C. Falls within JEDEC MS–001, except 18 and 20 pin minimum body length (Dim A).
D. The 20 pin end lead shoulder width is a vendor option, either half or full width.

# IMPORTANT NOTICE AND DISCLAIMER

TI PROVIDES TECHNICAL AND RELIABILITY DATA (INCLUDING DATASHEETS), DESIGN RESOURCES (INCLUDING REFERENCE DESIGNS), APPLICATION OR OTHER DESIGN ADVICE, WEB TOOLS, SAFETY INFORMATION, AND OTHER RESOURCES “AS IS” AND WITH ALL FAULTS, AND DISCLAIMS ALL WARRANTIES, EXPRESS AND IMPLIED, INCLUDING WITHOUT LIMITATION ANY IMPLIED WARRANTIES OF MERCHANTABILITY, FITNESS FOR A PARTICULAR PURPOSE OR NON-INFRINGEMENT OF THIRD PARTY INTELLECTUAL PROPERTY RIGHTS.

These resources are intended for skilled developers designing with TI products. You are solely responsible for (1) selecting the appropriate TI products for your application, (2) designing, validating and testing your application, and (3) ensuring your application meets applicable standards, and any other safety, security, regulatory or other requirements.

These resources are subject to change without notice. TI grants you permission to use these resources only for development of an application that uses the TI products described in the resource. Other reproduction and display of these resources is prohibited. No license is granted to any other TI intellectual property right or to any third party intellectual property right. TI disclaims responsibility for, and you fully indemnify TI and its representatives against any claims, damages, costs, losses, and liabilities arising out of your use of these resources.

TI’s products are provided subject to TI’s Terms of Sale, TI’s General Quality Guidelines, or other applicable terms available either on ti.com or provided in conjunction with such TI products. TI’s provision of these resources does not expand or otherwise alter TI’s applicable warranties or warranty disclaimers for TI products. Unless TI explicitly designates a product as custom or customer-specified, TI products are standard, catalog, general purpose devices.

TI objects to and rejects any additional or different terms you may propose.

Copyright © 2026, Texas Instruments Incorporated

Last updated 10/2025