- **Supply Voltage Range . . . 1.8 V to 3.6 V**
- **Rail-to-Rail Input/Output**
- **High Bandwidth . . . 8 MHz**
- **High Slew Rate . . . 4.8 V/µs**
- **V_{ICR} Exceeds Rails . . . −0.2 V to V_{DD}+ 0.2**
- **Supply Current . . . 650 µA/Channel**
- **Input Noise Voltage . . . 9 nV/√Hz at 10 kHz**
- **Specified Temperature Range:**
  0°C to 70°C . . . Commercial Grade
  −40°C to 125°C . . . Industrial Grade
- **Ultrasmall Packaging**
- **Universal Operational Amplifier EVM**

Operational Amplifier

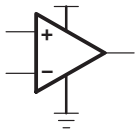

DIFFERENTIAL VOLTAGE AMPLIFICATION AND PHASE vs FREQUENCY

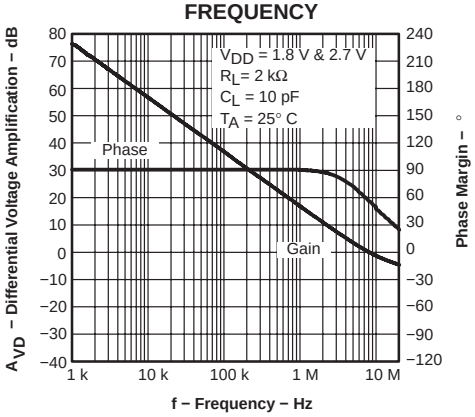

description

The TLV278x single supply operational amplifiers provide rail-to-rail input and output capability. The TLV278x takes the minimum operating supply voltage down to 1.8 V over the extended industrial temperature range (−40°C to 125°C) while adding the rail-to-rail output swing feature. The TLV278x also provides 8 MHz bandwidth from only 650 µA of supply current. The maximum recommended supply voltage is 3.6 V, which allows the devices to be operated from (±1.8 V supplies down to ±0.9 V) two rechargeable cells.

The combination of wide bandwidth, low noise, and low distortion makes it ideal for high speed and high resolution data converter applications.

All members are available in PDIP, SOIC, and the newer, smaller SOT-23 (singles), MSOP (duals), and TSSOP (quads).

FAMILY PACKAGE TABLE

DEVICE	V_{DD} [V]	V_{IO} [µV]	I_{DD}/ch [µA]	I_{IB} [pA]	GBW [MHz]	SLEW RATE [V/µs]	$V_{n, 1 kHz}$ [nV/√Hz]	I_O [mA]	SHUTDOWN	RAIL-TO-RAIL
TLV278x(A)	1.8−3.6	250	650	2.5	8	5	18	10	Y	I/O
TLV276x(A)	1.8−3.6	550	20	3	0.5	0.23	95	5	Y	I/O
TLV246x(A)	2.7−6	150	550	1300	6.4	1.6	11	25	Y	I/O
TLV247x(A)	2.7−6	250	600	2.5	2.8	1.5	15	20	Y	I/O
TLV244x(A)	2.7−10	300	750	1	1.81	1.4	16	2	—	O
TLV277x(A)	2.5−5.5	360	1000	2	5.1	10.5	17	6	Y	O

Please be aware that an important notice concerning availability, standard warranty, and use in critical applications of Texas Instruments semiconductor products and disclaimers thereto appears at the end of this data sheet.

PRODUCTION DATA information is current as of publication date. Products conform to specifications per the terms of Texas Instruments standard warranty. Production processing does not necessarily include testing of all parameters.

Copyright © 2000−2005, Texas Instruments Incorporated

TLV2780 and TLV2781 AVAILABLE OPTIONS(1)

T_A	V_{IO}max AT 25°C	PACKAGED DEVICES			
		SMALL OUTLINE (D)†	SOT-23 (DBV)‡	SOT-23 SYMBOL	PLASTIC DIP (P)
0°C to 70°C	3000 µV	TLV2780CD TLV2781CD	TLV2780CDBV TLV2781CDBV	VASC VATC	— —
-40°C to 125°C	3000 µV	TLV2780ID TLV2781ID	TLV2780IDBV TLV2781IDBV	VASI VATI	TLV2780IP TLV2781IP
	2000 µV	TLV2780AID TLV2781AID	— —	— —	— —

† This package is available taped and reeled. To order this packaging option, add an **R** suffix to the part number (e.g., TLV2780CDR).
‡ This package is only available taped and reeled. For standard quantities (3,000 pieces per reel), add an **R** suffix (i.e., TLV2780CDBVR). For smaller quantities (250 pieces per mini-reel), add a **T** suffix to the part number (e.g. TLV2780CDBVT).

TLV2782 and TLV2783 AVAILABLE OPTIONS(1)

T_A	V_{IO}max AT 25°C	PACKAGED DEVICES						
		SMALL OUTLINE† (D)	MSOP (DGK)†	MSOP SYMBOL	MSOP (DGS)†	MSOP SYMBOL	PLASTIC DIP (N)	PLASTIC DIP (P)
0°C to 70°C	3000 µV	TLV2782CD TLV2783CD	TLV2782CDGK —	xxTIADL —	— TLV2783CDGS	— xxTIADN	— —	— —
−40°C to 125°C	3000 µV	TLV2782ID TLV2783ID	TLV2782IDGK —	xxTIADM —	— TLV2783IDGS	— xxTIADO	— TLV2783IN	TLV2782IP —
	2000 µV	TLV2782AID TLV2783AID	— —	— —	— —	— —	— —	— —

† This package is available taped and reeled. To order this packaging option, add an **R** suffix to the part number (e.g., TLV2782CDR).

TLV2784 and TLV2785 AVAILABLE OPTIONS(1)

T_A	V_{IO}max AT 25°C	PACKAGED DEVICES		
		SMALL OUTLINE (D)	PLASTIC DIP (N)	TSSOP† (PW)
0°C to 70°C	3000 µV	TLV2784CD TLV2785CD	— —	TLV2784CPW TLV2785CPW
−40°C to 125°C	3000 µV	TLV2784ID TLV2785ID	TLV2784IN TLV2785IN	TLV2784IPW TLV2785IPW
	2000 µV	TLV2784AID TLV2785AID	— —	TLV2784AIPW TLV2785AIPW

† This package is available taped and reeled. To order this packaging option, add an **R** suffix to the part number (e.g., TLV2784CDR).

1. For the most current package and ordering information, see the Package Option Addendum at the end of this document, or see the TI website at www.ti.com.

TLV278x PACKAGE PINOUTS

TLV2780
DBV PACKAGE
(TOP VIEW)

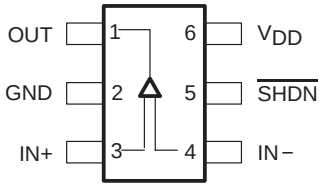

TLV2780
D OR P PACKAGE
(TOP VIEW)

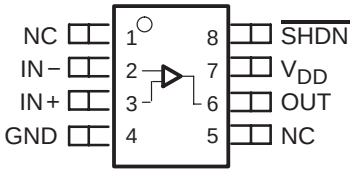

TLV2781
DBV PACKAGE
(TOP VIEW)

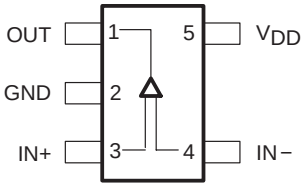

TLV2781
D OR P PACKAGE
(TOP VIEW)

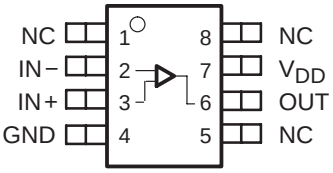

TLV2782
D, DGK, OR P PACKAGE
(TOP VIEW)

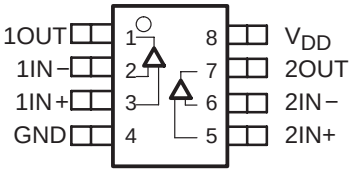

TLV2783
DGS PACKAGE
(TOP VIEW)

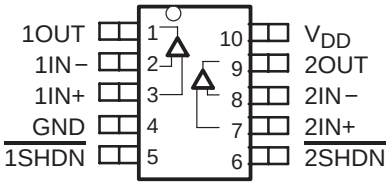

TLV2783
D OR N PACKAGE
(TOP VIEW)

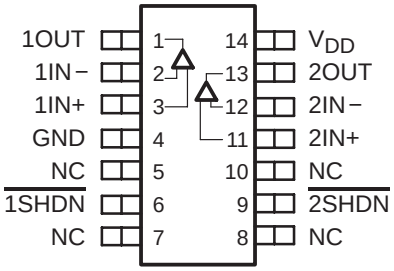

TLV2784
D, N, OR PW PACKAGE
(TOP VIEW)

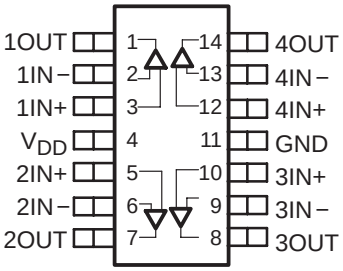

TLV2785
D, N, OR PW PACKAGE
(TOP VIEW)

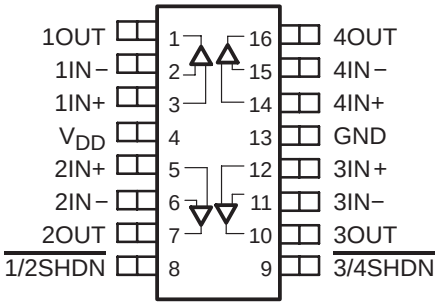

NC − No internal connection

absolute maximum ratings over operating free-air temperature range (unless otherwise noted)†

Supply voltage, V_{DD} (see Note 1) . . . . . 4 V
Differential input voltage, V_{ID} . . . . . $\pm V_{DD}$
Input current, I_I (any input) . . . . . ± 10 mA
Output current, I_O . . . . . ± 10 mA
Continuous total power dissipation . . . . . See Dissipation Rating Table
Operating free-air temperature range, T_A: C-suffix . . . . . 0°C to 70°C
I-suffix . . . . . −40°C to 125°C
Maximum junction temperature, T_J . . . . . 150°C
Storage temperature range, T_{stg} . . . . . −65°C to 150°C
Lead temperature 1,6 mm (1/16 inch) from case for 10 seconds . . . . . 260°C

† Stresses beyond those listed under “absolute maximum ratings” may cause permanent damage to the device. These are stress ratings only, and functional operation of the device at these or any other conditions beyond those indicated under “recommended operating conditions” is not implied. Exposure to absolute-maximum-rated conditions for extended periods may affect device reliability.
NOTE 1: All voltage values, except differential voltages, are with respect to GND.

DISSIPATION RATING TABLE

PACKAGE	Θ_{JC} (°C/W)	Θ_{JA} (°C/W)	$T_A \le 25°C$ POWER RATING	$T_A = 125°C$ POWER RATING
D (8)	38.3	176	710 mW	142 mW
D (14)	26.9	122.3	1022 mW	204.4 mW
D (16)	25.7	114.7	1090 mW	218 mW
DBV (5)	55	324.1	385 mW	77.1 mW
DBV (6)	55	294.3	425 mW	85 mW
DGK (8)	54.2	259.9	481 mW	96.2 mW
DGS (10)	54.1	257.7	485 mW	97 mW
N (14, 16)	32	78	1600 mW	320.5 mW
P (8)	41	104	1200 mW	240.4 mW
PW (14)	29.3	173.6	720 mW	144 mW
PW (16)	28.7	161.4	774 mW	154.9 mW

recommended operating conditions

			MIN	MAX	UNIT
Supply voltage, V_{DD}	Single supply		1.8	3.6	V
	Split supply		±0.9	±1.8	
Common-mode input voltage range, V_{ICR}			−0.2	V_{DD}+0.2	V
Operating free-air temperature, T_A	C-suffix		0	70	°C
	I-suffix		−40	125	
Shutdown on/off voltage level‡	V_{IH}	V_{DD} < 2.7 V	0.75V_{DD}		V
		V_{DD} = 2.7 to 3.6 V	2		
	V_{IL}			0.6	

‡ Relative to GND.

electrical characteristics at specified free-air temperature, V_{DD} = 1.8 V, 2.7 V (unless otherwise noted)

dc performance

PARAMETER		TEST CONDITIONS		T_A†	MIN	TYP	MAX	UNIT
V_{IO}	Input offset voltage	$V_O = V_{DD}/2$, R_L = 2 kΩ, R_S = 50 Ω	TLV278x	25°C		250	3000	µV
				Full range			4500	
			TLV278xA	25°C		250	2000	
				Full range			3000	
α_{VIO}	Temperature coefficient of input offset voltage					8		µV/°C
CMRR	Common-mode rejection ratio	V_{IC} = 0 to V_{DD}, R_S = 50 Ω	V_{DD} = 1.8 V	25°C	50	76		dB
				Full range	50			
			V_{DD} = 2.7 V/ 3.6 V	25°C	55	80		
				Full range	50			
		V_{IC} = 1.2 V to V_{DD}, R_S = 50 Ω	V_{DD} = 2.7 V/ 3.6 V	25°C	70	100		
				Full range	70			
A_{VD}	Large-signal differential voltage amplification	R_L = 2 kΩ, $V_{O(PP)}$ = 1 V	V_{DD} = 1.8 V	25°C	200	600		V/mV
				Full range	50			
			V_{DD} = 2.7 V/ 3.6 V	25°C	200	1000		
				Full range	70			

† Full range is 0°C to 70°C for the C-suffix and −40°C to 125°C for the I-suffix. If not specified, full range is −40°C to 125°C.

input characteristics

PARAMETER		TEST CONDITIONS		T_A†	MIN	TYP	MAX	UNIT
I_{IO}	Input offset current	$V_O = V_{DD}/2$, R_L = 2 kΩ, R_S = 50 Ω		25°C		2.5	15	pA
			TLV278xC	Full range			100	
			TLV278xI	Full range			300	
I_{IB}	Input bias current			25°C		2.5	15	pA
			TLV278xC	Full range			100	
			TLV278xI	Full range			300	
$r_{i(d)}$	Differential input resistance			25°C		1000		GΩ
$C_{i(c)}$	Common-mode input capacitance	f = 1 kHz		25°C		19		pF

† Full range is 0°C to 70°C for the C-suffix and −40°C to 125°C for the I-suffix. If not specified, full range is −40°C to 125°C.

electrical characteristics at specified free-air temperature, V_{DD} = 1.8 V, 2.7 V (unless otherwise noted) (continued)

output characteristics

PARAMETER		TEST CONDITIONS		T_A†	MIN	TYP	MAX	UNIT
V_{OH}	High-level output voltage	I_{OH} = −1 mA	V_{DD} = 1.8 V	25°C	1.7	1.77		V
				Full range	1.63			
			V_{DD} = 2.7 V	25°C	2.6	2.68		
				Full range	2.6			
			V_{DD} = 3.6 V	25°C		3.58		
		I_{OH} = −5 mA	V_{DD} = 1.8 V	25°C	1.5	1.55		
				Full range	1.46			
			V_{DD} = 2.7 V	25°C	2.5	2.55		
				Full range	2.45			
			V_{DD} = 3.6 V	25°C		3.55		
V_{OL}	Low-level output voltage	I_{OL} = 1 mA		25°C			70	mV
				Full range			80	
		I_{OL} = 5 mA	V_{DD} = 1.8 V	25°C		180	240	
				Full range			290	
			V_{DD} = 2.7 V	25°C		120	170	
				Full range			200	
I_O	Output current	V_{DD} = 1.8 V, VO = 0.5 V from	Positive rail	25°C		10		mA
			Negative rail			15		
		V_{DD} = 2.7 V, VO = 0.5 V from	Positive rail			17		
			Negative rail			23		
I_{OS}	Short-circuit output current	Sourcing	V_{DD} = 1.8 V	25°C		13		mA
			V_{DD} = 2.7 V			35		
		Sinking	V_{DD} = 1.8 V			21		
			V_{DD} = 2.7 V			45		

† Full range is 0°C to 70°C for the C-suffix and −40°C to 125°C for the I-suffix. If not specified, full range is −40°C to 125°C.

power supply

PARAMETER		TEST CONDITIONS		T_A†	MIN	TYP	MAX	UNIT
I_{DD}	Supply current (per channel)	$V_O = V_{DD}/2$,	$\overline{SHDN} = V_{DD}$	25°C		650	770	µA
				Full range			820	
k_{SVR}	Supply voltage rejection ratio (ΔV_{DD} /ΔV_{IO})	V_{DD} = 1.8 V to 2.7 V, $V_{IC} = V_{DD}/2$	No load,	25°C	60	75		dB
				Full range	58			
		V_{DD} = 2.7 V to 3.6 V, $V_{IC} = V_{DD}/2$	No load,	25°C	75	90		
				Full range	70			
		V_{DD} = 1.8 V to 3.6 V, $V_{IC} = V_{DD}/2$	No load,	25°C	65	80		
				Full range	60			

† Full range is 0°C to 70°C for the C-suffix and −40°C to 125°C for the I-suffix. If not specified, full range is −40°C to 125°C.

electrical characteristics at specified free-air temperature, V_{DD} = 1.8 V, 2.7 V (unless otherwise noted) (continued)

dynamic performance

PARAMETER		TEST CONDITIONS		T_A†	MIN	TYP	MAX	UNIT
UGBW	Unity gain bandwidth	R_L = 2 kΩ,	C_L = 25 pF	25°C		8		MHz
SR+	Positive slew rate at unity gain	$V_{O(PP)}$ = 1 V, R_L = 2 kΩ, C_L = 50 pF	V_{DD} = 1.8 V	25°C	3.3	4.3		V/µs
				Full range	3.1			
			V_{DD} = 2.7 V	25°C	3.8	4.8		
				Full range	3.5			
			V_{DD} = 3.6 V	25°C	4	5		
				Full range	3.6			
SR−	Negative slew rate at unity gain	$V_{O(PP)}$ = 1 V, R_L = 2 kΩ, C_L = 50 pF	V_{DD} = 1.8 V	25°C	2.1	2.8		
				Full range	1.89			
			V_{DD} = 2.7 V	25°C	2.2	2.8		
				Full range	1.97			
			V_{DD} = 3.6 V	25°C	3.5	4.2		
				Full range	3.4			
ϕ_m	Phase margin	R_L = 2 kΩ,	C_L = 25 pF	25°C		58°		
	Gain margin					8		dB
t_s	Settling time	V_{DD} = 1.8 V, $V_{(STEP)PP}$ = 1 V, A_V = −1, C_L = 10 pF, R_L = 2 kΩ	0.1%	25°C		1.7		µs
			0.01%			2.8		
		V_{DD} = 2.7 V, $V_{(STEP)PP}$ = 1 V, A_V = −1, C_L = 10 pF, R_L = 2 kΩ	0.1%			1.7		
			0.01%			2.4		

† Full range is 0°C to 70°C for the C-suffix and −40°C to 125°C for the I-suffix. If not specified, full range is −40°C to 125°C.

noise/distortion performance

PARAMETER		TEST CONDITIONS		T_A	MIN	TYP	MAX	UNIT
THD + N	Total harmonic distortion plus noise	$V_{O(PP)}$ = V_{DD}/2, R_L = 2 kΩ, f = 10 kHz	A_V = 1	25°C		0.055%		
			A_V = 10			0.08%		
			A_V = 100			0.45%		
V_n	Equivalent input noise voltage	f = 1 kHz				18		nV/√Hz
		f = 10 kHz				9		
I_n	Equivalent input noise current	f = 1 kHz				0.9		fA/√Hz

shutdown characteristics

PARAMETER		TEST CONDITIONS	T_A†	MIN	TYP	MAX	UNIT
$I_{DD(SHDN)}$	Supply current, per channel in shutdown mode (TLV2780, TLV2783, TLV2785)	$\overline{SHDN}$ = 0 V	25°C		900	1400	nA
			Full range			1700	
$t_{(on)}$	Amplifier turnon time‡	R_L = 2 kΩ	25°C		800		ns
$t_{(off)}$	Amplifier turnoff time‡	R_L = 2 kΩ			200		

† Full range is 0°C to 70°C for the C-suffix and −40°C to 125°C for the I-suffix. If not specified, full range is −40°C to 125°C.
‡ Disable time and enable time are defined as the interval between application of the logic signal to $\overline{SHDN}$ and the point at which the supply current has reached half its final value.

TYPICAL CHARACTERISTICS

Table of Graphs

			FIGURE
V_{IO}	Input offset voltage	vs Common-mode input voltage	1, 2
CMRR	Common-mode rejection ratio	vs Frequency	3
V_{OH}	High-level output voltage	vs High-level output current	4, 6
V_{OL}	Low-level output voltage	vs Low-level output current	5, 7
$V_{O(PP)}$	Maximum peak-to-peak output voltage	vs Frequency	8
Z_o	Output impedance	vs Frequency	9
I_{DD}	Supply current	vs Supply voltage	10
I_{DD}	Supply current	vs Free-air temperature	11
PSRR	Power supply rejection ratio	vs Frequency	12
A_{VD}	Differential voltage amplification & phase	vs Frequency	13
	Gain-bandwidth product	vs Free-air temperature	14
SR	Slew rate	vs Supply voltage	15
		vs Free-air temperature	16, 17
ϕ_m	Phase margin	vs Load capacitance	18
V_n	Equivalent input noise voltage	vs Frequency	19
	Voltage-follower large-signal pulse response	vs Time	20
	Voltage-follower small-signal pulse response	vs Time	21
	Inverting large-signal pulse response	vs Time	22
	Inverting small-signal pulse response	vs Time	23
	Crosstalk	vs Frequency	24
	Shutdown forward & reverse isolation	vs Frequency	25
$I_{DD(SHDN)}$	Shutdown supply current	vs Free-air temperature	26
$I_{DD(SHDN)}$	Shutdown supply current	vs Supply voltage	27
$I_{DD(SHDN)}$	Shutdown supply current/output voltage	vs Time	28

TYPICAL CHARACTERISTICS

INPUT OFFSET VOLTAGE vs COMMON-MODE INPUT VOLTAGE

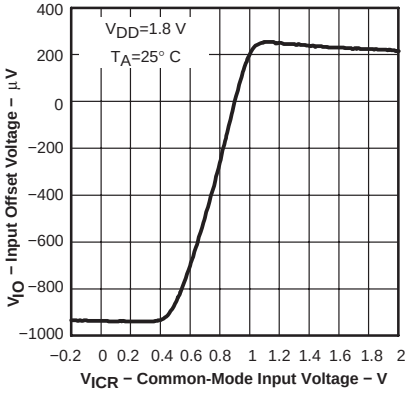

Figure 1

INPUT OFFSET VOLTAGE vs COMMON-MODE INPUT VOLTAGE

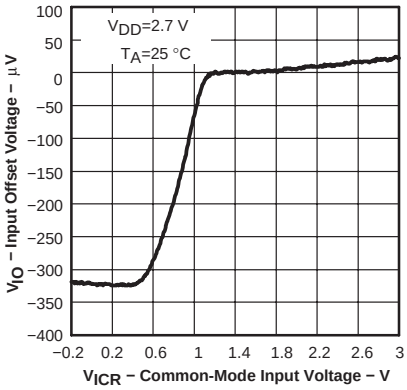

Figure 2

COMMON-MODE REJECTION RATIO vs FREQUENCY

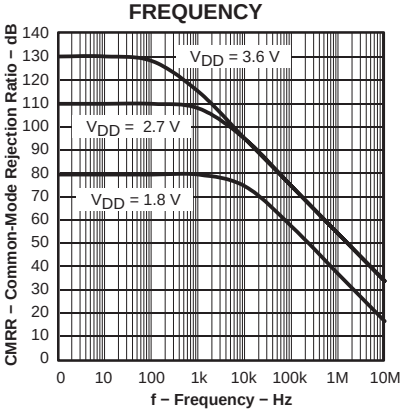

Figure 3

HIGH-LEVEL OUTPUT VOLTAGE vs HIGH-LEVEL OUTPUT CURRENT

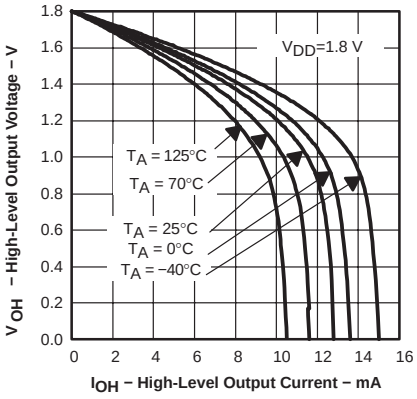

Figure 4

LOW-LEVEL OUTPUT VOLTAGE vs LOW-LEVEL OUTPUT CURRENT

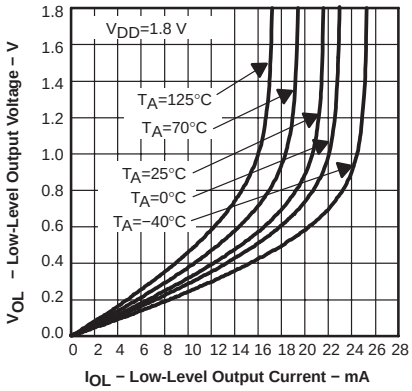

Figure 5

HIGH-LEVEL OUTPUT VOLTAGE vs HIGH-LEVEL OUTPUT CURRENT

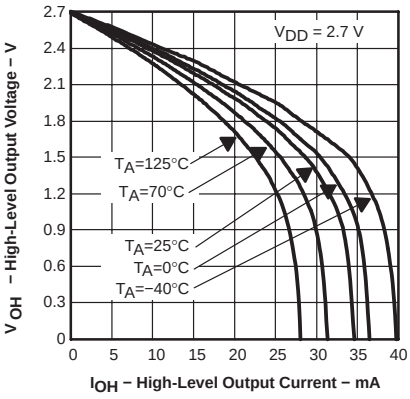

Figure 6

LOW-LEVEL OUTPUT VOLTAGE vs LOW-LEVEL OUTPUT CURRENT

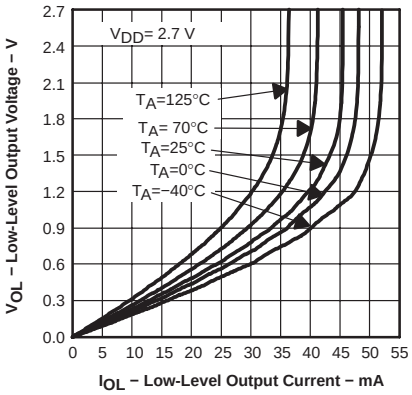

Figure 7

MAXIMUM PEAK-TO-PEAK OUTPUT VOLTAGE vs FREQUENCY

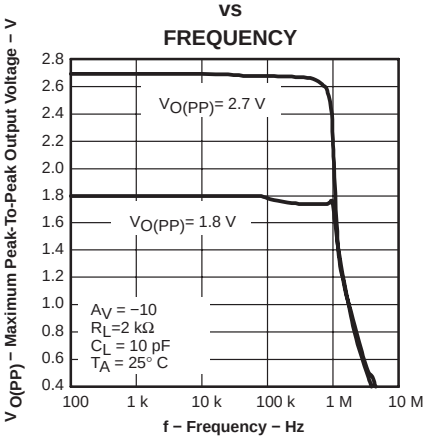

Figure 8

OUTPUT IMPEDANCE vs FREQUENCY

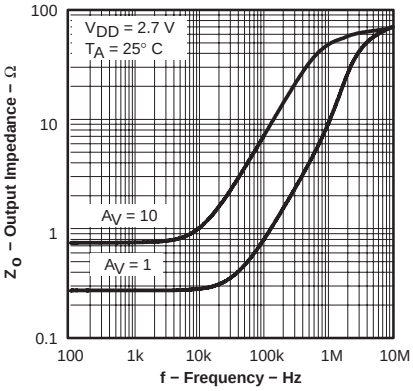

Figure 9

TYPICAL CHARACTERISTICS

SUPPLY CURRENT vs SUPPLY VOLTAGE

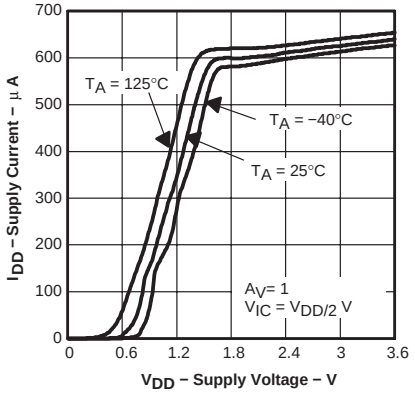

Figure 10

SUPPLY CURRENT vs FREE-AIR TEMPERATURE

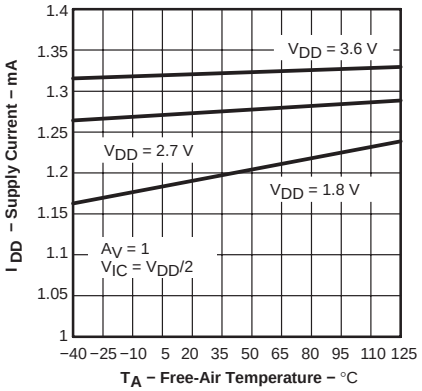

Figure 11

POWER SUPPLY REJECTION RATIO vs FREQUENCY

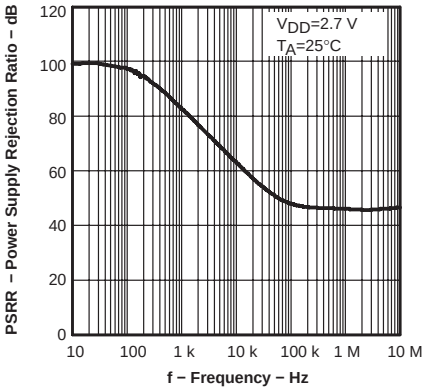

Figure 12

DIFFERENTIAL VOLTAGE AMPLIFICATION AND PHASE vs FREQUENCY

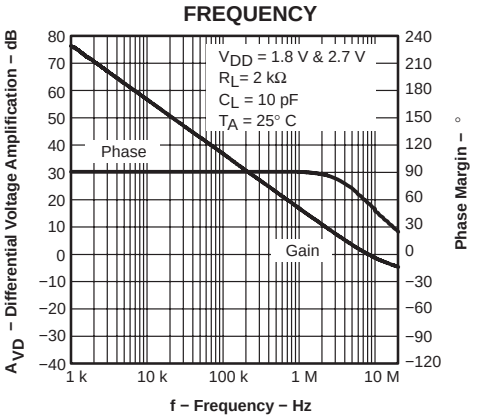

Figure 13

GAIN-BANDWIDTH PRODUCT vs FREE-AIR TEMPERATURE

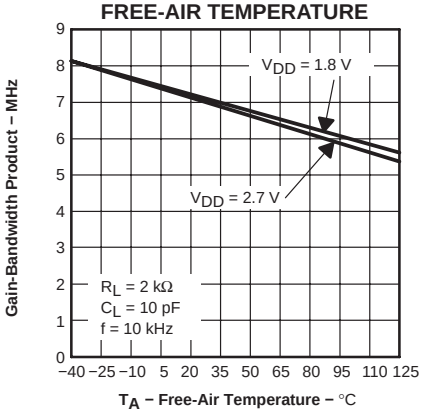

Figure 14

SLEW RATE vs SUPPLY VOLTAGE

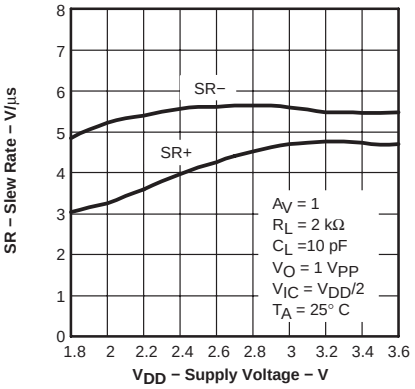

Figure 15

SLEW RATE vs FREE-AIR TEMPERATURE

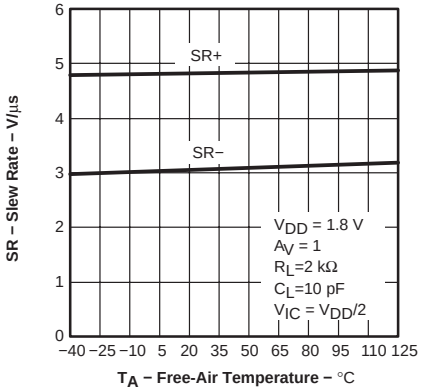

Figure 16

SLEW RATE vs FREE-AIR TEMPERATURE

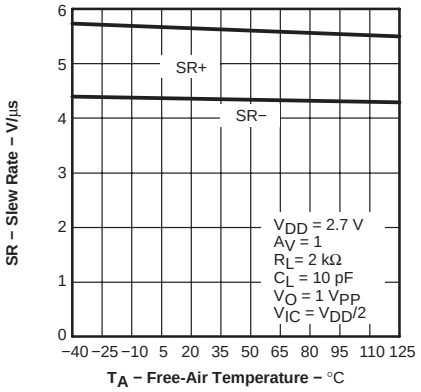

Figure 17

TYPICAL CHARACTERISTICS

PHASE MARGIN vs LOAD CAPACITANCE

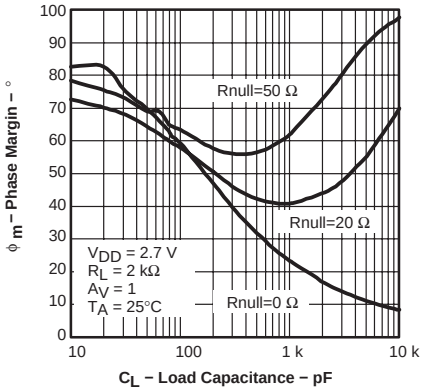

Figure 18

EQUIVALENT INPUT NOISE VOLTAGE vs FREQUENCY

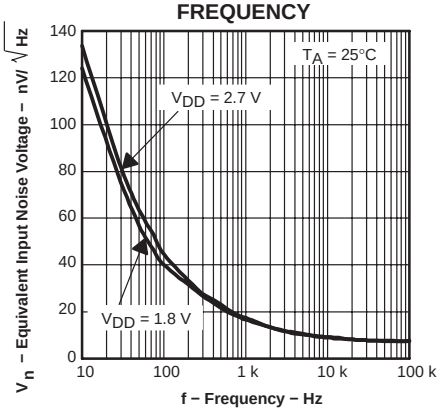

Figure 19

VOLTAGE-FOLLOWER LARGE-SIGNAL PULSE RESPONSE vs TIME

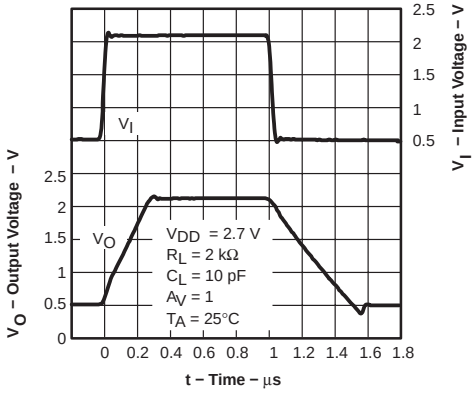

Figure 20

VOLTAGE-FOLLOWER SMALL-SIGNAL PULSE RESPONSE vs TIME

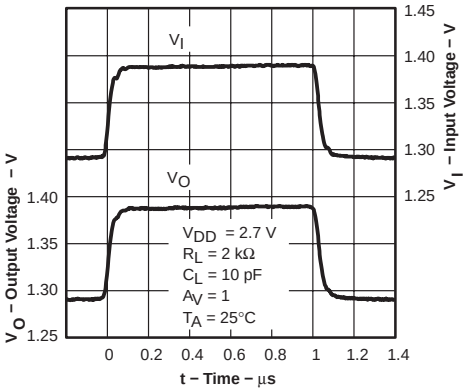

Figure 21

INVERTING LARGE-SIGNAL PULSE RESPONSE vs TIME

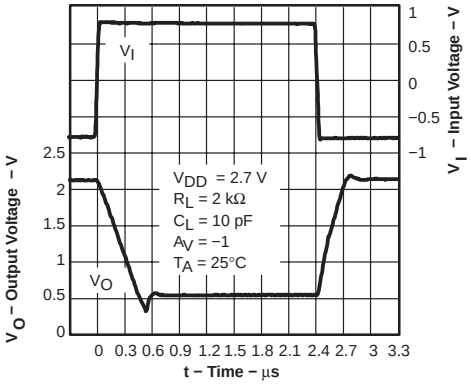

Figure 22

INVERTING SMALL-SIGNAL PULSE RESPONSE vs TIME

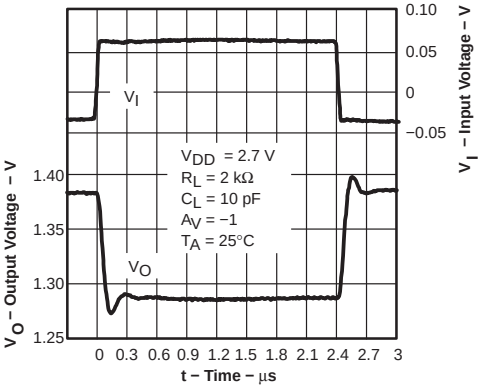

Figure 23

TYPICAL CHARACTERISTICS

CROSSTALK vs FREQUENCY

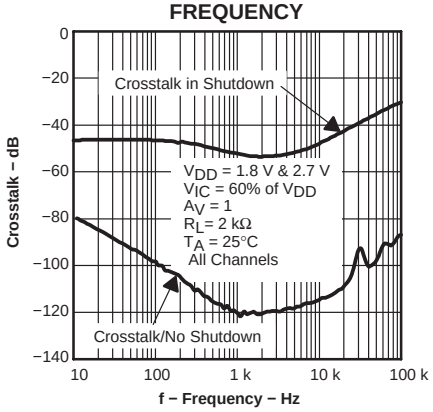

Figure 24

SHUTDOWN FORWARD AND REVERSE ISOLATION vs FREQUENCY

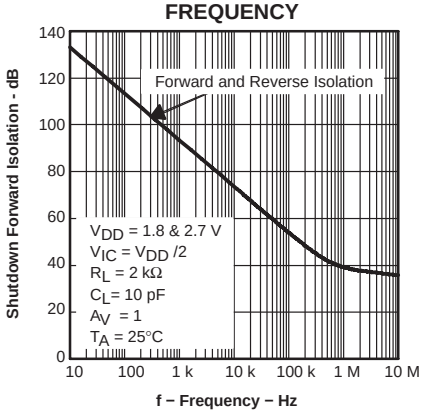

Figure 25

SHUTDOWN SUPPLY CURRENT vs FREE-AIR TEMPERATURE

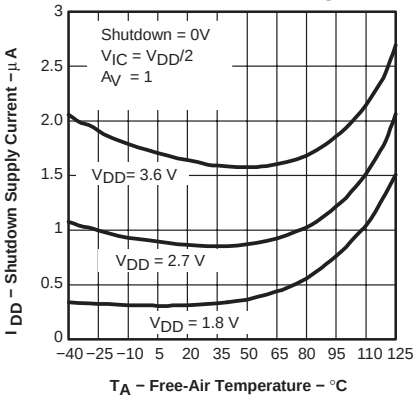

Figure 26

SHUTDOWN SUPPLY CURRENT vs SUPPLY VOLTAGE

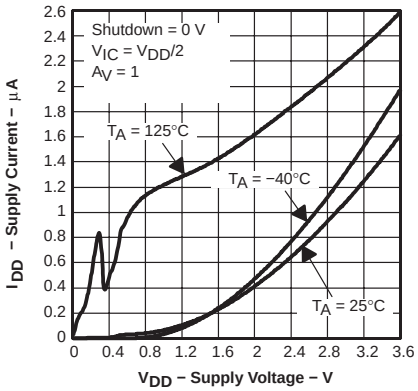

Figure 27

SHUTDOWN SUPPLY CURRENT / OUTPUT VOLTAGE vs TIME

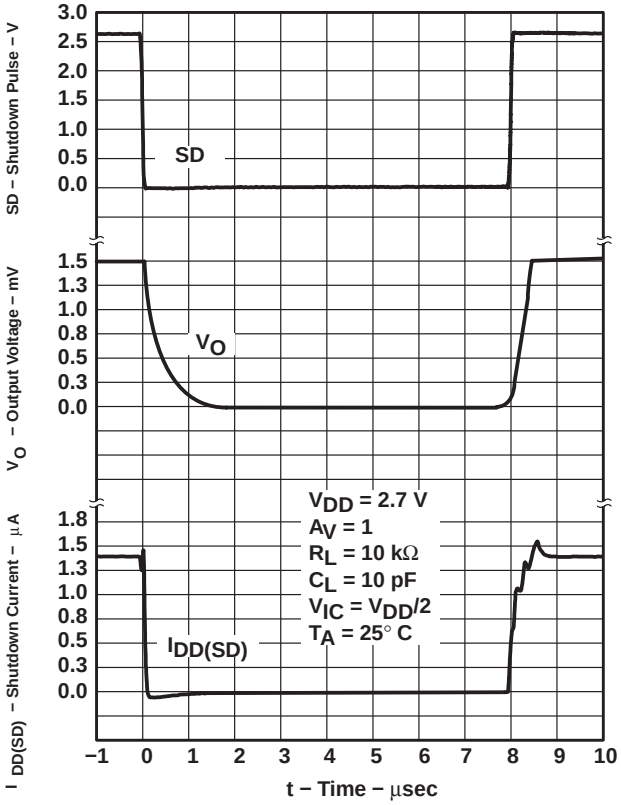

Figure 28

PARAMETER MEASUREMENT INFORMATION

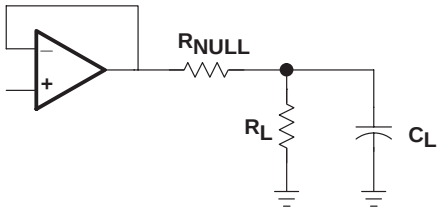

Figure 29

APPLICATION INFORMATION

driving a capacitive load

When the amplifier is configured in this manner, capacitive loading directly on the output will decrease the device's phase margin leading to high frequency ringing or oscillations. Therefore, for capacitive loads of greater than 10 pF, it is recommended that a resistor be placed in series (R_{NULL}) with the output of the amplifier, as shown in Figure 30.

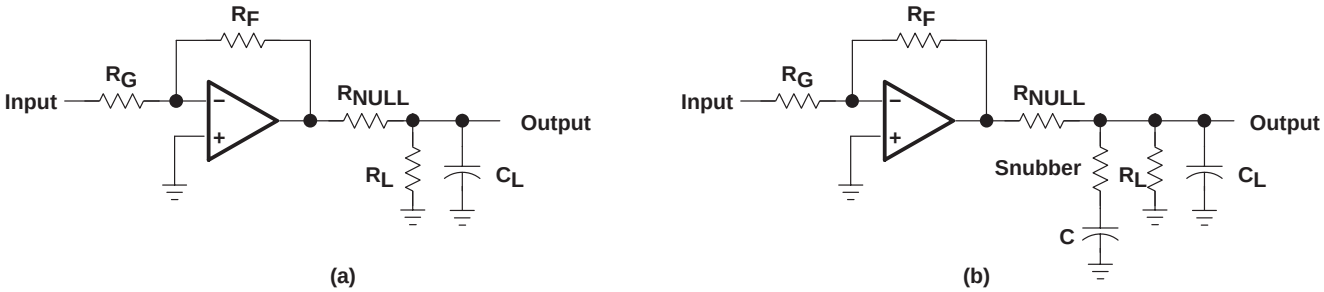

Figure 30. Driving a Capacitive Load

offset voltage

The output offset voltage, (V_{OO}) is the sum of the input offset voltage (V_{IO}) and both input bias currents (I_{IB}) times the corresponding gains. The following schematic and formula can be used to calculate the output offset voltage:

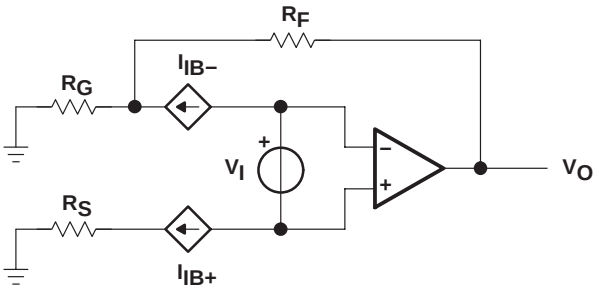

$$V_{OO} = V_{IO}\left(1 + \left(\frac{R_F}{R_G}\right)\right) \pm I_{IB+} R_S \left(1 + \left(\frac{R_F}{R_G}\right)\right) \pm I_{IB-} R_F$$

Figure 31. Output Offset Voltage Model

APPLICATION INFORMATION

general configurations

When receiving low-level signals, limiting the bandwidth of the incoming signals into the system is often required. The simplest way to accomplish this is to place an RC filter at the noninverting terminal of the amplifier (see Figure 32).

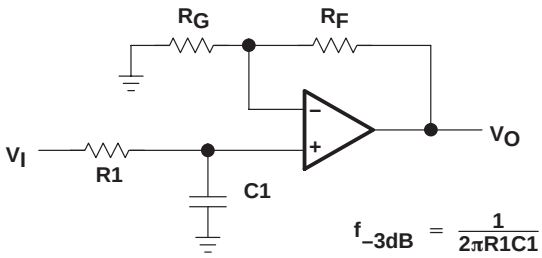

$$f_{-3dB} = \frac{1}{2\pi R1C1}$$

$$\frac{V_O}{V_I} = \left(1 + \frac{R_F}{R_G}\right)\left(\frac{1}{1 + 2\pi fR1C1}\right)$$

Figure 32. Single-Pole Low-Pass Filter

If even more attenuation is needed, a multiple pole filter is required. The Sallen-Key filter can be used for this task. For best results, the amplifier should have a bandwidth that is 8 to 10 times the filter frequency bandwidth. Failure to do this can result in phase shift of the amplifier.

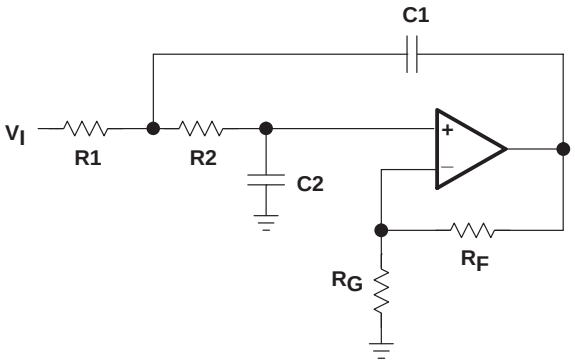

R1 = R2 = R
C1 = C2 = C
Q = Peaking Factor
(Butterworth Q = 0.707)

$$f_{-3dB} = \frac{1}{2\pi RC}$$

$$R_G = \frac{R_F}{\left(2 - \frac{1}{Q}\right)}$$

Figure 33. 2-Pole Low-Pass Sallen-Key Filter

APPLICATION INFORMATION

circuit layout considerations

To achieve the levels of high performance of the TLV278x, follow proper printed-circuit board design techniques. A general set of guidelines is given in the following.

- Ground planes − It is highly recommended that a ground plane be used on the board to provide all components with a low inductive ground connection. However, in the areas of the amplifier inputs and output, the ground plane can be removed to minimize the stray capacitance.
- Proper power supply decoupling − Use a 6.8-µF tantalum capacitor in parallel with a 0.1-µF ceramic capacitor on each supply terminal. It may be possible to share the tantalum among several amplifiers depending on the application, but a 0.1-µF ceramic capacitor should always be used on the supply terminal of every amplifier. In addition, the 0.1-µF capacitor should be placed as close as possible to the supply terminal. As this distance increases, the inductance in the connecting trace makes the capacitor less effective. The designer should strive for distances of less than 0.1 inches between the device power terminals and the ceramic capacitors.
- Sockets − Sockets can be used but are not recommended. The additional lead inductance in the socket pins will often lead to stability problems. Surface-mount packages soldered directly to the printed-circuit board is the best implementation.
- Short trace runs/compact part placements − Optimum high performance is achieved when stray series inductance has been minimized. To realize this, the circuit layout should be made as compact as possible, thereby minimizing the length of all trace runs. Particular attention should be paid to the inverting input of the amplifier. Its length should be kept as short as possible. This will help to minimize stray capacitance at the input of the amplifier.
- Surface-mount passive components − Using surface-mount passive components is recommended for high performance amplifier circuits for several reasons. First, because of the extremely low lead inductance of surface-mount components, the problem with stray series inductance is greatly reduced. Second, the small size of surface-mount components naturally leads to a more compact layout, thereby minimizing both stray inductance and capacitance. If leaded components are used, it is recommended that the lead lengths be kept as short as possible.

shutdown function

Three members of the TLV278x family (TLV2780/3/5) have a shutdown terminal for conserving battery life in portable applications. When the shutdown terminal is tied low, the supply current is reduced to 900 nA/channel, the amplifier is disabled, and the outputs are placed in a high impedance mode. To enable the amplifier, the shutdown terminal can either be left floating or pulled high. When the shutdown terminal is left floating, care should be taken to ensure that parasitic leakage current at the shutdown terminal does not inadvertently place the operational amplifier into shutdown.

APPLICATION INFORMATION

general power dissipation considerations

For a given θ_{JA}, the maximum power dissipation is shown in Figure 34 and is calculated by the following formula:

$$P_D = \left(\frac{T_{MAX} - T_A}{\theta_{JA}}\right)$$

Where:

P_D = Maximum power dissipation of TLV278x IC (watts)
T_{MAX} = Absolute maximum junction temperature (150°C)
T_A = Free-ambient air temperature (°C)
θ_{JA} = $\theta_{JC} + \theta_{CA}$
θ_{JC} = Thermal coefficient from junction to case
θ_{CA} = Thermal coefficient from case to ambient air (°C/W)

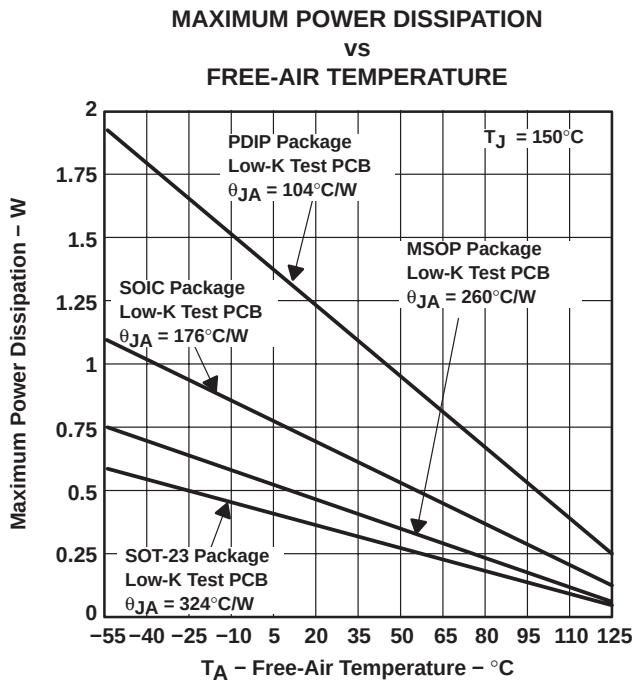

NOTE A: Results are with no air flow and using JEDEC Standard Low-K test PCB.

Figure 34. Maximum Power Dissipation vs Free-Air Temperature

APPLICATION INFORMATION

macromodel information

Macromodel information provided was derived using Microsim *Parts*™ Release 9.1, the model generation software used with Microsim *PSpice*™. The Boyle macromodel (see Note 2) and subcircuit in Figure 35 are generated using TLV278x typical electrical and operating characteristics at T_A = 25°C. Using this information, output simulations of the following key parameters can be generated to a tolerance of 20% (in most cases):

- Maximum positive output voltage swing
- Maximum negative output voltage swing
- Slew rate
- Quiescent power dissipation
- Input bias current
- Open-loop voltage amplification
- Unity-gain frequency
- Common-mode rejection ratio
- Phase margin
- DC output resistance
- AC output resistance
- Short-circuit output current limit

NOTE 2: G. R. Boyle, B. M. Cohn, D. O. Pederson, and J. E. Solomon, “Macromodeling of Integrated Circuit Operational Amplifiers,” *IEEE Journal of Solid-State Circuits,* SC-9, 353 (1974).

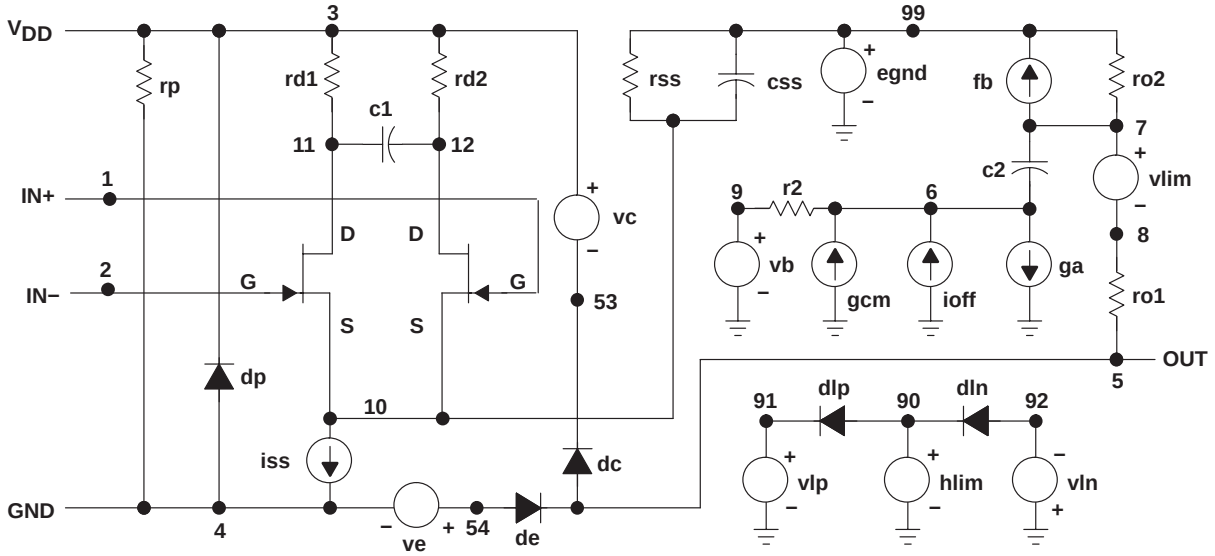


```
* TLV2782_HVDD operational amplifier ”macromodel” subcircuit
* created using Model Editor release 9.1 on 03/3/00 at 9:47
* Model Editor is an OrCAD product.
*
* connections:   non−inverting input
*                  | inverting input
*                  | | positive power supply
*                  | | | negative power supply
*                  | | | | output
*                  | | | | |
.subckt TLV2782_HVDD  1 2 3 4 5
*
c1      11   12   49.58E−15
c2      6    7    10.200E−12
css     10   99   1.0000E−30
dc      5    53   dy
de      54   5    dy
dlp     90   91   dx
dln     92   90   dx
dp      4    3    dx
egnd    99   0    poly(2) (3,0) (4,0) 0 .5 .5
fb      7    99   poly(5) vb vc ve vlp vln 0
                  41.096E6 −1E3 1E3 41E6
                  −41E6
ga      6    0    11 12  544.75E−6
gcm     0    6    10 99 1.1538E−9
iss     10   4    dc 56.957E−6
hlim    90   0    vlim 1K
j1      11   2    10 jx1
J2      12   1    10 jx2
r2      6    9    100.00E3
rd1     3    11   1.8357E3
rd2     3    12   1.8357E3
ro1     8    5    10
ro2     7    99   10
rp      3    4    2.1845E3
rss     10   99   3.5114E6
vb      9    0    dc 0
vc      3    53   dc .81911
ve      54   4    dc .81911
vlim    7    8    dc 0
vlp     91   0    dc 45.400
vln     0    92   dc 45.400
.model  dx   D(Is=800.00E−18)
.model  dy   D(Is=800.00E−18 Rs=1m Cjo=10p)
.model  jx1  NJF(Is=500.00E−15 Beta=5.2102E−3 Vto=−1)
.model  jx2  NJF(Is=500.00E−15 Beta=5.2102E−3 Vto=−1)
.ends
```

Figure 35. Boyle Macromodel and Subcircuit

PSpice and *Parts* are trademarks of MicroSim Corporation.

PACKAGING INFORMATION

Orderable part number	Status (1)	Material type (2)	Package | Pins	Package qty | Carrier	RoHS (3)	Lead finish/ Ball material (4)	MSL rating/ Peak reflow (5)	Op temp (°C)	Part marking (6)
TLV2780CDBVR	Active	Production	SOT-23 (DBV) | 6	3000 | LARGE T&R	Yes	NIPDAU	Level-1-260C-UNLIM	0 to 70	VASC
TLV2780CDBVR.A	Active	Production	SOT-23 (DBV) | 6	3000 | LARGE T&R	Yes	NIPDAU	Level-1-260C-UNLIM	0 to 70	VASC
TLV2780CDBVT	Obsolete	Production	SOT-23 (DBV) | 6	-	-	Call TI	Call TI	0 to 70	VASC
TLV2780IDBVR	Active	Production	SOT-23 (DBV) | 6	3000 | LARGE T&R	Yes	NIPDAU	Level-1-260C-UNLIM	-40 to 125	VASI
TLV2780IDBVR.A	Active	Production	SOT-23 (DBV) | 6	3000 | LARGE T&R	Yes	NIPDAU	Level-1-260C-UNLIM	-40 to 125	VASI
TLV2780IDBVT	Active	Production	SOT-23 (DBV) | 6	250 | SMALL T&R	Yes	NIPDAU	Level-1-260C-UNLIM	-40 to 125	VASI
TLV2780IDBVT.A	Active	Production	SOT-23 (DBV) | 6	250 | SMALL T&R	Yes	NIPDAU	Level-1-260C-UNLIM	-40 to 125	VASI
TLV2780IDR	Active	Production	SOIC (D) | 8	2500 | LARGE T&R	Yes	NIPDAU	Level-1-260C-UNLIM	-40 to 125	T2780I
TLV2780IDR.A	Active	Production	SOIC (D) | 8	2500 | LARGE T&R	Yes	NIPDAU	Level-1-260C-UNLIM	-40 to 125	T2780I
TLV2781CDBVR	Active	Production	SOT-23 (DBV) | 5	3000 | LARGE T&R	Yes	SN	Level-1-260C-UNLIM	0 to 70	VATC
TLV2781CDBVR.A	Active	Production	SOT-23 (DBV) | 5	3000 | LARGE T&R	Yes	SN	Level-1-260C-UNLIM	0 to 70	VATC
TLV2781CDBVT	Active	Production	SOT-23 (DBV) | 5	250 | SMALL T&R	Yes	SN	Level-1-260C-UNLIM	0 to 70	VATC
TLV2781CDBVT.A	Active	Production	SOT-23 (DBV) | 5	250 | SMALL T&R	Yes	SN	Level-1-260C-UNLIM	0 to 70	VATC
TLV2781ID	Active	Production	SOIC (D) | 8	75 | TUBE	Yes	NIPDAU	Level-1-260C-UNLIM	-40 to 125	T2781I
TLV2781ID.A	Active	Production	SOIC (D) | 8	75 | TUBE	Yes	NIPDAU	Level-1-260C-UNLIM	-40 to 125	T2781I
TLV2781IDBVR	Active	Production	SOT-23 (DBV) | 5	3000 | LARGE T&R	Yes	SN	Level-1-260C-UNLIM	-40 to 125	VATI
TLV2781IDBVR.A	Active	Production	SOT-23 (DBV) | 5	3000 | LARGE T&R	Yes	SN	Level-1-260C-UNLIM	-40 to 125	VATI
TLV2781IDBVT	Active	Production	SOT-23 (DBV) | 5	250 | SMALL T&R	Yes	SN	Level-1-260C-UNLIM	-40 to 125	VATI
TLV2781IDBVT.A	Active	Production	SOT-23 (DBV) | 5	250 | SMALL T&R	Yes	SN	Level-1-260C-UNLIM	-40 to 125	VATI
TLV2781IDR	Active	Production	SOIC (D) | 8	2500 | LARGE T&R	Yes	NIPDAU	Level-1-260C-UNLIM	-40 to 125	T2781I
TLV2781IDR.A	Active	Production	SOIC (D) | 8	2500 | LARGE T&R	Yes	NIPDAU	Level-1-260C-UNLIM	-40 to 125	T2781I
TLV2782AID	Obsolete	Production	SOIC (D) | 8	-	-	Call TI	Call TI	-40 to 125	2782AI
TLV2782CD	Active	Production	SOIC (D) | 8	75 | TUBE	Yes	NIPDAU	Level-1-260C-UNLIM	0 to 70	2782C
TLV2782CD.A	Active	Production	SOIC (D) | 8	75 | TUBE	Yes	NIPDAU	Level-1-260C-UNLIM	0 to 70	2782C
TLV2782CDG4	Active	Production	SOIC (D) | 8	75 | TUBE	-	Call TI	Call TI	0 to 70	
TLV2782CDGK	Active	Production	VSSOP (DGK) | 8	80 | TUBE	Yes	NIPDAU | NIPDAUAG	Level-1-260C-UNLIM	0 to 70	ADL
TLV2782CDGK.A	Active	Production	VSSOP (DGK) | 8	80 | TUBE	Yes	NIPDAU	Level-1-260C-UNLIM	0 to 70	ADL
TLV2782CDGKR	Active	Production	VSSOP (DGK) | 8	2500 | LARGE T&R	Yes	NIPDAU | NIPDAUAG	Level-1-260C-UNLIM	0 to 70	ADL
TLV2782CDGKR.A	Active	Production	VSSOP (DGK) | 8	2500 | LARGE T&R	Yes	NIPDAU	Level-1-260C-UNLIM	0 to 70	ADL

Orderable part number	Status (1)	Material type (2)	Package | Pins	Package qty | Carrier	RoHS (3)	Lead finish/ Ball material (4)	MSL rating/ Peak reflow (5)	Op temp (°C)	Part marking (6)
TLV2782CDR	Active	Production	SOIC (D) | 8	2500 | LARGE T&R	Yes	NIPDAU	Level-1-260C-UNLIM	0 to 70	2782C
TLV2782CDR.A	Active	Production	SOIC (D) | 8	2500 | LARGE T&R	Yes	NIPDAU	Level-1-260C-UNLIM	0 to 70	2782C
TLV2782ID	Obsolete	Production	SOIC (D) | 8	-	-	Call TI	Call TI	-40 to 125	2782I
TLV2782IDGK	Active	Production	VSSOP (DGK) | 8	80 | TUBE	Yes	NIPDAU | NIPDAUAG	Level-1-260C-UNLIM	-40 to 125	ADM
TLV2782IDGK.A	Active	Production	VSSOP (DGK) | 8	80 | TUBE	Yes	NIPDAU	Level-1-260C-UNLIM	-40 to 125	ADM
TLV2782IDGKR	Active	Production	VSSOP (DGK) | 8	2500 | LARGE T&R	Yes	NIPDAU | NIPDAUAG	Level-1-260C-UNLIM	-40 to 125	ADM
TLV2782IDGKR.A	Active	Production	VSSOP (DGK) | 8	2500 | LARGE T&R	Yes	NIPDAU	Level-1-260C-UNLIM	-40 to 125	ADM
TLV2782IDR	Active	Production	SOIC (D) | 8	2500 | LARGE T&R	Yes	NIPDAU	Level-1-260C-UNLIM	-40 to 125	2782I
TLV2782IDR.A	Active	Production	SOIC (D) | 8	2500 | LARGE T&R	Yes	NIPDAU	Level-1-260C-UNLIM	-40 to 125	2782I
TLV2782IP	Active	Production	PDIP (P) | 8	50 | TUBE	Yes	NIPDAU	N/A for Pkg Type	-40 to 125	TLV2782IP
TLV2782IP.A	Active	Production	PDIP (P) | 8	50 | TUBE	Yes	NIPDAU	N/A for Pkg Type	-40 to 125	TLV2782IP
TLV2783IDGS	Obsolete	Production	VSSOP (DGS) | 10	-	-	Call TI	Call TI	-40 to 125	ADO
TLV2783IDGSR	Active	Production	VSSOP (DGS) | 10	2500 | LARGE T&R	Yes	NIPDAU	Level-1-260C-UNLIM	-40 to 125	ADO
TLV2783IDGSR.A	Active	Production	VSSOP (DGS) | 10	2500 | LARGE T&R	Yes	NIPDAU	Level-1-260C-UNLIM	-40 to 125	ADO
TLV2783IN	Active	Production	PDIP (N) | 14	25 | TUBE	Yes	NIPDAU	N/A for Pkg Type	-40 to 125	TLV2783I
TLV2783IN.A	Active	Production	PDIP (N) | 14	25 | TUBE	Yes	NIPDAU	N/A for Pkg Type	-40 to 125	TLV2783I
TLV2784AID	Active	Production	SOIC (D) | 14	50 | TUBE	Yes	NIPDAU	Level-1-260C-UNLIM	-40 to 125	2784AI
TLV2784AID.A	Active	Production	SOIC (D) | 14	50 | TUBE	Yes	NIPDAU	Level-1-260C-UNLIM	-40 to 125	2784AI
TLV2784AIDR	Active	Production	SOIC (D) | 14	2500 | LARGE T&R	Yes	NIPDAU	Level-1-260C-UNLIM	-40 to 125	2784AI
TLV2784AIDR.A	Active	Production	SOIC (D) | 14	2500 | LARGE T&R	Yes	NIPDAU	Level-1-260C-UNLIM	-40 to 125	2784AI
TLV2784CPWR	Active	Production	TSSOP (PW) | 14	2000 | LARGE T&R	Yes	NIPDAU	Level-1-260C-UNLIM	0 to 70	2784C
TLV2784CPWR.A	Active	Production	TSSOP (PW) | 14	2000 | LARGE T&R	Yes	NIPDAU	Level-1-260C-UNLIM	0 to 70	2784C
TLV2784ID	Obsolete	Production	SOIC (D) | 14	-	-	Call TI	Call TI	-40 to 125	TLV2784I
TLV2784IDR	Active	Production	SOIC (D) | 14	2500 | LARGE T&R	Yes	NIPDAU	Level-1-260C-UNLIM	-40 to 125	TLV2784I
TLV2784IDR.A	Active	Production	SOIC (D) | 14	2500 | LARGE T&R	Yes	NIPDAU	Level-1-260C-UNLIM	-40 to 125	TLV2784I
TLV2784IPW	Active	Production	TSSOP (PW) | 14	90 | TUBE	Yes	NIPDAU	Level-1-260C-UNLIM	-40 to 125	2784I
TLV2784IPW.A	Active	Production	TSSOP (PW) | 14	90 | TUBE	Yes	NIPDAU	Level-1-260C-UNLIM	-40 to 125	2784I
TLV2784IPWR	Active	Production	TSSOP (PW) | 14	2000 | LARGE T&R	Yes	NIPDAU	Level-1-260C-UNLIM	-40 to 125	2784I
TLV2784IPWR.A	Active	Production	TSSOP (PW) | 14	2000 | LARGE T&R	Yes	NIPDAU	Level-1-260C-UNLIM	-40 to 125	2784I
TLV2785AID	Active	Production	SOIC (D) | 16	40 | TUBE	Yes	NIPDAU	Level-1-260C-UNLIM	-40 to 125	2785AI
TLV2785AID.A	Active	Production	SOIC (D) | 16	40 | TUBE	Yes	NIPDAU	Level-1-260C-UNLIM	-40 to 125	2785AI

Orderable part number	Status (1)	Material type (2)	Package | Pins	Package qty | Carrier	RoHS (3)	Lead finish/ Ball material (4)	MSL rating/ Peak reflow (5)	Op temp (°C)	Part marking (6)
TLV2785CPWR	Active	Production	TSSOP (PW) | 16	2000 | LARGE T&R	Yes	NIPDAU	Level-1-260C-UNLIM	0 to 70	2785C
TLV2785CPWR.A	Active	Production	TSSOP (PW) | 16	2000 | LARGE T&R	Yes	NIPDAU	Level-1-260C-UNLIM	0 to 70	2785C
TLV2785IN	Active	Production	PDIP (N) | 16	25 | TUBE	Yes	NIPDAU	N/A for Pkg Type	-40 to 125	TLV2785I
TLV2785IN.A	Active	Production	PDIP (N) | 16	25 | TUBE	Yes	NIPDAU	N/A for Pkg Type	-40 to 125	TLV2785I
TLV2785IPWR	Active	Production	TSSOP (PW) | 16	2000 | LARGE T&R	Yes	NIPDAU	Level-1-260C-UNLIM	-40 to 125	2785I
TLV2785IPWR.A	Active	Production	TSSOP (PW) | 16	2000 | LARGE T&R	Yes	NIPDAU	Level-1-260C-UNLIM	-40 to 125	2785I

(1) **Status:** For more details on status, see our product life cycle.

(2) **Material type:** When designated, preproduction parts are prototypes/experimental devices, and are not yet approved or released for full production. Testing and final process, including without limitation quality assurance, reliability performance testing, and/or process qualification, may not yet be complete, and this item is subject to further changes or possible discontinuation. If available for ordering, purchases will be subject to an additional waiver at checkout, and are intended for early internal evaluation purposes only. These items are sold without warranties of any kind.

(3) **RoHS values:** Yes, No, RoHS Exempt. See the TI RoHS Statement for additional information and value definition.

(4) **Lead finish/Ball material:** Parts may have multiple material finish options. Finish options are separated by a vertical ruled line. Lead finish/Ball material values may wrap to two lines if the finish value exceeds the maximum column width.

(5) **MSL rating/Peak reflow:** The moisture sensitivity level ratings and peak solder (reflow) temperatures. In the event that a part has multiple moisture sensitivity ratings, only the lowest level per JEDEC standards is shown. Refer to the shipping label for the actual reflow temperature that will be used to mount the part to the printed circuit board.

(6) **Part marking:** There may be an additional marking, which relates to the logo, the lot trace code information, or the environmental category of the part.

Multiple part markings will be inside parentheses. Only one part marking contained in parentheses and separated by a "~" will appear on a part. If a line is indented then it is a continuation of the previous line and the two combined represent the entire part marking for that device.

Important Information and Disclaimer: The information provided on this page represents TI's knowledge and belief as of the date that it is provided. TI bases its knowledge and belief on information provided by third parties, and makes no representation or warranty as to the accuracy of such information. Efforts are underway to better integrate information from third parties. TI has taken and continues to take reasonable steps to provide representative and accurate information but may not have conducted destructive testing or chemical analysis on incoming materials and chemicals. TI and TI suppliers consider certain information to be proprietary, and thus CAS numbers and other limited information may not be available for release.

In no event shall TI's liability arising out of such information exceed the total purchase price of the TI part(s) at issue in this document sold by TI to Customer on an annual basis.

TAPE AND REEL INFORMATION

REEL DIMENSIONS

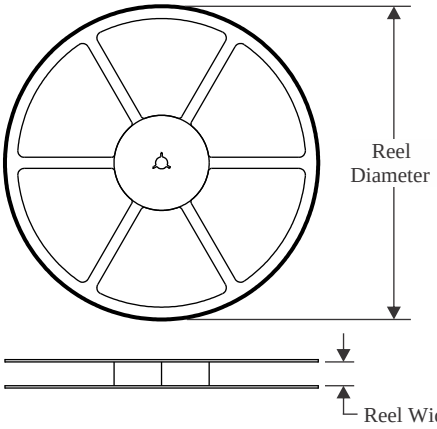

TAPE DIMENSIONS

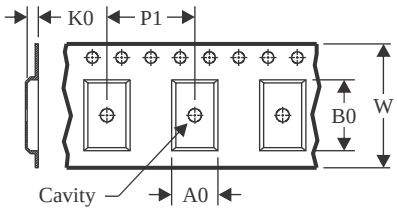

A0	Dimension designed to accommodate the component width
B0	Dimension designed to accommodate the component length
K0	Dimension designed to accommodate the component thickness
W	Overall width of the carrier tape
P1	Pitch between successive cavity centers

QUADRANT ASSIGNMENTS FOR PIN 1 ORIENTATION IN TAPE

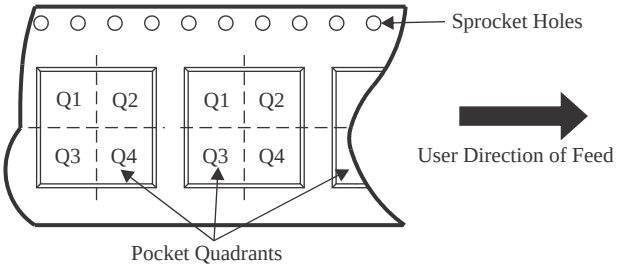

*All dimensions are nominal

Device	Package Type	Package Drawing	Pins	SPQ	Reel Diameter (mm)	Reel Width W1 (mm)	A0 (mm)	B0 (mm)	K0 (mm)	P1 (mm)	W (mm)	Pin1 Quadrant
TLV2780CDBVR	SOT-23	DBV	6	3000	180.0	8.4	3.2	3.2	1.4	4.0	8.0	Q3
TLV2780IDBVR	SOT-23	DBV	6	3000	180.0	8.4	3.2	3.2	1.4	4.0	8.0	Q3
TLV2780IDBVT	SOT-23	DBV	6	250	180.0	8.4	3.2	3.2	1.4	4.0	8.0	Q3
TLV2780IDR	SOIC	D	8	2500	330.0	12.4	6.4	5.2	2.1	8.0	12.0	Q1
TLV2781CDBVR	SOT-23	DBV	5	3000	180.0	8.4	3.2	3.2	1.4	4.0	8.0	Q3
TLV2781CDBVT	SOT-23	DBV	5	250	180.0	8.4	3.2	3.2	1.4	4.0	8.0	Q3
TLV2781IDBVR	SOT-23	DBV	5	3000	180.0	8.4	3.2	3.2	1.4	4.0	8.0	Q3
TLV2781IDBVT	SOT-23	DBV	5	250	180.0	8.4	3.2	3.2	1.4	4.0	8.0	Q3
TLV2781IDR	SOIC	D	8	2500	330.0	12.4	6.4	5.2	2.1	8.0	12.0	Q1
TLV2782CDGKR	VSSOP	DGK	8	2500	330.0	12.4	6.4	5.2	2.1	8.0	12.0	Q1
TLV2782CDGKR	VSSOP	DGK	8	2500	330.0	12.4	5.3	3.4	1.4	8.0	12.0	Q1
TLV2782CDGKR	VSSOP	DGK	8	2500	330.0	12.4	5.3	3.4	1.4	8.0	12.0	Q1
TLV2782CDR	SOIC	D	8	2500	330.0	12.4	6.4	5.2	2.1	8.0	12.0	Q1
TLV2782IDGKR	VSSOP	DGK	8	2500	330.0	12.4	5.3	3.4	1.4	8.0	12.0	Q1
TLV2782IDGKR	VSSOP	DGK	8	2500	330.0	12.4	5.3	3.4	1.4	8.0	12.0	Q1
TLV2782IDGKR	VSSOP	DGK	8	2500	330.0	12.4	6.4	5.2	2.1	8.0	12.0	Q1

Device	Package Type	Package Drawing	Pins	SPQ	Reel Diameter (mm)	Reel Width W1 (mm)	A0 (mm)	B0 (mm)	K0 (mm)	P1 (mm)	W (mm)	Pin1 Quadrant
TLV2782IDR	SOIC	D	8	2500	330.0	12.4	6.4	5.2	2.1	8.0	12.0	Q1
TLV2783IDGSR	VSSOP	DGS	10	2500	330.0	12.4	5.3	3.4	1.4	8.0	12.0	Q1
TLV2784AIDR	SOIC	D	14	2500	330.0	16.4	6.5	9.0	2.1	8.0	16.0	Q1
TLV2784CPWR	TSSOP	PW	14	2000	330.0	12.4	6.9	5.6	1.6	8.0	12.0	Q1
TLV2784CPWR	TSSOP	PW	14	2000	330.0	12.4	6.9	5.6	1.6	8.0	12.0	Q1
TLV2784IDR	SOIC	D	14	2500	330.0	16.4	6.5	9.0	2.1	8.0	16.0	Q1
TLV2784IPWR	TSSOP	PW	14	2000	330.0	12.4	6.9	5.6	1.6	8.0	12.0	Q1
TLV2784IPWR	TSSOP	PW	14	2000	330.0	12.4	6.9	5.6	1.6	8.0	12.0	Q1
TLV2785CPWR	TSSOP	PW	16	2000	330.0	12.4	6.9	5.6	1.6	8.0	12.0	Q1
TLV2785IPWR	TSSOP	PW	16	2000	330.0	12.4	6.9	5.6	1.6	8.0	12.0	Q1

TAPE AND REEL BOX DIMENSIONS

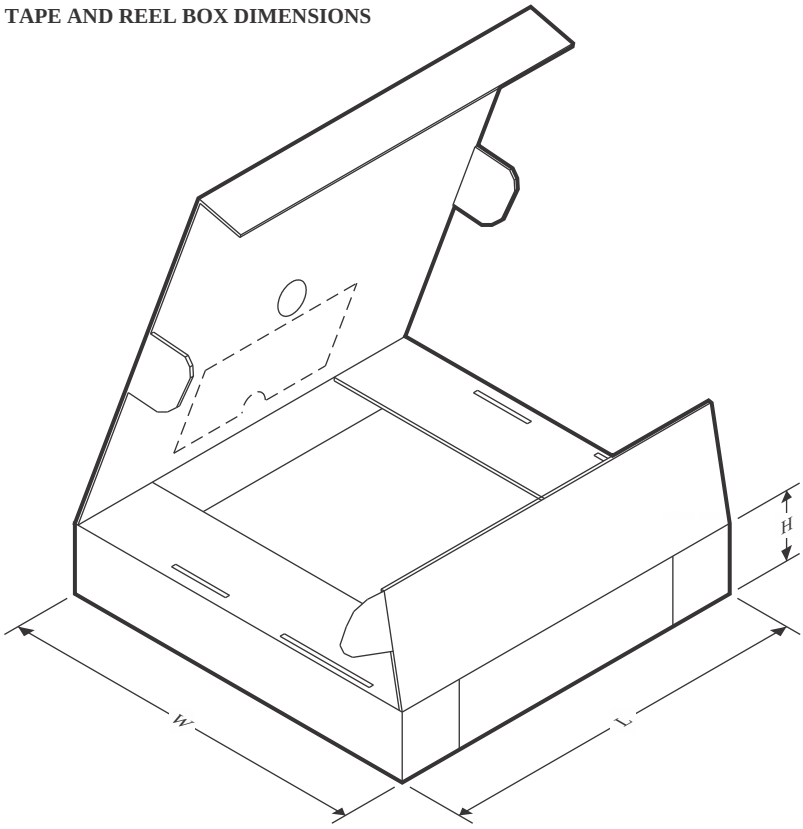

*All dimensions are nominal

Device	Package Type	Package Drawing	Pins	SPQ	Length (mm)	Width (mm)	Height (mm)
TLV2780CDBVR	SOT-23	DBV	6	3000	210.0	185.0	35.0
TLV2780IDBVR	SOT-23	DBV	6	3000	210.0	185.0	35.0
TLV2780IDBVT	SOT-23	DBV	6	250	210.0	185.0	35.0
TLV2780IDR	SOIC	D	8	2500	340.5	338.1	20.6
TLV2781CDBVR	SOT-23	DBV	5	3000	210.0	185.0	35.0
TLV2781CDBVT	SOT-23	DBV	5	250	210.0	185.0	35.0
TLV2781IDBVR	SOT-23	DBV	5	3000	210.0	185.0	35.0
TLV2781IDBVT	SOT-23	DBV	5	250	210.0	185.0	35.0
TLV2781IDR	SOIC	D	8	2500	340.5	338.1	20.6
TLV2782CDGKR	VSSOP	DGK	8	2500	353.0	353.0	32.0
TLV2782CDGKR	VSSOP	DGK	8	2500	364.0	364.0	27.0
TLV2782CDGKR	VSSOP	DGK	8	2500	358.0	335.0	35.0
TLV2782CDR	SOIC	D	8	2500	353.0	353.0	32.0
TLV2782IDGKR	VSSOP	DGK	8	2500	364.0	364.0	27.0
TLV2782IDGKR	VSSOP	DGK	8	2500	358.0	335.0	35.0
TLV2782IDGKR	VSSOP	DGK	8	2500	353.0	353.0	32.0
TLV2782IDR	SOIC	D	8	2500	340.5	338.1	20.6
TLV2783IDGSR	VSSOP	DGS	10	2500	358.0	335.0	35.0

Device	Package Type	Package Drawing	Pins	SPQ	Length (mm)	Width (mm)	Height (mm)
TLV2784AIDR	SOIC	D	14	2500	350.0	350.0	43.0
TLV2784CPWR	TSSOP	PW	14	2000	353.0	353.0	32.0
TLV2784CPWR	TSSOP	PW	14	2000	353.0	353.0	32.0
TLV2784IDR	SOIC	D	14	2500	353.0	353.0	32.0
TLV2784IPWR	TSSOP	PW	14	2000	353.0	353.0	32.0
TLV2784IPWR	TSSOP	PW	14	2000	353.0	353.0	32.0
TLV2785CPWR	TSSOP	PW	16	2000	353.0	353.0	32.0
TLV2785IPWR	TSSOP	PW	16	2000	353.0	353.0	32.0

TUBE

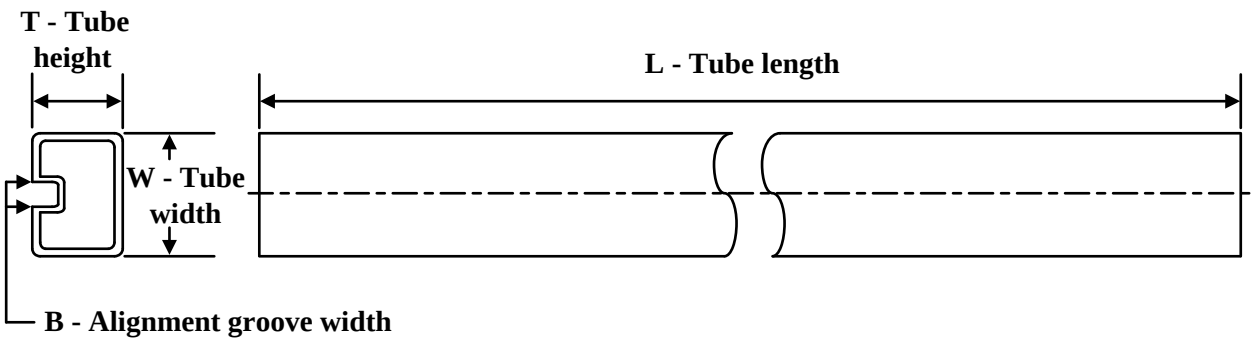

*All dimensions are nominal

Device	Package Name	Package Type	Pins	SPQ	L (mm)	W (mm)	T (µm)	B (mm)
TLV2781ID	D	SOIC	8	75	505.46	6.76	3810	4
TLV2781ID	D	SOIC	8	75	507	8	3940	4.32
TLV2781ID.A	D	SOIC	8	75	507	8	3940	4.32
TLV2781ID.A	D	SOIC	8	75	505.46	6.76	3810	4
TLV2782CD	D	SOIC	8	75	507	8	3940	4.32
TLV2782CD	D	SOIC	8	75	505.46	6.76	3810	4
TLV2782CD.A	D	SOIC	8	75	507	8	3940	4.32
TLV2782CD.A	D	SOIC	8	75	505.46	6.76	3810	4
TLV2782CDGK	DGK	VSSOP	8	80	274	6.2	2540	2.5
TLV2782CDGK	DGK	VSSOP	8	80	330	6.55	500	2.88
TLV2782CDGK.A	DGK	VSSOP	8	80	330	6.55	500	2.88
TLV2782CDGK.A	DGK	VSSOP	8	80	274	6.2	2540	2.5
TLV2782IDGK	DGK	VSSOP	8	80	274	6.2	2540	2.5
TLV2782IDGK	DGK	VSSOP	8	80	330	6.55	500	2.88
TLV2782IDGK.A	DGK	VSSOP	8	80	330	6.55	500	2.88
TLV2782IDGK.A	DGK	VSSOP	8	80	274	6.2	2540	2.5
TLV2782IP	P	PDIP	8	50	506	13.97	11230	4.32
TLV2782IP.A	P	PDIP	8	50	506	13.97	11230	4.32
TLV2783IN	N	PDIP	14	25	506	13.97	11230	4.32
TLV2783IN.A	N	PDIP	14	25	506	13.97	11230	4.32
TLV2784AID	D	SOIC	14	50	505.46	6.76	3810	4
TLV2784AID.A	D	SOIC	14	50	505.46	6.76	3810	4
TLV2784IPW	PW	TSSOP	14	90	530	10.2	3600	3.5
TLV2784IPW.A	PW	TSSOP	14	90	530	10.2	3600	3.5
TLV2785AID	D	SOIC	16	40	505.46	6.76	3810	4
TLV2785AID.A	D	SOIC	16	40	505.46	6.76	3810	4
TLV2785IN	N	PDIP	16	25	506	13.97	11230	4.32
TLV2785IN.A	N	PDIP	16	25	506	13.97	11230	4.32

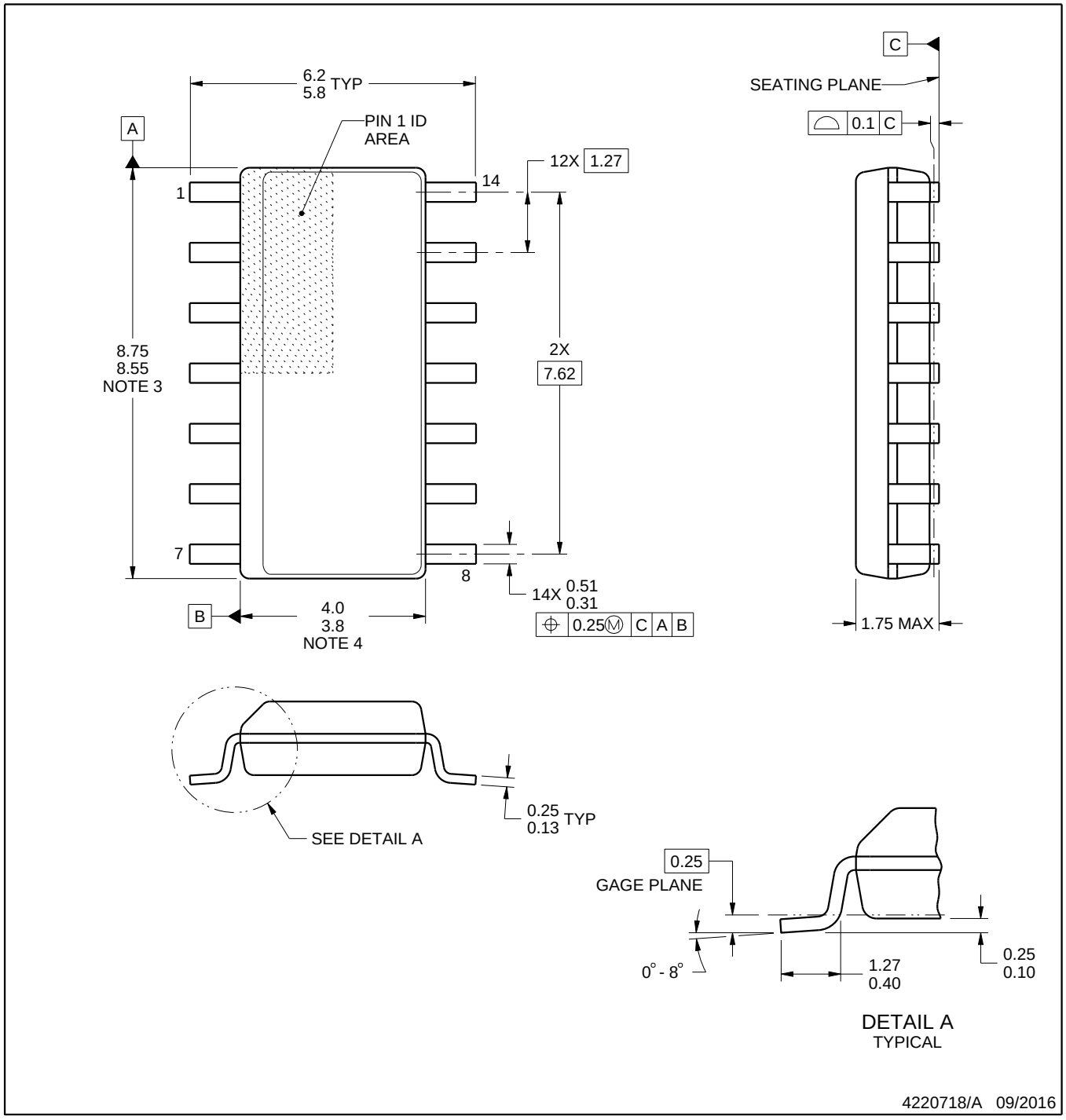

NOTES:

1. All linear dimensions are in millimeters. Dimensions in parenthesis are for reference only. Dimensioning and tolerancing per ASME Y14.5M.
2. This drawing is subject to change without notice.
3. This dimension does not include mold flash, protrusions, or gate burrs. Mold flash, protrusions, or gate burrs shall not exceed 0.15 mm, per side.
4. This dimension does not include interlead flash. Interlead flash shall not exceed 0.43 mm, per side.
5. Reference JEDEC registration MS-012, variation AB.

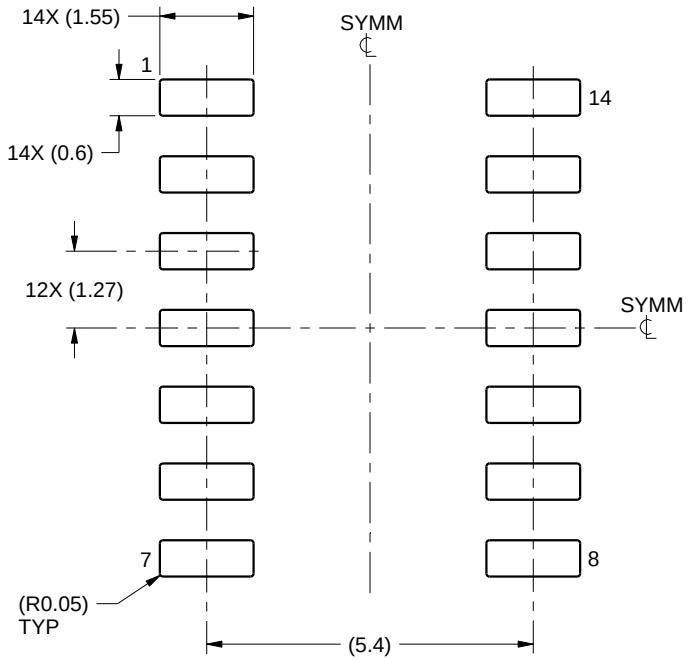

LAND PATTERN EXAMPLE
SCALE:8X

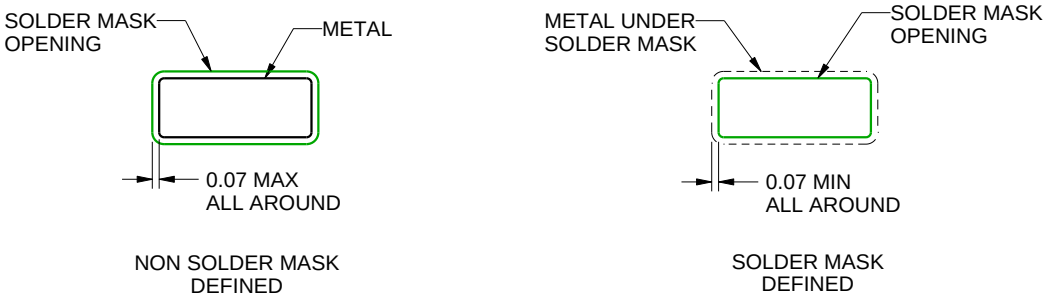

SOLDER MASK DETAILS

4220718/A 09/2016

NOTES: (continued)

6. Publication IPC-7351 may have alternate designs.
7. Solder mask tolerances between and around signal pads can vary based on board fabrication site.

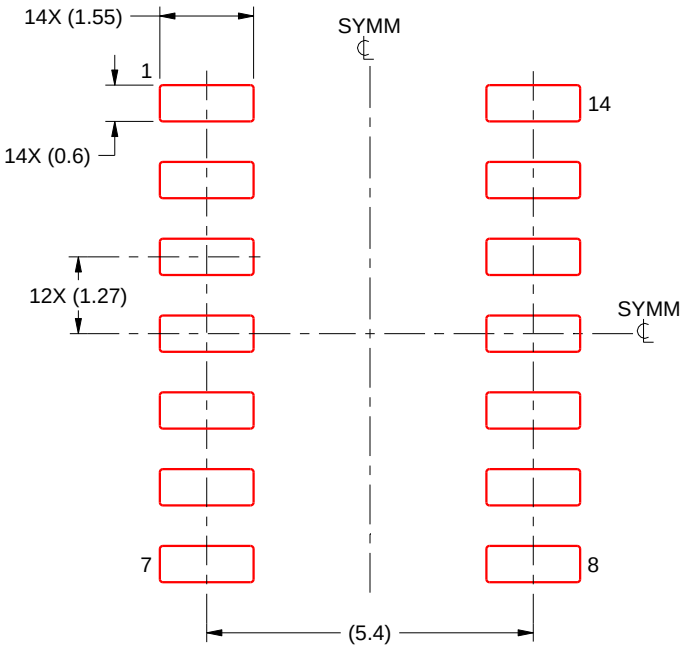

SOLDER PASTE EXAMPLE
BASED ON 0.125 mm THICK STENCIL
SCALE:8X

4220718/A 09/2016

NOTES: (continued)

8. Laser cutting apertures with trapezoidal walls and rounded corners may offer better paste release. IPC-7525 may have alternate design recommendations.
9. Board assembly site may have different recommendations for stencil design.

D (R–PDSO–G16) PLASTIC SMALL OUTLINE

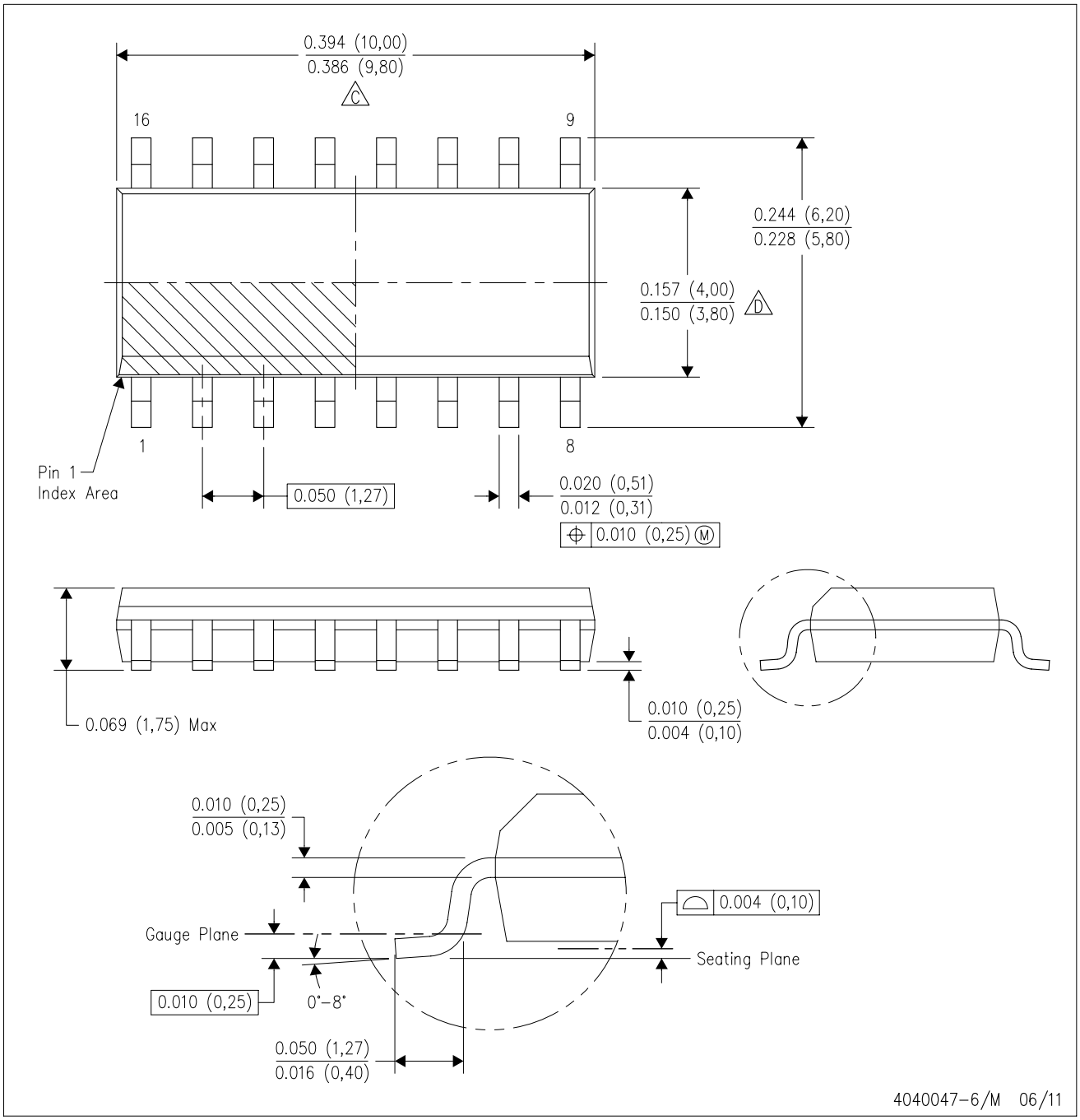

NOTES:
A. All linear dimensions are in inches (millimeters).
B. This drawing is subject to change without notice.
C. Body length does not include mold flash, protrusions, or gate burrs. Mold flash, protrusions, or gate burrs shall not exceed 0.006 (0,15) each side.
D. Body width does not include interlead flash. Interlead flash shall not exceed 0.017 (0,43) each side.
E. Reference JEDEC MS–012 variation AC.

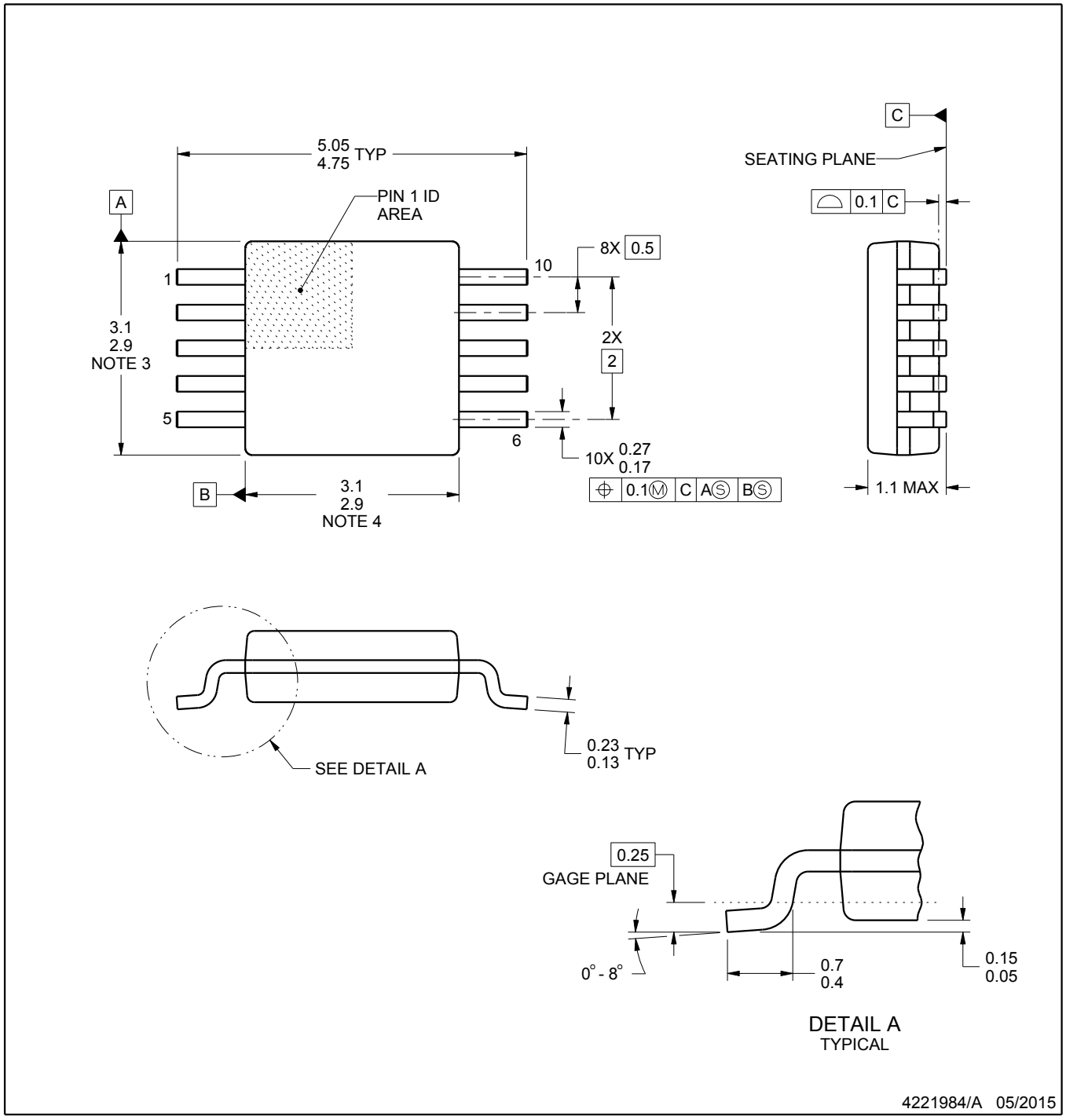

NOTES:

1. All linear dimensions are in millimeters. Any dimensions in parenthesis are for reference only. Dimensioning and tolerancing per ASME Y14.5M.
2. This drawing is subject to change without notice.
3. This dimension does not include mold flash, protrusions, or gate burrs. Mold flash, protrusions, or gate burrs shall not exceed 0.15 mm per side.
4. This dimension does not include interlead flash. Interlead flash shall not exceed 0.25 mm per side.
5. Reference JEDEC registration MO-187, variation BA.

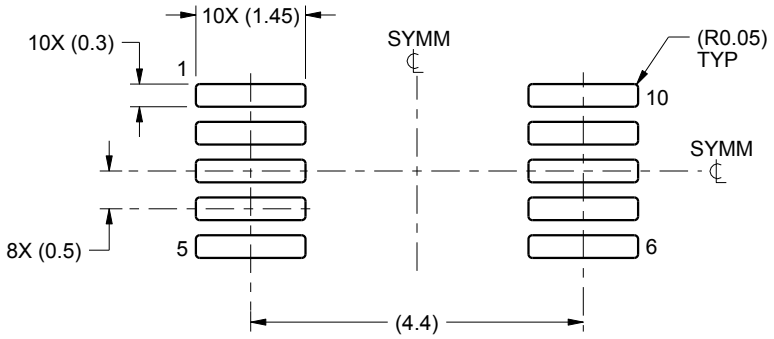

LAND PATTERN EXAMPLE
SCALE:10X

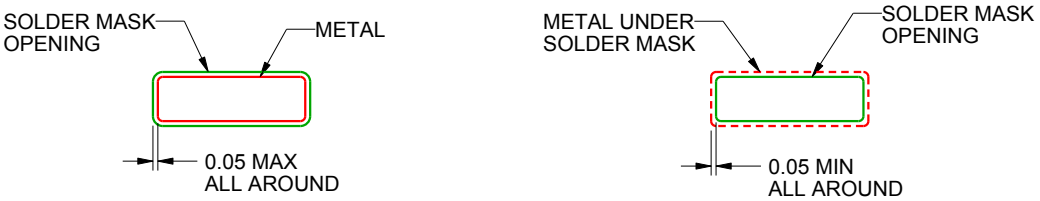

NON SOLDER MASK
DEFINED

SOLDER MASK
DEFINED

SOLDER MASK DETAILS
NOT TO SCALE

4221984/A 05/2015

NOTES: (continued)

6. Publication IPC-7351 may have alternate designs.
7. Solder mask tolerances between and around signal pads can vary based on board fabrication site.

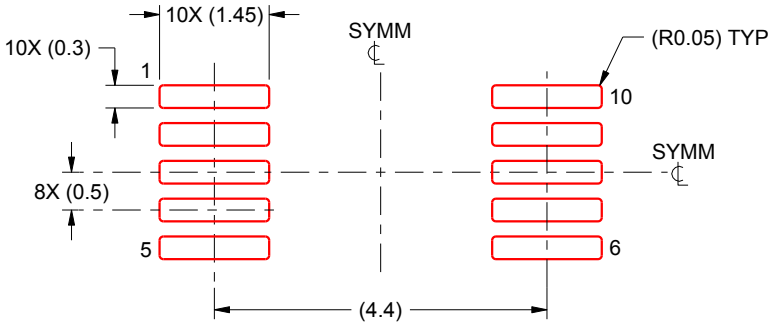

SOLDER PASTE EXAMPLE
BASED ON 0.125 mm THICK STENCIL
SCALE:10X

4221984/A 05/2015

NOTES: (continued)

8. Laser cutting apertures with trapezoidal walls and rounded corners may offer better paste release. IPC-7525 may have alternate design recommendations.
9. Board assembly site may have different recommendations for stencil design.

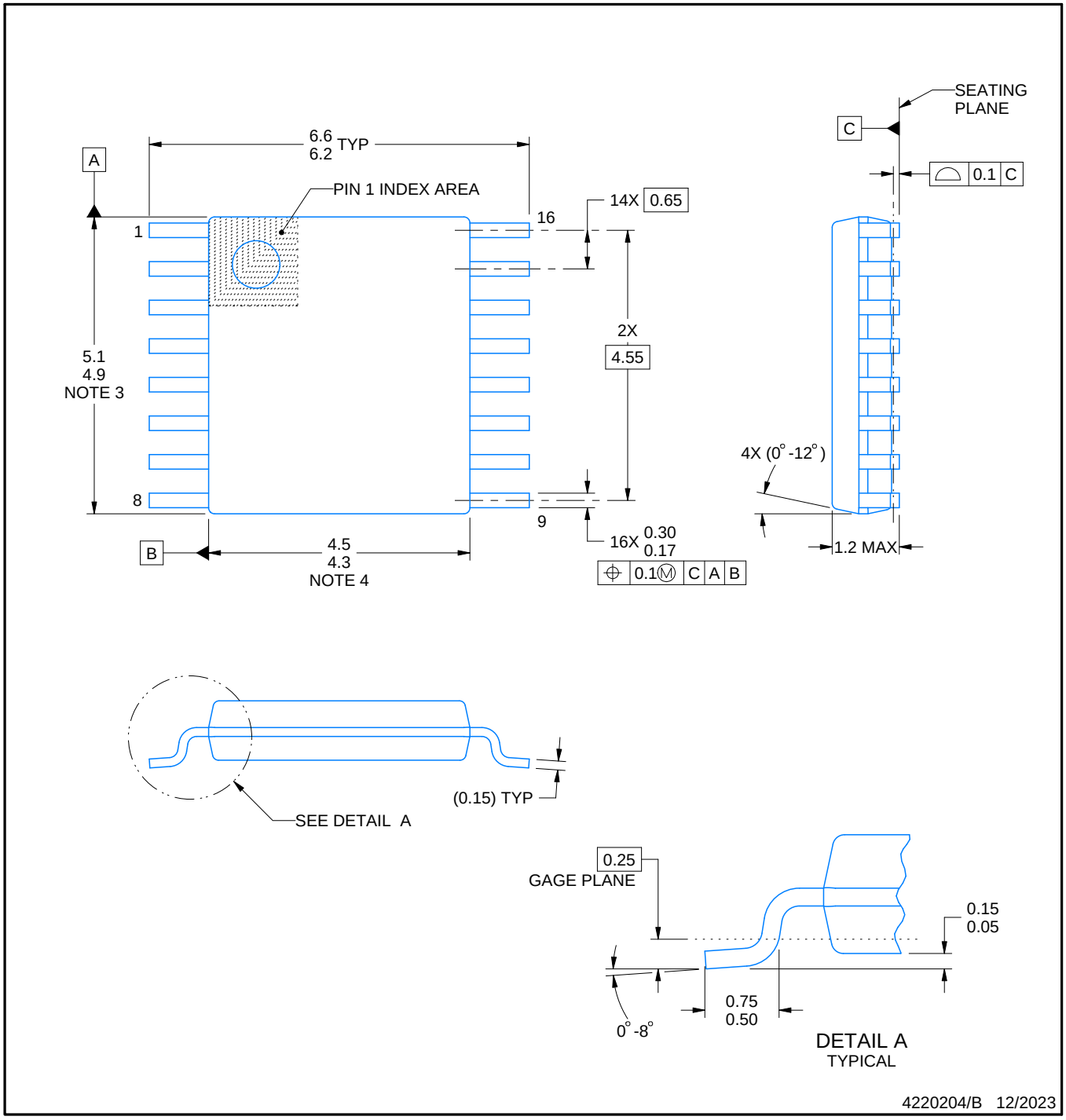

NOTES:

1. All linear dimensions are in millimeters. Any dimensions in parenthesis are for reference only. Dimensioning and tolerancing per ASME Y14.5M.
2. This drawing is subject to change without notice.
3. This dimension does not include mold flash, protrusions, or gate burrs. Mold flash, protrusions, or gate burrs shall not exceed 0.15 mm per side.
4. This dimension does not include interlead flash. Interlead flash shall not exceed 0.25 mm per side.
5. Reference JEDEC registration MO-153.

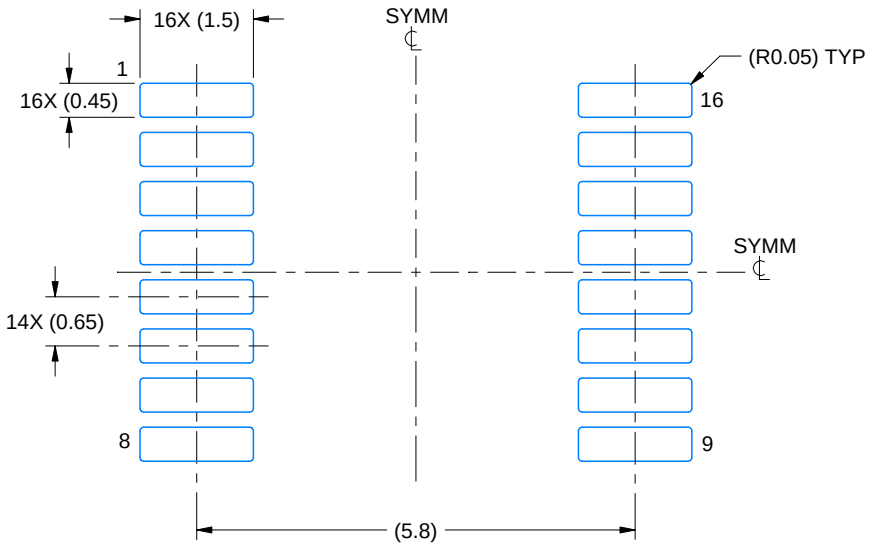

LAND PATTERN EXAMPLE
EXPOSED METAL SHOWN
SCALE: 10X

NON-SOLDER MASK DEFINED (PREFERRED)

SOLDER MASK DEFINED

SOLDER MASK DETAILS

4220204/B 12/2023

NOTES: (continued)

6. Publication IPC-7351 may have alternate designs.
7. Solder mask tolerances between and around signal pads can vary based on board fabrication site.

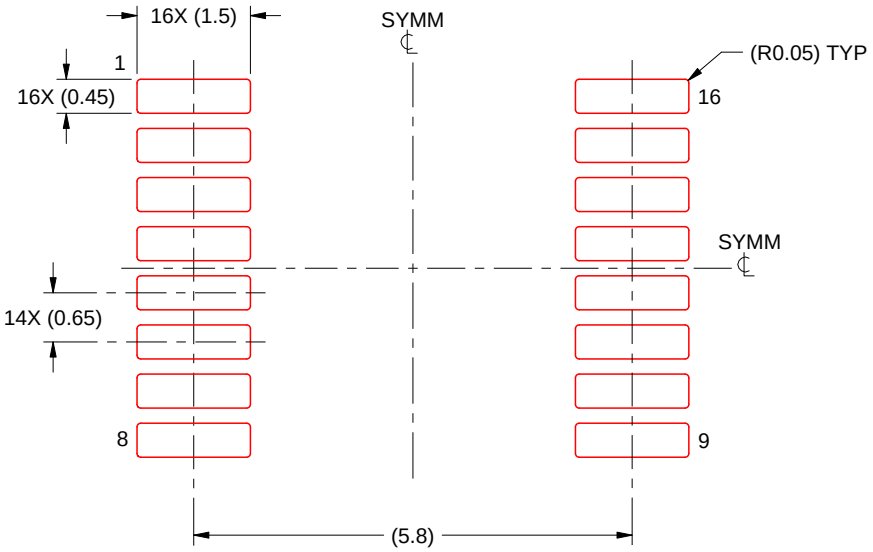

SOLDER PASTE EXAMPLE
BASED ON 0.125 mm THICK STENCIL
SCALE: 10X

4220204/B 12/2023

NOTES: (continued)

8. Laser cutting apertures with trapezoidal walls and rounded corners may offer better paste release. IPC-7525 may have alternate design recommendations.
9. Board assembly site may have different recommendations for stencil design.

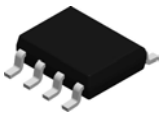

PACKAGE OUTLINE

D0008A

SOIC - 1.75 mm max height

SMALL OUTLINE INTEGRATED CIRCUIT

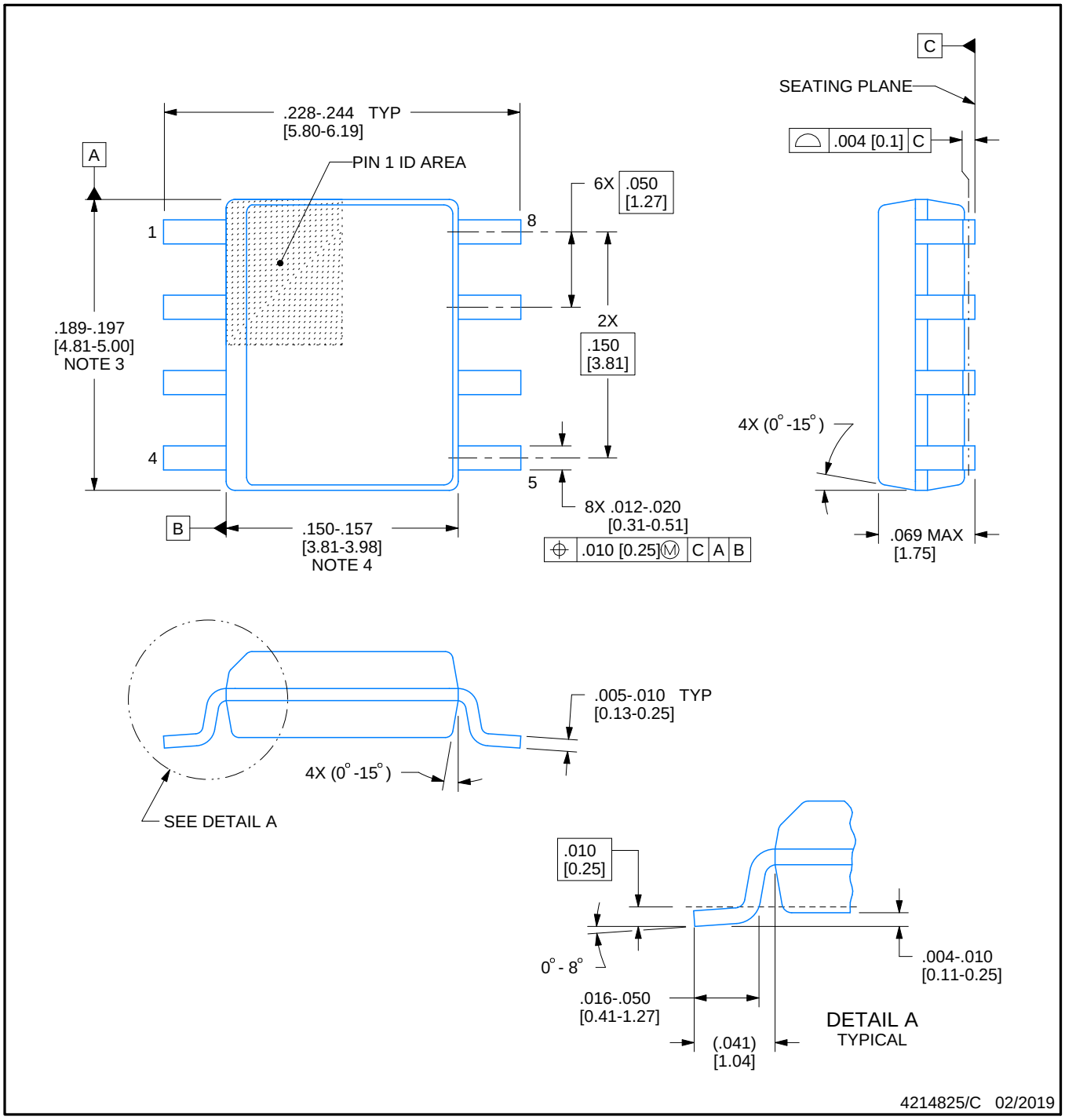

NOTES:

1. Linear dimensions are in inches [millimeters]. Dimensions in parenthesis are for reference only. Controlling dimensions are in inches. Dimensioning and tolerancing per ASME Y14.5M.
2. This drawing is subject to change without notice.
3. This dimension does not include mold flash, protrusions, or gate burrs. Mold flash, protrusions, or gate burrs shall not exceed .006 [0.15] per side.
4. This dimension does not include interlead flash.
5. Reference JEDEC registration MS-012, variation AA.

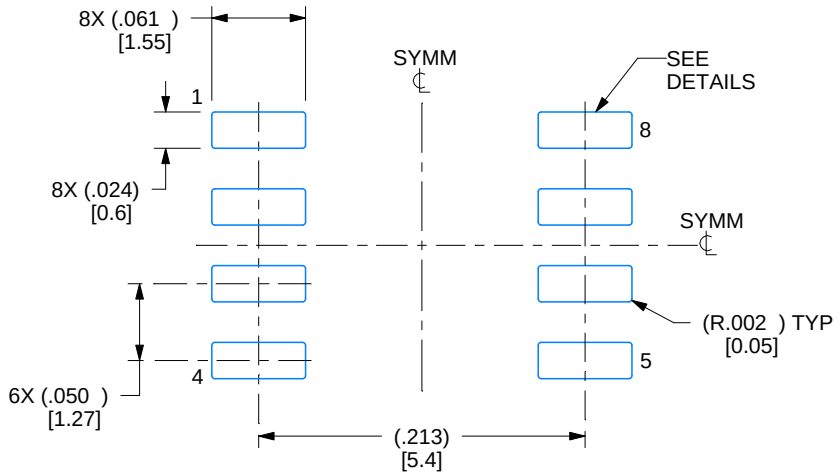

LAND PATTERN EXAMPLE
EXPOSED METAL SHOWN
SCALE:8X

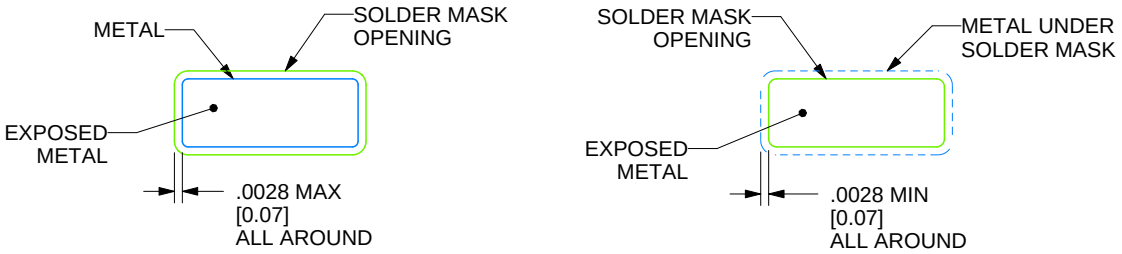

SOLDER MASK DETAILS

4214825/C 02/2019

NOTES: (continued)

6. Publication IPC-7351 may have alternate designs.
7. Solder mask tolerances between and around signal pads can vary based on board fabrication site.

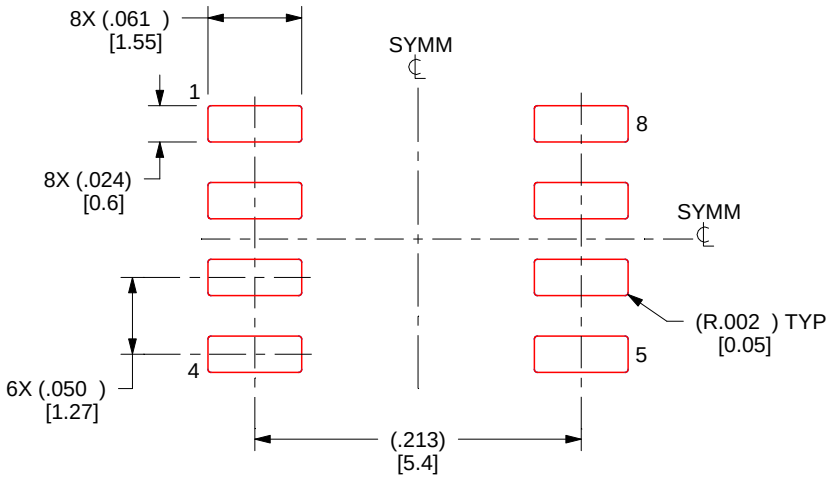

SOLDER PASTE EXAMPLE
BASED ON .005 INCH [0.125 MM] THICK STENCIL
SCALE:8X

4214825/C 02/2019

NOTES: (continued)

8. Laser cutting apertures with trapezoidal walls and rounded corners may offer better paste release. IPC-7525 may have alternate design recommendations.
9. Board assembly site may have different recommendations for stencil design.

P (R–PDIP–T8) PLASTIC DUAL–IN–LINE PACKAGE

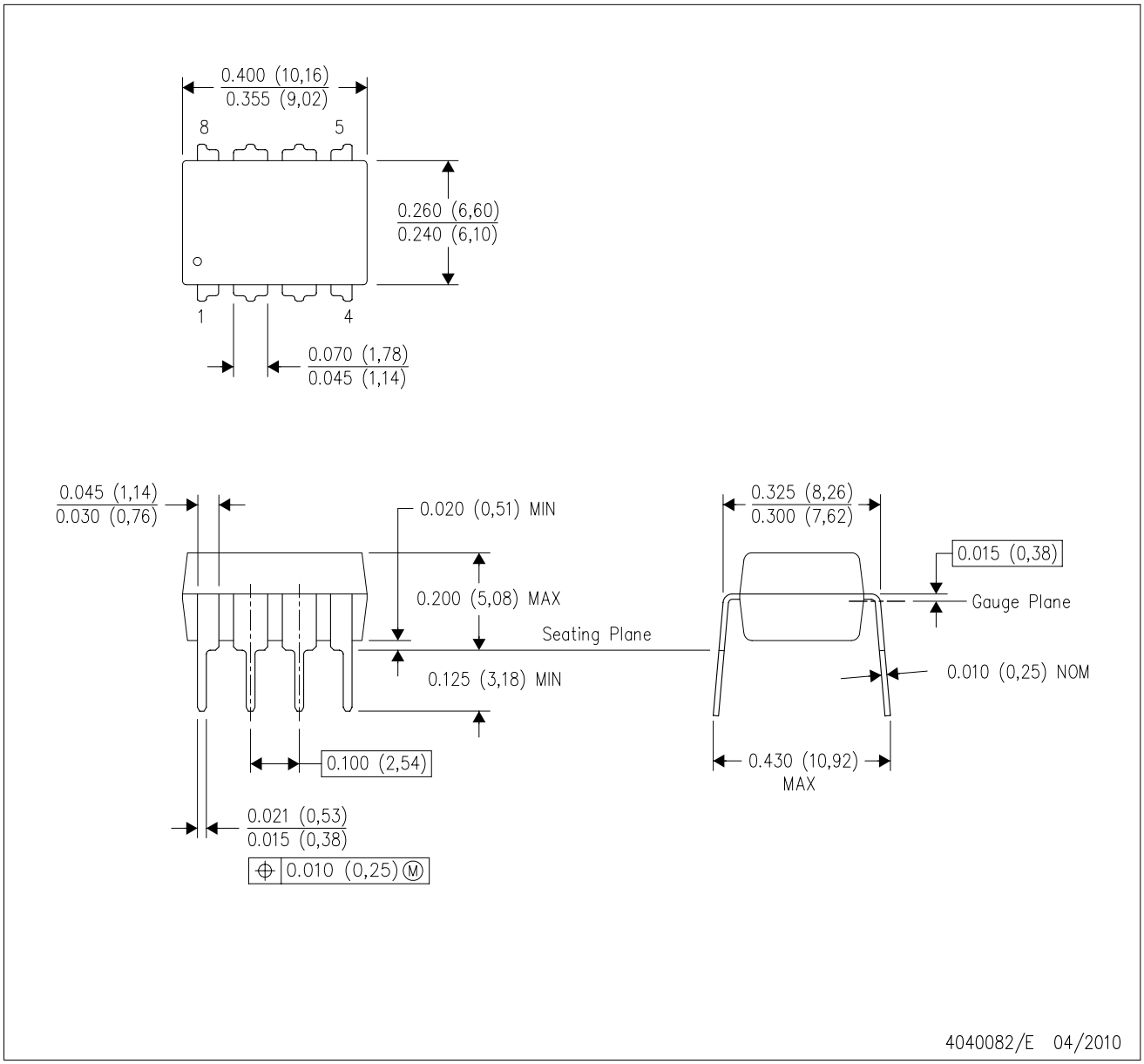

NOTES:
A. All linear dimensions are in inches (millimeters).
B. This drawing is subject to change without notice.
C. Falls within JEDEC MS–001 variation BA.

N (R–PDIP–T**) PLASTIC DUAL–IN–LINE PACKAGE

16 PINS SHOWN

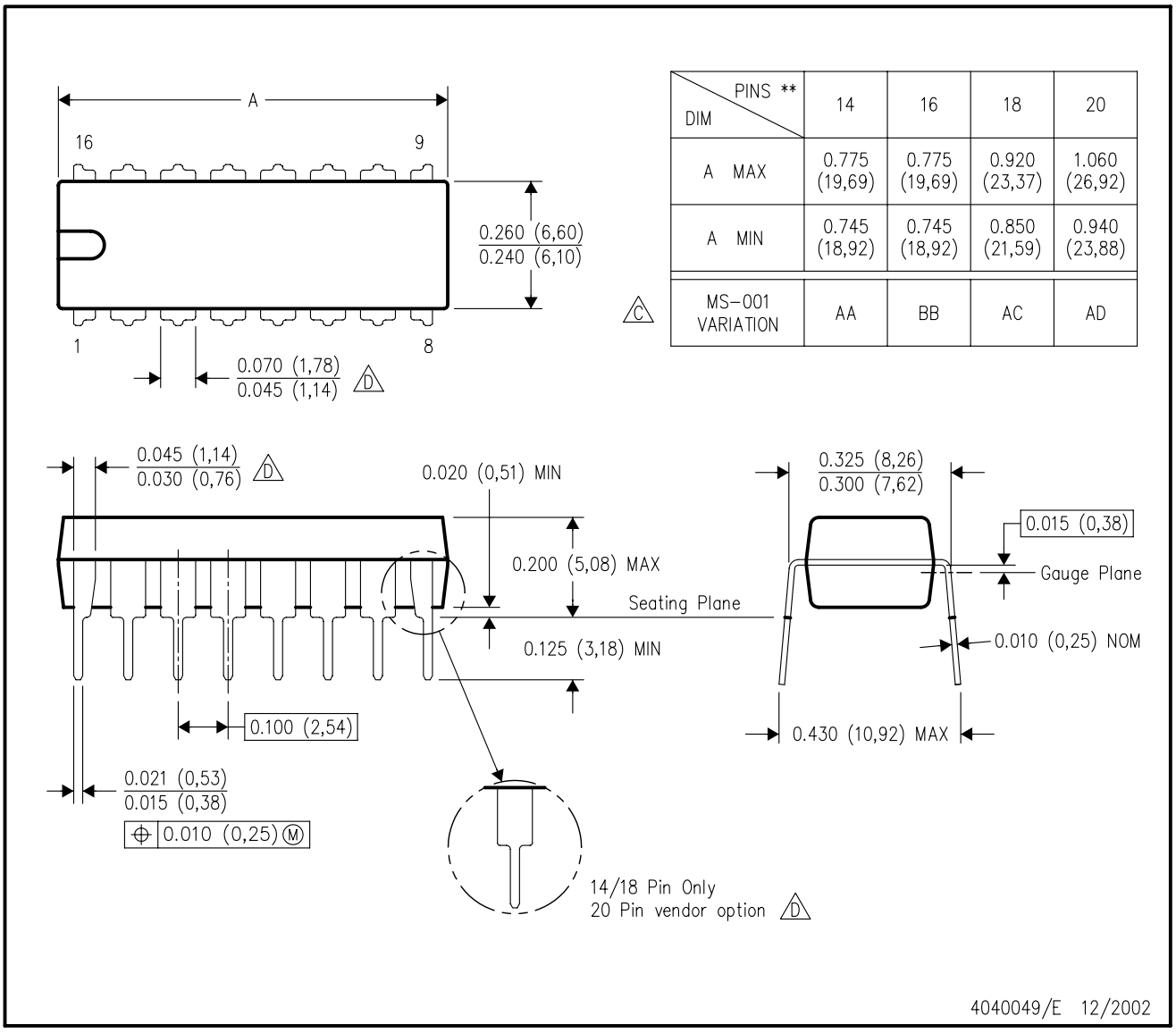

DIM \ PINS **	14	16	18	20
A MAX	0.775 (19,69)	0.775 (19,69)	0.920 (23,37)	1.060 (26,92)
A MIN	0.745 (18,92)	0.745 (18,92)	0.850 (21,59)	0.940 (23,88)
MS–001 VARIATION (C)	AA	BB	AC	AD

NOTES:
A. All linear dimensions are in inches (millimeters).
B. This drawing is subject to change without notice.
C. Falls within JEDEC MS–001, except 18 and 20 pin minimum body length (Dim A).
D. The 20 pin end lead shoulder width is a vendor option, either half or full width.

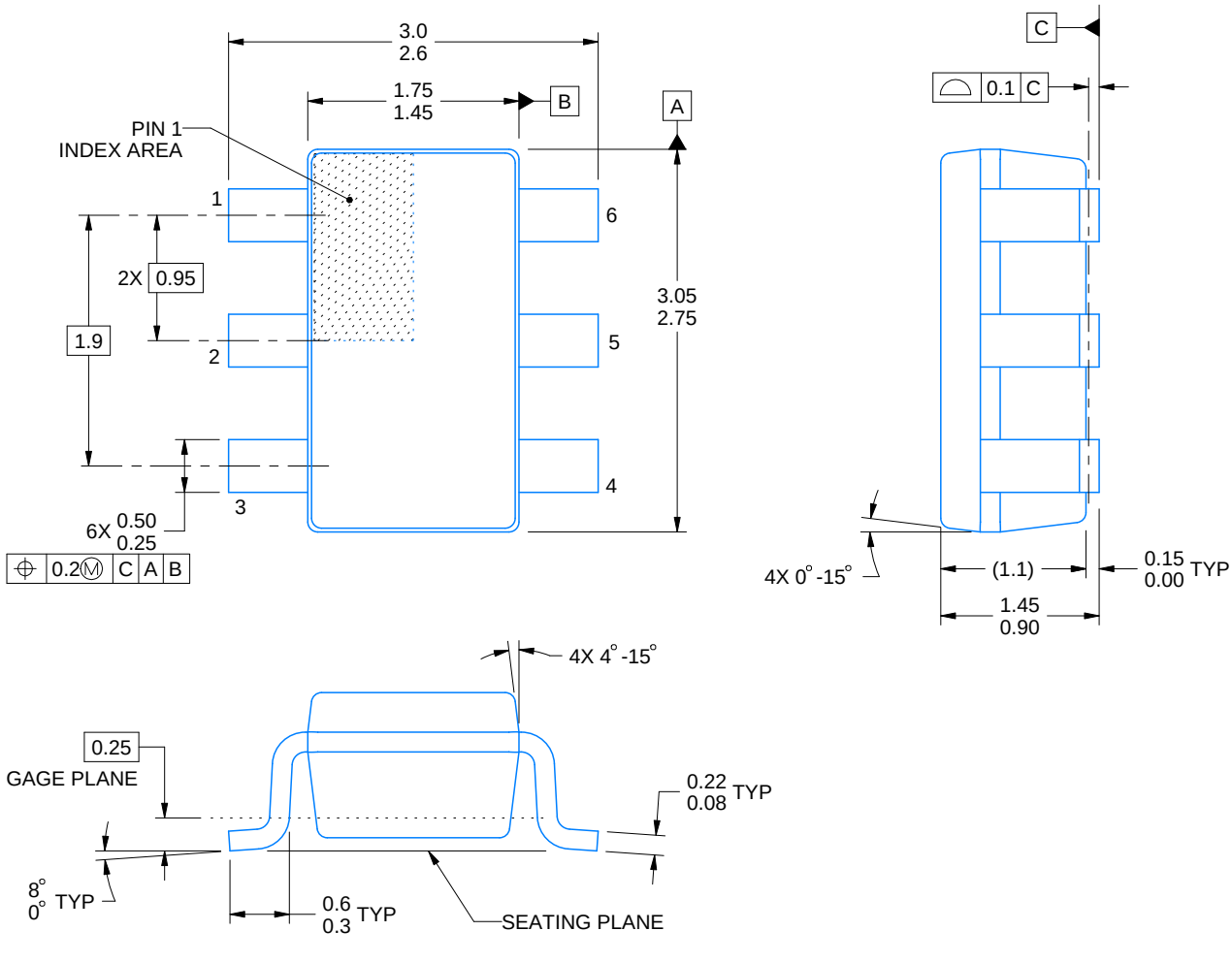

4214840/G 08/2024

NOTES:

1. All linear dimensions are in millimeters. Any dimensions in parenthesis are for reference only. Dimensioning and tolerancing per ASME Y14.5M.
2. This drawing is subject to change without notice.
3. Body dimensions do not include mold flash or protrusion. Mold flash and protrusion shall not exceed 0.25 per side.
4. Leads 1,2,3 may be wider than leads 4,5,6 for package orientation.
5. Refernce JEDEC MO-178.

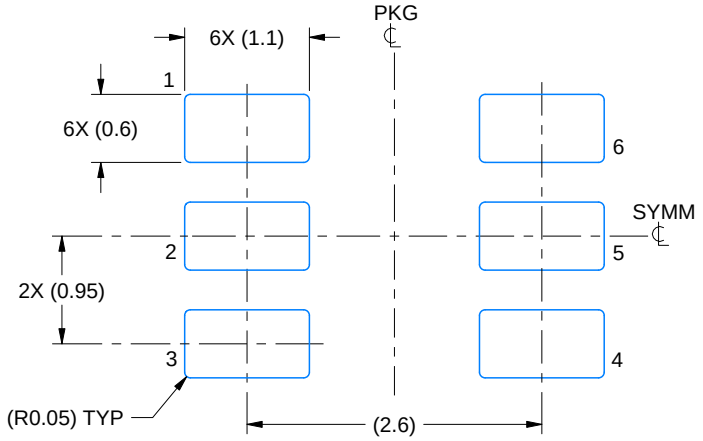

LAND PATTERN EXAMPLE
EXPOSED METAL SHOWN
SCALE:15X

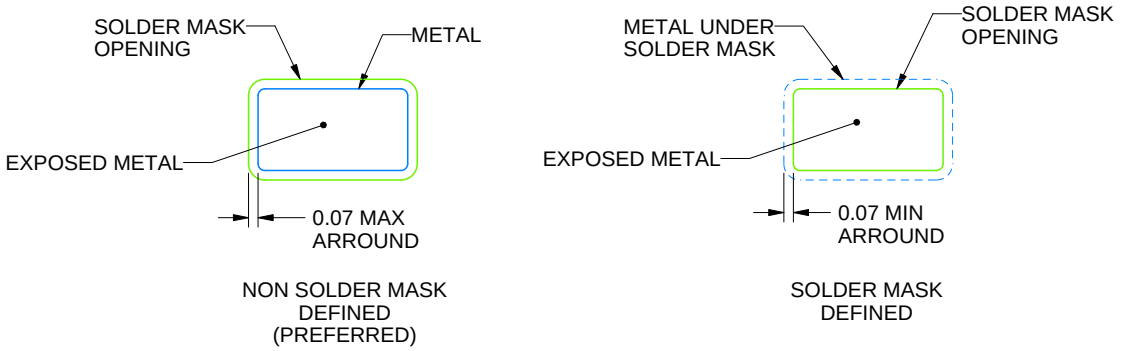

SOLDER MASK DETAILS

4214840/G 08/2024

NOTES: (continued)

6. Publication IPC-7351 may have alternate designs.
7. Solder mask tolerances between and around signal pads can vary based on board fabrication site.

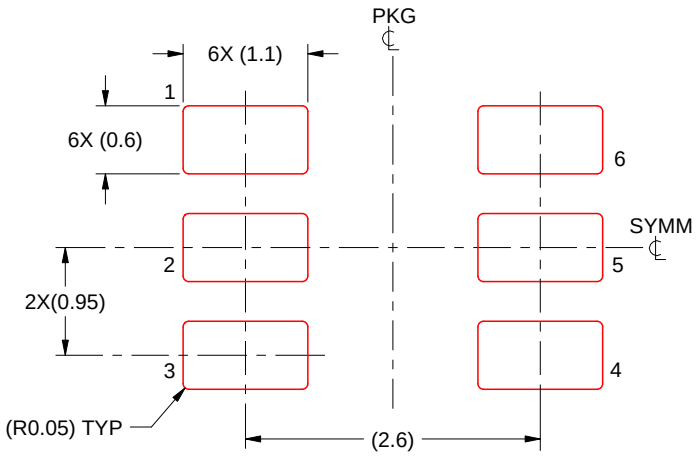

SOLDER PASTE EXAMPLE
BASED ON 0.125 mm THICK STENCIL
SCALE:15X

4214840/G 08/2024

NOTES: (continued)

8. Laser cutting apertures with trapezoidal walls and rounded corners may offer better paste release. IPC-7525 may have alternate design recommendations.
9. Board assembly site may have different recommendations for stencil design.

PW0014A

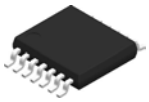

PACKAGE OUTLINE

TSSOP - 1.2 mm max height

SMALL OUTLINE PACKAGE

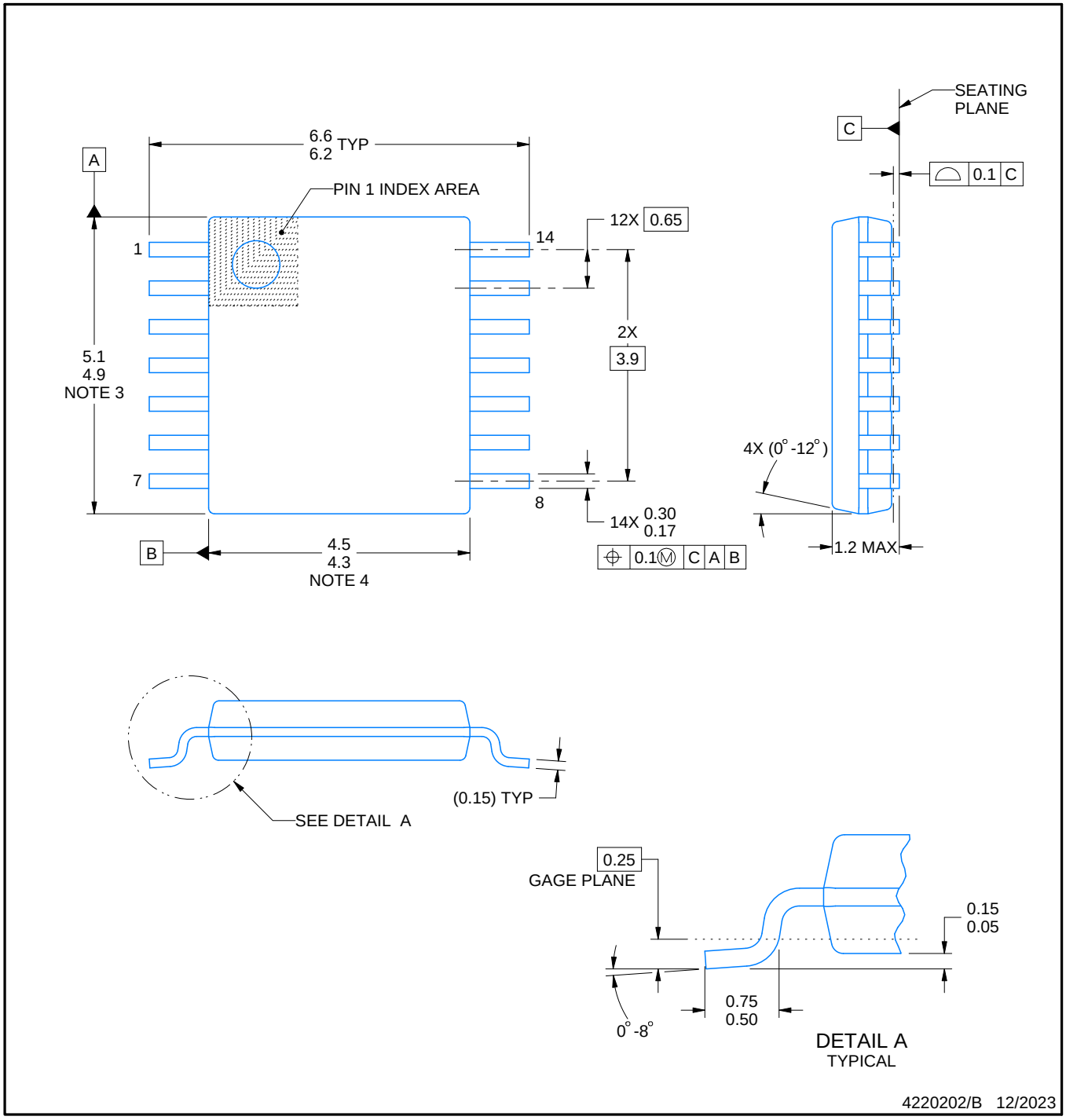

NOTES:

1. All linear dimensions are in millimeters. Any dimensions in parenthesis are for reference only. Dimensioning and tolerancing per ASME Y14.5M.
2. This drawing is subject to change without notice.
3. This dimension does not include mold flash, protrusions, or gate burrs. Mold flash, protrusions, or gate burrs shall not exceed 0.15 mm per side.
4. This dimension does not include interlead flash. Interlead flash shall not exceed 0.25 mm per side.
5. Reference JEDEC registration MO-153.

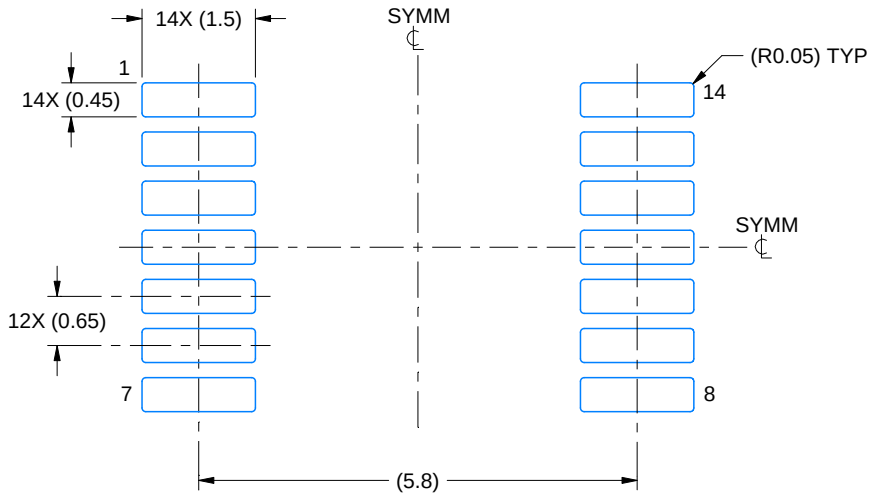

LAND PATTERN EXAMPLE
EXPOSED METAL SHOWN
SCALE: 10X

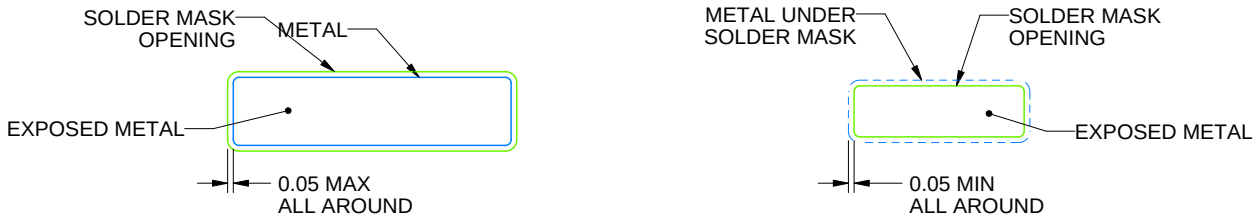

NON-SOLDER MASK DEFINED (PREFERRED)

SOLDER MASK DEFINED

SOLDER MASK DETAILS

4220202/B 12/2023

NOTES: (continued)

6. Publication IPC-7351 may have alternate designs.
7. Solder mask tolerances between and around signal pads can vary based on board fabrication site.

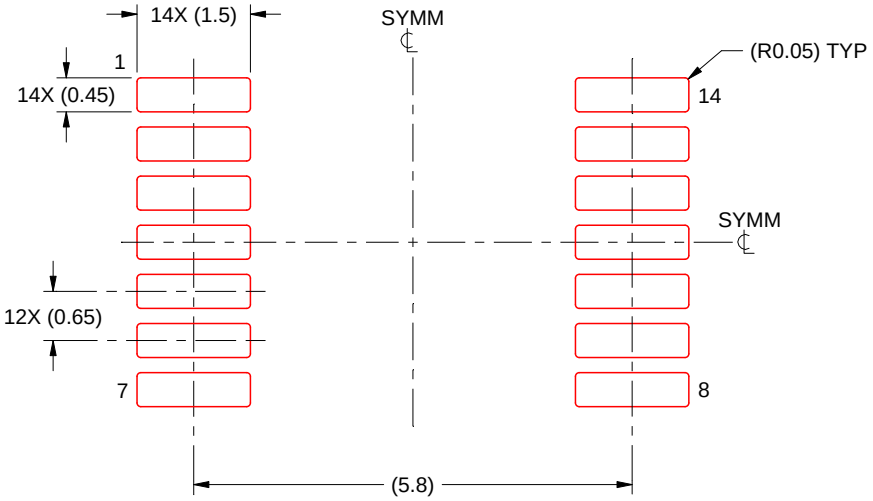

SOLDER PASTE EXAMPLE
BASED ON 0.125 mm THICK STENCIL
SCALE: 10X

4220202/B 12/2023

NOTES: (continued)

8. Laser cutting apertures with trapezoidal walls and rounded corners may offer better paste release. IPC-7525 may have alternate design recommendations.
9. Board assembly site may have different recommendations for stencil design.

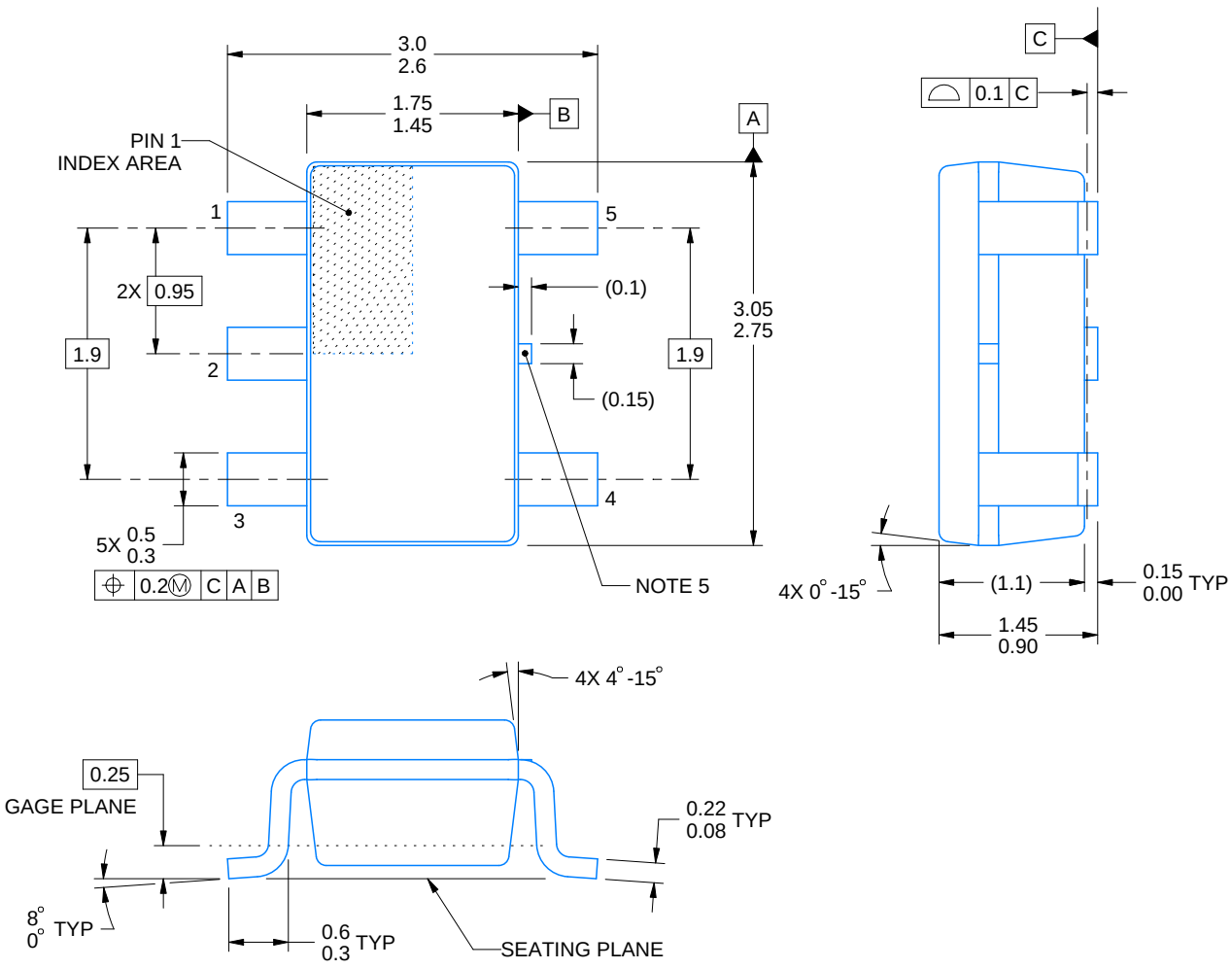

4214839/K 08/2024

NOTES:

1. All linear dimensions are in millimeters. Any dimensions in parenthesis are for reference only. Dimensioning and tolerancing per ASME Y14.5M.
2. This drawing is subject to change without notice.
3. Refernce JEDEC MO-178.
4. Body dimensions do not include mold flash, protrusions, or gate burrs. Mold flash, protrusions, or gate burrs shall not exceed 0.25 mm per side.
5. Support pin may differ or may not be present.

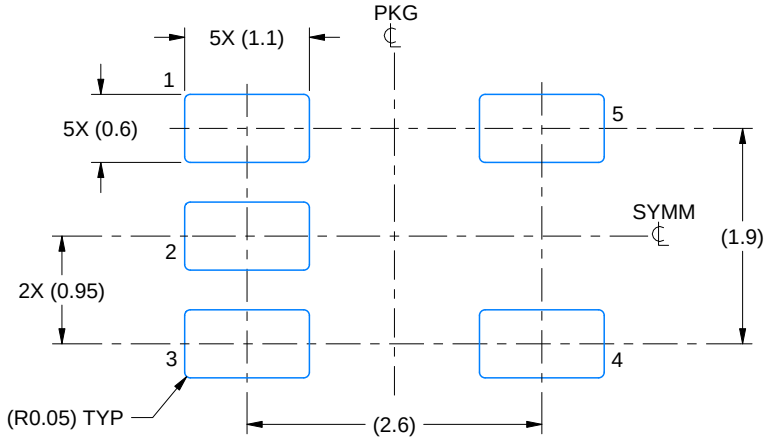

LAND PATTERN EXAMPLE
EXPOSED METAL SHOWN
SCALE:15X

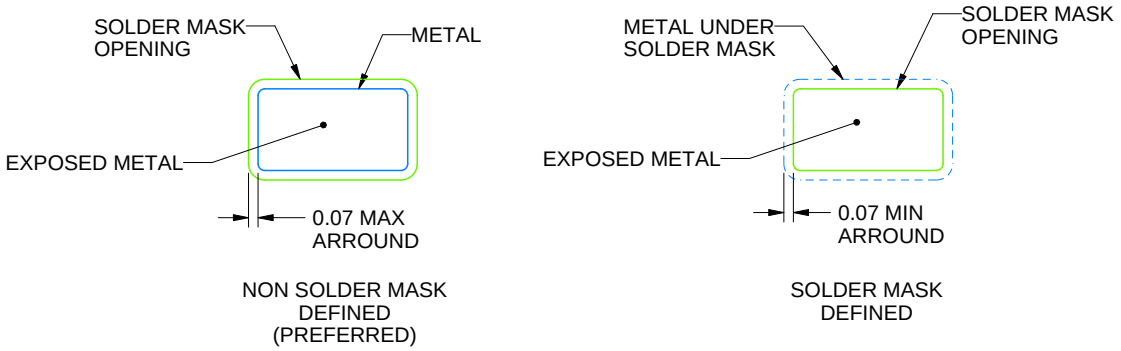

SOLDER MASK DETAILS

4214839/K 08/2024

NOTES: (continued)

6. Publication IPC-7351 may have alternate designs.
7. Solder mask tolerances between and around signal pads can vary based on board fabrication site.

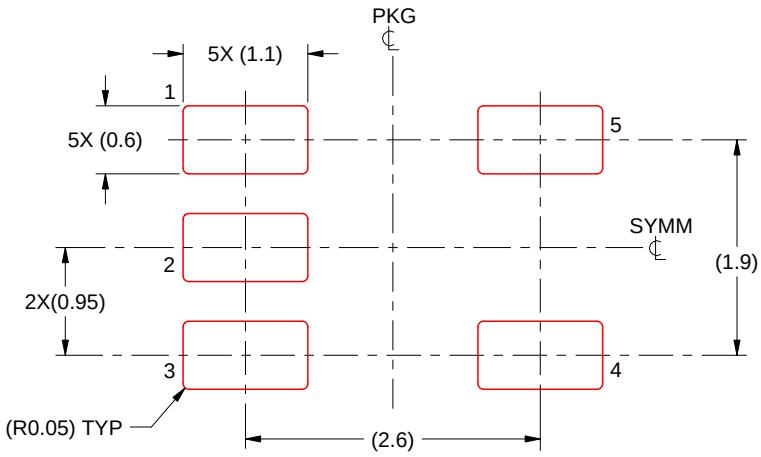

SOLDER PASTE EXAMPLE
BASED ON 0.125 mm THICK STENCIL
SCALE:15X

4214839/K 08/2024

NOTES: (continued)

8. Laser cutting apertures with trapezoidal walls and rounded corners may offer better paste release. IPC-7525 may have alternate design recommendations.
9. Board assembly site may have different recommendations for stencil design.

PACKAGE OUTLINE

DGK0008A

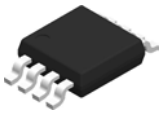

VSSOP - 1.1 mm max height

SMALL OUTLINE PACKAGE

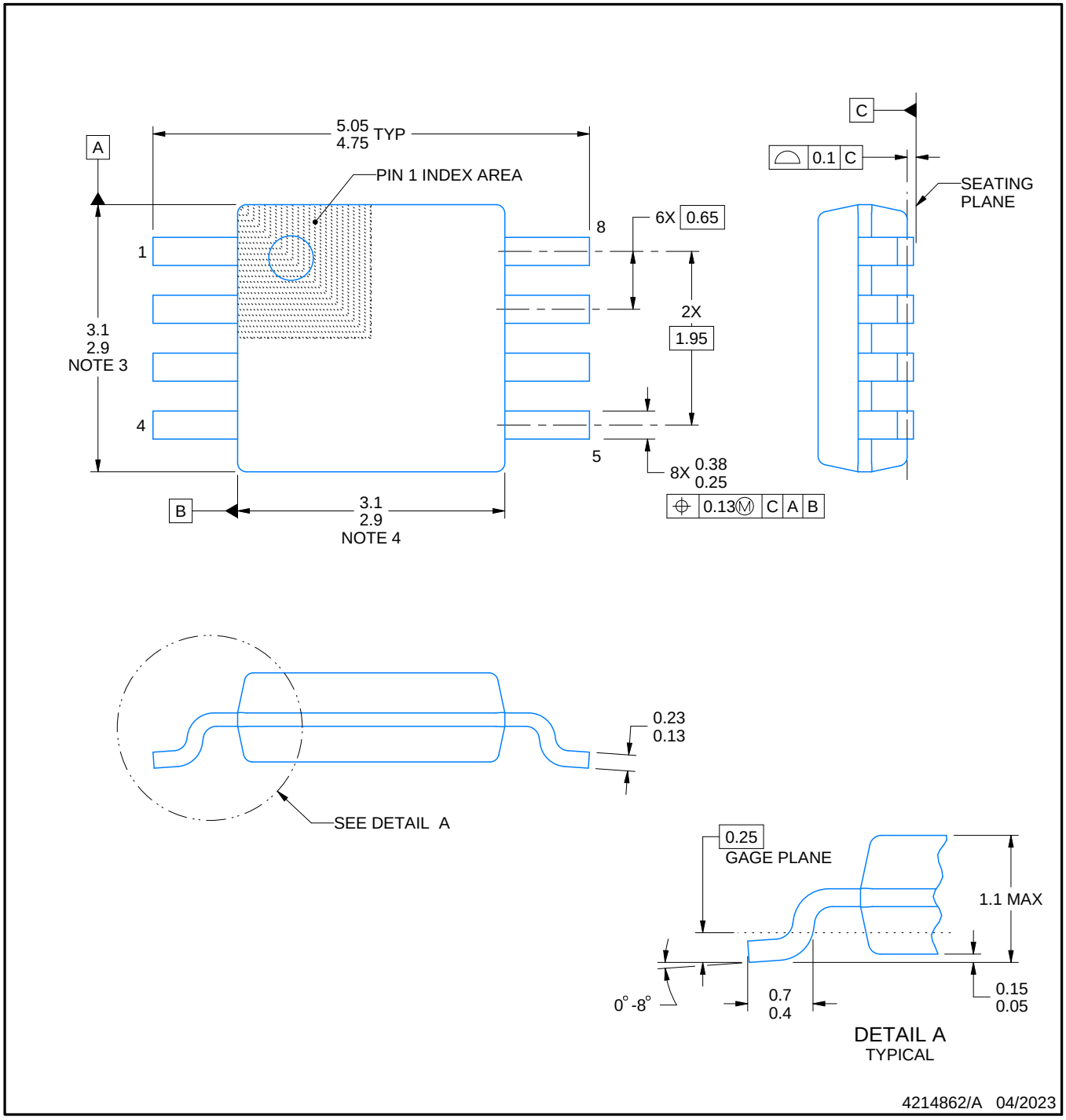

PowerPAD is a trademark of Texas Instruments.

NOTES:

1. All linear dimensions are in millimeters. Any dimensions in parenthesis are for reference only. Dimensioning and tolerancing per ASME Y14.5M.
2. This drawing is subject to change without notice.
3. This dimension does not include mold flash, protrusions, or gate burrs. Mold flash, protrusions, or gate burrs shall not exceed 0.15 mm per side.
4. This dimension does not include interlead flash. Interlead flash shall not exceed 0.25 mm per side.
5. Reference JEDEC registration MO-187.

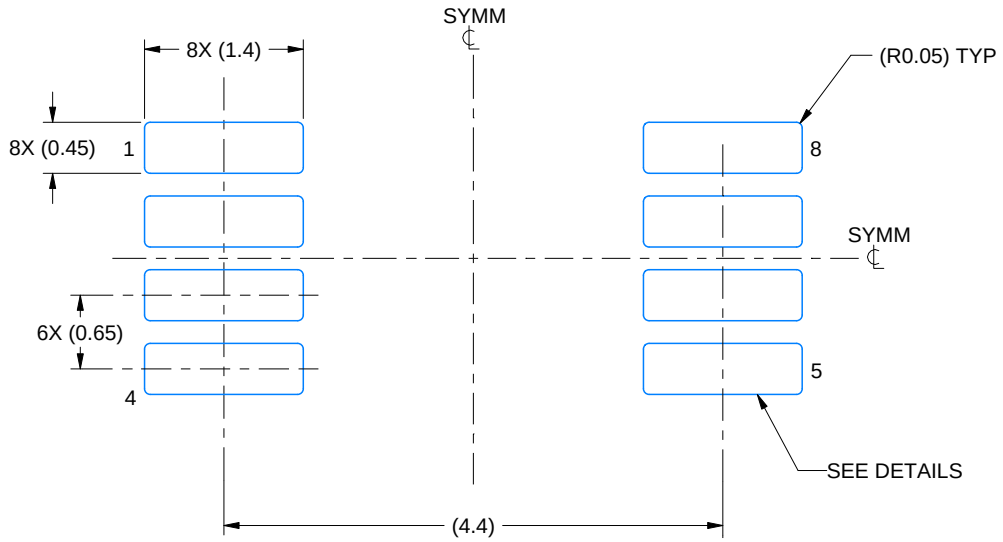

LAND PATTERN EXAMPLE
EXPOSED METAL SHOWN
SCALE: 15X

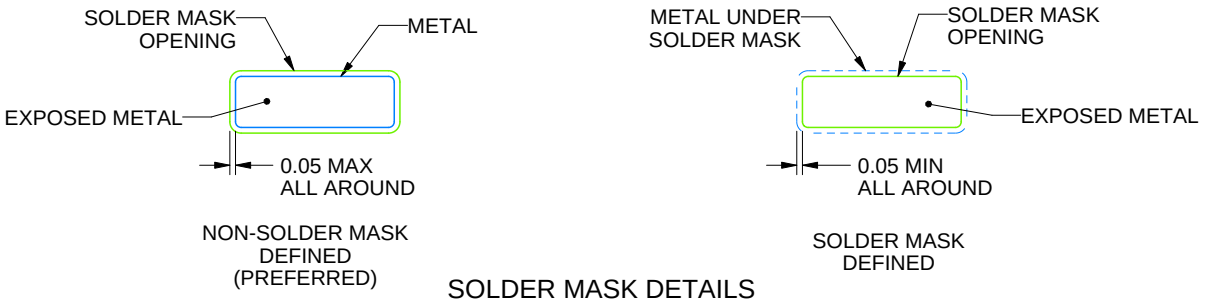

SOLDER MASK DETAILS

4214862/A 04/2023

NOTES: (continued)

6. Publication IPC-7351 may have alternate designs.
7. Solder mask tolerances between and around signal pads can vary based on board fabrication site.
8. Vias are optional depending on application, refer to device data sheet. If any vias are implemented, refer to their locations shown on this view. It is recommended that vias under paste be filled, plugged or tented.
9. Size of metal pad may vary due to creepage requirement.

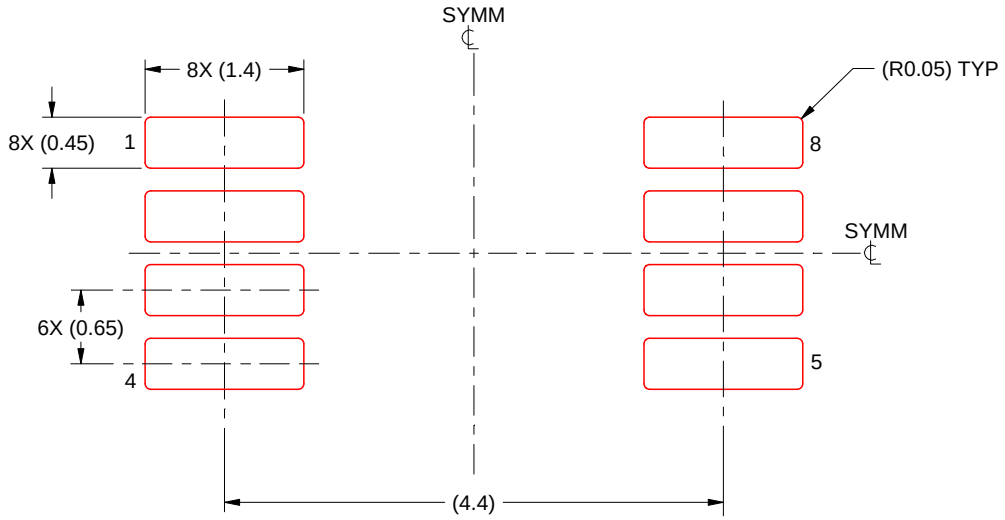

SOLDER PASTE EXAMPLE
SCALE: 15X

4214862/A 04/2023

NOTES: (continued)

11. Laser cutting apertures with trapezoidal walls and rounded corners may offer better paste release. IPC-7525 may have alternate design recommendations.
12. Board assembly site may have different recommendations for stencil design.

IMPORTANT NOTICE AND DISCLAIMER

TI PROVIDES TECHNICAL AND RELIABILITY DATA (INCLUDING DATASHEETS), DESIGN RESOURCES (INCLUDING REFERENCE DESIGNS), APPLICATION OR OTHER DESIGN ADVICE, WEB TOOLS, SAFETY INFORMATION, AND OTHER RESOURCES “AS IS” AND WITH ALL FAULTS, AND DISCLAIMS ALL WARRANTIES, EXPRESS AND IMPLIED, INCLUDING WITHOUT LIMITATION ANY IMPLIED WARRANTIES OF MERCHANTABILITY, FITNESS FOR A PARTICULAR PURPOSE OR NON-INFRINGEMENT OF THIRD PARTY INTELLECTUAL PROPERTY RIGHTS.

These resources are intended for skilled developers designing with TI products. You are solely responsible for (1) selecting the appropriate TI products for your application, (2) designing, validating and testing your application, and (3) ensuring your application meets applicable standards, and any other safety, security, regulatory or other requirements.

These resources are subject to change without notice. TI grants you permission to use these resources only for development of an application that uses the TI products described in the resource. Other reproduction and display of these resources is prohibited. No license is granted to any other TI intellectual property right or to any third party intellectual property right. TI disclaims responsibility for, and you fully indemnify TI and its representatives against any claims, damages, costs, losses, and liabilities arising out of your use of these resources.

TI’s products are provided subject to TI’s Terms of Sale, TI’s General Quality Guidelines, or other applicable terms available either on ti.com or provided in conjunction with such TI products. TI’s provision of these resources does not expand or otherwise alter TI’s applicable warranties or warranty disclaimers for TI products. Unless TI explicitly designates a product as custom or customer-specified, TI products are standard, catalog, general purpose devices.

TI objects to and rejects any additional or different terms you may propose.

Copyright © 2026, Texas Instruments Incorporated

Last updated 10/2025