HDMI HIDER

Check for Samples: TMDS141

FEATURES

- **Supports 2.25 Gbps Signaling Rate for up to 1080p Resolutions Supporting 36-bits Per Pixel for Color Depth of 12-bits Per Color**
- **Compatible with HDMI 1.3a**
- **Integrated Receiver Termination**
- **8-dB Equalizer Compensates Losses from 5-m or Longer HDMI Cables**
- **Selectable Output De-Emphasis Supports 1-m HDMI Transmission**
- **I^2C™ Repeater Isolates Bus Capacitance at Both Ends**
- **High Impedance Outputs When Disabled**
- **TMDS Inputs HBM ESD Protection Exceeds 6 kV**
- **3.3-V Supply Operation**
- **40-Pin QFN Package (RHA)**
- **ROHS Compatible and 260°C Reflow Rated**
- **Accepts AC Couple DisplayPort Dual-Mode Signals and Translates Them into a HDMI1.3a Compatable TMDS Signal**

APPLICATIONS

- **Digital TV**
- **DVD Player**
- **Set-Top-Box**
- **Audio Video Receiver**
- **Digital Projector**
- **DVI or HDMI cable**
- **DisplayPort Level Translator**

DESCRIPTION

The TMDS141 HDMI hider is designed to accommodate a 1-m HDMI cable between a HDMI connector and a receiver. The internal cable causes signal distortion to high-speed TMDS signals, as well as increasing capacitance to the DDC channel. Each TMDS141 contains four TMDS repeaters to transmit digital content with signaling rates of up to 2.25-Gbps, and an I^2C repeater to link extended display identification data (EDID) reading and high-bandwidth digital content protection (HDCP) key exchange under I^2C standard mode operations.

The device includes four TMDS compliant differential receivers with 50-Ω termination resistors and 3.3-V termination voltage integrated at each receiver input pin. External terminations are not required. A built-in frequency response equalization circuit, 8 dB at 825 MHz, compensates inter-symbol interference (ISI) losses from a 5-m or longer input cable link.

The device also includes four TMDS compliant differential drivers. A precision resistor is connected externally from the VSADJ pin to ground for setting the differential output voltage to be compliant with the TMDS standard. A selectable de-emphasis circuit is available via the PRE input to drive long PCB traces or cables. When PRE is high, the 3.5-dB high frequency gain offsets the losses due to the FR4 trace. PRE can be left open or kept low when the de-emphasis function is not desired.

Figure 1. TYPICAL APPLICATION

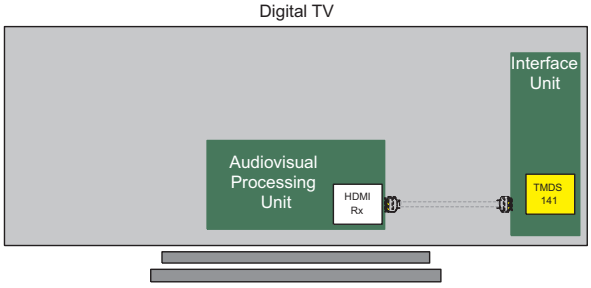

Please be aware that an important notice concerning availability, standard warranty, and use in critical applications of Texas Instruments semiconductor products and disclaimers thereto appears at the end of this data sheet.

PowerPAD is a trademark of Texas Instruments.
I^2C is a trademark of Philips Electronics.

PRODUCTION DATA information is current as of publication date. Products conform to specifications per the terms of the Texas Instruments standard warranty. Production processing does not necessarily include testing of all parameters.

Copyright © 2006–2011, Texas Instruments Incorporated

These devices have limited built-in ESD protection. The leads should be shorted together or the device placed in conductive foam during storage or handling to prevent electrostatic damage to the MOS gates.

DESCRIPTION CONTINUED

With standard TMDS terminations at the outputs, all TMDS outputs are forced high-impedance when $\overline{OE}$ is set high. The I^2C repeater isolates the buses without accumulating the capacitance of both sides. It allows DDC capacitance to be controlled under the desired load. The I^2C outputs are high-impedance when device supply voltage is less than 1.5 V or I2CEN is low. The OVS pin, output voltage select, provides the flexibility of adjusting the output voltage level of the TSCL and TSDA side to optimize noise margins while interfacing to different HDMI receivers. The device is characterized for operation from 0°C to 70°C.

FUNCTIONAL BLOCK DIAGRAM

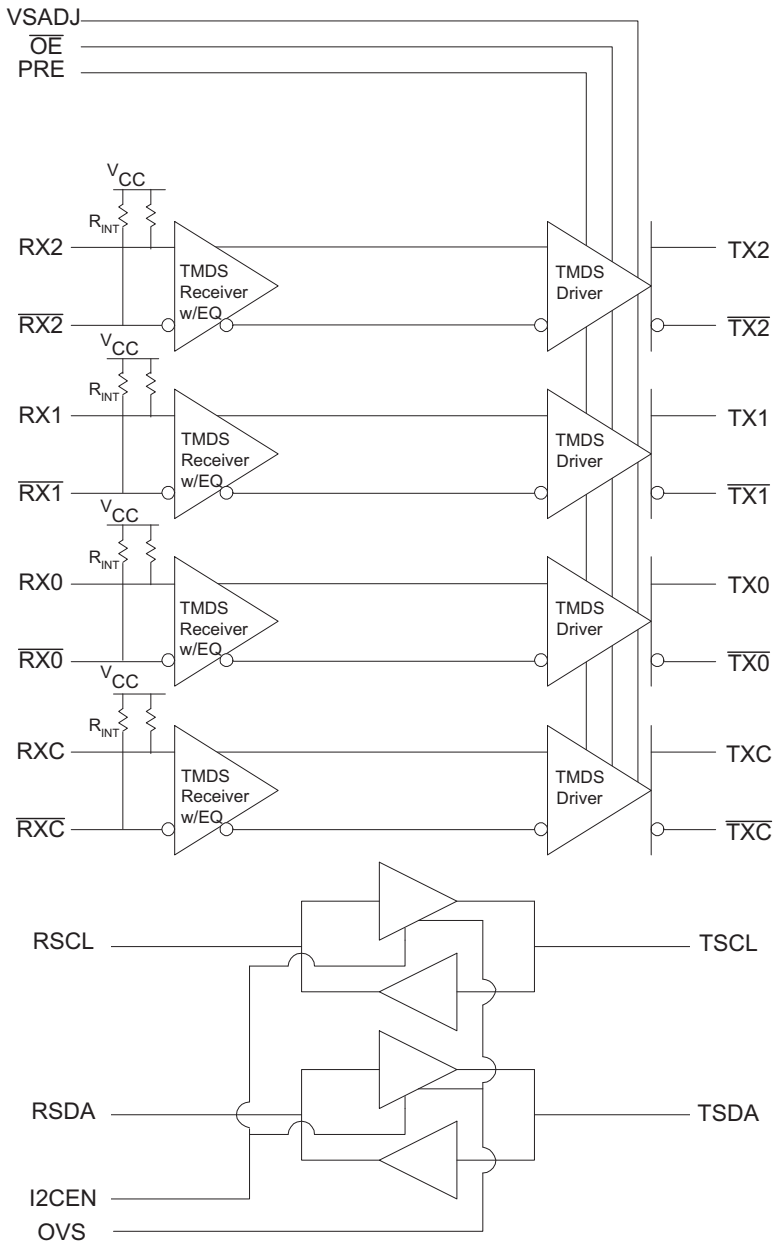

Copyright © 2006–2011, Texas Instruments Incorporated

RHA PACKAGE
(TOP VIEW)

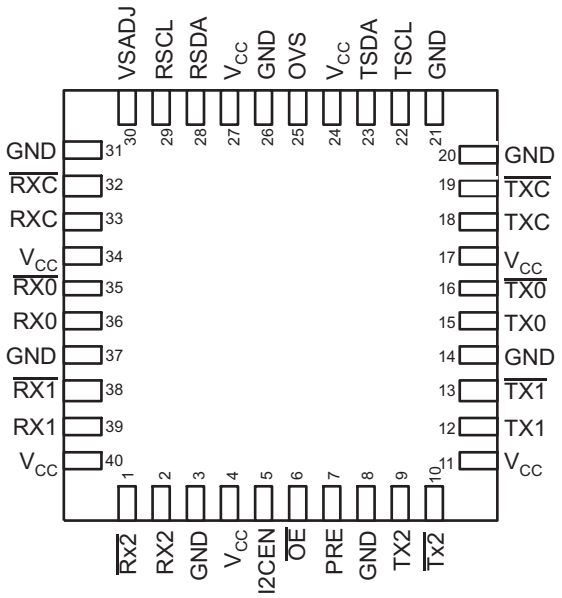

TERMINAL FUNCTIONS

TERMINAL		I/O	DESCRIPTION
NAME	NO.		
$\overline{RX2}$, $\overline{RX1}$, $\overline{RX0}$, $\overline{RXC}$	1, 38, 35, 32	I	TMDS Negative inputs
RX2, RX1, RX0, RXC	2, 39, 36, 33	I	TMDS Positive inputs
$\overline{TX2}$, $\overline{TX1}$, $\overline{TX0}$, $\overline{TXC}$	10, 13, 16, 19	O	TMDS Negative outputs
TX2, TX1, TX0, TXC	9, 12, 15, 18	O	TMDS Positive outputs
RSCL	29	I/O	DDC Bus clock line to source
RSDA	28	I/O	DDC Bus data line to source
TSCL	22	I/O	DDC Bus clock line to sink
TSDA	23	I/O	DDC Bus data line to sink
VSADJ	30	I	TMDS Compliant voltage swing control
I2CEN	5	I	I^2C Repeater enable Low: High-Z High: Active
OVS	25	I	TSCL/TSDA Output voltage select
$\overline{OE}$	6	I	TMDS Output enable Low: Active High: High-Z
PRE	7	I	TMDS Output de-emphasis adjustment Low: 0 dB High: 3.5 dB
V_{CC}	4, 11, 17, 24, 27, 34, 40		Power supply
GND	3, 8, 14, 20, 21, 26, 31, 37		Ground

Copyright © 2006–2011, Texas Instruments Incorporated

EQUIVALENT INPUT AND OUTPUT SCHEMATIC DIAGRAMS

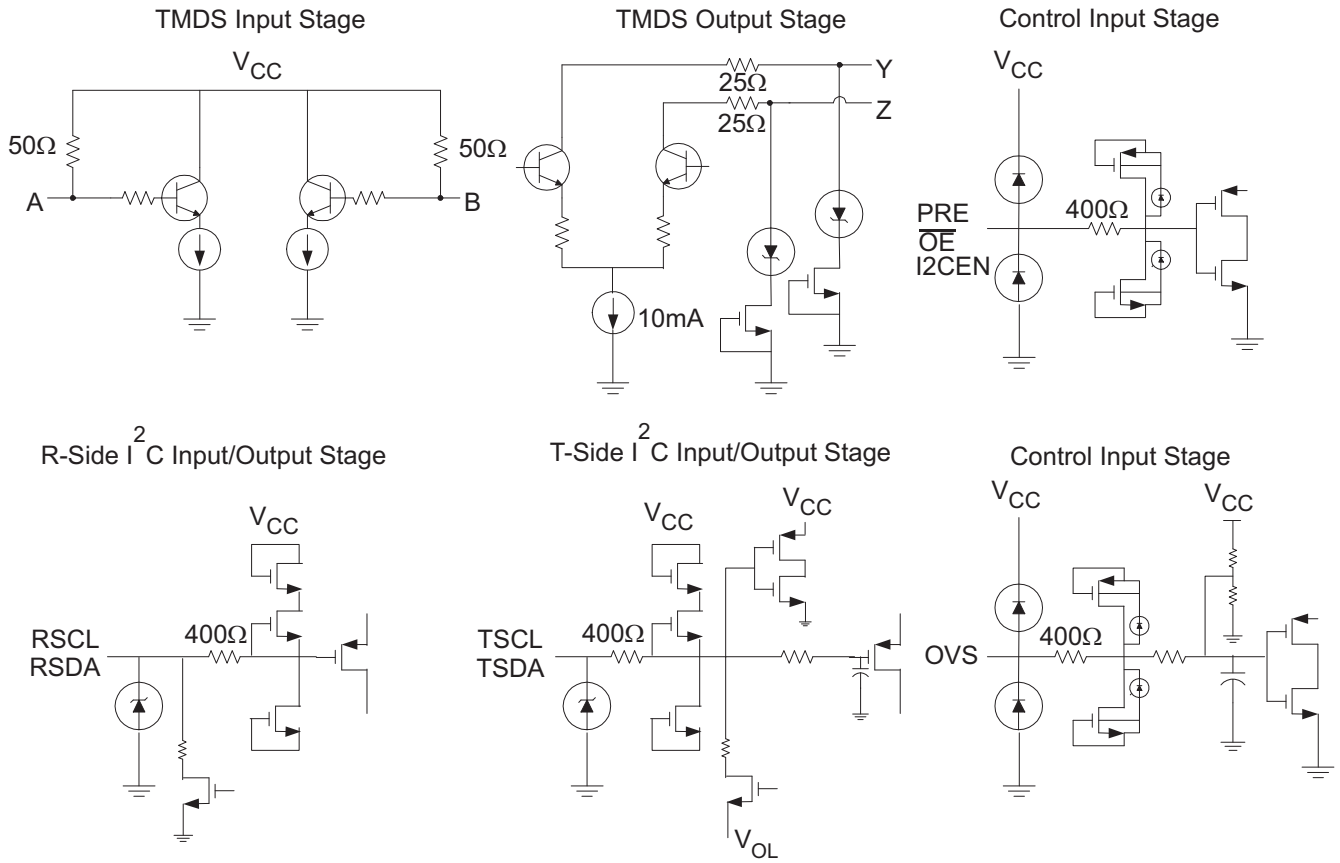

ORDERING INFORMATION(1)

PART NUMBER	PART MARKING	PACKAGE
TMDS141RHAR	TMDS141	40-PIN QFN Tape/Reel

(1) For the most current package and ordering information, see the Package Option Addendum at the end of this document, or see the TI web site at www.ti.com.

Copyright © 2006–2011, Texas Instruments Incorporated

ABSOLUTE MAXIMUM RATINGS

over operating free-air temperature range (unless otherwise noted)[1]

				UNIT
V_{CC}	Supply voltage range[2]			–0.5 V to 4 V
	Voltage range	RX, $\overline{RX}$		2.0 V to 4 V
		TX, $\overline{TX}$, PRE, VSADJ, $\overline{OE}$, I2CEN, OVS, HPDn		–0.5V to 4 V
		RSCL, RSDA, TSCL, TSDA		–0.5 V to 6 V
	Electrostatic discharge	Human body model[3]	RX, $\overline{RX}$	±6 kV
			All pins	±4 kV
		Charged-device model[4] (all pins)		±1500 V
		Machine model [5] (all pins)		±200 V
	Continuous power dissipation			See Dissipation Rating Table

(1) Stresses beyond those listed under *absolute maximum ratings* may cause permanent damage to the device. These are stress ratings only and functional operation of the device at these or any other conditions beyond those indicated under *recommended operating conditions* is not implied. Exposure to absolute-maximum-rated conditions for extended periods may affect device reliability.
(2) All voltage values, except differential I/O bus voltages, are with respect to network ground terminal.
(3) Tested in accordance with JEDEC Standard 22, Test Method A114-B
(4) Tested in accordance with JEDEC Standard 22, Test Method C101-A
(5) Tested in accordance with JEDEC Standard 22, Test Method A115-A

DISSIPATION RATINGS

PACKAGE	PCB JEDEC STANDARD	$T_A \leq 25°C$	DERATING FACTOR [1] ABOVE $T_A = 25°C$	$T_A = 70°C$ POWER RATING
40-QFN RHA	Low-K[2]	839.7 mW	8.39 mW/°C	461.8 mW
40-QFN RHA	High-K[3]	3030.3 mW	30.3 mW/°C	1666.6mW

(1) This is the inverse of the junction-to-ambient thermal resistance when board-mounted and with no air flow.
(2) In accordance with the Low-K thermal metric definitions of EIA/JESD51-3
(3) In accordance with the High-K thermal metric definitions of EIA/JESD51-7

THERMAL CHARACTERISTICS

over operating free-air temperature range (unless otherwise noted)

PARAMETER		TEST CONDITIONS		MIN	TYP	MAX	UNIT
$R_{\theta JB}$	Junction-to-board thermal resistance				30.96		°C/W
$R_{\theta JC}$	Junction- to-case thermal resistance				32.42		°C/W
P_D	Device power dissipation	$V_{IH} = V_{CC}$, $V_{IL} = V_{CC}$ - 0.5 V, R_T = 50 Ω, $V_{CC} = AV_{CC}$ = 3.3V, R_{vsadj} = 4.64 kΩ	PRE = Low		344	370	mW
			PRE = High		381	407	
		$V_{IH} = V_{CC}$, $V_{IL} = V_{CC}$ - 0.6 V, R_T = 50 Ω, V_{CC} = 3.6 V, AV_{CC} = 3.3V, R_{vsadj} = 4.6 kΩ	PRE = Low			484	mW
			PRE = High			526	

Copyright © 2006–2011, Texas Instruments Incorporated

RECOMMENDED OPERATING CONDITIONS

		MIN	NOM	MAX	UNIT
V_{CC}	Supply voltage	3	3.3	3.6	V
T_A	Operating free-air temperature	0		70	°C
TMDS DIFFERENTIAL PINS (RX/ RXC)					
V_{IC}	Input common mode voltage	V_{CC}–400		V_{CC}+10	mV
V_{ID}	Receiver peak-to-peak differential input voltage	150		1560	mVp-p
R_{VSADJ}	Resistor for TMDS compliant voltage swing range	4.6	4.64	4.68	kΩ
AV_{CC}	TMDS Output termination voltage, see Figure 2	3	3.3	3.6	V
R_T	Termination resistance, see Figure 2	45	50	55	Ω
	Signaling rate	0		2.25	Gbps
CONTROL PINS (PRE, $\overline{OE}$, I2CEN)					
V_{IH}	LVTTL High-level input voltage	2		V_{CC}	V
V_{IL}	LVTTL Low-level input voltage	GND		0.8	V
CONTROL PINS (OVS)					
V_{IH}	LVTTL High-level input voltage	3		3.6	V
V_{IL}	LVTTL Low-level input voltage	-0.5		0.5	V
I^2C PINS (TSCL, TSDA)					
V_{IH}	High-level input voltage	$0.7V_{CC}$		5.5	V
V_{IL}	Low-level input voltage	-0.5		$0.3V_{CC}$	V
V_{ICL}	Low-level input voltage contention (1)	-0.5		0.4	V
I^2C PINS (RSCL, RSDA)					
V_{IH}	High-level input voltage	2.1		5.5	V
V_{IL}	Low-level input voltage	-0.5		1.5	V

(1) V_{IL} specification is for the first low level seen by the SCL/SDA lines. V_{ICL} is for the second and subsequent low levels seen by the TSCL/TSDA lines.

Copyright © 2006–2011, Texas Instruments Incorporated

ELECTRICAL CHARACTERISTICS

over recommended operating conditions (unless otherwise noted)

PARAMETER		TEST CONDITIONS		MIN	TYP(1)	MAX	UNIT
I_{CC}	Supply current	$V_{IH} = V_{CC}$, $V_{IL} = V_{CC} - 0.4$ V, $R_T = 50\ \Omega$, $AV_{CC} = 3.3$ V, $R_{VSADJ} = 4.64$ kΩ, 1.65-Gbps HDMI data pattern, 165-MHz Pixel clock, PRE = Low			108	130(2)	mA
P_D	Power dissipation	$V_{IH} = V_{CC}$, $V_{IL} = V_{CC} - 0.4$ V, $R_T = 50\ \Omega$, $AV_{CC} = 3.3$ V, $R_{VSADJ} = 4.64$ kΩ, 1.65-Gbps HDMI data pattern, 165-MHz Pixel clock, PRE = Low				497(2)	mW
TMDS DIFFERENTIAL PINS (TX, TXC)							
V_{OH}	Single-ended high-level output voltage	See Figure 3, $AV_{CC} = 3.3$ V, $R_T = 50\ \Omega$		AV_{CC}–10		AV_{CC}+10	mV
V_{OL}	Single-ended low-level output voltage			AV_{CC}–600		AV_{CC}–400	mV
V_{swing}	Single-ended output swing voltage			400		600	mV
$V_{OD(O)}$	Overshoot of output differential voltage					15%	2× V_{swing}
$V_{OD(U)}$	Undershoot of output differential voltage					25%	2× V_{swing}
$\Delta V_{OC(SS)}$	Change in steady-state common-mode output voltage between logic states					5	mV
$I_{(O)OFF}$	Single-ended standby output current	0 V ≤ V_{CC} ≤ 1.5 V, $AV_{CC} = 3.3$ V, $R_T = 50\ \Omega$		–10		10	µA
$V_{OD(pp)}$	Peak-to-peak output differential voltage	See Figure 4, PRE = High, $AV_{CC} = 3.3$ V, $R_T = 50\ \Omega$		800		1200	mVp-p
$V_{ODE(SS)}$	Steady state output differential voltage with de-emphasis			600		820	
$I_{(OS)}$	Short circuit output current	See Figure 5		-12		12	mA
$V_{I(open)}$	Single-ended input voltage under high impedance input or open input	$I_I = 10$ µA		V_{CC}–10		V_{CC}+10	mV
R_{INT}	Input termination resistance	$V_{IN} = 2.9$ V		45	50	55	Ω
CONTROL PINS (PRE, $\overline{OE}$, I2CEN, OVS)							
$\lvert I_{IH}\rvert$	High-level digital input current	$V_{IH} = 2$ V or V_{CC}		-10		10	µA
$\lvert I_{IL}\rvert$	Low-level digital input current	V_{IL} = GND or 0.8 V		-10		10	µA
I^2C PINS (TSCL, TSDA)							
$\lvert I_{Ikg}\rvert$	Input leakage current	$V_I = 5.5$ V		-50		50	µA
		$V_I = V_{CC}$		-10		10	
$\lvert I_{OH}\rvert$	High-level output current	$V_O = 3.6$ V		-10		10	µA
$\lvert I_{IL}\rvert$	Low-level input current	V_{IL} = GND		-40		40	µA
V_{OL}	Low-level output voltage	I_{OL} = 400 µA or 4 mA	OVS = NC(3)	0.47		0.6	V
			OVS = GND(3)	0.6		0.75	
			OVS = V_{CC} (3)	0.75		0.95	
V_{OL}-V_{ILC}	Low-level input voltage below output low-level voltage level	Ensured by design	OVS = NC(3)		70		mV
			OVS = GND(3)		220		
			OVS = V_{CC} (3)		370		
C_{IO}	Input/output capacitance	$V_I = 5.0$ V or 0 V, Freq = 100 kHz				25	pF
		$V_I = 3.0$ V or 0 V, Freq = 100 kHz				10	
I^2C PINS (RSCL, RSDA)							
$\lvert I_{Ikg}\rvert$	Input leakage current	$V_I = 5.5$ V		-50		50	µA
		$V_I = V_{CC}$		-10		10	
$\lvert I_{OH}\rvert$	High-level output current	$V_O = 3.6$ V		-10		10	µA
$\lvert I_{IL}\rvert$	Low-level input current	V_{IL} = GND		-10		10	µA
V_{OL}	Low-level output voltage	$I_{OL} = 4$ mA				0.2	V
C_I	Input capacitance	$V_I = 5.0$ V or 0 V, Freq = 100 kHz				25	pF
		$V_I = 3.0$ V or 0 V, Freq = 100 kHz				10	

(1) All typical values are at 25°C and with a 3.3-V supply.
(2) The maximum rating is characterized under 3.6 V V_{CC} and 600 mV V_{ID}.
(3) The patent of the OVS pin is filed.

Copyright © 2006–2011, Texas Instruments Incorporated

SWITCHING CHARACTERISTICS

over recommended operating conditions (unless otherwise noted)

PARAMETER		TEST CONDITIONS	MIN	TYP(1)	MAX	UNIT
TMDS DIFFERENTIAL PINS (TX/TXC)						
t_{PLH}	Propagation delay time, low-to-high-level output	See Figure 3, AV_{CC} = 3.3 V, R_T = 50 Ω	100		500	ps
t_{PHL}	Propagation delay time, high-to-low-level output		100		500	ps
t_r	Differential output signal rise time (20% - 80%)		75		240	ps
t_f	Differential output signal fall time (20% - 80%)		75		240	ps
$t_{sk(p)}$	Pulse skew ($\|t_{PHL} – t_{PLH}\|$)(2)				50	ps
$t_{sk(D)}$	Intra-pair differential skew, see Figure 6				35	ps
$t_{sk(o)}$	Inter-pair channel-to-channel output skew(3)				80	ps
$t_{sk(pp)}$	Part-to-part skew (4)				200	ps
t_{en}	Enable time	See Figure 7			10	ns
t_{dis}	Disable time				10	ns
$t_{jit(pp)}$	Peak-to-peak output jitter from TXC, residual jitter(5)	See Figure 8, RXC = 165-MHz clock, RX = 1.65-Gbps HDMI pattern, Input: 5m 28AWG HDMI cable, Output: 1m 28AWG HDMI cable, PRE = high		14	30	ps
$t_{jit(pp)}$	Peak-to-peak output jitter from TX0 - TX2, residual jitter(5)			30	88	ps
$t_{jit(pp)}$	Peak-to-peak output jitter from TXC, residual jitter(5)	See Figure 8, RXC = 225-MHz clock, RX = 2.25-Gbps HDMI pattern, Input: 5m 28AWG HDMI cable, Output: 1m 28AWG HDMI cable, PRE = high		25		ps
$t_{jit(pp)}$	Peak-to-peak output jitter from TX0 - TX2, residual jitter(5)			42	88	
I2C PINS (RSCL, RSDA, TSCL, TSDA)						
t_{PLH}	Propagation delay time, low-to-high-level output TSCL/TSDA to RSCL/RSDA	See Figure 9, OVS = NC	204		459	ns
t_{PHL}	Propagation delay time, high-to-low-level output TSCL/TSDA to RSCL/RSDA		35		120	ns
t_{PLH}	Propagation delay time, low-to-high-level output RSCL/RSDA to TSCL/TSDA		194		351	ns
t_{PHL}	Propagation delay time, high-to-low-level output RSCL/RSDA to TSCL/TSDA		35		120	ns
t_r	TSCL/TSDA Output signal rise time		500		800	ns
t_f	TSCL/TSDA Output signal fall time		30		72	ns
t_r	RSCL/RSDA Output signal rise time		796		999	ns
t_f	RSCL/RSDA Output signal fall time		20		72	ns
t_{set}	Enable to start condition	See Figure 10	100			ns
t_{hold}	Enable after stop condition		100			ns

(1) All typical values are at 25°C and with a 3.3-V supply.
(2) $t_{sk(p)}$ is the magnitude of the time difference between t_{PLH} and t_{PHL} of a specified terminal.
(3) $t_{sk(o)}$ is the magnitude of the difference in propagation delay times between any specified terminals of channel 2 to 4 of a device when inputs are tied together.
(4) $t_{sk(pp)}$ is the magnitude of the difference in propagation delay times between any specified terminals of channel 2 to 4 of two devices, or between channel 1 of two devices, when both devices operate with the same source, the same supply voltages, at the same temperature, and have identical packages and test circuits.
(5) Jitter specifications are ensured by design and characterization and measured in BER^{-12}

Copyright © 2006–2011, Texas Instruments Incorporated

PARAMETER MEASUREMENT INFORMATION

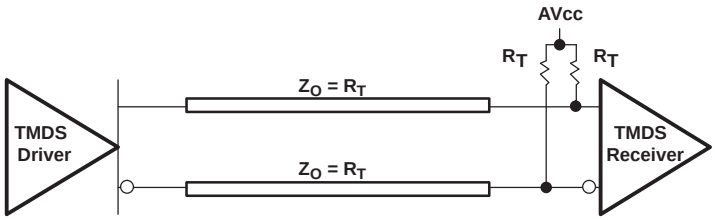

Figure 2. Typical Termination for TMDS Output Driver

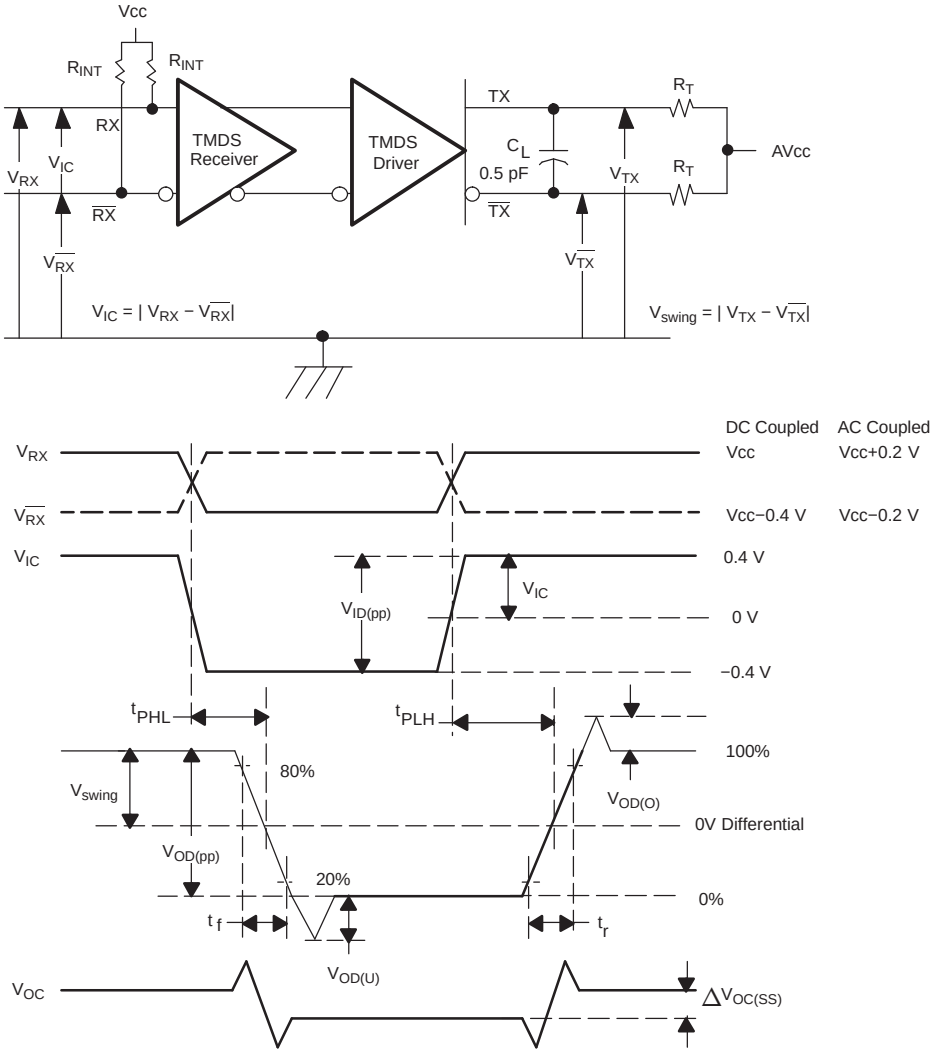

NOTE: PRE = low. All input pulses are supplied by a generator having the following characteristics: t_r or t_f < 100 ps, 100 MHz from Agilent 81250. C_L includes instrumentation and fixture capacitance within 0.06 m of the D.U.T. Measurement equipment provides a bandwidth of 20 GHz minimum.

Figure 3. TMDS Timing Test Circuit and Definitions

PARAMETER MEASUREMENT INFORMATION (continued)

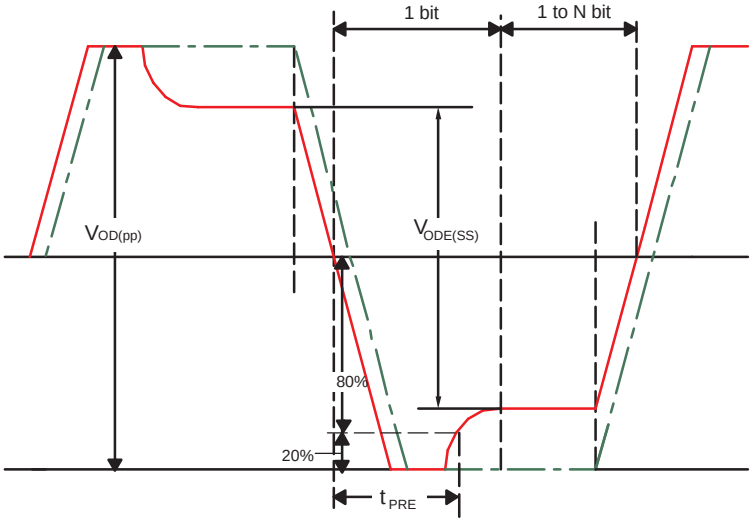

Figure 4. De-Emphasis Output Voltage Waveforms and Duration Measurement Definitions

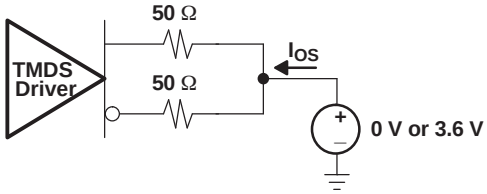

Figure 5. Short Circuit Output Current Test Circuit

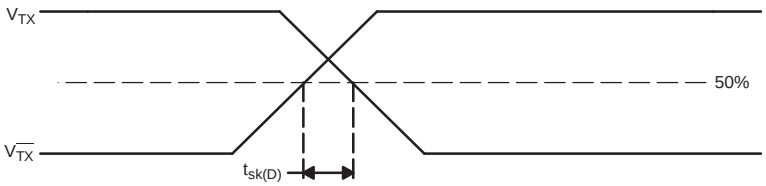

Figure 6. Definition of Intra-Pair Differential Skew

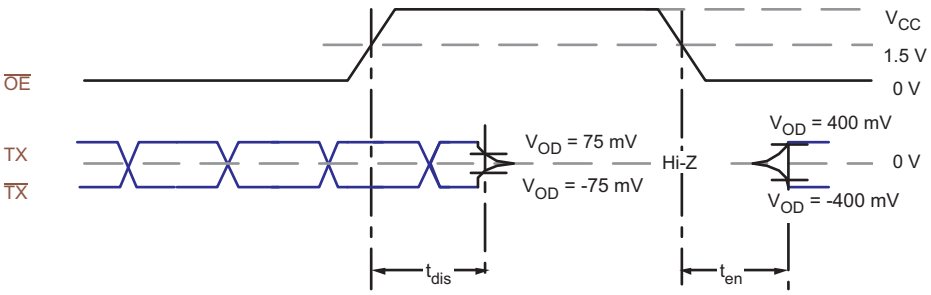

Figure 7. TMDS Enable and Disable Timing Definitions

Copyright © 2006–2011, Texas Instruments Incorporated

PARAMETER MEASUREMENT INFORMATION (continued)

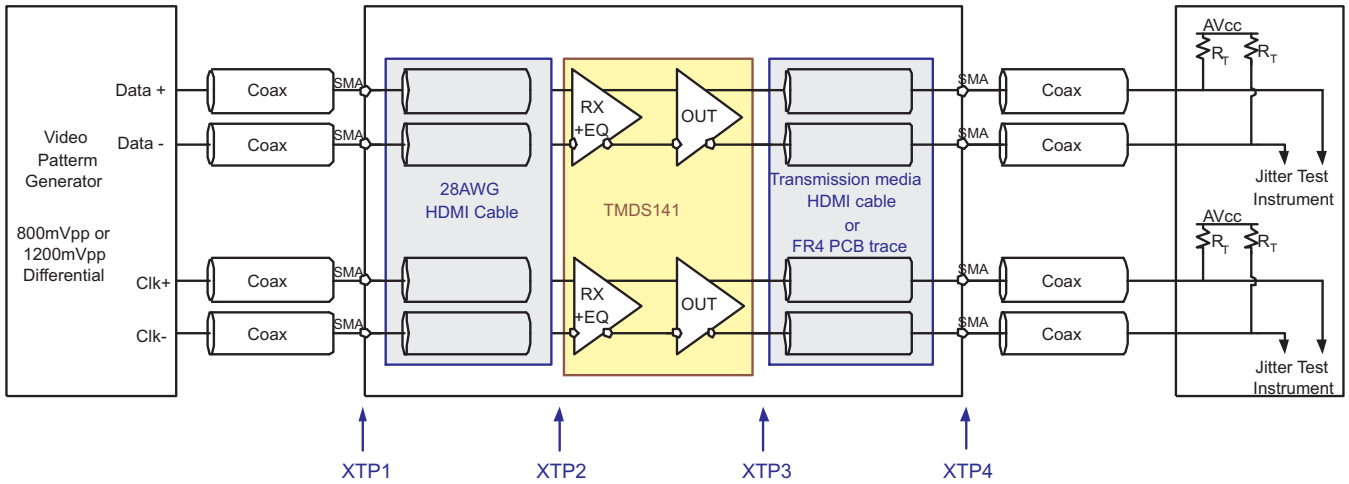

A. All jitters are measured in BER of 10^{-12}

B. The residual jitter reflects the total jitter measured at XTP4, subtract the total jitter at XTP1

Figure 8. Jitter Test Circuit

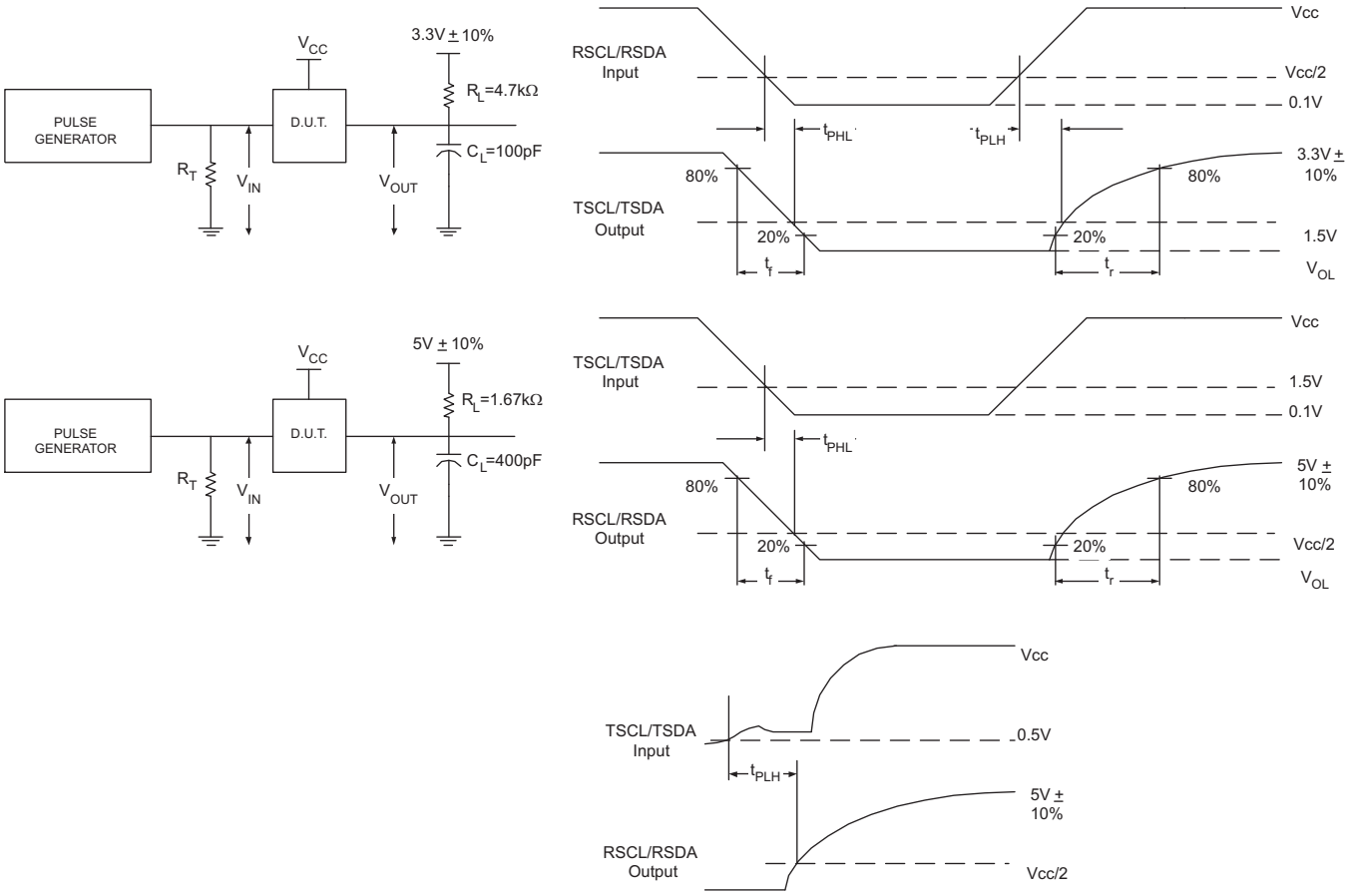

Figure 9. I²C Timing Test Circuit and Definition

PARAMETER MEASUREMENT INFORMATION (continued)

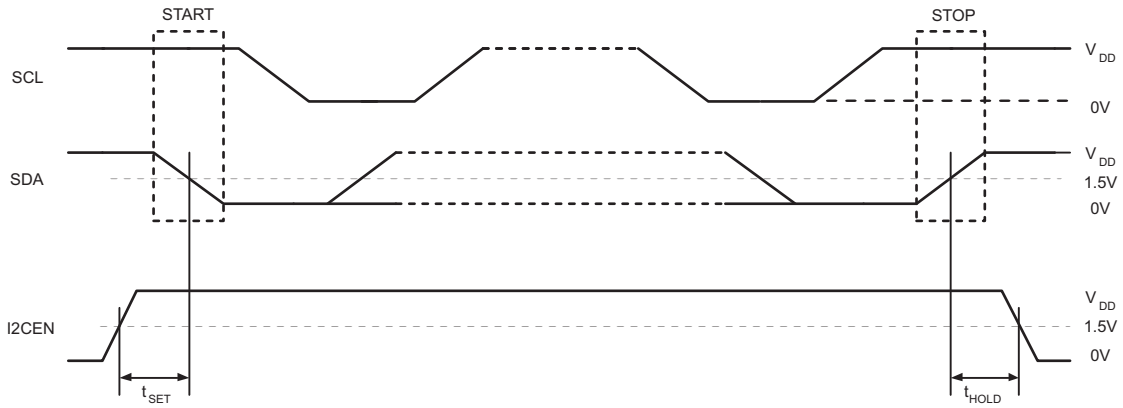

Figure 10. I²C Setup and Hold Definition

Copyright © 2006–2011, Texas Instruments Incorporated

TYPICAL CHARACTERISTICS

SUPPLY CURRENT vs FREQUENCY

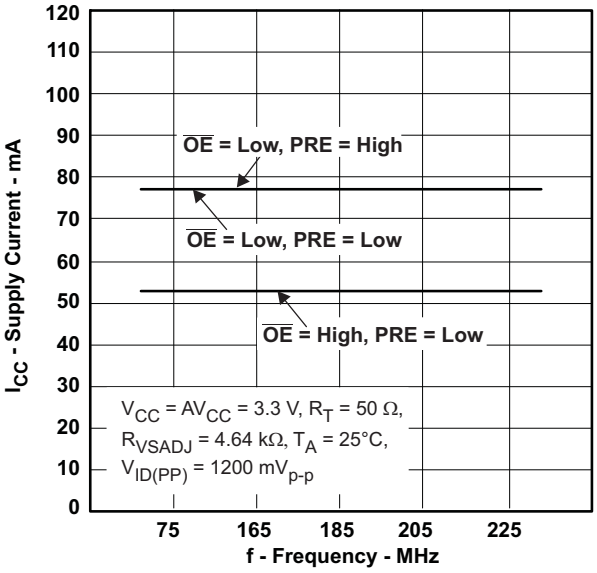

Figure 11.

SUPPLY CURRENT vs FREE-AIR TEMPERATURE

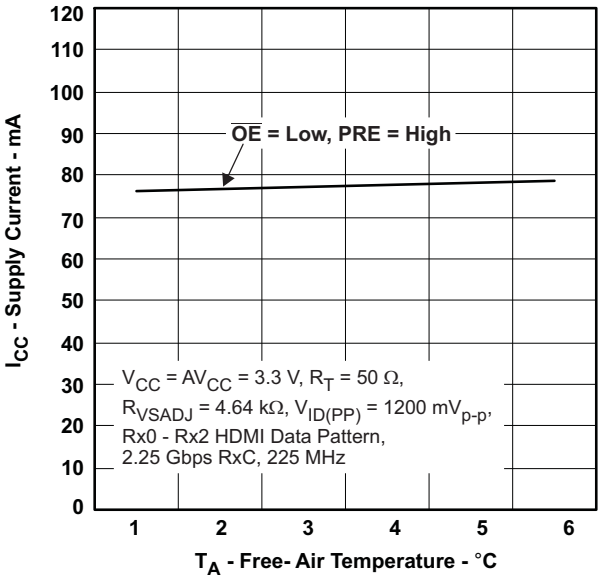

Figure 12.

RESIDUAL PEAK-TO-PEAK JITTER vs DATA RATE (DC Coupled Input: 5m 28AWG, Output: 1m 28AWG)

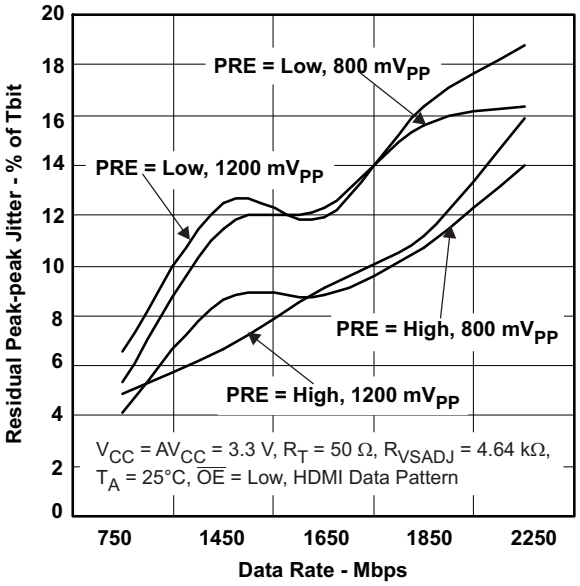

Figure 13.

RESIDUAL PEAK-TO-PEAK JITTER vs DATA RATE (DC Coupled Input: 3m 30AWG, Output: 1m 28AWG)

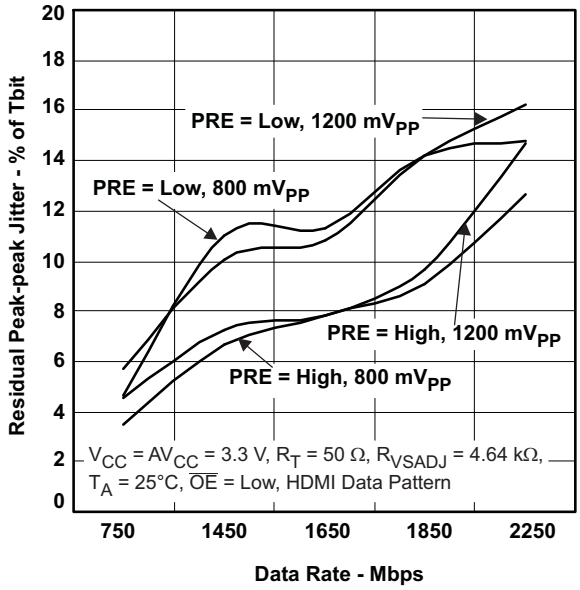

Figure 14.

TYPICAL CHARACTERISTICS (continued)

RESIDUAL PEAK-TO-PEAK JITTER vs DATA RATE (AC Coupled Input: 3m 30AWG, Output: 1m 28AWG)

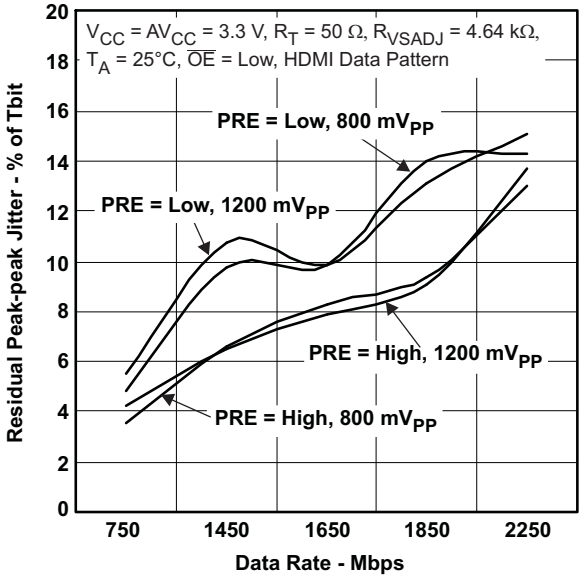

Figure 15.

RESIDUAL PEAK-TO-PEAK JITTER vs 8-MIL FR4 TRACE OUTPUT (DC Coupled Input: 5m 28AWG)

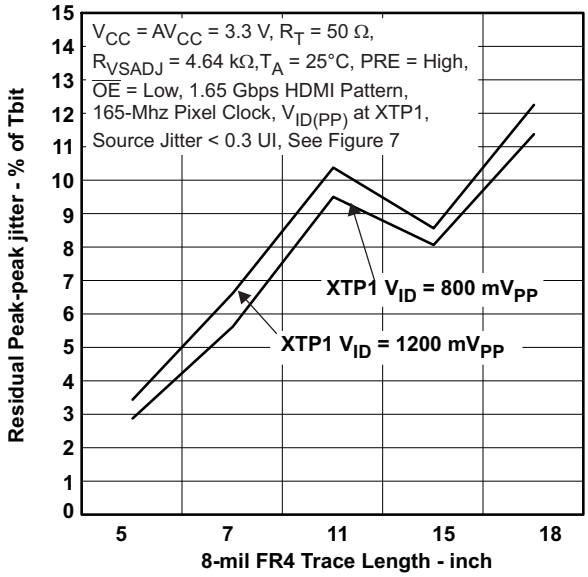

Figure 16.

RESIDUAL PEAK-TO-PEAK JITTER vs PEAK-TO-PEAK DIFFERENTIAL INPUT VOLTAGE (at XTP2)

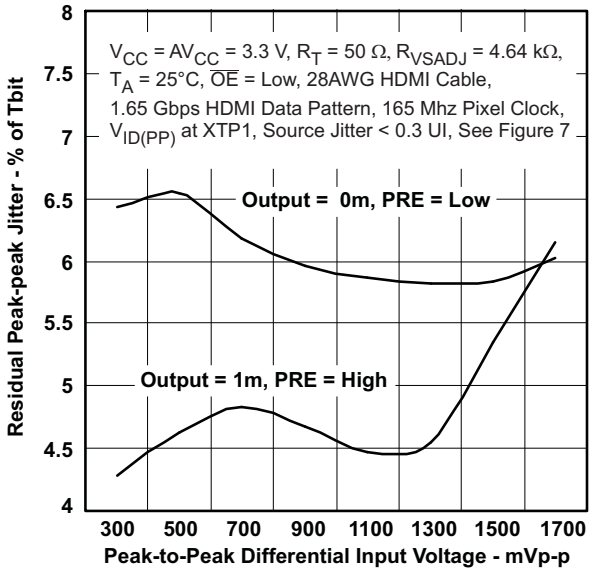

Figure 17.

Copyright © 2006–2011, Texas Instruments Incorporated

APPLICATION INFORMATION

Supply Voltage

All V_{CC} pins can be tied to a single 3.3-V power source. A 0.01-µF capacitor is connected from each V_{CC} pin directly to ground to filter supply noise.

TMDS Inputs

Standard TMDS terminations are integrated on all TMDS inputs. External terminations are not required. Each input channel contains an 8-dB equalization circuit to compensate for cable losses. The voltage at the TMDS input pins must be limited per the absolute maximum ratings. An unused input should not be connected to ground as this would result in excessive current flow damaging the device. TMDS input pins do not incorporate failsafe circuits. An unused input channel can be externally biased to prevent output oscillation. The complementary input pin is recommended to be grounded through a 1-kΩ resistor and the other pin left open.

TMDS Outputs

A 1% precision resistor, 4.64-kΩ, connected from VSADJ to ground is recommended to allow the differential output swing to comply with TMDS signal levels. The differential output driver provides a typical 10-mA current sink capability, which provides a typical 500-mV voltage drop across a 50-Ω termination resistor.

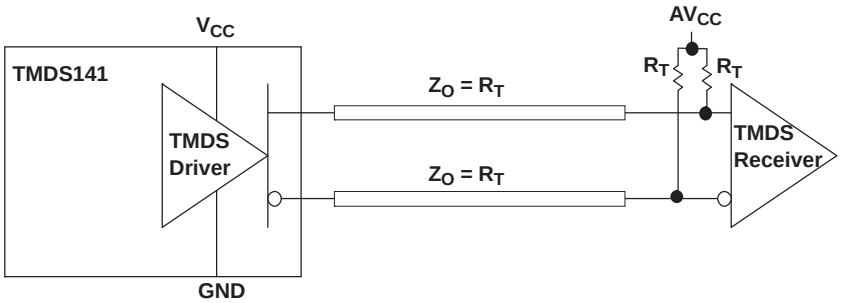

Figure 18. TMDS Driver and Termination Circuit

Referring to Figure 18, if both V_{CC} (TMDS141 supply) and AV_{CC} (sink termination supply) are both powered, the TMDS output signals is high impedance when OEB = high. Both supplies being active is the normal operating condition.

Again refer to Figure 18, if V_{CC} is on and AV_{CC} is off, the TMDS outputs source a typical 5-mA current through each termination resistor to ground. A total of 10-mW of power is consumed by the terminations independent of the OEB logical selection. When AV_{CC} is powered on, normal operation (OEB controls output impedance) is resumed.

When the power source of the device is off and the power source to termination is on, the $I_{O(off)}$, output leakage current, specification ensures the leakage current is limited 10-µA or less.

The PRE pin provides 3dB de-emphasis, allowing output signal pre-conditioning to offset interconnect losses from the TMDS141 outputs to a TMDS receiver. PRE is recommended to be set low while connecting to a receiver throw short PCB route.

I^2C Function Description

The RSCL/RSDA and TSCL/TSDA pins are 5-V tolerant when the device is powered off and high impedance under low supply voltage, 1.5 V or below. If the device is powered up and the I^2C circuits are enabled, and I2CEN = high, the driver T (see Figure 19) is turned on or off depending up on the corresponding R side voltage level.

When the R side is pulled low below 1.5 V, the corresponding T side driver turns on and pulls the T side down to a low level output voltage, V_{OL}. The value of V_{OL} depends on the input to the OVS pin. When OVS is left floating

Copyright © 2006–2011, Texas Instruments Incorporated

or not connected, V_{OL} is typically 0.5 V. When OVS is connected to GND, V_{OL} is typically 0.65 V. When OVS is connected to V_{CC}, V_{OL} is typically 0.8 V. V_{OL} is always higher than the driver R input threshold, V_{IL}, which is typically 0.4 V, preventing lockup of the repeater loop. The V_{OL} value can be selected to improve or optimize noise margins between V_{OL} and the V_{IL} of the repeater itself or the V_{IL} of some external device connected on the T side.

When the R side is pulled up, above 1.5 V, the T side driver turns off and the T side pin is high impedance.

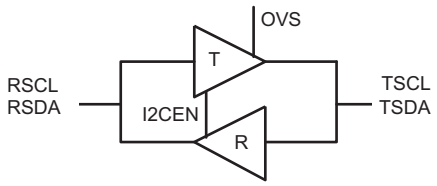

Figure 19. I²C Drivers in TMDS141

When the T side is pulled below 0.4 V by an external I²C driver, both drivers R and T are turned on. Driver R pulls the R side to near 0 V, and driver T is on, but is overridden by the external I²C driver. If driver T is already on, due to a low on the R side, driver R just turns on.

When the T side is released by the external I²C driver, driver T is still on, so the T side is only able to rise to the V_{OL} of driver T. Driver R turns off, since V_{OL} is above its 0.4-V V_{IL} threshold, releasing the R side. If no external I²C driver is keeping the R side low, the R side rises, and driver T turns off once the R side rises above 1.5 V, see Figure 20.

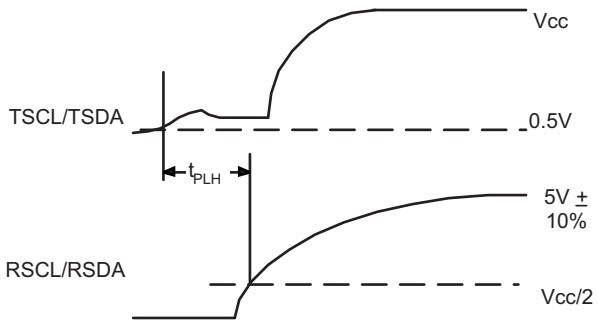

Figure 20. Waveform of Turning Driver T Off

It is important that any external I²C driver on the T side is able to pull the bus below 0.4 V to ensure full operation. If the T side cannot be pulled below 0.4 V, driver R may not recognize and transmit the low value to the R side.

I²C Enable

The I2CEN pin is active high with an internal pull-up to V_{CC}. It can be used to isolate a badly behaved slave during power up. It should never change state during an I²C operation because disabling during a bus operation may hang the bus and enabling part way through a bus cycle could confuse the I²C parts being enabled.

I²C Behavior

The typical application of the TMDS141 is as a repeater in a TV connecting the HDMI input connector and an internal HDMI Rx through flat cables. The I²C repeater is 5-V tolerant, and no additional circuitry is required to translate between 3.3-V to 5-V bus voltages. In the following example, the system master is running on an R-side I²C-bus while the slave is connected to a T-side bus. Both buses run at 100 kHz supporting standard-mode I²C operation. Master devices can be placed on either bus.

Copyright © 2006–2011, Texas Instruments Incorporated

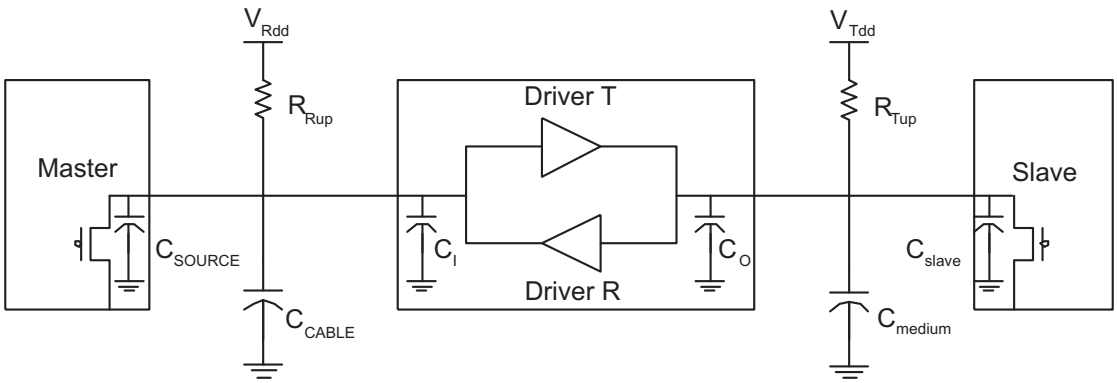

Figure 21. Typical Application

Figure 22 illustrates the waveforms seen on the R-side I²C-bus when the master writes to the slave through the I²C repeater circuit of the TMDS141. This looks like a normal I²C transmission, and the turn on and turn off of the acknowledge signals are slightly delayed.

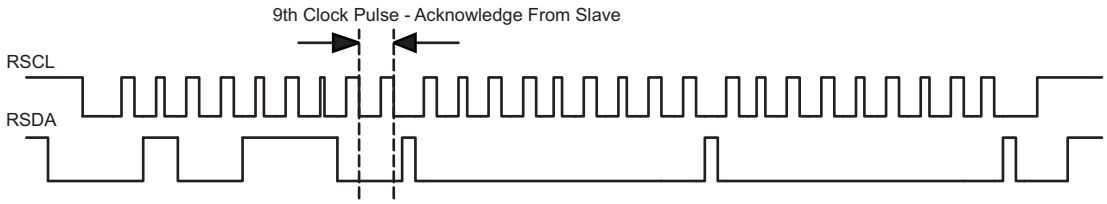

Figure 22. Bus R Waveform

Figure 23 illustrates the waveforms seen on the T-side I²C-bus under the same operation in Figure 22. On the T-side of the I²C repeater, the clock and data lines would have a positive offset from ground equal to the V_{OL} of the driver T. After the 8th clock pulse, the data line is pulled to the V_{OL} of the slave device which is very close to ground in this example. At the end of the acknowledge, the slave device releases and the bus level rises back to the V_{OL} set by the driver until the R-side rises above $V_{CC}/2$, after which it continues to high. It is important to note that any arbitration or clock stretching events require that the low level on the T-side bus at the input of the TMDS141 I²C repeater is below 0.4 V to be recognized by the device and then transmitted to the R-side I²C bus.

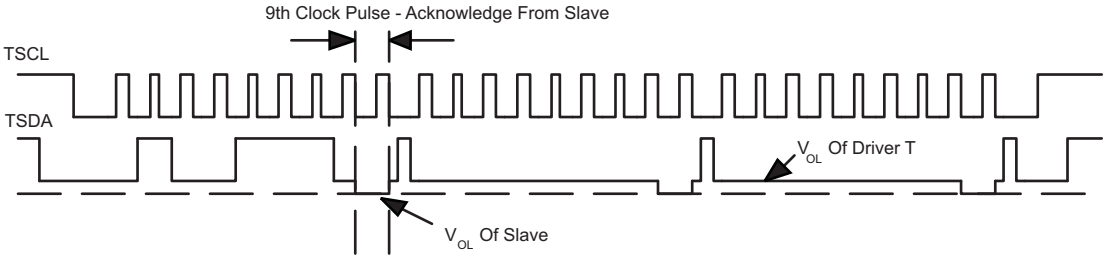

Figure 23. Bus T Waveform

The I²C circuitry inside the TMDS141 allows multiple stage operation as shown in Figure 24. I²C-Bus slave devices can be connected to any of the bus segments. The number of devices that can be connected in series is limited by repeater delay/time of flight considerations for the maximum bus speed requirements.

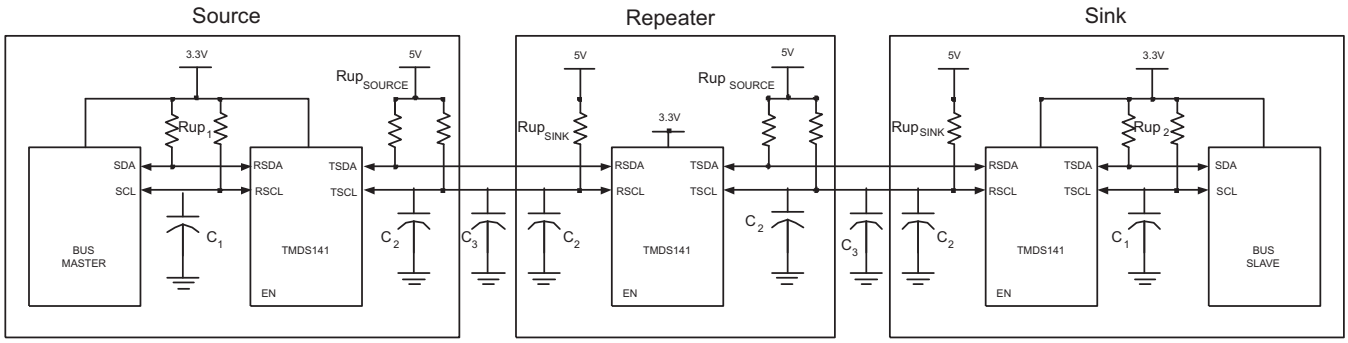

Figure 24. Typical Series Application

I²C Pull-up Resistors

The pull-up resistor value is determined by two requirements:

1. The maximum sink current of the I²C buffer:

   The maximum sink current is 3 mA or slightly higher for an I²C driver supporting standard-mode I²C operation.

   $$R_{up(min)} = V_{DD}/Isink \quad (1)$$

2. The maximum transition time on the bus:

   The maximum transition time, T, of an I²C bus is set by an RC time constant, where R is the pull-up resistor value, and C is the total load capacitance. The parameter, k, can be calculated from equation 3 by solving for t, the times at which certain voltage thresholds are reached. Different input threshold combinations introduce different values of t. Table 1 summarizes the possible values of k under different threshold combinations.

   $$T = k \times RC \quad (2)$$

   $$V(t) = V_{DD}(1 - e^{-t/RC}) \quad (3)$$

Table 1. Value k Upon Different Input Threshold Voltages

$V_{th-}\backslash V_{th+}$	$0.7V_{DD}$	$0.65V_{DD}$	$0.6V_{DD}$	$0.55V_{DD}$	$0.5V_{DD}$	$0.45V_{DD}$	$0.4V_{DD}$	$0.35V_{DD}$	$0.3V_{DD}$
$0.1V_{DD}$	1.0986	0.9445	0.8109	0.6931	0.5878	0.4925	0.4055	0.3254	0.2513
$0.15V_{DD}$	1.0415	0.8873	0.7538	0.6360	0.5306	0.4353	0.3483	0.2683	0.1942
$0.2V_{DD}$	0.9808	0.8267	0.6931	0.5754	0.4700	0.3747	0.2877	0.2076	0.1335
$0.25V_{DD}$	0.9163	0.7621	0.6286	0.5108	0.4055	0.3102	0.2231	0.1431	0.0690
$0.3V_{DD}$	0.8473	0.6931	0.5596	0.4418	0.3365	0.2412	0.1542	0.0741	-

From equation 1, $R_{up(min)}$ = 5.5V/3mA = 1.83 kΩ to operate the bus under a 5-V pull-up voltage and provide less than 3 mA when the I²C device is driving the bus to a low state. If a higher sink current, for example 4 mA, is allowed, $R_{up(min)}$ can be as low as 1.375 kΩ.

Given a 5-V I²C device with input low and high threshold voltages at 0.3 V_{dd} and 0.7 V_{dd}, the valued of k is 0.8473 from Table 1. Taking into account the 1.83-kΩ pull-up resistor, the maximum total load capacitance is $C_{(total-5V)}$ = 645 pF. $C_{cable(max)}$ should be restricted to be less than 545 pF if C_{source} and C_i can be as heavy as 50 pF. Here the C_i is treated as C_{sink}, the load capacitance of a sink device.

Fixing the maximum transition time from Table 1, T = 1 µs, and using the k values from Table 1, the recommended maximum total resistance of the pull-up resistors on an I²C bus can be calculated for different system setups.

To support the maximum load capacitance specified in the HDMI spec, $C_{cable(max)}$ = 700pF/C_{source} = 50pF/C_i = 50pF, $R_{(max)}$ can be calculated as shown in Table 2.

Copyright © 2006–2011, Texas Instruments Incorporated

Table 2. Pull-Up Resistor Upon Different Threshold Voltages and 800-pF Loads

$V_{th-}\backslash V_{th+}$	$0.7V_{DD}$	$0.65V_{DD}$	$0.6V_{DD}$	$0.55V_{DD}$	$0.5V_{DD}$	$0.45V_{DD}$	$0.4V_{DD}$	$0.35V_{DD}$	$0.3V_{DD}$	UNIT
$0.1V_{DD}$	1.14	1.32	1.54	1.80	2.13	2.54	3.08	3.84	4.97	kΩ
$0.15V_{DD}$	1.20	1.41	1.66	1.97	2.36	2.87	3.59	4.66	6.44	kΩ
$0.2V_{DD}$	1.27	1.51	1.80	2.17	2.66	3.34	4.35	6.02	9.36	kΩ
$0.25V_{DD}$	1.36	1.64	1.99	2.45	3.08	4.03	5.60	8.74	18.12	kΩ
$0.3V_{DD}$	1.48	1.80	2.23	2.83	3.72	5.18	8.11	16.87	-	kΩ

Or, limiting the maximum load capacitance of each cable to be 400 pF to accommodate with I^2C spec version 2.1. $C_{cable(max)}$ = 400pF/C_{source}=50pF/C_i = 50pF, the maximum values of $R_{(max)}$ are calculated as shown in Table 3.

Table 3. Pull-Up Resistor Upon Different Threshold Voltages and 500-pF Loads

$V_{th-}\backslash V_{th+}$	$0.7V_{DD}$	$0.65V_{DD}$	$0.6V_{DD}$	$0.55V_{DD}$	$0.5V_{DD}$	$0.45V_{DD}$	$0.4V_{DD}$	$0.35V_{DD}$	$0.3V_{DD}$	UNIT
$0.1V_{DD}$	1.82	2.12	2.47	2.89	3.40	4.06	4.93	6.15	7.96	kΩ
$0.15V_{DD}$	1.92	2.25	2.65	3.14	3.77	4.59	5.74	7.46	10.30	kΩ
$0.2V_{DD}$	2.04	2.42	2.89	3.48	4.26	5.34	6.95	9.63	14.98	kΩ
$0.25V_{DD}$	2.18	2.62	3.18	3.92	4.93	6.45	8.96	13.98	28.99	kΩ
$0.3V_{DD}$	2.36	2.89	3.57	4.53	5.94	8.29	12.97	26.99	-	kΩ

Obviously, to accommodate the 3-mA drive current specification, a narrower threshold voltage range is required to support a maximum 800-pF load capacitance for a standard-mode I^2C bus.

When the input low and high level threshold voltages, V_{th-} and V_{th+}, are 0.7 V and 1.9 V, which is 0.15 V_{DD} and 0.4 V_{DD} approximately with V_{DD} = 5 V, from Table 2, the maximum pull-up resistor is 3.59 kΩ. The allowable pull-up resistor is in the range of 1.83 kΩ and 3.59 kΩ.

Thermal Dissipation

On a high-K board – It is always recommended to solder the PowerPAD™ onto the thermal land. A thermal land is the area of solder-tinned-copper underneath the PowerPAD package. On a high-K board the TMDS141 can operate over the full temperature range by soldering the PowerPAD onto the thermal land without vias.

On a low-K board – In order for the device to operate across the temperature range on a low-K board, a 1-oz Cu trace connecting the GND pins to the thermal land must be used. A simulation shows $R_{\theta JA}$ = 100.84°C/W allowing 545 mW power dissipation at 70°C ambient temperature.

A general PCB design guide for PowerPAD packages is provided in the document SLMA002 - PowerPAD Thermally Enhanced Package.

Copyright © 2006–2011, Texas Instruments Incorporated

REVISION HISTORY

Changes from Revision A (August 2006) to Revision B	Page
• Changed Features	1
• Changed Signaling rate from 1.65 Gbps to 2.25 Gbps	6
• Added PRE = Low to supply current test conditions	7
• Added PRE = Low to power dissipation test conditions	7
• Deleted TTL high- and low-level output voltages	7
• Changed Peak-to-peak output jitter from TX0 - TX2, residual jitter from 90 to 88 ps	8
• Added Peak-to-peak output jitter from TXC, residual jitter	8
• Added Peak-to-peak output jitter from TX0 - TX2, residual jitter	8
• Changed Figure 11	13
• Changed Figure 12	13
• Changed Figure 13	13
• Changed Figure 14	13
• Changed Figure 15	14

Changes from Revision B (April 2007) to Revision C	Page
• Added Feature - Accepts AC Couple DisplayPort Dual-Mode Signals and Translates Them into a HDMI1.3a Compatable TMDS Signal	1
• Added Application - DisplayPort Level Translator	1
• Changed SWITCHING CHARACTERISTICS - $t_{sk(D)}$ max from 60 to 35 ps	8

Changes from Revision C (June 2007) to Revision D	Page
• Changed the first Features list item From: Supports 2.25 Gbps Signaling Rate for 480i/p, 720i/p, and 1080i/p Resolution to 12-Bit Color Depth To: Supports 2.25 Gbps Signaling Rate for up to 1080p Resolutions Supporting 36-bits Per Pixel for Color Depth of 12-bits Per Color	1

Copyright © 2006–2011, Texas Instruments Incorporated

PACKAGING INFORMATION

Orderable part number	Status (1)	Material type (2)	Package | Pins	Package qty | Carrier	RoHS (3)	Lead finish/ Ball material (4)	MSL rating/ Peak reflow (5)	Op temp (°C)	Part marking (6)
TMDS141RHAR	Active	Production	VQFN (RHA) | 40	2500 | LARGE T&R	Yes	NIPDAU	Level-3-260C-168 HR	0 to 70	TMDS141
TMDS141RHAR.B	Active	Production	VQFN (RHA) | 40	2500 | LARGE T&R	Yes	NIPDAU	Level-3-260C-168 HR	0 to 70	TMDS141

(1) **Status:** For more details on status, see our product life cycle.

(2) **Material type:** When designated, preproduction parts are prototypes/experimental devices, and are not yet approved or released for full production. Testing and final process, including without limitation quality assurance, reliability performance testing, and/or process qualification, may not yet be complete, and this item is subject to further changes or possible discontinuation. If available for ordering, purchases will be subject to an additional waiver at checkout, and are intended for early internal evaluation purposes only. These items are sold without warranties of any kind.

(3) **RoHS values:** Yes, No, RoHS Exempt. See the TI RoHS Statement for additional information and value definition.

(4) **Lead finish/Ball material:** Parts may have multiple material finish options. Finish options are separated by a vertical ruled line. Lead finish/Ball material values may wrap to two lines if the finish value exceeds the maximum column width.

(5) **MSL rating/Peak reflow:** The moisture sensitivity level ratings and peak solder (reflow) temperatures. In the event that a part has multiple moisture sensitivity ratings, only the lowest level per JEDEC standards is shown. Refer to the shipping label for the actual reflow temperature that will be used to mount the part to the printed circuit board.

(6) **Part marking:** There may be an additional marking, which relates to the logo, the lot trace code information, or the environmental category of the part.

Multiple part markings will be inside parentheses. Only one part marking contained in parentheses and separated by a "~" will appear on a part. If a line is indented then it is a continuation of the previous line and the two combined represent the entire part marking for that device.

Important Information and Disclaimer: The information provided on this page represents TI's knowledge and belief as of the date that it is provided. TI bases its knowledge and belief on information provided by third parties, and makes no representation or warranty as to the accuracy of such information. Efforts are underway to better integrate information from third parties. TI has taken and continues to take reasonable steps to provide representative and accurate information but may not have conducted destructive testing or chemical analysis on incoming materials and chemicals. TI and TI suppliers consider certain information to be proprietary, and thus CAS numbers and other limited information may not be available for release.

In no event shall TI's liability arising out of such information exceed the total purchase price of the TI part(s) at issue in this document sold by TI to Customer on an annual basis.

TAPE AND REEL INFORMATION

REEL DIMENSIONS

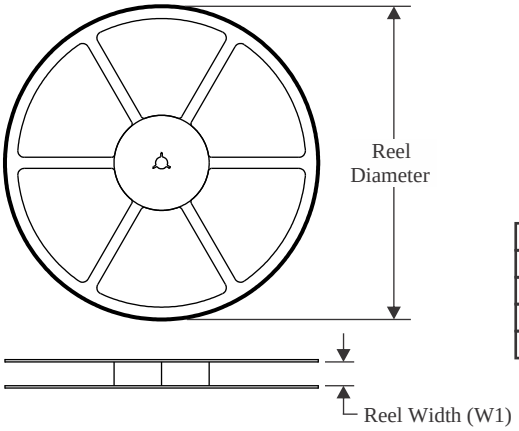

TAPE DIMENSIONS

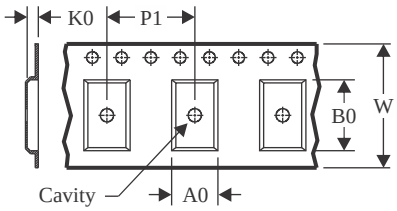

A0	Dimension designed to accommodate the component width
B0	Dimension designed to accommodate the component length
K0	Dimension designed to accommodate the component thickness
W	Overall width of the carrier tape
P1	Pitch between successive cavity centers

QUADRANT ASSIGNMENTS FOR PIN 1 ORIENTATION IN TAPE

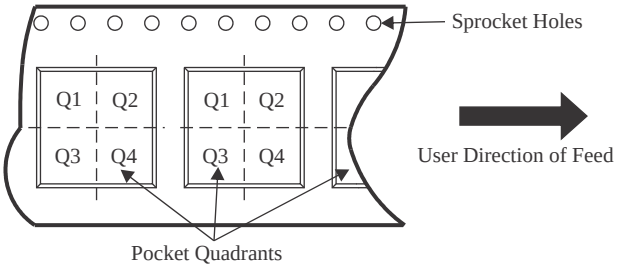

*All dimensions are nominal

Device	Package Type	Package Drawing	Pins	SPQ	Reel Diameter (mm)	Reel Width W1 (mm)	A0 (mm)	B0 (mm)	K0 (mm)	P1 (mm)	W (mm)	Pin1 Quadrant
TMDS141RHAR	VQFN	RHA	40	2500	330.0	16.4	6.3	6.3	1.1	12.0	16.0	Q2

TAPE AND REEL BOX DIMENSIONS

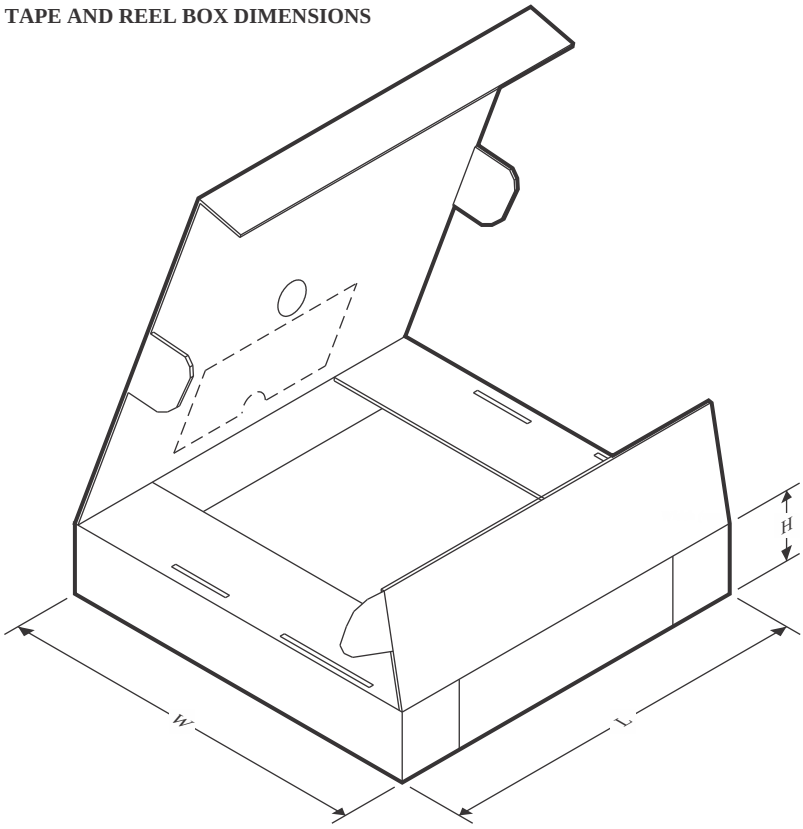

*All dimensions are nominal

Device	Package Type	Package Drawing	Pins	SPQ	Length (mm)	Width (mm)	Height (mm)
TMDS141RHAR	VQFN	RHA	40	2500	353.0	353.0	32.0

GENERIC PACKAGE VIEW

RHA 40

VQFN - 1 mm max height

6 x 6, 0.5 mm pitch

PLASTIC QUAD FLATPACK - NO LEAD

This image is a representation of the package family, actual package may vary.
Refer to the product data sheet for package details.

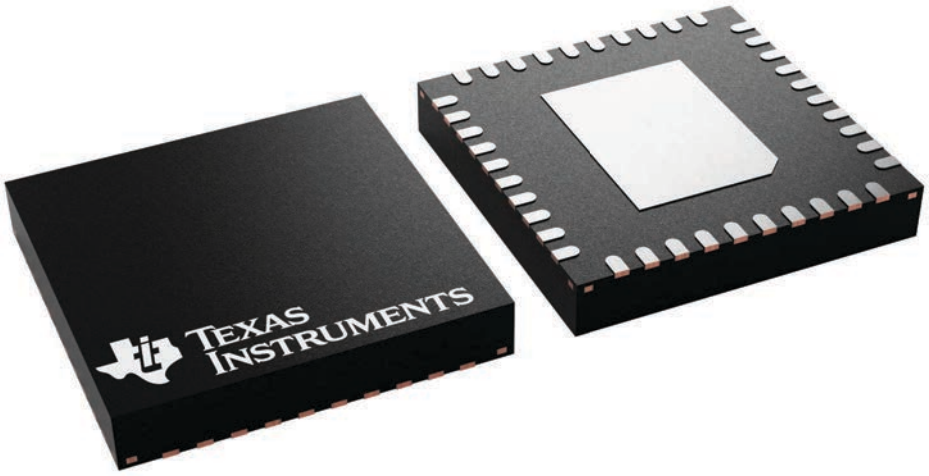

4225870/A

PACKAGE OUTLINE

RHA0040D

VQFN - 1 mm max height

PLASTIC QUAD FLATPACK - NO LEAD

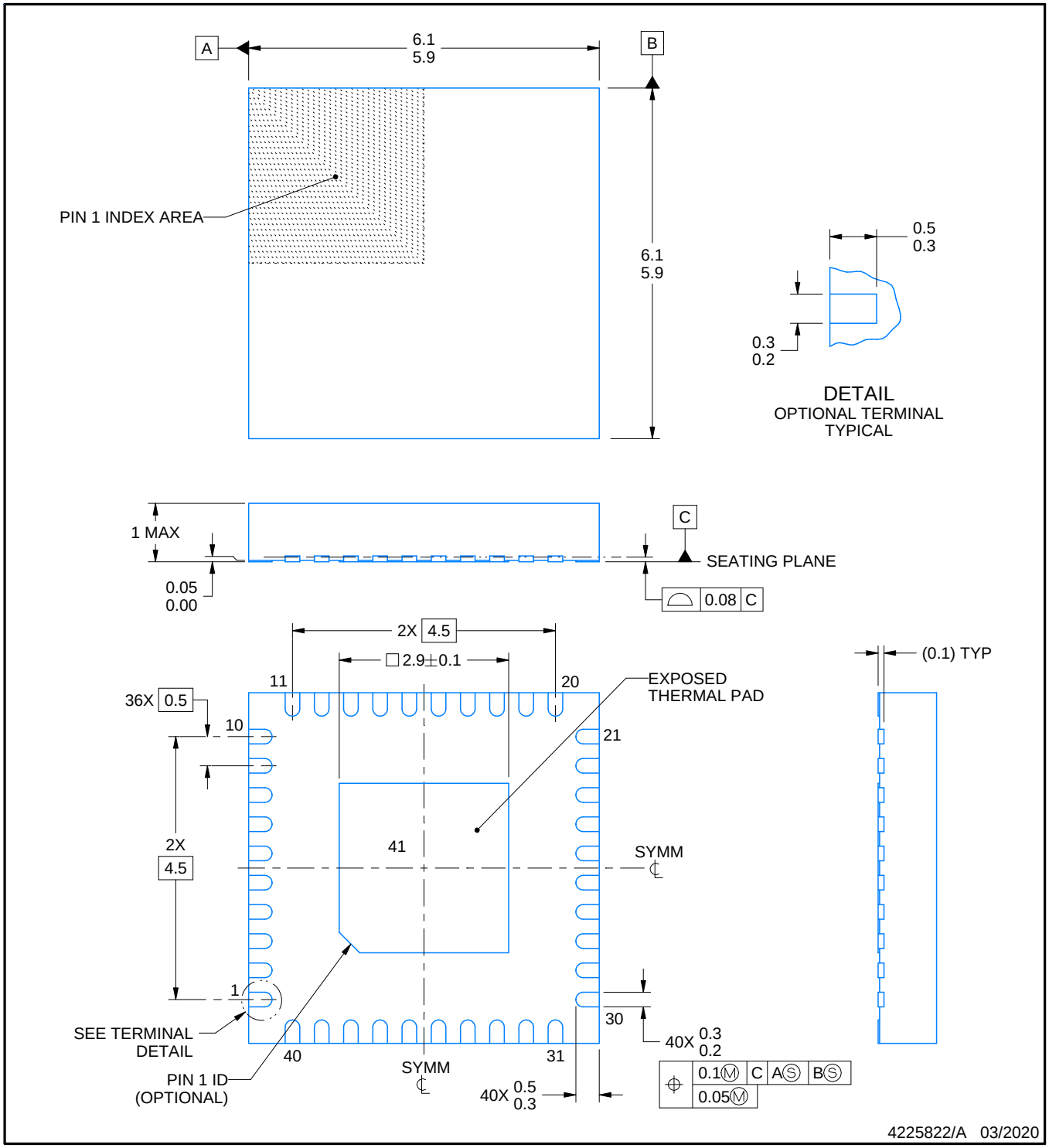

NOTES:

1. All linear dimensions are in millimeters. Any dimensions in parenthesis are for reference only. Dimensioning and tolerancing per ASME Y14.5M.
2. This drawing is subject to change without notice.
3. The package thermal pad must be soldered to the printed circuit board for thermal and mechanical performance.

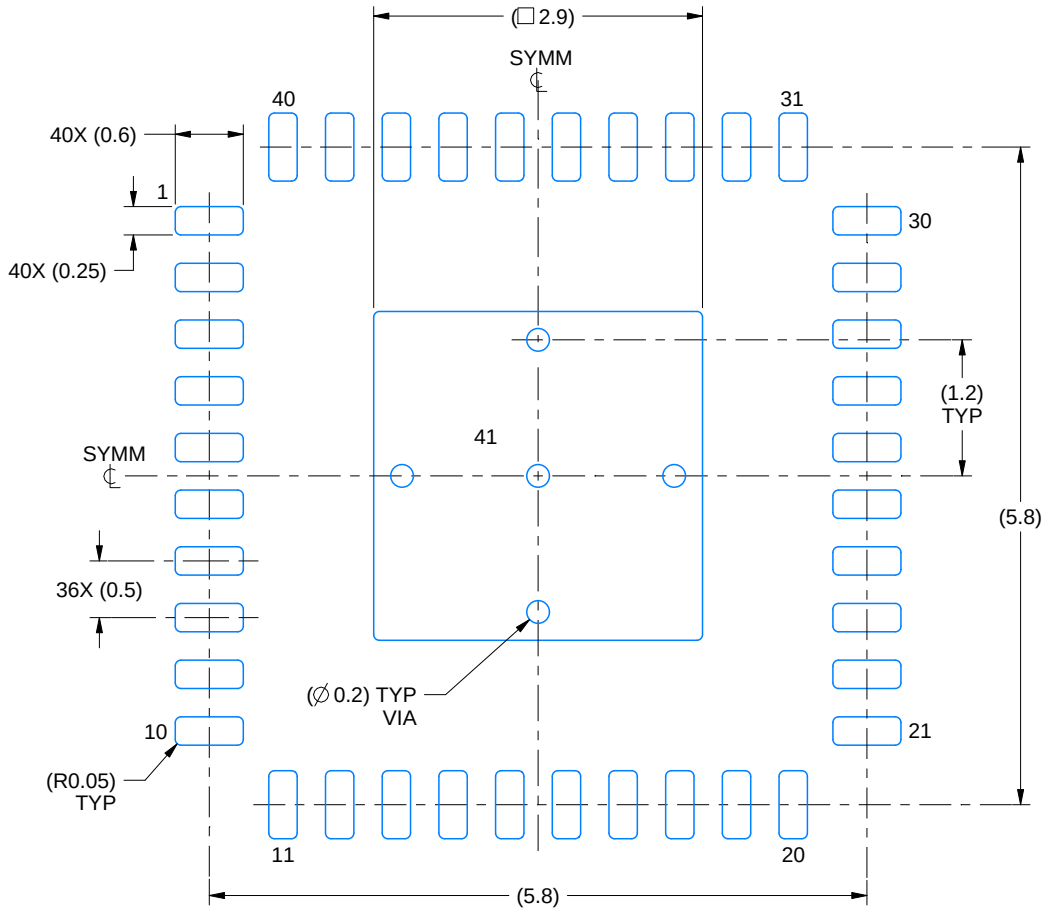

LAND PATTERN EXAMPLE
SCALE:15X

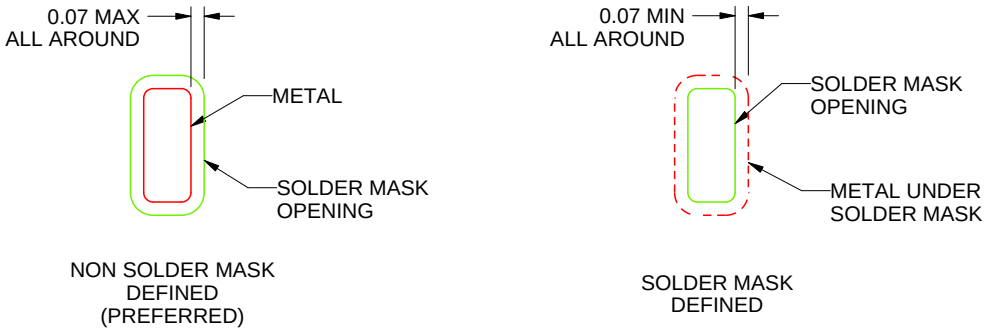

SOLDER MASK DETAILS

4225822/A 03/2020

NOTES: (continued)

4. This package is designed to be soldered to a thermal pad on the board. For more information, see Texas Instruments literature number SLUA271 (www.ti.com/lit/slua271).
5. Vias are optional depending on application, refer to device data sheet. If any vias are implemented, refer to their locations shown on this view.

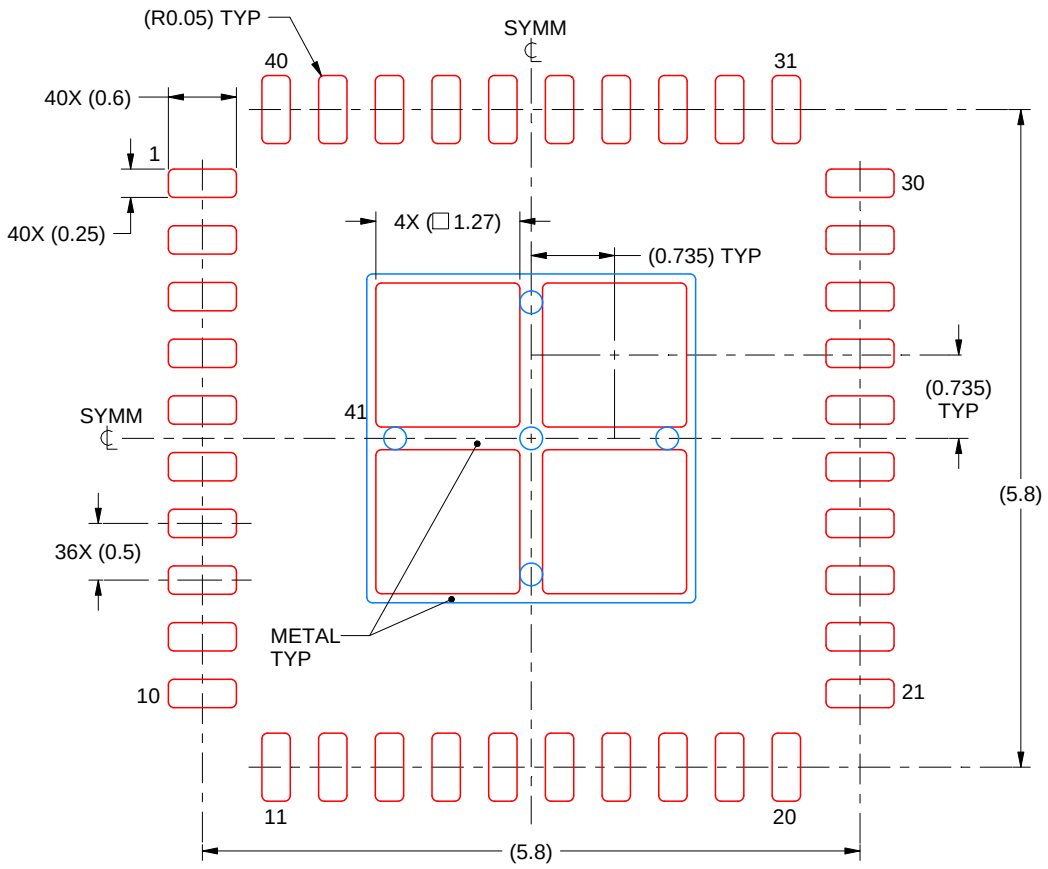

SOLDER PASTE EXAMPLE
BASED ON 0.125 mm THICK STENCIL

EXPOSED PAD 41:
76.46% PRINTED SOLDER COVERAGE BY AREA UNDER PACKAGE
SCALE:15X

4225822/A 03/2020

NOTES: (continued)

6. Laser cutting apertures with trapezoidal walls and rounded corners may offer better paste release. IPC-7525 may have alternate design recommendations.

IMPORTANT NOTICE AND DISCLAIMER

TI PROVIDES TECHNICAL AND RELIABILITY DATA (INCLUDING DATASHEETS), DESIGN RESOURCES (INCLUDING REFERENCE DESIGNS), APPLICATION OR OTHER DESIGN ADVICE, WEB TOOLS, SAFETY INFORMATION, AND OTHER RESOURCES “AS IS” AND WITH ALL FAULTS, AND DISCLAIMS ALL WARRANTIES, EXPRESS AND IMPLIED, INCLUDING WITHOUT LIMITATION ANY IMPLIED WARRANTIES OF MERCHANTABILITY, FITNESS FOR A PARTICULAR PURPOSE OR NON-INFRINGEMENT OF THIRD PARTY INTELLECTUAL PROPERTY RIGHTS.

These resources are intended for skilled developers designing with TI products. You are solely responsible for (1) selecting the appropriate TI products for your application, (2) designing, validating and testing your application, and (3) ensuring your application meets applicable standards, and any other safety, security, regulatory or other requirements.

These resources are subject to change without notice. TI grants you permission to use these resources only for development of an application that uses the TI products described in the resource. Other reproduction and display of these resources is prohibited. No license is granted to any other TI intellectual property right or to any third party intellectual property right. TI disclaims responsibility for, and you fully indemnify TI and its representatives against any claims, damages, costs, losses, and liabilities arising out of your use of these resources.

TI’s products are provided subject to TI’s Terms of Sale, TI’s General Quality Guidelines, or other applicable terms available either on ti.com or provided in conjunction with such TI products. TI’s provision of these resources does not expand or otherwise alter TI’s applicable warranties or warranty disclaimers for TI products. Unless TI explicitly designates a product as custom or customer-specified, TI products are standard, catalog, general purpose devices.

TI objects to and rejects any additional or different terms you may propose.

Copyright © 2026, Texas Instruments Incorporated

Last updated 10/2025