TMS320DM641/TMS320DM640 Video/Imaging Fixed-Point Digital Signal Processors

Data Manual

Literature Number: SPRS222F
June 2003 − Revised October 2010

PRODUCTION DATA information is current as of publication date. Products conform to specifications per the terms of Texas Instruments standard warranty. Production processing does not necessarily include testing of all parameters.

TEXAS INSTRUMENTS

This page intentionally left blank

Revision History

This data sheet revision history highlights the technical changes made to the SPRS222E device-specific data sheet to make it an SPRS222F revision.

PAGE(s) NO.	ADDS/CHANGES/DELETES
82	Added note for V_{OH} and V_{OL}.

Contents

Section — Page

1 Device Overview . . . 15
1.1 Features . . . 15
1.2 Description . . . 16
1.3 Device Characteristics . . . 18
1.4 Device Compatibility . . . 20
1.5 Functional Block Diagram . . . 20
1.6 CPU (DSP Core) Description . . . 22
1.6.1 CPU Core Registers . . . 25
1.7 Memory Map Summary . . . 28
1.7.1 L2 Architecture Expanded . . . 30
1.8 Bootmode . . . 31
1.9 Pin Assignments . . . 32
1.9.1 Pin Map . . . 32
1.9.2 Signal Groups Description . . . 36
1.9.3 Terminal Functions . . . 42
1.10 Development . . . 64
1.10.1 Development Support . . . 64
1.10.2 Device Support . . . 65
1.10.2.1 Device and Development-Support Tool Nomenclature . . . 65
1.10.2.2 Documentation Support . . . 66
1.10.2.3 Device Silicon Revision . . . 67

2 Device Configurations . . . 68
2.1 Configurations at Reset . . . 68
2.1.1 Peripheral Selection at Device Reset . . . 68
2.1.2 Device Configuration at Device Reset . . . 69
2.2 Configurations After Reset . . . 69
2.2.1 Peripheral Selection After Device Reset . . . 69
2.3 Peripheral Configuration Lock . . . 72
2.4 Device Status Register Description . . . 74
2.5 Multiplexed Pin Configurations . . . 76
2.6 Debugging Considerations . . . 77
2.7 Configuration Examples . . . 77

3 Device Operating Conditions . . . 82
3.1 Absolute Maximum Ratings Over Operating Case Temperature Range . . . 82
3.2 Recommended Operating Conditions . . . 82
3.3 Electrical Characteristics Over Recommended Ranges of Supply Voltage and Operating Case Temperature . . . 83

4 DM641/DM640 Peripheral Information and Electrical Specifications . . . 84
4.1 Parameter Information . . . 84
4.1.1 Parameter Information Device-Specific Information . . . 84
4.1.1.1 Signal Transition Levels . . . 84
4.1.1.2 Signal Transition Rates . . . 84

Section Page

4.1.1.3 AC Transient Rise/Fall Time Specifications . . . 85
4.1.1.4 Timing Parameters and Board Routing Analysis . . . 85
4.2 Recommended Clock and Control Signal Transition Behavior . . . 86
4.3 Power Supplies . . . 86
4.3.1 Power-Supply Sequencing . . . 86
4.3.2 Power-Supply Design Considerations . . . 87
4.3.3 Power-Supply Decoupling . . . 87
4.3.4 Peripheral Power-Down Operation . . . 88
4.3.5 Power-Down Modes Logic . . . 88
4.3.6 Triggering, Wake-up, and Effects . . . 89
4.3.7 C64x Power-Down Mode with an Emulator . . . 90
4.4 Enhanced Direct Memory Access (EDMA) Controller . . . 90
4.4.1 EDMA Device-Specific Information . . . 90
4.4.1.1 EDMA Channel Synchronization Events . . . 90
4.4.2 EDMA Peripheral Register Description(s) . . . 92
4.5 Interrupts . . . 95
4.5.1 Interrupt Sources and Interrupt Selector . . . 95
4.5.2 Interrupts Peripheral Register Description(s) . . . 96
4.5.3 External Interrupts Electrical Data/Timing . . . 96
4.6 Reset . . . 96
4.6.1 Reset Electrical Data/Timing . . . 97
4.7 Clock PLL . . . 99
4.7.1 Clock PLL Device-Specific Information . . . 99
4.7.2 Clock PLL Electrical Data/Timing (Input and Output Clocks) . . . 101
4.8 External Memory Interface (EMIIF) . . . 105
4.8.1 EMIF Device-Specific Information . . . 105
4.8.2 EMIF Peripheral Register Description(s) . . . 105
4.8.3 EMIF Electrical Data/Timing . . . 106
4.8.3.1 Asynchronous Memory Timing . . . 106
4.8.3.2 Programmable Synchronous Interface Timing . . . 109
4.8.3.3 Synchronous DRAM Timing . . . 113
4.8.3.4 $\overline{\text{HOLD}}$/$\overline{\text{HOLDA}}$ Timing . . . 119
4.8.3.5 BUSREQ Timing . . . 120
4.9 Multichannel Audio Serial Port (McASP0) Peripheral . . . 121
4.9.1 McASP0 Device-Specific Information . . . 121
4.9.1.1 McASP Block Diagram . . . 121
4.9.2 McASP0 Peripheral Register Description(s) . . . 123
4.9.3 McASP0 Electrical Data/Timing . . . 125
4.9.3.1 Multichannel Audio Serial Port (McASP) Timing . . . 125
4.10 Inter-Integrated Circuit (I2C) . . . 129
4.10.1 I2C Device-Specific Information . . . 129
4.10.2 I2C Peripheral Register Description(s) . . . 130
4.10.3 I2C Electrical Data/Timing . . . 131
4.10.3.1 Inter-Integrated Circuits (I2C) Timing . . . 131
4.11 Host-Port Interface (HPI) [DM641 Only] . . . 133
4.11.1 HPI Peripheral Register Description(s) [DM641 Only] . . . 133
4.11.2 Host-Port Interface (HPI) Electrical Data/Timing [DM641 Only] . . . 133

Section Page

4.12 Multichannel Buffered Serial Port (McBSP) . . . 137
4.12.1 McBSP Peripheral Register Description(s) . . . 137
4.12.2 McBSP Electrical Data/Timing . . . 139
4.12.2.1 Multichannel Buffered Serial Port (McBSP) Timing . . . 139
4.13 Video Port . . . 146
4.13.1 Video Port Device-Specific Information . . . 146
4.13.2 Video Port Peripheral Register Description(s) . . . 146
4.13.3 Video Port (VP0 [DM641/DM640], VP1 [DM641 Only]) Electrical Data/Timing . . . 149
4.13.3.1 VCLKIN Timing (Video Capture Mode) . . . 149
4.13.3.2 Video Data and Control Timing (Video Capture Mode) . . . 150
4.13.3.3 VCLKIN Timing (Video Display Mode) . . . 151
4.13.3.4 Video Control Input/Output and Video Display Data Output Timing With Respect to VPxCLKINx and VPxCLKOUTx (Video Display Mode) . . . 151
4.13.3.5 Video Dual-Display Sync Mode Timing (With Respect to VPxCLKINx) . . . 153
4.14 VCXO Interpolated Control (VIC) . . . 154
4.14.1 VIC Device-Specific Information . . . 154
4.14.2 VIC Peripheral Register Description(s) . . . 154
4.14.3 VIC Electrical Data/Timing . . . 155
4.14.3.1 STCLK Timing . . . 155
4.15 Ethernet Media Access Controller (EMAC) . . . 156
4.15.1 EMAC Device-Specific Information . . . 156
4.15.2 EMAC Peripheral Register Description(s) . . . 156
4.15.3 EMAC Electrical Data/Timing . . . 160
4.16 Management Data Input/Output (MDIO) . . . 162
4.16.1 Device-Specific Information . . . 162
4.16.2 Peripheral Register Description(s) . . . 162
4.16.3 Management Data Input/Output (MDIO) Electrical Data/Timing . . . 163
4.17 Timer . . . 164
4.17.1 Timer Device-Specific Information . . . 164
4.17.2 Timer Peripheral Register Description(s) . . . 164
4.17.3 Timer Electrical Data/Timing . . . 165
4.18 General-Purpose Input/Output (GPIO) . . . 166
4.18.1 GPIO Device-Specific Information . . . 166
4.18.2 GPIO Peripheral Register Description(s) . . . 167
4.18.3 General-Purpose Input/Output (GPIO) Electrical Data/Timing . . . 167
4.19 JTAG . . . 168
4.19.1 JTAG Device-Specific Information . . . 168
4.19.1.1 IEEE 1149.1 JTAG Compatibility Statement . . . 168
4.19.1.2 JTAG ID Register Description . . . 168
4.19.2 JTAG Peripheral Register Description(s) . . . 169
4.19.3 JTAG Test-Port Electrical Data/Timing . . . 169

5 Mechanical Data . . . 170
5.1 Thermal Data . . . 170

List of Figures

Figure		Page
1−1	Functional Block Diagram	21
1−2	TMS320C64x CPU (DSP Core) Data Paths	24
1−3	TMS320DM641/DM640 L2 Architecture Memory Configuration	30
1−4	DM641/DM640 Pin Map [Quadrant A]	32
1−5	CPU and Peripheral Signals	36
1−6	Peripheral Signals	37
1−7	TMS320DM64x DSP Device Nomenclature (Including the DM641 and DM640 Devices)	66
2−1	Peripheral Configuration Register (PERCFG) [Address Location: 0x01B3F000 − 0x01B3F003]	70
2−2	VP1, VP0, McBSP1, and McBSP0 Pin Muxing	71
2−3	Peripheral Enable/Disable Flow Diagram	72
2−4	PCFGLOCK Register Diagram [Address Location: 0x01B3 F018] − Read/Write Accesses	73
2−5	Device Status Register (DEVSTAT) Description − 0x01B3 F004	74
2−6	Configuration Example A for DM641 (2 8-Bit Video Ports + 1 McASP0 + VIC + I2C0 + EMIF)	78
2−7	Configuration Example B for DM641 (1 McASP0 + 2 McBSPs + VIC + I2C0 + EMIF)	79
2−8	Configuration Example A for DM640 (1 8-Bit Video Port + 1 McASP0 + VIC + I2C0 + EMIF)	80
2−9	Configuration Example B for DM640 (1 McASP0 + 2 McBSPs + VIC + I2C0 + EMIF)	81
4−1	Test Load Circuit for AC Timing Measurements	84
4−2	Input and Output Voltage Reference Levels for AC Timing Measurements	84
4−3	Rise and Fall Transition Time Voltage Reference Levels	84
4−4	AC Transient Specification Rise Time	85
4−5	AC Transient Specification Fall Time	85
4−6	Board-Level Input/Output Timings	86
4−7	Schottky Diode Diagram	87
4−8	Power-Down Mode Logic	88
4−9	PWRD Field of the CSR Register	89
4−10	External/NMI Interrupt Timing	96
4−11	Reset Timing	98
4−12	External PLL Circuitry for Either PLL Multiply Modes or x1 (Bypass) Mode	100
4−13	CLKIN Timing	102
4−14	CLKOUT4 Timing	102
4−15	CLKOUT6 Timing	103
4−16	AECLKIN Timing for EMIFA	103
4−17	AECLKOUT1 Timing for the EMIFA Module	104
4−18	AECLKOUT2 Timing for the EMIFA Module	104
4−19	Asynchronous Memory Read Timing for EMIFA	107
4−20	Asynchronous Memory Write Timing for EMIFA	108
4−21	Programmable Synchronous Interface Read Timing for EMIFA (With Read Latency = 2)	110

Figure		Page
4−22	Programmable Synchronous Interface Write Timing for EMIFA (With Write Latency = 0)	111
4−23	Programmable Synchronous Interface Write Timing for EMIFA (With Write Latency = 1)	112
4−24	SDRAM Read Command (CAS Latency 3) for EMIFA	114
4−25	SDRAM Write Command for EMIFA	115
4−26	SDRAM ACTV Command for EMIFA	116
4−27	SDRAM DCAB Command for EMIFA	116
4−28	SDRAM DEAC Command for EMIFA	117
4−29	SDRAM REFR Command for EMIFA	117
4−30	SDRAM MRS Command for EMIFA	118
4−31	SDRAM Self-Refresh Timing for EMIFA	118
4−32	$\overline{\text{HOLD}}$/$\overline{\text{HOLDA}}$ Timing for EMIFA	119
4−33	BUSREQ Timing for EMIFA	120
4−34	McASP0 Configuration	122
4−35	McASP Input Timings	127
4−36	McASP Output Timings	128
4−37	I2C0 Module Block Diagram	129
4−38	I2C Receive Timings	131
4−39	I2C Transmit Timings	132
4−40	HPI16 Read Timing ($\overline{\text{HAS}}$ Not Used, Tied High) [DM641 Only]	134
4−41	HPI16 Read Timing ($\overline{\text{HAS}}$ Used) [DM641 Only]	135
4−42	HPI16 Write Timing ($\overline{\text{HAS}}$ Not Used, Tied High) [DM641 Only]	135
4−43	HPI16 Write Timing ($\overline{\text{HAS}}$ Used) [DM641 Only]	136
4−44	McBSP Timing	141
4−45	FSR Timing When GSYNC = 1	141
4−46	McBSP Timing as SPI Master or Slave: CLKSTP = 10b, CLKXP = 0	142
4−47	McBSP Timing as SPI Master or Slave: CLKSTP = 11b, CLKXP = 0	143
4−48	McBSP Timing as SPI Master or Slave: CLKSTP = 10b, CLKXP = 1	144
4−49	McBSP Timing as SPI Master or Slave: CLKSTP = 11b, CLKXP = 1	145
4−50	Video Port Capture VPxCLKINx TIming	149
4−51	Video Port Capture Data and Control Input Timing	150
4−52	Video Port Display VPxCLKINx Timing	151
4−53	Video Port Display Data Output Timing and Control Input/Output Timing With Respect to VPxCLKINx and VPxCLKOUTx	152
4−54	Video Port Dual-Display Sync Timing	153
4−55	STCLK Timing	155
4−56	MRCLK Timing (EMAC − Receive)	160
4−57	MTCLK Timing (EMAC − Transmit)	160
4−58	EMAC Receive Interface Timing	161
4−59	EMAC Transmit Interface Timing	161
4−60	MDIO Input Timing	163
4−61	MDIO Output Timing	163
4−62	Timer Timing	165

Figure *Page*

4−63 GPIO Enable Register (GPEN) [Hex Address: 01B0 0000] 166
4−64 GPIO Direction Register (GPDIR) [Hex Address: 01B0 0004] 166
4−65 GPIO Port Timing 167
4−66 JTAG ID Register Description − TMS320DM641/DM640 Register Value − 0x0007 902F 168
4−67 JTAG Test-Port Timing 169

List of Tables

Table		Page
1−1	Characteristics of the DM641 Processor	18
1−2	Characteristics of the DM640 Processor	19
1−3	Peripherals Available on the DM641 and DM640 Devices	20
1−4	L2 Cache Registers (C64x)	25
1−5	TMS320DM641/DM640 Memory Map Summary	28
1−6	Terminal Functions	43
2−1	MAC_EN Peripheral Selection (EMAC and MDIO)	68
2−2	DM641/DM640 Device Configuration Pins (TOUT1/LENDIAN, AEA[22:19], and TOUT0/MAC_EN)	69
2−3	Peripheral Configuration (PERCFG) Register Selection Bit Descriptions	70
2−4	PCFGLOCK Register Selection Bit Descriptions − Read Accesses	73
2−5	PCFGLOCK Register Selection Bit Descriptions − Write Accesses	73
2−6	Device Status (DEVSTAT) Register Selection Bit Descriptions	74
2−7	DM641/DM640 Device Multiplexed Pin Configurations	76
4−1	Board-Level Timing Example	86
4−2	Characteristics of the Power-Down Modes	90
4−3	TMS320DM641/DM640 EDMA Channel Synchronization Events	91
4−4	EDMA Registers (C64x)	92
4−5	Quick DMA (QDMA) and Pseudo Registers	93
4−6	EDMA Parameter RAM (C64x)	94
4−7	DM641/DM640 DSP Interrupts	95
4−8	Interrupt Selector Registers (C64x)	96
4−9	Timing Requirements for External Interrupts	96
4−10	Timing Requirements for Reset	97
4−11	Switching Characteristics Over Recommended Operating Conditions During Reset	97
4−12	TMS320DM641/DM640 PLL Multiply Factor Options, Clock Frequency Ranges, and Typical Lock Time	101
4−13	Timing Requirements for CLKIN for −400 Devices	101
4−14	Timing Requirements for CLKIN for −500 Devices	101
4−15	Timing Requirements for CLKIN for −600 Devices	102
4−16	Switching Characteristics Over Recommended Operating Conditions for CLKOUT4	102
4−17	Switching Characteristics Over Recommended Operating Conditions for CLKOUT6	103
4−18	Timing Requirements for AECLKIN for EMIFA	103
4−19	Switching Characteristics Over Recommended Operating Conditions for AECLKOUT1 for the EMIFA Module	104
4−20	Switching Characteristics Over Recommended Operating Conditions for AECLKOUT2 for the EMIFA Module	104
4−21	EMIFA Registers	105
4−22	Timing Requirements for Asynchronous Memory Cycles for EMIFA Module	106
4−23	Switching Characteristics Over Recommended Operating Conditions for Asynchronous Memory Cycles for EMIFA Module	106
4−24	Timing Requirements for Programmable Synchronous Interface Cycles for EMIFA Module	109
4−25	Switching Characteristics Over Recommended Operating Conditions for Programmable Synchronous Interface Cycles for EMIFA Module	109

Table		Page
4−26	Timing Requirements for Synchronous DRAM Cycles for EMIFA Module	113
4−27	Switching Characteristics Over Recommended Operating Conditions for Synchronous DRAM Cycles for EMIFA Module	113
4−28	Timing Requirements for the $\overline{\text{HOLD}}$/$\overline{\text{HOLDA}}$ Cycles for EMIFA Module	119
4−29	Switching Characteristics Over Recommended Operating Conditions for the $\overline{\text{HOLD}}$/$\overline{\text{HOLDA}}$ Cycles for EMIFA Module	119
4−30	Switching Characteristics Over Recommended Operating Conditions for the BUSREQ Cycles for EMIFA Module	120
4−31	McASP0 Control Registers	123
4−32	McASP0 Data Registers	125
4−33	Timing Requirements for McASP	125
4−34	Switching Characteristics Over Recommended Operating Conditions for McASP	126
4−35	I2C0 Registers	130
4−36	Timing Requirements for I2C Timings	131
4−37	Switching Characteristics for I2C Timings	132
4−38	HPI Registers [DM641 Only]	133
4−39	Timing Requirements for Host-Port Interface Cycles [DM641 Only]	133
4−40	Switching Characteristics Over Recommended Operating Conditions During Host-Port Interface Cycles [DM641 Only]	134
4−41	McBSP 0 Registers	137
4−42	McBSP 1 Registers	138
4−43	Timing Requirements for McBSP	139
4−44	Switching Characteristics Over Recommended Operating Conditions for McBSP	140
4−45	Timing Requirements for FSR When GSYNC = 1	141
4−46	Timing Requirements for McBSP as SPI Master or Slave: CLKSTP = 10b, CLKXP = 0	142
4−47	Switching Characteristics Over Recommended Operating Conditions for McBSP as SPI Master or Slave: CLKSTP = 10b, CLKXP = 0	142
4−48	Timing Requirements for McBSP as SPI Master or Slave: CLKSTP = 11b, CLKXP = 0	143
4−49	Switching Characteristics Over Recommended Operating Conditions for McBSP as SPI Master or Slave: CLKSTP = 11b, CLKXP = 0	143
4−50	Timing Requirements for McBSP as SPI Master or Slave: CLKSTP = 10b, CLKXP = 1	144
4−51	Switching Characteristics Over Recommended Operating Conditions for McBSP as SPI Master or Slave: CLKSTP = 10b, CLKXP = 1	144
4−52	Timing Requirements for McBSP as SPI Master or Slave: CLKSTP = 11b, CLKXP = 1	145
4−53	Switching Characteristics Over Recommended Operating Conditions for McBSP as SPI Master or Slave: CLKSTP = 11b, CLKXP = 1	145
4−54	Video Port 0 and 1 (VP0 and VP1) Control Registers	146
4−55	Timing Requirements for Video Capture Mode for VPxCLKINx	149
4−56	Timing Requirements in Video Capture Mode for Video Data and Control Inputs	150
4−57	Timing Requirements for Video Display Mode for VPxCLKINx	151
4−58	Timing Requirements in Video Display Mode for Video Control Input Shown With Respect to VPxCLKINx and VPxCLKOUTx	151
4−59	Switching Characteristics Over Recommended Operating Conditions in Video Display Mode for Video Data and Control Output Shown With Respect to VPxCLKINx and VPxCLKOUTx	152
4−60	Timing Requirements for Dual-Display Sync Mode for VPxCLKINx	153
4−61	VCXO Interpolated Control (VIC) Port Registers	154
4−62	Timing Requirments for STCLK	155
4−63	Ethernet MAC (EMAC) Control Registers	156
4−64	EMAC Statistics Registers	159
4−65	EMAC Wrapper	159

Table		Page
4−66	EWRAP Registers	160
4−67	Timing Requirements for MRCLK	160
4−68	Timing Requirements for MTCLK	160
4−69	Timing Requirements for EMAC MII Receive 10/100 Mbit/s	161
4−70	Switching Characteristics Over Recommended Operating Conditions for EMAC MII Transmit 10/100 Mbit/s	161
4−71	MDIO Registers	162
4−72	Timing Requirements for MDIO Input	163
4−73	Switching Characteristics Over Recommended Operating Conditions for MDIO Output	163
4−74	Timer 0 Registers	164
4−75	Timer 1 Registers	164
4−76	Timer 2 Registers	164
4−77	Timing Requirements for Timer Inputs	165
4−78	Switching Characteristics Over Recommended Operating Conditions for Timer Outputs	165
4−79	GP0 Registers	167
4−80	Timing Requirements for GPIO Inputs	167
4−81	Switching Characteristics Over Recommended Operating Conditions for GPIO Outputs	167
4−82	JTAG ID Register Selection Bit Descriptions	169
4−83	JTAG ID Register	169
4−84	Timing Requirements for JTAG Test Port	169
4−85	Switching Characteristics Over Recommended Operating Conditions for JTAG Test Port	169
5−1	Thermal Resistance Characteristics (S-PBGA Package) [GDK]	170
5−2	Thermal Resistance Characteristics (S-PBGA Package) [GNZ]	170

This page intentionally left blank

1 Device Overview

1.1 Features

- High-Performance Digital Media Processor (TMS320DM641/TMS320DM640)
  - 2.5-, 2-, 1.67-ns Instruction Cycle Time
  - 400-, 500-, 600-MHz Clock Rate
  - Eight 32-Bit Instructions/Cycle
  - 3200, 4000, 4800 MIPS
  - Fully Software-Compatible With C64x™
- VelociTI.2™ Extensions to VelociTI™ Advanced Very-Long-Instruction-Word (VLIW) TMS320C64x™ DSP Core
  - Eight Highly Independent Functional Units With VelociTI.2™ Extensions:
    - Six ALUs (32-/40-Bit), Each Supports Single 32-Bit, Dual 16-Bit, or Quad 8-Bit Arithmetic per Clock Cycle
    - Two Multipliers Support Four 16 x 16-Bit Multiplies (32-Bit Results) per Clock Cycle or Eight 8 x 8-Bit Multiplies (16-Bit Results) per Clock Cycle
  - Load-Store Architecture With Non-Aligned Support
  - 64 32-Bit General-Purpose Registers
  - Instruction Packing Reduces Code Size
  - All Instructions Conditional
- Instruction Set Features
  - Byte-Addressable (8-/16-/32-/64-Bit Data)
  - 8-Bit Overflow Protection
  - Bit-Field Extract, Set, Clear
  - Normalization, Saturation, Bit-Counting
  - VelociTI.2™ Increased Orthogonality
- L1/L2 Memory Architecture
  - 128K-Bit (16K-Byte) L1P Program Cache (Direct Mapped)
  - 128K-Bit (16K-Byte) L1D Data Cache (2-Way Set-Associative)
  - 1M-Bit (128K-Byte) L2 Unified Mapped RAM/Cache (Flexible RAM/Cache Allocation)
- Endianess: Little Endian, Big Endian
- 32-Bit External Memory Interface (EMIF)
  - Glueless Interface to Asynchronous Memories (SRAM and EPROM) and Synchronous Memories (SDRAM, SBSRAM, ZBT SRAM, and FIFO)
  - 1024M-Byte Total Addressable External Memory Space
- Enhanced Direct-Memory-Access (EDMA) Controller (64 Independent Channels)
- 10/100 Mb/s Ethernet MAC (EMAC)
  - IEEE 802.3 Compliant
  - Media Independent Interface (MII)
  - 8 Independent Transmit (TX) Channels and 1 Receive (RX) Channel
- Management Data Input/Output (MDIO)
- Two Configurable Video Ports (DM641)
- One Configurable Video Port (DM640)
  - Providing a Glueless I/F to Common Video Decoder and Encoder Devices
  - Supports Multiple Resolutions and Video Standards
- VCXO Interpolated Control Port (VIC)
  - Supports Audio/Video Synchronization
- Host-Port Interface (HPI) [16-Bit] (DM641)
- Multichannel Audio Serial Port (McASP)
  - Four Serial Data Pins
  - Wide Variety of I2S and Similar Bit Stream Format
  - Integrated Digital Audio I/F Transmitter Supports S/PDIF, IEC60958-1, AES-3, CP-430 Formats
- Inter-Integrated Circuit (I^2C) Bus
- Two Multichannel Buffered Serial Ports
- Three 32-Bit General-Purpose Timers
- Eight General-Purpose I/O (GPIO) Pins
- Flexible PLL Clock Generator
- IEEE-1149.1 (JTAG†) Boundary-Scan-Compatible
- 548-Pin Ball Grid Array (BGA) Package (GDK and ZDK Suffixes), 0.8-mm Ball Pitch
- 548-Pin Ball Grid Array (BGA) Package (GNZ and ZNZ Suffixes), 1.0-mm Ball Pitch
- 0.13-μm/6-Level Cu Metal Process (CMOS)
- 3.3-V I/O, 1.2-V Internal (-400, -500)
- 3.3-V I/O, 1.4-V Internal (-600)

C64x, VelociTI.2, VelociTI, and TMS320C64x are trademarks of Texas Instruments.
All trademarks are the property of their respective owners.
† IEEE Standard 1149.1-1990 Standard-Test-Access Port and Boundary Scan Architecture.

1.2 Description

The TMS320C64x™ DSPs (including the TMS320DM641 and TMS320DM640 devices) are the highest-performance fixed-point DSP generation in the TMS320C6000™ DSP platform. The TMS320DM641 (DM641) and TMS320DM640 (DM640) devices are based on the second-generation high-performance, advanced VelociTI™ very-long-instruction-word (VLIW) architecture (VelociTI.2™) developed by Texas Instruments (TI), making these DSPs an excellent choice for digital media applications. The C64x™ is a code-compatible member of the C6000™ DSP platform.

With performance of up to 4800 million instructions per second (MIPS) at a clock rate of 600 MHz, the DM641 device offers cost-effective solutions to high-performance DSP programming challenges.

With performance of up to 3200 million instructions per second (MIPS) at a clock rate of 400 MHz, the DM640 device offers cost-effective solutions to high-performance DSP programming challenges.

The DM641/DM640 DSP possesses the operational flexibility of high-speed controllers and the numerical capability of array processors. The C64x™ DSP core processor has 64 general-purpose registers of 32-bit word length and eight highly independent functional units—two multipliers for a 32-bit result and six arithmetic logic units (ALUs)— with VelociTI.2™ extensions. The VelociTI.2™ extensions in the eight functional units include new instructions to accelerate the performance in video and imaging applications and extend the parallelism of the VelociTI™ architecture. The DM641 can produce four 16-bit multiply-accumulates (MACs) per cycle for a total of 2400 million MACs per second (MMACS), or eight 8-bit MACs per cycle for a total of 4800 MMACS. The DM640 can produce four 16-bit multiply-accumulates (MACs) per cycle for a total of 1600 million MACs per second (MMACS), or eight 8-bit MACs per cycle for a total of 3200 MMACS. The DM641/DM640 DSP also has application-specific hardware logic, on-chip memory, and additional on-chip peripherals similar to the other C6000™ DSP platform devices.

The DM641/DM640 uses a two-level cache-based architecture and has a powerful and diverse set of peripherals. The Level 1 program cache (L1P) is a 128-Kbit direct mapped cache and the Level 1 data cache (L1D) is a 128-Kbit 2-way set-associative cache. The Level 2 memory/cache (L2) consists of a 1-Mbit memory space that is shared between program and data space. L2 memory can be configured as mapped memory, cache, or combinations of the two. The peripheral set includes: two configurable video ports (DM641); one configurable video port (DM640); a 10/100 Mb/s Ethernet MAC (EMAC); a management data input/output (MDIO) module; a VCXO interpolated control port (VIC); one 4-bit multichannel buffered audio serial port (McASP0); an inter-integrated circuit (I2C) Bus module; two multichannel buffered serial ports (McBSPs); three 32-bit general-purpose timers; a 16-bit host-port interface (HPI16) [DM641]; an 8-pin general-purpose input/output port (GP0) with programmable interrupt/event generation modes; and a 32-bit glueless external memory interface (EMIFA), which is capable of interfacing to synchronous and asynchronous memories and peripherals.

The DM641 device has two single-channel 8-bit configurable video port peripherals (VP0 and VP1). The DM640 device has one single-channel 8-bit configurable video port peripheral (VP0). These video port peripherals provide a glueless interface to common video decoder and encoder devices. The DM641/DM640 video port peripherals support multiple resolutions and video standards (e. g., CCIR601 and ITU−BT.656).

These video port peripherals are configurable and can support either video capture and/or video display modes.

For more details on the Video Port peripherals, see the *TMS320C64x DSP Video Port/VCXO Interpolated Control (VIC) Port Reference Guide* (literature number SPRU629).

The McASP0 port supports one transmit and one receive clock zone, with four serial data pins which can be individually allocated to any of the two zones. The serial port supports time-division multiplexing on each pin from 2 to 32 time slots. The DM641/DM640 has sufficient bandwidth to support all 4 serial data pins transmitting a 192-kHz stereo signal. Serial data in each zone may be transmitted and received on multiple serial data pins simultaneously and formatted in a multitude of variations on the Philips Inter-IC Sound (I^2S) format.

TMS320C6000, and C6000 are trademarks of Texas Instruments.

In addition, the McASP0 transmitter may be programmed to output multiple S/PDIF, IEC60958, AES-3, CP-430 encoded data channels simultaneously, with a single RAM containing the full implementation of user data and channel status fields.

McASP0 also provides extensive error-checking and recovery features, such as the bad clock detection circuit for each high-frequency master clock which verifies that the master clock is within a programmed frequency range.

The VCXO interpolated control (VIC) port provides digital-to-analog conversion with resolution from 9-bits to up to 16-bits. The output of the VIC is a single bit interpolated D/A output. For more details on the VIC port, see the *TMS320C64x DSP Video Port/VCXO Interpolated Control (VIC) Port Reference Guide* (literature number SPRU629).

The ethernet media access controller (EMAC) provides an efficient interface between the DM641/DM640 DSP core processor and the network. The DM641/DM640 EMAC support both 10Base-T and 100Base-TX, or 10 Mbits/second (Mbps) and 100 Mbps in either half- or full-duplex, with hardware flow control and quality of service (QOS) support. The DM641/DM640 EMAC makes use of a custom interface to the DSP core that allows efficient data transmission and reception. For more details on the EMAC, see the *TMS320C6000 DSP Ethernet Media Access Controller (EMAC) / Management Data Input/Output (MDIO) Module Reference Guide* (literature number SPRU628).

The management data input/output (MDIO) module continuously polls all 32 MDIO addresses in order to enumerate all PHY devices in the system. Once a PHY candidate has been selected by the DSP, the MDIO module transparently monitors its link state by reading the PHY status register. Link change events are stored in the MDIO module and can optionally interrupt the DSP, allowing the DSP to poll the link status of the device without continuously performing costly MDIO accesses. For more details on the MDIO, see the *TMS320C6000 DSP Ethernet Media Access Controller (EMAC) / Management Data Input/Output (MDIO) Module Reference Guide* (literature number SPRU628).

The I2C0 port on the TMS320DM641/DM640 allows the DSP to easily control peripheral devices and communicate with a host processor. In addition, the standard multichannel buffered serial port (McBSP) may be used to communicate with serial peripheral interface (SPI) mode peripheral devices.

The DM641/DM640 has a complete set of development tools which includes: a new C compiler, an assembly optimizer to simplify programming and scheduling, and a Windows™ debugger interface for visibility into source code execution.

Windows is a registered trademark of the Microsoft Corporation.

1.3 Device Characteristics

Table 1−1 provides an overview of the DM641 DSP. The table shows significant features of the DM641 device, including the capacity of on-chip RAM, the peripherals, the CPU frequency, and the package type with pin count.

Table 1−1. Characteristics of the DM641 Processor

HARDWARE FEATURES		DM641
Peripherals Not all peripherals pins are available at the same time (For more detail, see the Device Configuration section).	EMIFA (32-bit bus width) (clock source = AECLKIN)	1
	EDMA (64 independent channels)	1
	McASP0 (uses Peripheral Clock [AUXCLK])	1
	I2C0 (uses Peripheral Clock)	1
	HPI (16-bit)	1 (HPI16)
	McBSPs (internal clock source = CPU/4 clock frequency)	2
	Configurable Video Ports (VP0 and VP1)	2
	10/100 Ethernet MAC (EMAC)	1
	Management Data Input/Output (MDIO)	1
	VCXO Interpolated Control Port (VIC)	1
	32-Bit Timers (internal clock source = CPU/8 clock frequency)	3
	General-Purpose Input/Output Port (GP0)	8
On-Chip Memory	Size (Bytes)	160K
	Organization	16K-Byte (16KB) L1 Program (L1P) Cache 16KB L1 Data (L1D) Cache 128KB Unified Mapped RAM/Cache (L2)
CPU ID + CPU Rev ID	Control Status Register (CSR.[31:16])	0x0C01
JTAG BSDL_ID	JTAGID register (address location: 0x01B3F008)	0x0007902F
Frequency	MHz	500, 600
Cycle Time	ns	2 ns (DM641-500) [500-MHz CPU, 100 MHz EMIF†] 1.67 ns (DM641-600) [600-MHz CPU, 133 MHz EMIF†]
Voltage	Core (V)	1.2 V (-500) 1.4 V (-600)
	I/O (V)	3.3 V
PLL Options	CLKIN frequency multiplier	Bypass (x1), x6, x12
BGA Package	23 x 23 mm	548-Pin BGA (GDK and ZDK)
	27 x 27 mm	548-Pin BGA (GNZ and ZNZ)
Process Technology	µm	0.13 µm
Product Status‡	Product Preview (PP), Advance Information (AI), or Production Data (PD)	PD

† On this DM64x™ device, the rated EMIF speed affects only the SDRAM interface on the EMIF. For more detailed information, see the EMIF device speed portion of this data sheet.

‡ PRODUCTION DATA information is current as of publication date. Products conform to specifications per the terms of Texas Instruments standard warranty. Production processing does not necessarily include testing of all parameters.

Table 1−2 provides an overview of the DM640 DSP. The table shows significant features of the DM640 device, including the capacity of on-chip RAM, the peripherals, the CPU frequency, and the package type with pin count.

Table 1−2. Characteristics of the DM640 Processor

HARDWARE FEATURES		DM640
Peripherals Not all peripherals pins are available at the same time (For more detail, see the Device Configuration section).	EMIFA (32-bit bus width) (clock source = AECLKIN)	1
	EDMA (64 independent channels)	1
	McASP0 (uses Peripheral Clock [AUXCLK])	1
	I2C0 (uses Peripheral Clock)	1
	McBSPs (internal clock source = CPU/4 clock frequency)	2
	Configurable Video Port (VP0)	1
	10/100 Ethernet MAC (EMAC)	1
	Management Data Input/Output (MDIO)	1
	VCXO Interpolated Control Port (VIC)	1
	32-Bit Timers (internal clock source = CPU/8 clock frequency)	3
	General-Purpose Input/Output Port (GP0)	8
On-Chip Memory	Size (Bytes)	160K
	Organization	16K-Byte (16KB) L1 Program (L1P) Cache 16KB L1 Data (L1D) Cache 128KB Unified Mapped RAM/Cache (L2)
CPU ID + CPU Rev ID	Control Status Register (CSR.[31:16])	0x0C01
JTAG BSDL_ID	JTAGID register (address location: 0x01B3F008)	0x0007902F
Frequency	MHz	400
Cycle Time	ns	2.5 ns (DM640-400) [400-MHz CPU, 100 MHz EMIF†]
Voltage	Core (V)	1.2 V (-400)
	I/O (V)	3.3 V
PLL Options	CLKIN frequency multiplier	Bypass (x1), x6, x12
BGA Package	23 x 23 mm	548-Pin BGA (GDK and ZDK)
	27 x 27 mm	548-Pin BGA (GNZ and ZNZ)
Process Technology	µm	0.13 µm
Product Status‡	Product Preview (PP), Advance Information (AI), or Production Data (PD)	PD

† On this DM64x™ device, the rated EMIF speed affects only the SDRAM interface on the EMIF. For more detailed information, see the EMIF device speed portion of this data sheet.

‡ PRODUCTION DATA information is current as of publication date. Products conform to specifications per the terms of Texas Instruments standard warranty. Production processing does not necessarily include testing of all parameters.

1.4 Device Compatibility

The DM641/DM640 device is a code-compatible member of the C6000™ DSP platform.

The C64x™ DSP generation of devices has a diverse and powerful set of peripherals. The common peripheral set and pin-compatibility that the DM641 and DM640 devices offer lead to easier system designs and faster time to market.

The DM640 device is a sub-set of the DM641 device and does *not* support an HPI peripheral or a second Video Port (VP1) peripheral. Table 1−3 identifies the peripherals that are available on the DM641 and DM640 devices.

Table 1−3. Peripherals Available on the DM641 and DM640 Devices†‡

PERIPHERALS/COPROCESSORS	DM641	DM640
EMIFA (32-bit bus width)	√	√
EDMA (64 independent channels)	√	√
10/100 EMAC	√	√
MDIO	√	√
HPI (16-bit)	√	—
McBSPs (McBSP0, McBSP1)	√	√
McASP (4-bit)	√	√
8-bit Video Port (VP0)	√	√
8-bit Video Port (VP1)	√	—
VIC	√	√
I2C	√	√
Timers (32-bit) [TIMER0, TIMER1, TIMER2]	√	√
GPIOs (GP[7:0])	√	√

† — denotes peripheral/coprocessor is *not* available on this device.
‡ Not all peripherals pins are available at the same time. (For more details, see the Device Configuration section.)

1.5 Functional Block Diagram

Figure 1−1 shows the functional block diagram of the DM641/DM640 devices.

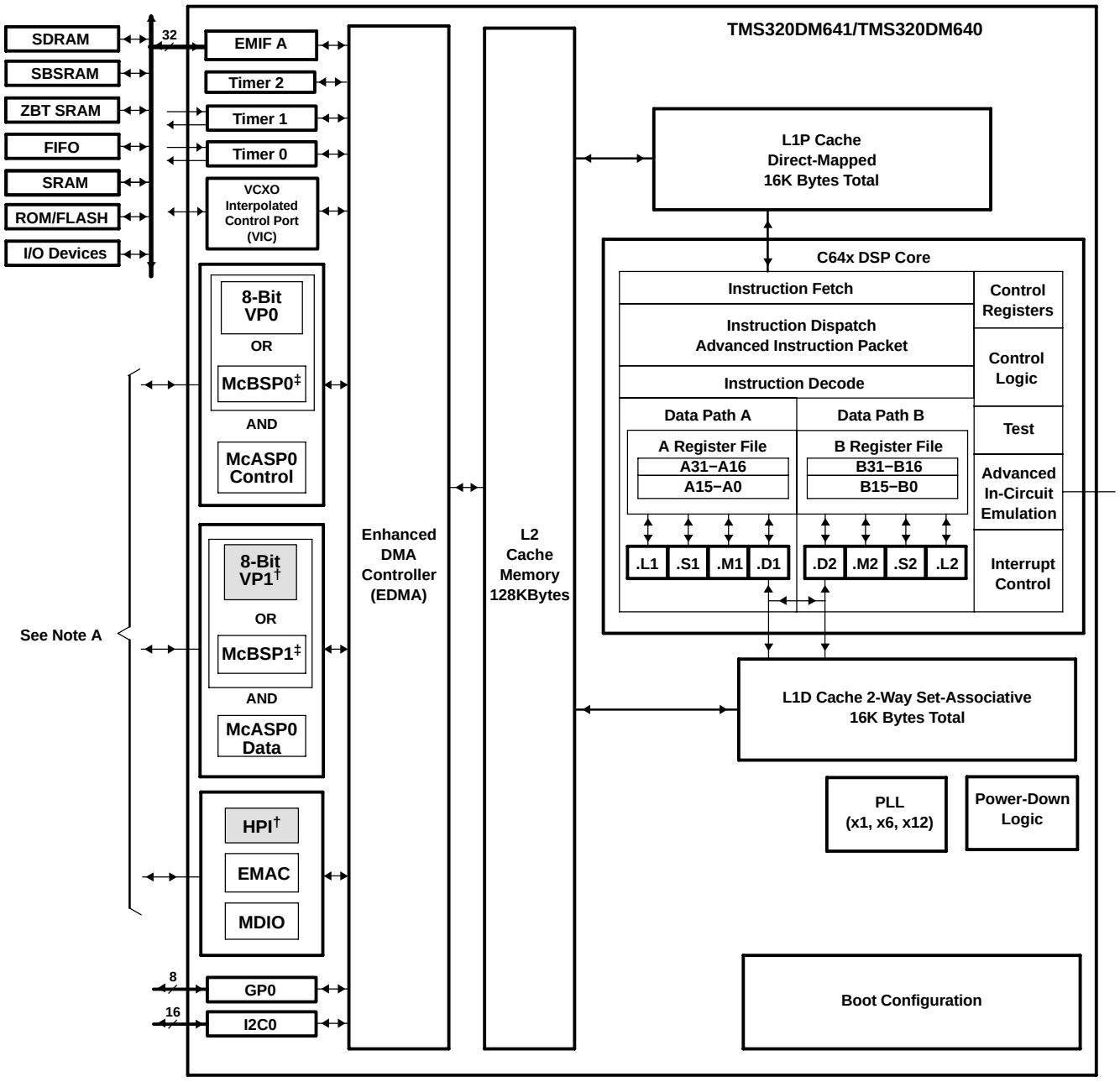

† HPI and VP1 are ***not*** supported on the DM640 device.

‡ McBSPs: Framing Chips − H.100, MVIP, SCSA, T1, E1; AC97 Devices; SPI Devices; Codecs

NOTE A: The Video Port 0 (VP0) peripheral is muxed with the McBSP0 peripheral and the McASP0 control pins (DM641/DM640). The Video Port 1 (VP1) peripheral is muxed with the McBSP1 peripheral and the McASP0 data pins (DM641 only). For more details on the multiplexed pins of these peripherals, see the Device Configurations section of this data sheet.

Figure 1−1. Functional Block Diagram

1.6 CPU (DSP Core) Description

The CPU fetches VelociTI™ advanced very-long instruction words (VLIWs) (256 bits wide) to supply up to eight 32-bit instructions to the eight functional units during every clock cycle. The VelociTI™ VLIW architecture features controls by which all eight units do not have to be supplied with instructions if they are not ready to execute. The first bit of every 32-bit instruction determines if the next instruction belongs to the same execute packet as the previous instruction, or whether it should be executed in the following clock as a part of the next execute packet. Fetch packets are always 256 bits wide; however, the execute packets can vary in size. The variable-length execute packets are a key memory-saving feature, distinguishing the C64x CPUs from other VLIW architectures. The C64x™ VelociTI.2™ extensions add enhancements to the TMS320C62x™ DSP VelociTI™ architecture. These enhancements include:

- Register file enhancements
- Data path extensions
- Quad 8-bit and dual 16-bit extensions with data flow enhancements
- Additional functional unit hardware
- Increased orthogonality of the instruction set
- Additional instructions that reduce code size and increase register flexibility

The CPU features two sets of functional units. Each set contains four units and a register file. One set contains functional units .L1, .S1, .M1, and .D1; the other set contains units .D2, .M2, .S2, and .L2. The two register files each contain 32 32-bit registers for a total of 64 general-purpose registers. In addition to supporting the packed 16-bit and 32-/40-bit fixed-point data types found in the C62x™ VelociTI™ VLIW architecture, the C64x™ register files also support packed 8-bit data and 64-bit fixed-point data types. The two sets of functional units, along with two register files, compose sides A and B of the CPU [see the functional block and CPU (DSP core) diagram, and Figure 1−2]. The four functional units on each side of the CPU can freely share the 32 registers belonging to that side. Additionally, each side features a “data cross path”—a single data bus connected to all the registers on the other side, by which the two sets of functional units can access data from the register files on the opposite side. The C64x CPU pipelines data-cross-path accesses over multiple clock cycles. This allows the same register to be used as a data-cross-path operand by multiple functional units in the same execute packet. All functional units in the C64x CPU can access operands via the data cross path. Register access by functional units on the same side of the CPU as the register file can service all the units in a single clock cycle. On the C64x CPU, a delay clock is introduced whenever an instruction attempts to read a register via a data cross path if that register was updated in the previous clock cycle.

In addition to the C62x™ DSP fixed-point instructions, the C64x™ DSP includes a comprehensive collection of quad 8-bit and dual 16-bit instruction set extensions. These VelociTI.2™ extensions allow the C64x CPU to operate directly on packed data to streamline data flow and increase instruction set efficiency. This is a key factor for video and imaging applications.

Another key feature of the C64x CPU is the load/store architecture, where all instructions operate on registers (as opposed to data in memory). Two sets of data-addressing units (.D1 and .D2) are responsible for all data transfers between the register files and the memory. The data address driven by the .D units allows data addresses generated from one register file to be used to load or store data to or from the other register file. The C64x .D units can load and store bytes (8 bits), half-words (16 bits), and words (32 bits) with a single instruction. And with the new data path extensions, the C64x .D unit can load and store doublewords (64 bits) with a single instruction. Furthermore, the non-aligned load and store instructions allow the .D units to access words and doublewords on any byte boundary. The C64x CPU supports a variety of indirect addressing modes using either linear- or circular-addressing with 5- or 15-bit offsets. All instructions are conditional, and most can access any one of the 64 registers. Some registers, however, are singled out to support specific addressing modes or to hold the condition for conditional instructions (if the condition is not automatically “true”).

TMS320C62x and C62x are trademarks of Texas Instruments.

The two .M functional units perform all multiplication operations. Each of the C64x .M units can perform two 16 × 16-bit multiplies or four 8 × 8-bit multiplies per clock cycle. The .M unit can also perform 16 × 32-bit multiply operations, dual 16 × 16-bit multiplies with add/subtract operations, and quad 8 × 8-bit multiplies with add operations. In addition to standard multiplies, the C64x .M units include bit-count, rotate, Galois field multiplies, and bidirectional variable shift hardware.

The two .S and .L functional units perform a general set of arithmetic, logical, and branch functions with results available every clock cycle. The arithmetic and logical functions on the C64x CPU include single 32-bit, dual 16-bit, and quad 8-bit operations.

The processing flow begins when a 256-bit-wide instruction fetch packet is fetched from a program memory. The 32-bit instructions destined for the individual functional units are “linked” together by “1” bits in the least significant bit (LSB) position of the instructions. The instructions that are “chained” together for simultaneous execution (up to eight in total) compose an execute packet. A “0” in the LSB of an instruction breaks the chain, effectively placing the instructions that follow it in the next execute packet. A C64x™ DSP device enhancement now allows execute packets to cross fetch-packet boundaries. In the TMS320C62x™/TMS320C67x™ DSP devices, if an execute packet crosses the fetch-packet boundary (256 bits wide), the assembler places it in the next fetch packet, while the remainder of the current fetch packet is padded with NOP instructions. In the C64x™ DSP device, the execute boundary restrictions have been removed, thereby, eliminating all of the NOPs added to pad the fetch packet, and thus, decreasing the overall code size. The number of execute packets within a fetch packet can vary from one to eight. Execute packets are dispatched to their respective functional units at the rate of one per clock cycle and the next 256-bit fetch packet is not fetched until all the execute packets from the current fetch packet have been dispatched. After decoding, the instructions simultaneously drive all active functional units for a maximum execution rate of eight instructions every clock cycle. While most results are stored in 32-bit registers, they can be subsequently moved to memory as bytes, half-words, or doublewords. All load and store instructions are byte-, half-word-, word-, or doubleword-addressable.

For more details on the C64x CPU functional units enhancements, see the following documents:

- *TMS320C6000 CPU and Instruction Set Reference Guide* (literature number SPRU189)
- *TMS320C64x Technical Overview* (literature number SPRU395)

TMS320C67x is a trademark of Texas Instruments.

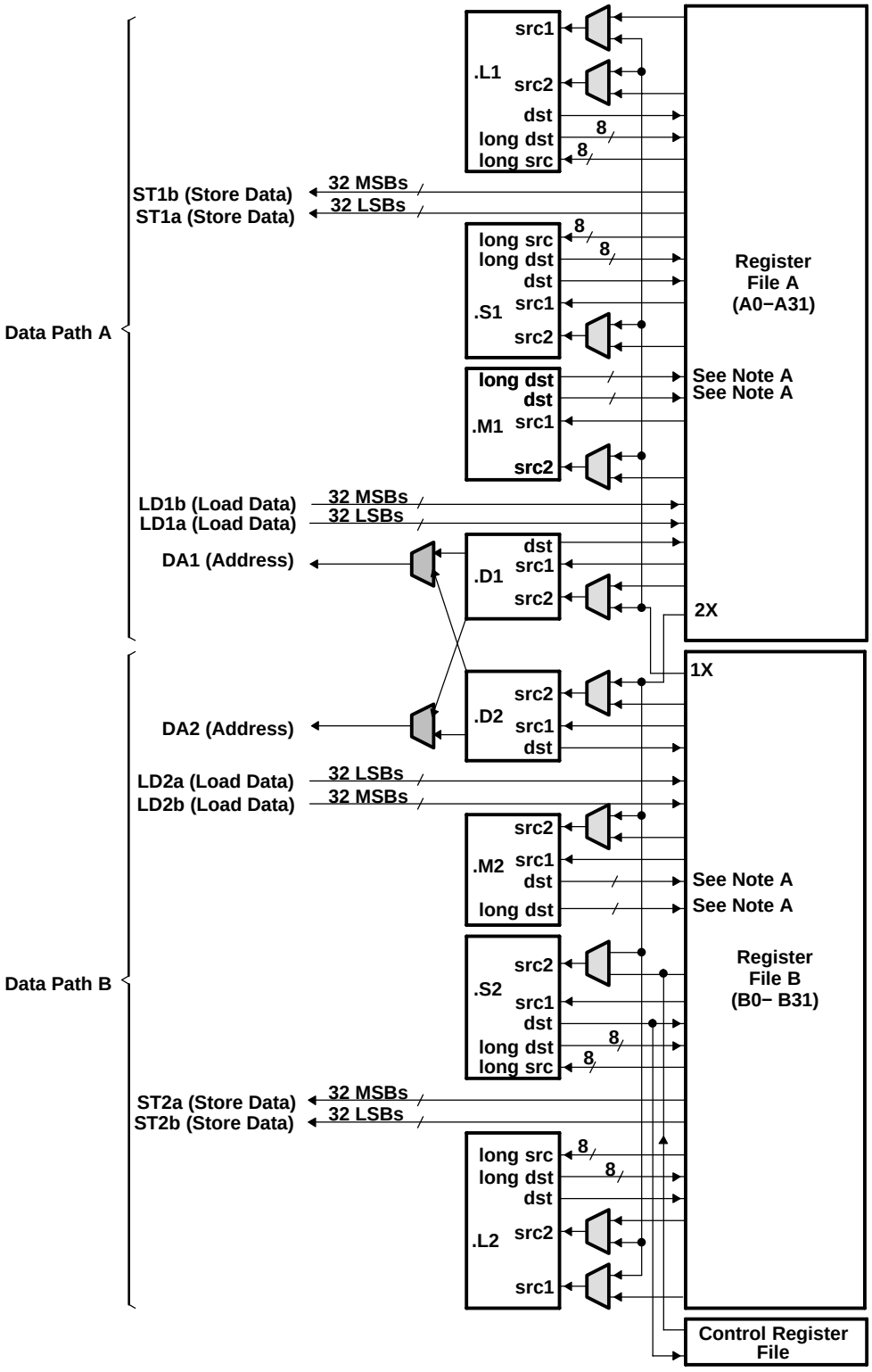

NOTE A: For the .M functional units, the long dst is 32 MSBs and the dst is 32 LSBs.

Figure 1−2. TMS320C64x™ CPU (DSP Core) Data Paths

1.6.1 CPU Core Registers

Table 1−4. L2 Cache Registers (C64x)

HEX ADDRESS RANGE	ACRONYM	REGISTER NAME	COMMENTS
0184 0000	CCFG	Cache configuration register	
0184 0004 − 0184 0FFC	−	Reserved	
0184 1000	EDMAWEIGHT	L2 EDMA access control register	
0184 1004 − 0184 1FFC	−	Reserved	
0184 2000	L2ALLOC0	L2 allocation register 0	
0184 2004	L2ALLOC1	L2 allocation register 1	
0184 2008	L2ALLOC2	L2 allocation register 2	
0184 200C	L2ALLOC3	L2 allocation register 3	
0184 2010 − 0184 3FFC	−	Reserved	
0184 4000	L2WBAR	L2 writeback base address register	
0184 4004	L2WWC	L2 writeback word count register	
0184 4010	L2WIBAR	L2 writeback invalidate base address register	
0184 4014	L2WIWC	L2 writeback invalidate word count register	
0184 4018	L2IBAR	L2 invalidate base address register	
0184 401C	L2IWC	L2 invalidate word count register	
0184 4020	L1PIBAR	L1P invalidate base address register	
0184 4024	L1PIWC	L1P invalidate word count register	
0184 4030	L1DWIBAR	L1D writeback invalidate base address register	
0184 4034	L1DWIWC	L1D writeback invalidate word count register	
0184 4038 − 0184 4044	−	Reserved	
0184 4048	L1DIBAR	L1D invalidate base address register	
0184 404C	L1DIWC	L1D invalidate word count register	
0184 4050 − 0184 4FFC	−	Reserved	
0184 5000	L2WB	L2 writeback all register	
0184 5004	L2WBINV	L2 writeback invalidate all register	
0184 5008 − 0184 7FFC	−	Reserved	
0184 8000 −0184 81FC	MAR0 to MAR127	Reserved	
0184 8200	MAR128	Controls EMIFA CE0 range 8000 0000 − 80FF FFFF	
0184 8204	MAR129	Controls EMIFA CE0 range 8100 0000 − 81FF FFFF	
0184 8208	MAR130	Controls EMIFA CE0 range 8200 0000 − 82FF FFFF	
0184 820C	MAR131	Controls EMIFA CE0 range 8300 0000 − 83FF FFFF	
0184 8210	MAR132	Controls EMIFA CE0 range 8400 0000 − 84FF FFFF	
0184 8214	MAR133	Controls EMIFA CE0 range 8500 0000 − 85FF FFFF	
0184 8218	MAR134	Controls EMIFA CE0 range 8600 0000 − 86FF FFFF	
0184 821C	MAR135	Controls EMIFA CE0 range 8700 0000 − 87FF FFFF	
0184 8220	MAR136	Controls EMIFA CE0 range 8800 0000 − 88FF FFFF	
0184 8224	MAR137	Controls EMIFA CE0 range 8900 0000 − 89FF FFFF	
0184 8228	MAR138	Controls EMIFA CE0 range 8A00 0000 − 8AFF FFFF	
0184 822C	MAR139	Controls EMIFA CE0 range 8B00 0000 − 8BFF FFFF	
0184 8230	MAR140	Controls EMIFA CE0 range 8C00 0000 − 8CFF FFFF	
0184 8234	MAR141	Controls EMIFA CE0 range 8D00 0000 − 8DFF FFFF	

Table 1−4. L2 Cache Registers (C64x) (Continued)

HEX ADDRESS RANGE	ACRONYM	REGISTER NAME	COMMENTS
0184 8238	MAR142	Controls EMIFA CE0 range 8E00 0000 − 8EFF FFFF	
0184 823C	MAR143	Controls EMIFA CE0 range 8F00 0000 − 8FFF FFFF	
0184 8240	MAR144	Controls EMIFA CE1 range 9000 0000 − 90FF FFFF	
0184 8244	MAR145	Controls EMIFA CE1 range 9100 0000 − 91FF FFFF	
0184 8248	MAR146	Controls EMIFA CE1 range 9200 0000 − 92FF FFFF	
0184 824C	MAR147	Controls EMIFA CE1 range 9300 0000 − 93FF FFFF	
0184 8250	MAR148	Controls EMIFA CE1 range 9400 0000 − 94FF FFFF	
0184 8254	MAR149	Controls EMIFA CE1 range 9500 0000 − 95FF FFFF	
0184 8258	MAR150	Controls EMIFA CE1 range 9600 0000 − 96FF FFFF	
0184 825C	MAR151	Controls EMIFA CE1 range 9700 0000 − 97FF FFFF	
0184 8260	MAR152	Controls EMIFA CE1 range 9800 0000 − 98FF FFFF	
0184 8264	MAR153	Controls EMIFA CE1 range 9900 0000 − 99FF FFFF	
0184 8268	MAR154	Controls EMIFA CE1 range 9A00 0000 − 9AFF FFFF	
0184 826C	MAR155	Controls EMIFA CE1 range 9B00 0000 − 9BFF FFFF	
0184 8270	MAR156	Controls EMIFA CE1 range 9C00 0000 − 9CFF FFFF	
0184 8274	MAR157	Controls EMIFA CE1 range 9D00 0000 − 9DFF FFFF	
0184 8278	MAR158	Controls EMIFA CE1 range 9E00 0000 − 9EFF FFFF	
0184 827C	MAR159	Controls EMIFA CE1 range 9F00 0000 − 9FFF FFFF	
0184 8280	MAR160	Controls EMIFA CE2 range A000 0000 − A0FF FFFF	
0184 8284	MAR161	Controls EMIFA CE2 range A100 0000 − A1FF FFFF	
0184 8288	MAR162	Controls EMIFA CE2 range A200 0000 − A2FF FFFF	
0184 828C	MAR163	Controls EMIFA CE2 range A300 0000 − A3FF FFFF	
0184 8290	MAR164	Controls EMIFA CE2 range A400 0000 − A4FF FFFF	
0184 8294	MAR165	Controls EMIFA CE2 range A500 0000 − A5FF FFFF	
0184 8298	MAR166	Controls EMIFA CE2 range A600 0000 − A6FF FFFF	
0184 829C	MAR167	Controls EMIFA CE2 range A700 0000 − A7FF FFFF	
0184 82A0	MAR168	Controls EMIFA CE2 range A800 0000 − A8FF FFFF	
0184 82A4	MAR169	Controls EMIFA CE2 range A900 0000 − A9FF FFFF	
0184 82A8	MAR170	Controls EMIFA CE2 range AA00 0000 − AAFF FFFF	
0184 82AC	MAR171	Controls EMIFA CE2 range AB00 0000 − ABFF FFFF	
0184 82B0	MAR172	Controls EMIFA CE2 range AC00 0000 − ACFF FFFF	
0184 82B4	MAR173	Controls EMIFA CE2 range AD00 0000 − ADFF FFFF	
0184 82B8	MAR174	Controls EMIFA CE2 range AE00 0000 − AEFF FFFF	
0184 82BC	MAR175	Controls EMIFA CE2 range AF00 0000 − AFFF FFFF	
0184 82C0	MAR176	Controls EMIFA CE3 range B000 0000 − B0FF FFFF	
0184 82C4	MAR177	Controls EMIFA CE3 range B100 0000 − B1FF FFFF	
0184 82C8	MAR178	Controls EMIFA CE3 range B200 0000 − B2FF FFFF	
0184 82CC	MAR179	Controls EMIFA CE3 range B300 0000 − B3FF FFFF	
0184 82D0	MAR180	Controls EMIFA CE3 range B400 0000 − B4FF FFFF	
0184 82D4	MAR181	Controls EMIFA CE3 range B500 0000 − B5FF FFFF	
0184 82D8	MAR182	Controls EMIFA CE3 range B600 0000 − B6FF FFFF	
0184 82DC	MAR183	Controls EMIFA CE3 range B700 0000 − B7FF FFFF	
0184 82E0	MAR184	Controls EMIFA CE3 range B800 0000 − B8FF FFFF	

Table 1−4. L2 Cache Registers (C64x) (Continued)

HEX ADDRESS RANGE	ACRONYM	REGISTER NAME	COMMENTS
0184 82E4	MAR185	Controls EMIFA CE3 range B900 0000 − B9FF FFFF	
0184 82E8	MAR186	Controls EMIFA CE3 range BA00 0000 − BAFF FFFF	
0184 82EC	MAR187	Controls EMIFA CE3 range BB00 0000 − BBFF FFFF	
0184 82F0	MAR188	Controls EMIFA CE3 range BC00 0000 − BCFF FFFF	
0184 82F4	MAR189	Controls EMIFA CE3 range BD00 0000 − BDFF FFFF	
0184 82F8	MAR190	Controls EMIFA CE3 range BE00 0000 − BEFF FFFF	
0184 82FC	MAR191	Controls EMIFA CE3 range BF00 0000 − BFFF FFFF	
0184 8300 −0184 83FC	MAR192 to MAR255	Reserved	
0184 8400 −0187 FFFF	−	Reserved	

1.7 Memory Map Summary

Table 1−5 shows the memory map address ranges of the DM641/DM640 device. Internal memory is always located at address 0 and can be used as both program and data memory. The external memory address ranges in the DM641/DM640 device begin at the hex address location 0x8000 0000 for EMIFA.

Table 1−5. TMS320DM641/DM640 Memory Map Summary

MEMORY BLOCK DESCRIPTION	BLOCK SIZE (BYTES)	HEX ADDRESS RANGE
Internal RAM (L2)	128K	0000 0000 – 0001 FFFF
Reserved	768K	0004 0000 – 000F FFFF
Reserved	23M	0010 0000 – 017F FFFF
External Memory Interface A (EMIFA) Registers	256K	0180 0000 – 0183 FFFF
L2 Registers	256K	0184 0000 – 0187 FFFF
HPI Registers (DM641 only)†	256K	0188 0000 – 018B FFFF
McBSP 0 Registers	256K	018C 0000 – 018F FFFF
McBSP 1 Registers	256K	0190 0000 – 0193 FFFF
Timer 0 Registers	256K	0194 0000 – 0197 FFFF
Timer 1 Registers	256K	0198 0000 – 019B FFFF
Interrupt Selector Registers	256K	019C 0000 – 019F FFFF
EDMA RAM and EDMA Registers	256K	01A0 0000 – 01A3 FFFF
Reserved	512K	01A4 0000 – 01AB FFFF
Timer 2 Registers	256K	01AC 0000 – 01AF FFFF
GP0 Registers	256K − 4K	01B0 0000 – 01B3 EFFF
Device Configuration Registers	4K	01B3 F000 – 01B3 FFFF
I2C0 Data and Control Registers	16K	01B4 0000 – 01B4 3FFF
Reserved	32K	01B4 4000 – 01B4 BFFF
McASP0 Control Registers	16K	01B4 C000 – 01B4 FFFF
Reserved	192K	01B5 0000 – 01B7 FFFF
Reserved	256K	01B8 0000 – 01BB FFFF
Emulation	256K	01BC 0000 – 01BF FFFF
Reserved	256K	01C0 0000 – 01C3 FFFF
VP0 Control	16K	01C4 0000 – 01C4 3FFF
VP1 Control (DM641 only)†	16K	01C4 4000 – 01C4 7FFF
Reserved	32K	01C4 8000 – 01C4 FFFF
Reserved	192K	01C5 0000 – 01C7 FFFF
EMAC Control	4K	01C8 0000 – 01C8 0FFF
EMAC Wrapper	8K	01C8 1000 – 01C8 2FFF
EWRAP Registers	2K	01C8 3000 – 01C8 37FF
MDIO Control Registers	2K	01C8 3800 – 01C8 3FFF
Reserved	3.5M	01C8 4000 – 01FF FFFF
QDMA Registers	52	0200 0000 – 0200 0033
Reserved	928M – 52	0200 0034 – 2FFF FFFF
McBSP 0 Data	64M	3000 0000 – 33FF FFFF

† For the DM640 device, these memory address locations are reserved.The DM640 device does ***not*** support the HPI and VP1 peripherals.

Table 1−5. TMS320DM641/DM640 Memory Map Summary (Continued)

MEMORY BLOCK DESCRIPTION	BLOCK SIZE (BYTES)	HEX ADDRESS RANGE
McBSP 1 Data	64M	3400 0000 – 37FF FFFF
Reserved	64M	3800 0000 – 3BFF FFFF
McASP0 Data	1M	3C00 0000 – 3C0F FFFF
Reserved	64M − 1M	3C10 0000 – 3FFF FFFF
Reserved	832M	4000 0000 – 73FF FFFF
VP0 Channel A Data	32M	7400 0000 – 75FF FFFF
Reserved	32M	7600 0000 – 77FF FFFF
VP1 Channel A Data (DM641 only)†	32M	7800 0000 – 79FF FFFF
Reserved	32M	7A00 0000 – 7BFF FFFF
Reserved	64M	7C00 0000 – 7FFF FFFF
EMIFA CE0	256M	8000 0000 – 8FFF FFFF
EMIFA CE1	256M	9000 0000 – 9FFF FFFF
EMIFA CE2	256M	A000 0000 – AFFF FFFF
EMIFA CE3	256M	B000 0000 – BFFF FFFF
Reserved	1G	C000 0000 – FFFF FFFF

† For the DM640 device, these memory address locations are reserved.The DM640 device does ***not*** support the HPI and VP1 peripherals.

1.7.1 L2 Architecture Expanded

Figure 1−3 shows the detail of the L2 architecture on the TMS320DM641/DM640 devices. For more information on the L2MODE bits, see the cache configuration (CCFG) register bit field descriptions in the *TMS320C64x Two-Level Internal Memory Reference Guide* (literature number SPRU610).

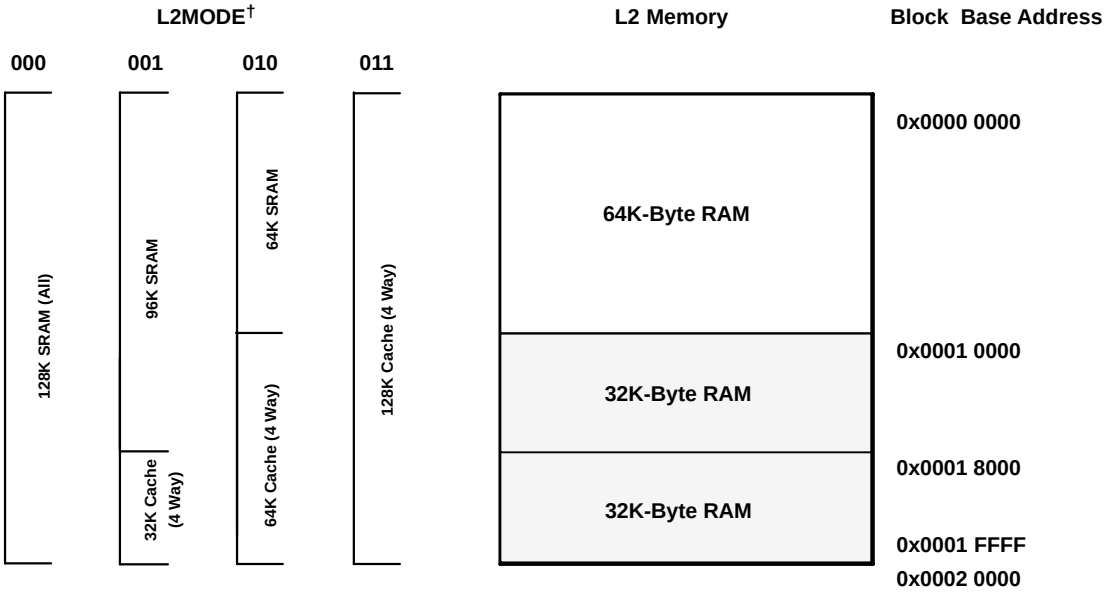

† The L2MODE = 111b is not supported on the DM641/DM640 devices.

Figure 1−3. TMS320DM641/DM640 L2 Architecture Memory Configuration

1.8 Bootmode

The DM641/DM640 device resets using the active-low signal $\overline{\text{RESET}}$. While $\overline{\text{RESET}}$ is low, the device is held in reset and is initialized to the prescribed reset state. Refer to reset timing for reset timing characteristics and states of device pins during reset. The release of $\overline{\text{RESET}}$ starts the processor running with the prescribed device configuration and boot mode.

The DM641 has three types of boot modes while the DM640 has only two types of boot modes:

- Host boot [DM641 only]

  If host boot is selected, upon release of $\overline{\text{RESET}}$, the CPU is internally “stalled” while the remainder of the device is released. During this period, an external host can initialize the CPU’s memory space as necessary through the host interface, including internal configuration registers, such as those that control the EMIF or other peripherals. For the DM641 device, the HPI peripheral is used for host boot. Once the host is finished with all necessary initialization, it must set the DSPINT bit in the HPIC register to complete the boot process. This transition causes the boot configuration logic to bring the CPU out of the “stalled” state. The CPU then begins execution from address 0. The DSPINT condition is not latched by the CPU, because it occurs while the CPU is still internally “stalled”. Also, DSPINT brings the CPU out of the “stalled” state only if the host boot process is selected. All memory may be written to and read by the host. This allows for the host to verify what it sends to the DSP if required. After the CPU is out of the “stalled” state, the CPU needs to clear the DSPINT, otherwise, no more DSPINTs can be received.

- EMIF boot (using default ROM timings)

  Upon the release of $\overline{\text{RESET}}$, the 1K-Byte ROM code located in the beginning of $\overline{\text{CE1}}$ is copied to address 0 by the EDMA using the default ROM timings, while the CPU is internally “stalled”. The data should be stored in the endian format that the system is using. In this case, the EMIF automatically assembles consecutive 8-bit bytes to form the 32-bit instruction words to be copied. The transfer is automatically done by the EDMA as a single-frame block transfer from the ROM to address 0. After completion of the block transfer, the CPU is released from the “stalled” state and starts running from address 0.

- No boot

  With no boot, the CPU begins direct execution from the memory located at address 0. Note: operation is undefined if invalid code is located at address 0.

1.9 Pin Assignments

On Quadrants A, B, C, and D, shading denotes pin assignments that have different functionality between the DM641 and DM640 devices [DM640 denoted within ( )]. See the Terminal Functions table for details.

1.9.1 Pin Map

	1	2	3	4	5	6	7	8	9	10	11	12	13
AF	V_{SS}	DV_{DD}	RSV04	VP1CTL0 (RSV15)	RSV13 (RSV18)	RSV14 (RSV19)	V_{SS}	VP1CLK0 (RSV13)	V_{SS}	VP1CLK1 (RSV14)	V_{SS}	VP0CLK1	V_{SS}
AE	DV_{DD}	DV_{DD}	V_{SS}	CLKMODE1	VP1CTL1 (RSV16)	VP1D[0]/ CLKX1	VP1D[3]/ CLKS1	V_{SS}	RSV15 (RSV21)	V_{SS}	AXR0[3]	V_{SS}	DV_{DD}
AD	VDAC	V_{SS}	RSV03	V_{SS}	VP1CTL2 (RSV17)	VP1D[1]/ FSX1	VP1D[4]/ DR1	VP1D[6]/ CLKR1	RSV16 (RSV22)	AXR0[1]	RSV17 (RSV23)	AFSX0	AMUTEIN0
AC	STCLK	CLKIN	V_{SS}	RSV02	V_{SS}	VP1D[2]/ DX1	VP1D[5]/ FSR1	VP1D[7] (RSV20)	AXR0[0]	AXR0[2]	RSV18 (RSV24)	AHCLKX0	AMUTE0
AB	V_{SS}	V_{SS}	RSV01	V_{SS}	DV_{DD}	V_{SS}	DV_{DD}	DV_{DD}	V_{SS}	DV_{DD}	RSV19 (RSV25)	RSV20 (RSV26)	ACLKX0
AA	HD1 (RSV111)	CLKMODE0	RSV00	V_{SS}	V_{SS}	CV_{DD}	CV_{DD}	V_{SS}	DV_{DD}	V_{SS}	V_{SS}	DV_{DD}	V_{SS}
Y	HD5 (RSV115)	HD3 (RSV113)	HD0 (RSV110)	HD2 (RSV112)	DV_{DD}	CV_{DD}	CV_{DD}	CV_{DD}	V_{SS}	CV_{DD}	CV_{DD}	V_{SS}	CV_{DD}
W	V_{SS}	HD7 (RSV117)	HD4 (RSV114)	HD6 (RSV116)	DV_{DD}	V_{SS}	RSV06						
V	HD10 (RSV120)	HD8 (RSV118)	HD9 (RSV119)	RSV54 (RSV60)	V_{SS}	PLLV	V_{SS}						
U	HD14 (RSV124)	HD12 (RSV122)	HD13 (RSV123)	HD11 (RSV121)	DV_{DD}	V_{SS}	CV_{DD}						
T	V_{SS}	$\overline{HDS2}$ (RSV101)	HD15 (RSV125)	RSV55 (RSV61)	V_{SS}	V_{SS}	CV_{DD}						
R	$\overline{HCS}$ (RSV109)	$\overline{HDS1}$ (RSV100)	HCNTL0 (RSV106)	RSV56 (RSV62)	MDCLK	RSV08	V_{SS}					V_{SS}	CV_{DD}
P	HCNTL1 (RSV107)	V_{SS}	$\overline{HAS}$ (RSV108)	$\overline{RESET}$	MDIO	V_{SS}	CV_{DD}					CV_{DD}	V_{SS}
	1	2	3	4	5	6	7	8	9	10	11	12	13

Figure 1−4. DM641/DM640 Pin Map [Quadrant A]

14	15	16	17	18	19	20	21	22	23	24	25	26	
VP0CLK0	V_{SS}	VP0D[1]/ FSX0	VP0D[0]/ CLKX0	RSV09	V_{SS}	RSV76 (RSV82)	RSV80 (RSV86)	V_{SS}	RSV88 (RSV94)	RSV89 (RSV95)	DV_{DD}	V_{SS}	AF
V_{SS}	VP0D[6]/ CLKR0	VP0D[2]/ DX0	VP0CTL0	RSV10	V_{SS}	RSV78 (RSV84)	RSV82 (RSV88)	RSV84 (RSV90)	RSV87 (RSV93)	V_{SS}	DV_{DD}	DV_{DD}	AE
ACLKR0	VP0D[7]	VP0D[3]/ CLKS0	VP0CTL2	V_{SS}	RSV74 (RSV80)	RSV79 (RSV85)	RSV83 (RSV89)	RSV85 (RSV91)	RSV86 (RSV92)	DV_{DD}	RSV59 (RSV65)	RSV58 (RSV64)	AD
AFSR0	RSV11	VP0D[4]/ DR0	VP0CTL1	V_{SS}	RSV75 (RSV81)	RSV77 (RSV83)	RSV81 (RSV87)	V_{SS}	DV_{DD}	V_{SS}	RSV60 (RSV66)	RSV61 (RSV67)	AC
AHCLKR0	RSV12	VP0D[5]/ FSR0	DV_{DD}	V_{SS}	DV_{DD}	**DV_{DD}**	V_{SS}	DV_{DD}	RSV64 (RSV70)	RSV62 (RSV68)	RSV63 (RSV69)	V_{SS}	AB
V_{SS}	DV_{DD}	V_{SS}	V_{SS}	DV_{DD}	V_{SS}	CV_{DD}	CV_{DD}	V_{SS}	RSV67 (RSV73)	RSV65 (RSV71)	RSV66 (RSV72)	RSV68 (RSV74)	AA
CV_{DD}	V_{SS}	CV_{DD}	CV_{DD}	**V_{SS}**	CV_{DD}	CV_{DD}	CV_{DD}	DV_{DD}	RSV71 (RSV77)	RSV69 (RSV75)	RSV70 (RSV76)	RSV72 (RSV78)	Y
						CV_{DD}	V_{SS}	DV_{DD}	RSV73 (RSV79)	$\overline{AHOLD}$	DV_{DD}	V_{SS}	W
						V_{SS}	**DV_{DD}**	V_{SS}	AEA18	AEA21	AEA20	AEA19	V
						CV_{DD}	V_{SS}	DV_{DD}	AEA22	AEA17	AEA16	AEA15	U
						CV_{DD}	V_{SS}	RSV93 (RSV99)	RSV92 (RSV98)	AEA14	AEA13	V_{SS}	T
V_{SS}	CV_{DD}					V_{SS}	DV_{DD}	$\overline{ASOE3}$	AEA12	AEA11	RSV91 (RSV97)	RSV90 (RSV96)	R
CV_{DD}	V_{SS}					CV_{DD}	V_{SS}	ABUSREQ	AEA10	AEA9	DV_{DD}	AEA8	P
14	15	16	17	18	19	20	21	22	23	24	25	26	

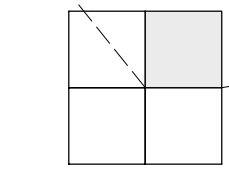

Figure 1−4. DM641/DM640 Pin Map (Continued) [Quadrant B]

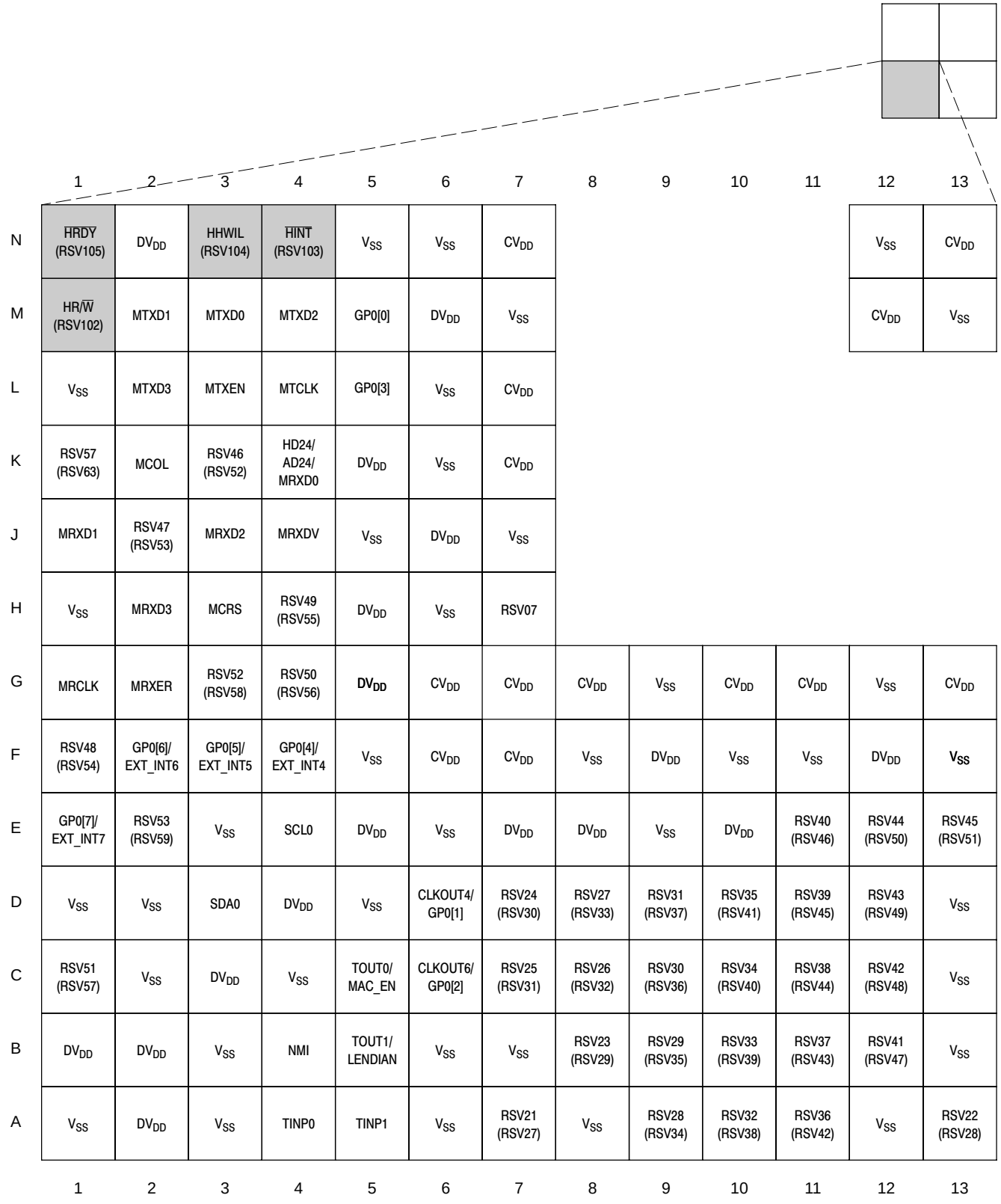

	1	2	3	4	5	6	7	8	9	10	11	12	13
N	$\overline{\text{HRDY}}$ (RSV105)	DV_{DD}	HHWIL (RSV104)	$\overline{\text{HINT}}$ (RSV103)	V_{SS}	V_{SS}	CV_{DD}					V_{SS}	CV_{DD}
M	HR/$\overline{\text{W}}$ (RSV102)	MTXD1	MTXD0	MTXD2	GP0[0]	DV_{DD}	V_{SS}					CV_{DD}	V_{SS}
L	V_{SS}	MTXD3	MTXEN	MTCLK	GP0[3]	V_{SS}	CV_{DD}						
K	RSV57 (RSV63)	MCOL	RSV46 (RSV52)	HD24/ AD24/ MRXD0	DV_{DD}	V_{SS}	CV_{DD}						
J	MRXD1	RSV47 (RSV53)	MRXD2	MRXDV	V_{SS}	DV_{DD}	V_{SS}						
H	V_{SS}	MRXD3	MCRS	RSV49 (RSV55)	DV_{DD}	V_{SS}	RSV07						
G	MRCLK	MRXER	RSV52 (RSV58)	RSV50 (RSV56)	DV_{DD}	CV_{DD}	CV_{DD}	CV_{DD}	V_{SS}	CV_{DD}	CV_{DD}	V_{SS}	CV_{DD}
F	RSV48 (RSV54)	GP0[6]/ EXT_INT6	GP0[5]/ EXT_INT5	GP0[4]/ EXT_INT4	V_{SS}	CV_{DD}	CV_{DD}	V_{SS}	DV_{DD}	V_{SS}	V_{SS}	DV_{DD}	V_{SS}
E	GP0[7]/ EXT_INT7	RSV53 (RSV59)	V_{SS}	SCL0	DV_{DD}	V_{SS}	DV_{DD}	DV_{DD}	V_{SS}	DV_{DD}	RSV40 (RSV46)	RSV44 (RSV50)	RSV45 (RSV51)
D	V_{SS}	V_{SS}	SDA0	DV_{DD}	V_{SS}	CLKOUT4/ GP0[1]	RSV24 (RSV30)	RSV27 (RSV33)	RSV31 (RSV37)	RSV35 (RSV41)	RSV39 (RSV45)	RSV43 (RSV49)	V_{SS}
C	RSV51 (RSV57)	V_{SS}	DV_{DD}	V_{SS}	TOUT0/ MAC_EN	CLKOUT6/ GP0[2]	RSV25 (RSV31)	RSV26 (RSV32)	RSV30 (RSV36)	RSV34 (RSV40)	RSV38 (RSV44)	RSV42 (RSV48)	V_{SS}
B	DV_{DD}	DV_{DD}	V_{SS}	NMI	TOUT1/ LENDIAN	V_{SS}	V_{SS}	RSV23 (RSV29)	RSV29 (RSV35)	RSV33 (RSV39)	RSV37 (RSV43)	RSV41 (RSV47)	V_{SS}
A	V_{SS}	DV_{DD}	V_{SS}	TINP0	TINP1	V_{SS}	RSV21 (RSV27)	V_{SS}	RSV28 (RSV34)	RSV32 (RSV38)	RSV36 (RSV42)	V_{SS}	RSV22 (RSV28)
	1	2	3	4	5	6	7	8	9	10	11	12	13

Figure 1−4. DM641/DM640 Pin Map (Continued) [Quadrant C]

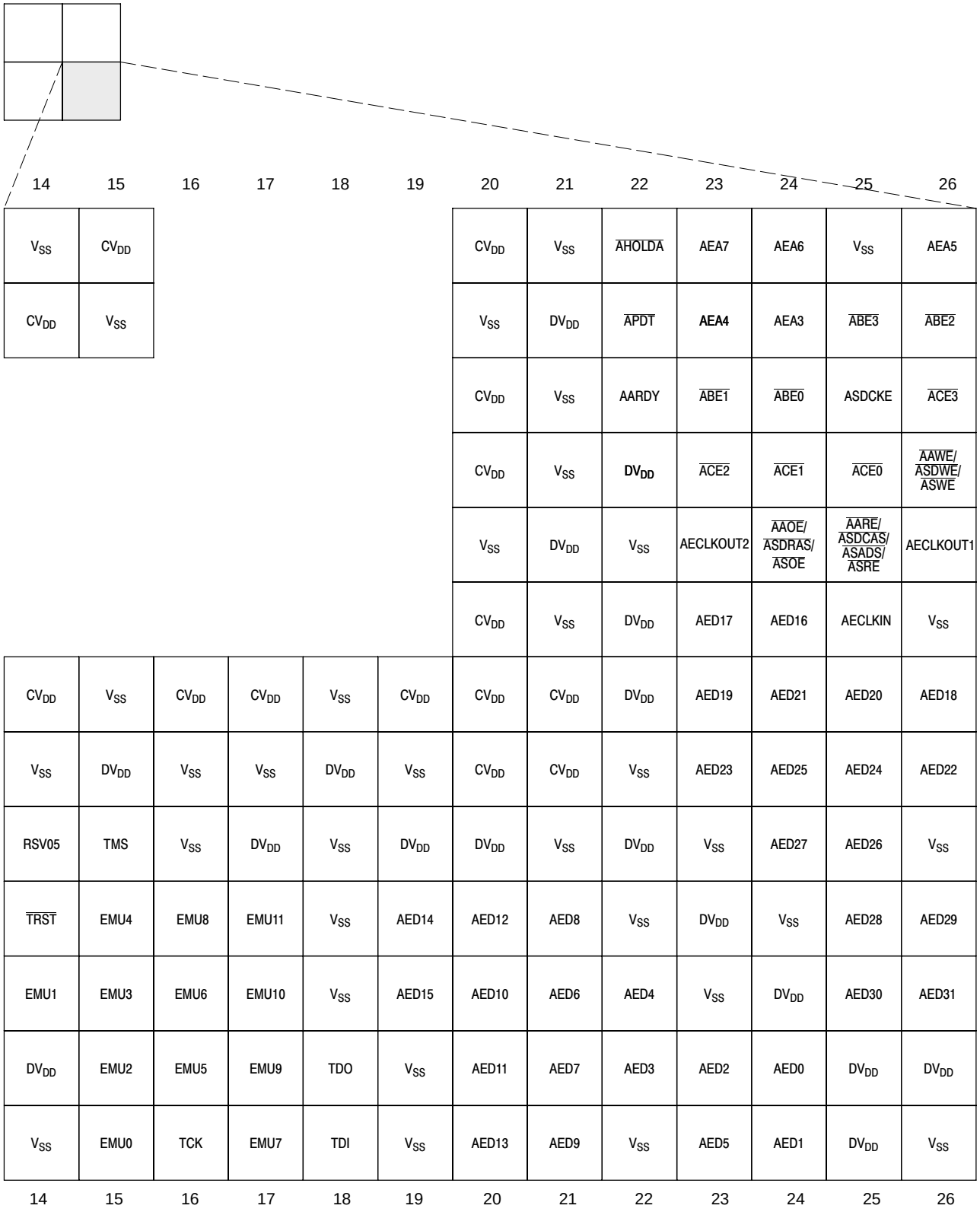

14	15	16	17	18	19	20	21	22	23	24	25	26	
V_{SS}	CV_{DD}					CV_{DD}	V_{SS}	$\overline{AHOLDA}$	AEA7	AEA6	V_{SS}	AEA5	N
CV_{DD}	V_{SS}					V_{SS}	DV_{DD}	$\overline{APDT}$	AEA4	AEA3	$\overline{ABE3}$	$\overline{ABE2}$	M
						CV_{DD}	V_{SS}	AARDY	$\overline{ABE1}$	$\overline{ABE0}$	ASDCKE	$\overline{ACE3}$	L
						CV_{DD}	V_{SS}	DV_{DD}	$\overline{ACE2}$	$\overline{ACE1}$	$\overline{ACE0}$	$\overline{AAWE}$/ $\overline{ASDWE}$/ $\overline{ASWE}$	K
						V_{SS}	DV_{DD}	V_{SS}	AECLKOUT2	$\overline{AAOE}$/ $\overline{ASDRAS}$/ $\overline{ASOE}$	$\overline{AARE}$/ $\overline{ASDCAS}$/ $\overline{AASADS}$/ $\overline{ASRE}$	AECLKOUT1	J
						CV_{DD}	V_{SS}	DV_{DD}	AED17	AED16	AECLKIN	V_{SS}	H
CV_{DD}	V_{SS}	CV_{DD}	CV_{DD}	V_{SS}	CV_{DD}	CV_{DD}	CV_{DD}	DV_{DD}	AED19	AED21	AED20	AED18	G
V_{SS}	DV_{DD}	V_{SS}	V_{SS}	DV_{DD}	V_{SS}	CV_{DD}	CV_{DD}	V_{SS}	AED23	AED25	AED24	AED22	F
RSV05	TMS	V_{SS}	DV_{DD}	V_{SS}	DV_{DD}	DV_{DD}	V_{SS}	DV_{DD}	V_{SS}	AED27	AED26	V_{SS}	E
$\overline{TRST}$	EMU4	EMU8	EMU11	V_{SS}	AED14	AED12	AED8	V_{SS}	DV_{DD}	V_{SS}	AED28	AED29	D
EMU1	EMU3	EMU6	EMU10	V_{SS}	AED15	AED10	AED6	AED4	V_{SS}	DV_{DD}	AED30	AED31	C
DV_{DD}	EMU2	EMU5	EMU9	TDO	V_{SS}	AED11	AED7	AED3	AED2	AED0	DV_{DD}	DV_{DD}	B
V_{SS}	EMU0	TCK	EMU7	TDI	V_{SS}	AED13	AED9	V_{SS}	AED5	AED1	DV_{DD}	V_{SS}	A
14	15	16	17	18	19	20	21	22	23	24	25	26	

Figure 1−4. DM641/DM640 Pin Map (Continued) [Quadrant D]

1.9.2 Signal Groups Description

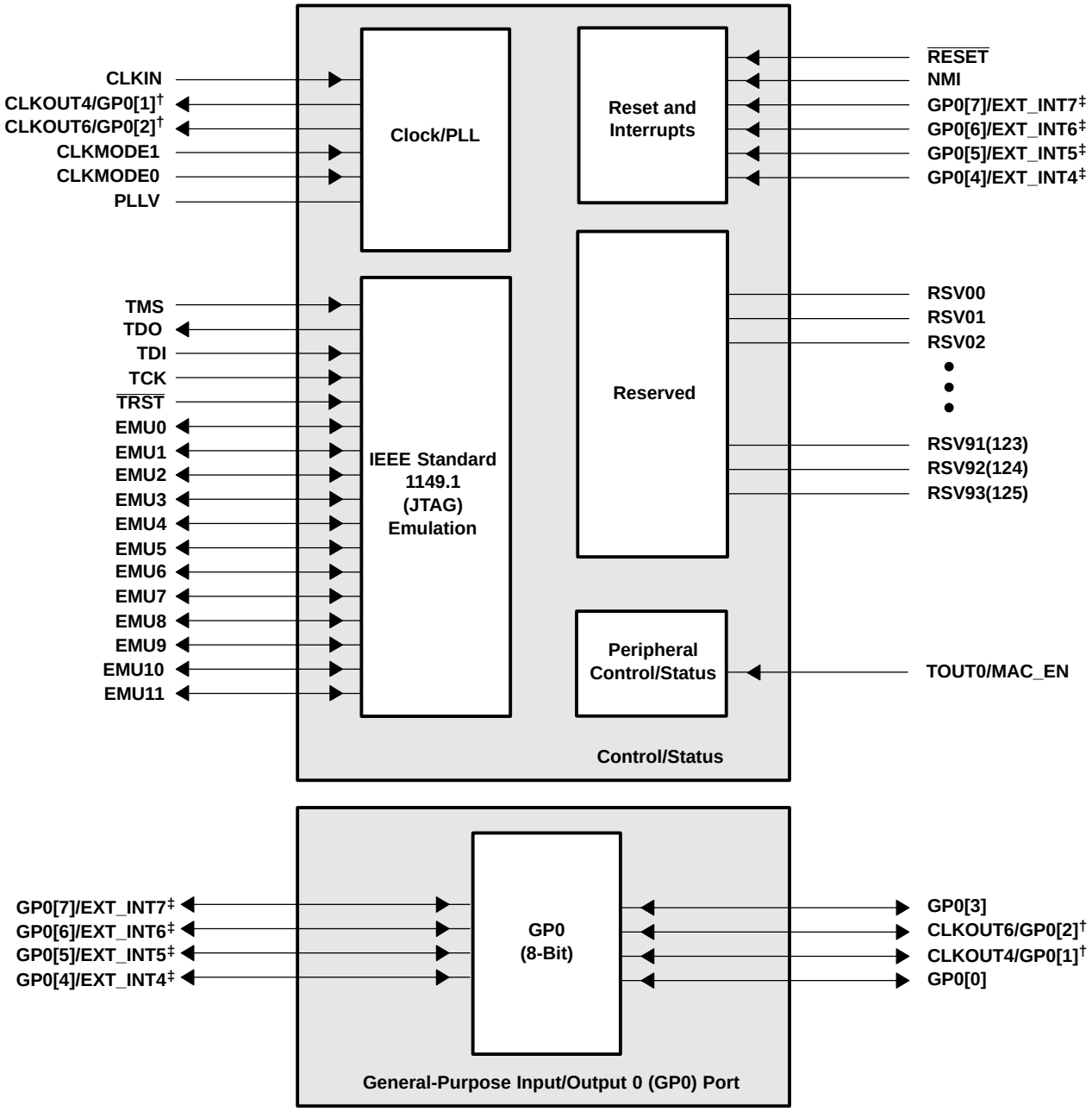

† These pins are muxed with the GP0 pins and by default these signals function as clocks (CLKOUT4 or CLKOUT6). To use these muxed pins as GPIO signals, the appropriate GPIO register bits (GPxEN and GPxDIR) must be properly enabled and configured. For more details, see the Device Configurations section of this data sheet.

‡ These pins are GP0 pins that can also function as external interrupt sources (EXT_INT[7:4]). Default after reset is EXT_INTx or GPIO as input-only.

Figure 1−5. CPU and Peripheral Signals

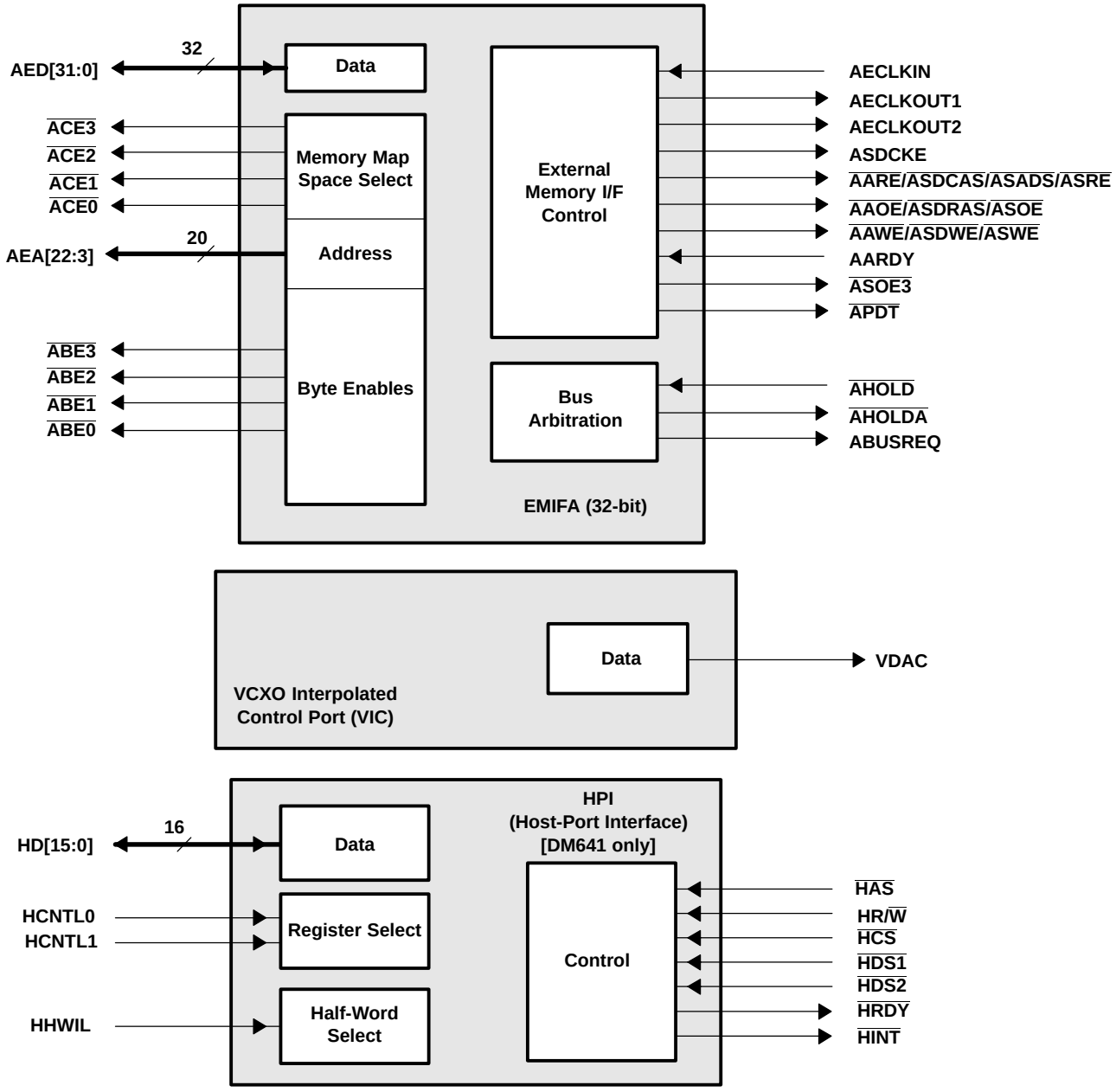

Figure 1−6. Peripheral Signals

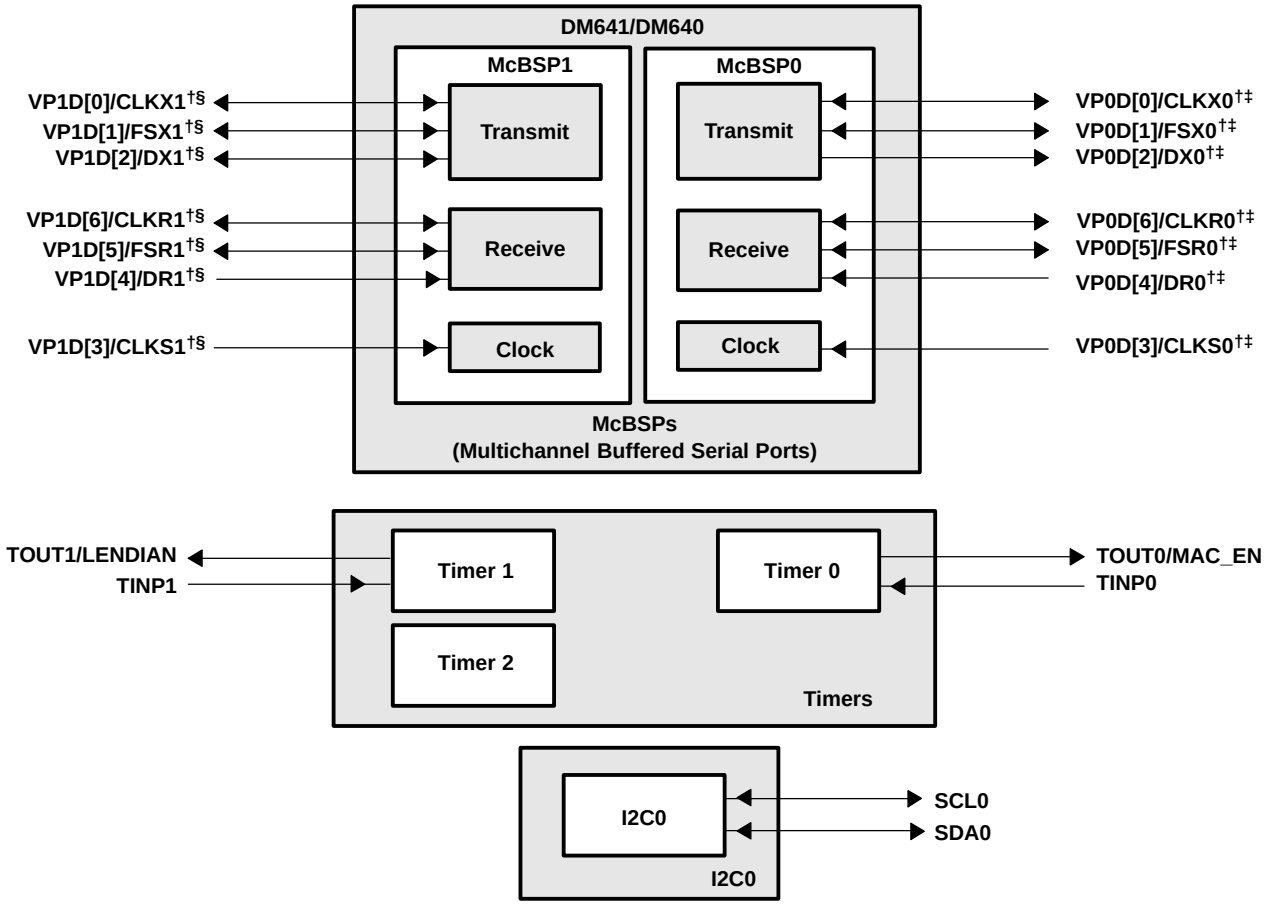

† For DM641, these McBSP1 and McBSP0 pins are muxed with the Video Port 1 (VP1) and Video Port 0 (VP0) peripherals, respectively. By default, these signals function as VP1 and VP0, respectively. For more details on these muxed pins, see the Device Configurations section of this data sheet.

‡ For DM640, these McBSP0 pins are muxed with the Video Port 0 (VP0) peripheral. By default, these signals function as VP0. For more details on these muxed pins, see the Device Configurations section of this data sheet.

§ The DM640 device does ***not*** support the VP1 peripheral; therefore, the McBSP1 peripheral pins are standalone perpheral functions, not muxed.

Figure 1−6. Peripheral Signals (Continued)

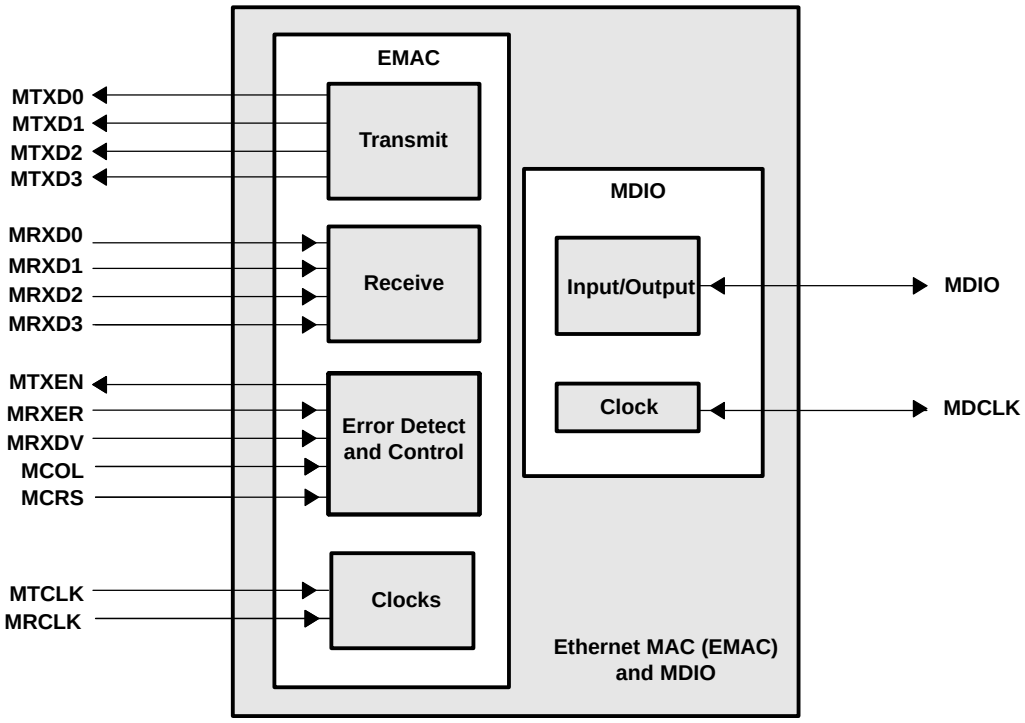

Figure 1−6. Peripheral Signals (Continued)

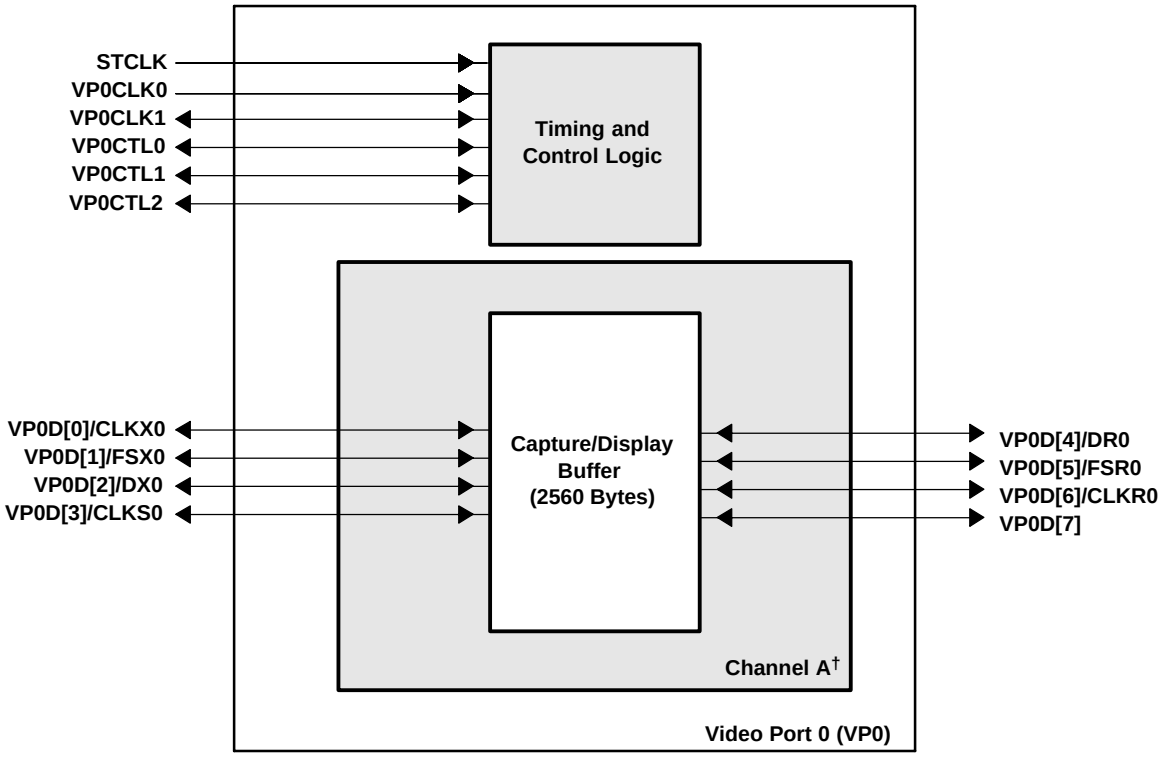

† Channel A supports: BT.656 (8-bit) display pipeline mode and BT.656 (8-bit) capture pipeline mode [TSI (8-bit) capture pipeline mode].

Figure 1−6. Peripheral Signals (Continued)

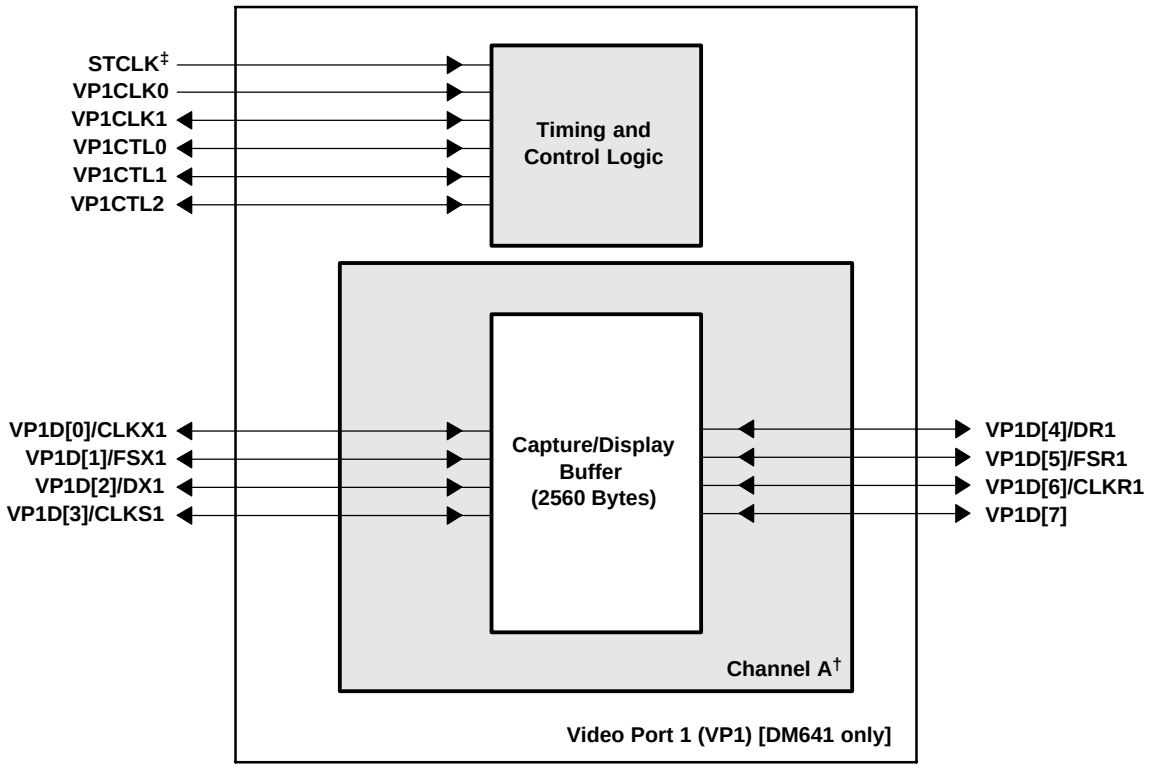

† Channel A supports: BT.656 (8-bit) display pipeline mode and BT.656 (8-bit) capture pipeline mode [TSI (8-bit) capture pipeline mode].
‡ For DM641, the same STCLK signal is used for both video ports (VP0 and VP1).

Figure 1−6. Peripheral Signals (Continued)

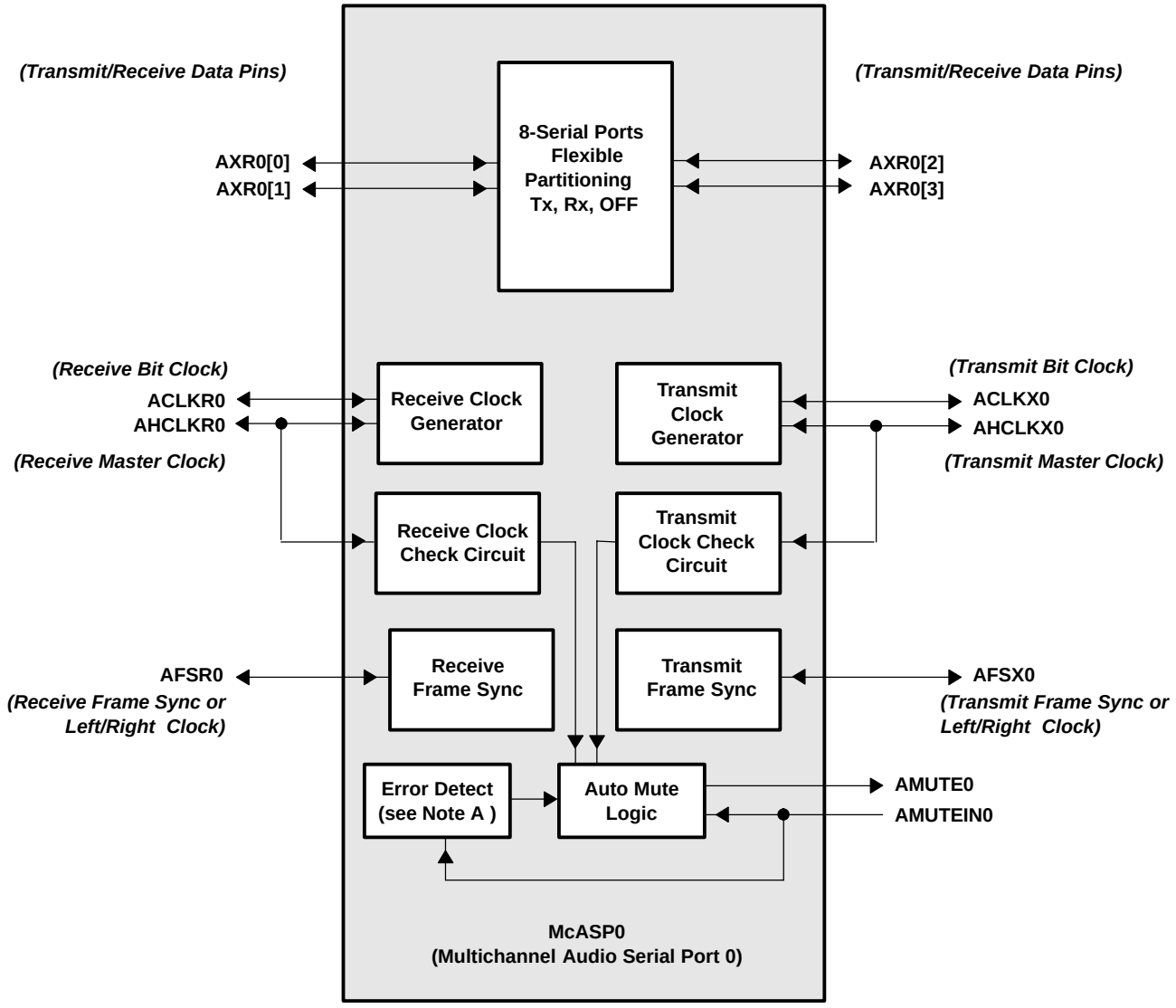

NOTES: A. The McASPs' Error Detect function detects underruns, overruns, early/late frame syncs, DMA errors, and external mute input.
B. Bolded and italicized text within parentheses denotes the function of the pins in an audio system.

Figure 1−6. Peripheral Signals (Continued)

1.9.3 Terminal Functions

The terminal functions table (Table 1−6) identifies the external signal names, the associated pin (ball) numbers along with the mechanical package designator, the pin type (I, O/Z, or I/O/Z), whether the pin has any internal pullup/pulldown resistors and a functional pin description. For more detailed information on device configuration, peripheral selection, multiplexed/shared pins, and debugging considerations, see the Device Configurations section of this data sheet.

Table 1−6. Terminal Functions

SIGNAL NAME	DM641	DM640	TYPE†	IPD/ IPU‡	DESCRIPTION
CLOCK/PLL CONFIGURATION					
CLKIN	AC2	AC2	I		Clock Input. This clock is the input to the on-chip PLL.
CLKOUT4/GP0[1]§	D6	D6	I/O/Z	IPU	Clock output at 1/4 of the device speed (**O/Z**) [default] or this pin can be programmed as a GP0 1 pin (**I/O/Z**).
CLKOUT6/GP0[2]§	C6	C6	I/O/Z	IPU	Clock output at 1/6 of the device speed (**O/Z**) [default] or this pin can be programmed as a GP0 2 pin (**I/O/Z**).
CLKMODE1	AE4	AE4	I	IPD	Clock mode select • Selects whether the CPU clock frequency = input clock frequency x1 (Bypass), x6, or x12. For more details on the CLKMODE pins and the PLL multiply factors, see the Clock PLL section of this data sheet.
CLKMODE0	AA2	AA2	I	IPD	
PLLV¶	V6	V6	A#		PLL voltage supply
JTAG EMULATION					
TMS	E15	E15	I	IPU	JTAG test-port mode select
TDO	B18	B18	O/Z	IPU	JTAG test-port data out
TDI	A18	A18	I	IPU	JTAG test-port data in
TCK	A16	A16	I	IPU	JTAG test-port clock
$\overline{\text{TRST}}$	D14	D14	I	IPD	JTAG test-port reset. For IEEE 1149.1 JTAG compatibility, see the IEEE 1149.1 JTAG compatibility statement portion of this data sheet.
EMU11	D17	D17	I/O/Z	IPU	Emulation pin 11. Reserved for future use, leave unconnected.
EMU10	C17	C17	I/O/Z	IPU	Emulation pin 10. Reserved for future use, leave unconnected.
EMU9	B17	B17	I/O/Z	IPU	Emulation pin 9. Reserved for future use, leave unconnected.
EMU8	D16	D16	I/O/Z	IPU	Emulation pin 8. Reserved for future use, leave unconnected.
EMU7	A17	A17	I/O/Z	IPU	Emulation pin 7. Reserved for future use, leave unconnected.
EMU6	C16	C16	I/O/Z	IPU	Emulation pin 6. Reserved for future use, leave unconnected.
EMU5	B16	B16	I/O/Z	IPU	Emulation pin 5. Reserved for future use, leave unconnected.
EMU4	D15	D15	I/O/Z	IPU	Emulation pin 4. Reserved for future use, leave unconnected.
EMU3	C15	C15	I/O/Z	IPU	Emulation pin 3. Reserved for future use, leave unconnected.
EMU2	B15	B15	I/O/Z	IPU	Emulation pin 2. Reserved for future use, leave unconnected.
EMU1	C14	C14	I/O/Z	IPU	Emulation pin 1‖
EMU0	A15	A15	I/O/Z	IPU	Emulation pin 0‖

† I = Input, O = Output, Z = High impedance, S = Supply voltage, GND = Ground

‡ IPD = Internal pulldown, IPU = Internal pullup. (These IPD/IPU signal pins feature a 30-kΩ IPD or IPU resistor. To pull up a signal to the opposite supply rail, a 1-kΩ resistor should be used.)

§ These pins are multiplexed pins. For more details, see the Device Configurations section of this data sheet.

¶ PLLV is not part of external voltage supply. See the Clock PLL section for information on how to connect this pin.

A = Analog signal (PLL Filter)

‖ The EMU0 and EMU1 pins are internally pulled up with 30-kΩ resistors; therefore, for emulation and normal operation, no external pullup/pulldown resistors are necessary. However, for boundary scan operation, pull down the EMU1 and EMU0 pins with a dedicated 1-kΩ resistor.

Table 1−6. Terminal Functions (Continued)

SIGNAL NAME	SIGNAL DM641	SIGNAL DM640	TYPE†	IPD/ IPU‡	DESCRIPTION
RESETS, INTERRUPTS, AND GENERAL-PURPOSE INPUT/OUTPUTS					
$\overline{\text{RESET}}$	P4	P4	I		Device reset
NMI	B4	B4	I	IPD	Nonmaskable interrupt, edge-driven (rising edge) **Note:** Any noise on the NMI pin may trigger an NMI interrupt; therefore, if the NMI pin is not used, it is recommended that the NMI pin be grounded versus relying on the IPD.
GP0[7]/EXT_INT7	E1	E1	I/O/Z	IPU	General-purpose input/output (GPIO) pins (**I/O/Z**) or external interrupts (**input only**). The default after reset setting is GPIO enabled as input-only. • When these pins function as External Interrupts [by selecting the corresponding interrupt enable register bit (IER.[7:4])], they are edge-driven and the polarity can be independently selected via the External Interrupt Polarity Register bits (EXTPOL.[3:0]).
GP0[6]/EXT_INT6	F2	F2	I/O/Z	IPU	
GP0[5]/EXT_INT5	F3	F3	I/O/Z	IPU	
GP0[4]/EXT_INT4	F4	F4	I/O/Z	IPU	
GP0[3]	L5	L5	I/O/Z	IPD	The general-purpose 0 pin (GP0[3]) (**I/O/Z**).
GP0[0]	M5	M5	I/O/Z	IPD	GP0 0 pin (**I/O/Z**) [default] This pin can be programmed as GPIO 0 (**input only**) [default] or as GP0[0] (**output only**) pin or output as a general-purpose interrupt (GP0INT) signal (**output only**). **Note:** This pin ***must*** remain low during device reset.
CLKOUT6/ GP0[2]§	C6	C6	I/O/Z	IPU	Clock output at 1/6 of the device speed (**O/Z**) [default] or this pin can be programmed as a GP0 2 pin (**I/O/Z**).
CLKOUT4/ GP0[1]§	D6	D6	I/O/Z	IPU	Clock output at 1/4 of the device speed (**O/Z**) [default] or this pin can be programmed as a GP0 1 pin (**I/O/Z**).
HOST-PORT INTERFACE (HPI) [DM641 ONLY]					
$\overline{\text{HINT}}$	N4	—	I/O/Z		Host interrupt from DSP to host (**O**) [default]
HCNTL1	P1	—	I/O/Z		Host control − selects between control, address, or data registers (**I**) [default]
HCNTL0	R3	—	I/O/Z		Host control − selects between control, address, or data registers (**I**) [default]
HHWIL	N3	—	I/O/Z		Host half-word select − first or second half-word (not necessarily high or low order) [For HPI16 bus width selection only] (**I**) [default]
HR/$\overline{\text{W}}$	M1	—	I/O/Z		Host read or write select (**I**) [default]
$\overline{\text{HAS}}$	P3	—	I/O/Z		Host address strobe (**I**) [default]
$\overline{\text{HCS}}$	R1	—	I/O/Z		Host chip select (**I**) [default]
$\overline{\text{HDS1}}$	R2	—	I/O/Z		Host data strobe 1 (**I**) [default]
$\overline{\text{HDS2}}$	T2	—	I/O/Z		Host data strobe 2 (**I**) [default]
$\overline{\text{HRDY}}$	N1	—	I/O/Z		Host ready from DSP to host (**O**) [default]

† I = Input, O = Output, Z = High impedance, S = Supply voltage, GND = Ground

‡ IPD = Internal pulldown, IPU = Internal pullup. (These IPD/IPU signal pins feature a 30-kΩ IPD or IPU resistor. To pull up a signal to the opposite supply rail, a 1-kΩ resistor should be used.)

§ These pins are multiplexed pins. For more details, see the Device Configurations section of this data sheet.

Table 1−6. Terminal Functions (Continued)

SIGNAL NAME	SIGNAL DM641	SIGNAL DM640	TYPE†	IPD/ IPU‡	DESCRIPTION
HOST-PORT INTERFACE (HPI) [DM641 ONLY] (CONTINUED)					
HD15	T3	—	I/O/Z		Host-port data (**I/O/Z**) [DM641 Only] As HPI data bus • Used for transfer of data, address, and control For proper DM641 device operation, the HD5 pin at device reset ***must*** be pulldown via a 10-kΩ resistor.
HD14	U1	—			
HD13	U3	—			
HD12	U2	—			
HD11	U4	—			
HD10	V1	—			
HD9	V3	—			
HD8	V2	—			
HD7	W2	—			
HD6	W4	—			
HD5	Y1	—			
HD4	W3	—			
HD3	Y2	—			
HD2	Y4	—			
HD1	AA1	—			
HD0	Y3	—			
EMIFA (32-BIT) − CONTROL SIGNALS COMMON TO ALL TYPES OF MEMORY					
$\overline{\text{ACE3}}$	L26	L26	O/Z	IPU	EMIFA memory space enables • Enabled by bits 28 through 31 of the word address • Only one pin is asserted during any external data access
$\overline{\text{ACE2}}$	K23	K23	O/Z	IPU	
$\overline{\text{ACE1}}$	K24	K24	O/Z	IPU	
$\overline{\text{ACE0}}$	K25	K25	O/Z	IPU	
$\overline{\text{ABE3}}$	M25	M25	O/Z	IPU	EMIFA byte-enable control • Decoded from the low-order address bits. The number of address bits or byte enables used depends on the width of external memory. • Byte-write enables for most types of memory • Can be directly connected to SDRAM read and write mask signal (SDQM)
$\overline{\text{ABE2}}$	M26	M26	O/Z	IPU	
$\overline{\text{ABE1}}$	L23	L23	O/Z	IPU	
$\overline{\text{ABE0}}$	L24	L24	O/Z	IPU	
$\overline{\text{APDT}}$	M22	M22	O/Z	IPU	EMIFA peripheral data transfer, allows direct transfer between external peripherals

† I = Input, O = Output, Z = High impedance, S = Supply voltage, GND = Ground

‡ IPD = Internal pulldown, IPU = Internal pullup. (These IPD/IPU signal pins feature a 30-kΩ IPD or IPU resistor. To pull up a signal to the opposite supply rail, a 1-kΩ resistor should be used.)

§ These pins are multiplexed pins. For more details, see the Device Configurations section of this data sheet.

Table 1−6. Terminal Functions (Continued)

SIGNAL NAME	SIGNAL DM641	SIGNAL DM640	TYPE†	IPD/ IPU‡	DESCRIPTION
EMIFA (32-BIT) − BUS ARBITRATION					
$\overline{\text{AHOLDA}}$	N22	N22	O	IPU	EMIFA hold-request-acknowledge to the host
$\overline{\text{AHOLD}}$	W24	W24	I	IPU	EMIFA hold request from the host
ABUSREQ	P22	P22	O	IPU	EMIFA bus request output
EMIFA (32-BIT) − ASYNCHRONOUS/SYNCHRONOUS MEMORY CONTROL					
AECLKIN	H25	H25	I	IPD	EMIFA external input clock. The EMIFA input clock (AECLKIN, CPU/4 clock, or CPU/6 clock) is selected at reset via the pullup/pulldown resistors on the AEA[20:19] pins. AECLKIN is the default for the EMIFA input clock.
AECLKOUT2	J23	J23	O/Z	IPD	EMIFA output clock 2. Programmable to be EMIFA input clock (AECLKIN, CPU/4 clock, or CPU/6 clock) frequency divided-by-1, -2, or -4.
AECLKOUT1	J26	J26	O/Z	IPD	EMIFA output clock 1 [at EMIFA input clock (AECLKIN, CPU/4 clock, or CPU/6 clock) frequency].
$\overline{\text{AARE}}$/ $\overline{\text{ASDCAS}}$/ $\overline{\text{ASADS}}$/$\overline{\text{ASRE}}$	J25	J25	O/Z	IPU	EMIFA asynchronous memory read-enable/SDRAM column-address strobe/programmable synchronous interface-address strobe or read-enable • For programmable synchronous interface, the RENEN field in the CE Space Secondary Control Register (CExSEC) selects between $\overline{\text{ASADS}}$ and $\overline{\text{ASRE}}$: If RENEN = 0, then the $\overline{\text{ASADS}}$/$\overline{\text{ASRE}}$ signal functions as the $\overline{\text{ASADS}}$ signal. If RENEN = 1, then the $\overline{\text{ASADS}}$/$\overline{\text{ASRE}}$ signal functions as the $\overline{\text{ASRE}}$ signal.
$\overline{\text{AAOE}}$/ $\overline{\text{ASDRAS}}$/ $\overline{\text{ASOE}}$	J24	J24	O/Z	IPU	EMIFA asynchronous memory output-enable/SDRAM row-address strobe/programmable synchronous interface output-enable
$\overline{\text{AAWE}}$/ $\overline{\text{ASDWE}}$/ $\overline{\text{ASWE}}$	K26	K26	O/Z	IPU	EMIFA asynchronous memory write-enable/SDRAM write-enable/programmable synchronous interface write-enable
ASDCKE	L25	L25	O/Z	IPU	EMIFA SDRAM clock-enable (used for self-refresh mode). • If SDRAM is not in system, ASDCKE can be used as a general-purpose output.
$\overline{\text{ASOE3}}$	R22	R22	O/Z	IPU	EMIFA synchronous memory output-enable for $\overline{\text{ACE3}}$ (for glueless FIFO interface)
AARDY	L22	L22	I	IPU	Asynchronous memory ready input

† I = Input, O = Output, Z = High impedance, S = Supply voltage, GND = Ground

‡ IPD = Internal pulldown, IPU = Internal pullup. (These IPD/IPU signal pins feature a 30-kΩ IPD or IPU resistor. To pull up a signal to the opposite supply rail, a 1-kΩ resistor should be used.)

§ These pins are multiplexed pins. For more details, see the Device Configurations section of this data sheet.

Table 1−6. Terminal Functions (Continued)

SIGNAL NAME	SIGNAL DM641	SIGNAL DM640	TYPE†	IPD/ IPU‡	DESCRIPTION
EMIFA (32-BIT) − ADDRESS					
AEA22	U23	U23	O/Z	IPD	EMIFA external address (doubleword address) EMIFA address numbering for the DM641/DM640 devices start with AEA3 to maintain signal name compatibility with other C64x™ devices (e.g., C6414, C6415, and C6416) [see the 32-bit EMIF addressing scheme in the *TMS320C6000 DSP External Memory Interface (EMIF) Reference Guide* (literature number SPRU266)]. **Boot Configuration:** • Controls initialization of DSP modes at reset (**I**) via pullup/pulldown resistors − Boot mode (AEA[22:21]): 00 – No boot (default mode) 01 − HPI **[DM641 only]**; Reserved [**For DM640 device**] 10 − Reserved 11 − EMIFA 8−bit ROM boot − EMIF clock select − AEA[20:19]: Clock mode select for EMIFA (AECLKIN_SEL[1:0]) 00 – AECLKIN (default mode) 01 − CPU/4 Clock Rate 10 − CPU/6 Clock Rate 11 − Reserved For more details, see the Device Configurations section of this data sheet.
AEA21	V24	V24			
AEA20	V25	V25			
AEA19	V26	V26			
AEA18	V23	V23			
AEA17	U24	U24			
AEA16	U25	U25			
AEA15	U26	U26			
AEA14	T24	T24			
AEA13	T25	T25			
AEA12	R23	R23			
AEA11	R24	R24			
AEA10	P23	P23			
AEA9	P24	P24			
AEA8	P26	P26			
AEA7	N23	N23			
AEA6	N24	N24			
AEA5	N26	N26			
AEA4	M23	M23			
AEA3	M24	M24			
EMIFA (32-BIT) − DATA					
AED31	C26	C26	I/O/Z	IPU	EMIFA external data
AED30	C25	C25			
AED29	D26	D26			
AED28	D25	D25			
AED27	E24	E24			
AED26	E25	E25			
AED25	F24	F24			
AED24	F25	F25			
AED23	F23	F23			
AED22	F26	F26			
AED21	G24	G24			
AED20	G25	G25			
AED19	G23	G23			
AED18	G26	G26			
AED17	H23	H23			
AED16	H24	H24			
AED15	C19	C19			
AED14	D19	D19			

† I = Input, O = Output, Z = High impedance, S = Supply voltage, GND = Ground

‡ IPD = Internal pulldown, IPU = Internal pullup. (These IPD/IPU signal pins feature a 30-kΩ IPD or IPU resistor. To pull up a signal to the opposite supply rail, a 1-kΩ resistor should be used.)

§ These pins are multiplexed pins. For more details, see the Device Configurations section of this data sheet.

Table 1−6. Terminal Functions (Continued)

SIGNAL NAME	SIGNAL DM641	SIGNAL DM640	TYPE†	IPD/ IPU‡	DESCRIPTION
EMIFA (32-BIT) − DATA (CONTINUED)					
AED13	A20	A20	I/O/Z	IPU	EMIFA external data
AED12	D20	D20			
AED11	B20	B20			
AED10	C20	C20			
AED9	A21	A21			
AED8	D21	D21			
AED7	B21	B21			
AED6	C21	C21			
AED5	A23	A23			
AED4	C22	C22			
AED3	B22	B22			
AED2	B23	B23			
AED1	A24	A24			
AED0	B24	B24			
MANAGEMENT DATA INPUT/OUTPUT (MDIO)					
MDCLK	R5	R5	I/O/Z	IPD	MDIO serial clock input/output (**I/O/Z**).
MDIO	P5	P5	I/O/Z	IPU	MDIO serial data input/output (**I/O/Z**).
VCX0 INTERPOLATED CONTROL PORT (VIC)					
VDAC	AD1	AD1	O/Z	IPD	VCXO Interpolated Control Port (VIC) single-bit digital-to-analog converter (VDAC) output [**output only**].
VIDEO PORTS (VP0 [DM641/DM640] AND VP1 [DM641 ONLY])					
STCLK	AC1	AC1	I	IPD	The STCLK signal drives the hardware counter on the video ports.
8-BIT VIDEO PORT 1 (VP1) [DM641 ONLY]					
VP1D[7]	AC8	—	I/O/Z	IPD	Video port 1 (VP1) data input/output (**I/O/Z**) or McBSP1 data input/output (**I/O/Z**) [default] [DM641 only] *** – The DM640 device does ***not*** support the VP1 peripheral; therefore, the McBSP1 peripheral pins are standalone peripheral functions, not muxed. For more details on the McBSP1 pin functions [for both the DM641 and DM640 devices], see *McBSP1* section of this table and the Device Configurations section of this data sheet.
VP1D[6]/CLKR1§	AD8	***			
VP1D[5]/FSR1§	AC7	***			
VP1D[4]/DR1§	AD7	***			
VP1D[3]/CLKS1§	AE7	***			
VP1D[2]/DX1§	AC6	***			
VP1D[1]/FSX1§	AD6	***			
VP1D[0]/CLKX1§	AE6	***			
VP1CLK1	AF10	—	I/O/Z	IPD	VP1 clock 1 (**I/O/Z**)
VP1CLK0	AF8	—	I	IPD	VP1 clock 0 (**I**)
VP1CTL2	AD5	—	I/O/Z	IPD	VP1 control 2 (**I/O/Z**)
VP1CTL1	AE5	—			VP1 control 1 (**I/O/Z**)
VP1CTL0	AF4	—			VP1 control 0 (**I/O/Z**)

† I = Input, O = Output, Z = High impedance, S = Supply voltage, GND = Ground

‡ IPD = Internal pulldown, IPU = Internal pullup. (These IPD/IPU signal pins feature a 30-kΩ IPD or IPU resistor. To pull up a signal to the opposite supply rail, a 1-kΩ resistor should be used.)

§ These pins are multiplexed pins. For more details, see the Device Configurations section of this data sheet.

Table 1−6. Terminal Functions (Continued)

SIGNAL NAME	DM641	DM640	TYPE†	IPD/ IPU‡	DESCRIPTION
8-BIT VIDEO PORT 0 (VP0) [DM641 AND DM640]					
VP0D[7]	AD15	AD15	I/O/Z	IPD	Video port 0 (VP0) data input/output (**I/O/Z**) or McBSP0 data input/output (**I/O/Z**) [default] For more details on the McBSP0 pin functions, see *McBSP0* section of this table and the Device Configurations section of this data sheet.
VP0D[6]/CLKR0§	AE15	AE15			
VP0D[5]/FSR0§	AB16	AB16			
VP0D[4]/DR0§	AC16	AC16			
VP0D[3]/CLKS0§	AD16	AD16			
VP0D[2]/DX0§	AE16	AE16			
VP0D[1]/FSX0§	AF16	AF16			
VP0D[0]/CLKX0§	AF17	AF17			
VP0CLK1	AF12	AF12	I/O/Z	IPD	VP0 clock 1 (**I/O/Z**)
VP0CLK0	AF14	AF14	I	IPD	VP0 clock 0 (**I**)
VP0CTL2	AD17	AD17	I/O/Z	IPD	VP0 control 2 (**I/O/Z**)
VP0CTL1	AC17	AC17			VP0 control 1 (**I/O/Z**)
VP0CTL0	AE17	AE17			VP0control 0 (**I/O/Z**)
TIMER 2					
	—	—			No external pins. The timer 2 peripheral pins are ***not*** pinned out as external pins.
TIMER 1					
TOUT1/LENDIAN	B5	B5	O/Z	IPU	Timer 1 output (**O/Z**) **Boot Configuration:** Device endian mode [LENDIAN] (**I**). Controls initialization of DSP modes at reset via pullup/pulldown resistors − Device Endian mode 0 – Big Endian 1 − Little Endian (default) For more details on LENDIAN, see the Device Configurations section of this data sheet.
TINP1	A5	A5	I	IPD	Timer 1 or general-purpose input
TIMER 0					
TOUT0/MAC_EN	C5	C5	O/Z	IPD	Timer 0 output (**O/Z**) **Boot Configuration:** MAC enable pin [MAC_EN] (**I**) The MAC_EN pin controls the selection (enable/disable) of the EMAC and MDIO peripherals. For more details, see the Device Configurations section of this data sheet.
TINP0	A4	A4	I	IPD	Timer 0 or general-purpose input
INTER-INTEGRATED CIRCUIT 0 (I2C0)					
SCL0	E4	E4	I/O/Z	—	I2C0 clock.
SDA0	D3	D3	I/O/Z	—	I2C0 data.

† I = Input, O = Output, Z = High impedance, S = Supply voltage, GND = Ground

‡ IPD = Internal pulldown, IPU = Internal pullup. (These IPD/IPU signal pins feature a 30-kΩ IPD or IPU resistor. To pull up a signal to the opposite supply rail, a 1-kΩ resistor should be used.)

§ These pins are multiplexed pins. For more details, see the Device Configurations section of this data sheet.

Table 1−6. Terminal Functions (Continued)

SIGNAL NAME	SIGNAL DM641	SIGNAL DM640	TYPE†	IPD/ IPU‡	DESCRIPTION
MULTICHANNEL BUFFERED SERIAL PORT 1 (McBSP1) [DM641 ONLY]					
VP1D[6]/CLKR1§	AD8	—	I/O/Z	IPD	Video Port 1 (VP1) input/output data 6 pin (**I/O/Z**) or McBSP1 receive clock (**I/O/Z**) [default]
VP1D[5]/FSR1§	AC7	—	I/O/Z	IPD	VP1 input/output data 5 pin (**I/O/Z**) or McBSP1 receive frame sync (**I/O/Z**) [default]
VP1D[4]/DR1§	AD7	—	I	IPD	VP1 input/output data 4 pin (**I/O/Z**) or McBSP1 receive data (**I**) [default]
VP1D[3]/CLKS1§	AE7	—	I	IPD	VP1 input/output data 3 pin (**I/O/Z**) or McBSP1 external clock source (**I**) (as opposed to internal) [default]
VP1D[2]/DX1§	AC6	—	I/O/Z	IPD	VP1 input/output data 2 pin (**I/O/Z**) or McBSP1 transmit data (**O/Z**) [default]
VP1D[1]/FSX1§	AD6	—	I/O/Z	IPD	VP1 input/output data 1 pin (**I/O/Z**) or McBSP1 transmit frame sync (**I/O/Z**) [default]
VP1D[0]/CLKX1§	AE6	—	I/O/Z	IPD	VP1 input/output data 0 pin (**I/O/Z**) or McBSP1 transmit clock (**I/O/Z**) [default]
MULTICHANNEL BUFFERED SERIAL PORT 1 (McBSP1) [DM640 ONLY]					
CLKR1	—	AD8	I/O/Z	IPD	McBSP1 receive clock (**I/O/Z**)
FSR1	—	AC7	I/O/Z	IPD	McBSP1 receive frame sync (**I/O/Z**)
DR1	—	AD7	I	IPD	McBSP1 receive data (**I**)
CLKS1	—	AE7	I	IPD	McBSP1 external clock source (**I**) (as opposed to internal)
DX1	—	AC6	I/O/Z	IPD	McBSP1 transmit data (**O/Z**)
FSX1	—	AD6	I/O/Z	IPD	McBSP1 transmit frame sync (**I/O/Z**)
CLKX1	—	AE6	I/O/Z	IPD	McBSP1 transmit clock (**I/O/Z**)
MULTICHANNEL BUFFERED SERIAL PORT 0 (McBSP0)					
VP0D[6]/CLKR0§	AE15	AE15	I/O/Z	IPD	Video Port 0 (VP0) input/output data 6 pin (**I/O/Z**) or McBSP0 receive clock (**I/O/Z**) [default]
VP0D[5]/FSR0§	AB16	AB16	I/O/Z	IPD	VP0 input/output data 5 pin (**I/O/Z**) or McBSP0 receive frame sync (**I/O/Z**) [default]
VP0D[4]/DR0§	AC16	AC16	I	IPD	VP0 input/output data 4 pin (**I/O/Z**) or McBSP0 receive data (**I**) [default]
VP0D[3]/CLKS0§	AD16	AD16	I	IPD	VP0 input/output data 3 pin (**I/O/Z**) or McBSP0 external clock source (**I**) (as opposed to internal) [default]
VP0D[2]/DX0§	AE16	AE16	O/Z	IPD	VP0 input/output data 2 pin (**I/O/Z**) or McBSP0 transmit data (**O/Z**) [default]
VP0D[1]/FSX0§	AF16	AF16	I/O/Z	IPD	VP0 input/output data 1 pin (**I/O/Z**) or McBSP0 transmit frame sync (**I/O/Z**) [default]
VP0D[0]/CLKX0§	AF17	AF17	I/O/Z	IPD	VP0 input/output data 0 pin (**I/O/Z**) or McBSP0 transmit clock (**I/O/Z**) [default]

† I = Input, O = Output, Z = High impedance, S = Supply voltage, GND = Ground

‡ IPD = Internal pulldown, IPU = Internal pullup. (These IPD/IPU signal pins feature a 30-kΩ IPD or IPU resistor. To pull up a signal to the opposite supply rail, a 1-kΩ resistor should be used.)

§ These pins are multiplexed pins. For more details, see the Device Configurations section of this data sheet.

Table 1−6. Terminal Functions (Continued)

SIGNAL NAME	DM641	DM640	TYPE†	IPD/ IPU‡	DESCRIPTION
ETHERNET MAC (EMAC)					
MRCLK	G1	G1	I		EMAC Media Independent I/F (MII) data, clocks, and control pins for Transmit/Receive. MII transmit clock (MTCLK), Transmit clock source from the attached PHY. MII transmit data (MTXD[3:0]), Transmit data nibble synchronous with transmit clock (MTCLK). MII transmit enable (MTXEN), This signal indicates a valid transmit data on the transmit data pins (MTDX[3:0]). MII collision sense (MCOL) Assertion of this signal during half-duplex operation indicates network collision. During full-duplex operation, transmission of new frames will not begin if this pin is asserted. MII carrier sense (MCRS) Indicates a frame carrier signal is being received. MII receive data (MRXD[3:0]), Receive data nibble synchronous with receive clock (MRCLK). MII receive clock (MRCLK), Receive clock source from the attached PHY. MII receive data valid (MRXDV), This signal indicates a valid data nibble on the receive data pins (MRDX[3:0]). MII receive error (MRXER), Indicates reception of a coding error on the receive data.
MRCRS	H3	H3	I		
MRXER	G2	G2	I		
MRXDV	J4	J4	I		
MRXD3	H2	H2	I		
MRXD2	J3	J3	I		
MRXD1	J1	J1	I		
MRXD0	K4	K4	I		
MTCLK	L4	L4	I		
MCOL	K2	K2	I		
MTXEN	L3	L3	O/Z		
MTXD3	L2	L2	O/Z		
MTXD2	M4	M4	O/Z		
MTXD1	M2	M2	O/Z		
MTXD0	M3	M3	O/Z		
MULTICHANNEL AUDIO SERIAL PORT 0 (McASP0) CONTROL					
AHCLKX0	AC12	AC12	I/O/Z	IPD	McASP0 transmit high-frequency master clock (I/O/Z).
AFSX0	AD12	AD12	I/O/Z	IPD	McASP0 transmit frame sync or left/right clock (LRCLK) (I/O/Z).
ACLKX0	AB13	AB13	I/O/Z	IPD	McASP0 transmit bit clock (I/O/Z).
AMUTE0	AC13	AC13	O/Z	IPD	McASP0 mute output (O/Z).
AMUTEIN0	AD13	AD13	I/O/Z	IPD	McASP0 mute input (I/O/Z).
AHCLKR0	AB14	AB14	I/O/Z	IPD	McASP0 receive high-frequency master clock (I/O/Z).
AFSR0	AC14	AC14	I/O/Z	IPD	McASP0 receive frame sync or left/right clock (LRCLK) (I/O/Z).
ACLKR0	AD14	AD14	I/O/Z	IPD	McASP0 receive bit clock (I/O/Z).
MULTICHANNEL AUDIO SERIAL PORT 0 (McASP0) DATA					
AXR0[3]	AE11	AE11	I/O/Z	IPD	McASP0 TX/RX data pins [3:0] (I/O/Z).
AXR0[2]	AC10	AC10			
AXR0[1]	AD10	AD10			
AXR0[0]	AC9	AC9			

† I = Input, O = Output, Z = High impedance, S = Supply voltage, GND = Ground

‡ IPD = Internal pulldown, IPU = Internal pullup. (These IPD/IPU signal pins feature a 30-kΩ IPD or IPU resistor. To pull up a signal to the opposite supply rail, a 1-kΩ resistor should be used.)

§ These pins are multiplexed pins. For more details, see the Device Configurations section of this data sheet.

Table 1−6. Terminal Functions (Continued)

SIGNAL NAME	SIGNAL DM641	SIGNAL DM640	TYPE†	IPD/ IPU‡	DESCRIPTION
RESERVED FOR TEST					
RSV	E2	E2	I	IPD	Reserved. For proper DM641/DM640 device operation, this pin at device reset ***must*** be pulled down via a 10-kΩ resistor.
RSV	—	Y1	I/O/Z	—	Reserved [for DM640 Only]. For proper DM640 device operation, this pin at device reset ***must*** be pulled down via a 10-kΩ resistor.
RSV	H7	H7	A	—	Reserved. This pin must be connected directly to CV_{DD} for proper device operation.
RSV	R6	R6	A	—	Reserved. This pin must be connected directly to DV_{DD} for proper device operation.
ADDITIONAL RESERVED FOR TEST					
RSV	A7	A7	I	IPD	Reserved (leave unconnected, ***do not*** connect to power or ground)
	A9	A9	I/O/Z	IPD	
	A10	A10	I/O/Z	IPD	
	A11	A11	I/O/Z	IPD	
	A13	A13	I/O/Z	IPD	
	B8	B8	I/O/Z	IPD	
	B9	B9	I/O/Z	IPD	
	B10	B10	I/O/Z	IPD	
	B11	B11	I/O/Z	IPD	
	B12	B12	I/O/Z	IPD	
	C1	C1	I/O/Z	—	Pull down via a 10-kΩ resistor
	C7	C7	I/O/Z	IPD	Reserved (leave unconnected, ***do not*** connect to power or ground)
	C8	C8	I/O/Z	IPD	
	C9	C9	I/O/Z	IPD	
	C10	C10	I/O/Z	IPD	
	C11	C11	I/O/Z	IPD	
	C12	C12	I/O/Z	IPD	
	D7	D7	I/O/Z	IPD	
	D8	D8	I/O/Z	IPD	
	D9	D9	I/O/Z	IPD	
	D10	D10	I/O/Z	IPD	
	D11	D11	I/O/Z	IPD	
	D12	D12	I/O/Z	IPD	
	E11	E11	I/O/Z	IPD	
	E12	E12	I/O/Z	IPD	
	E13	E13	I/O/Z	IPD	
	E14	E14	I	IPD	
	F1	F1	I/O/Z	—	Pull down via a 10-kΩ resistor
	G3	G3	I/O/Z	—	
	G4	G4	I/O/Z	—	
	H4	H4	I/O/Z	—	

† I = Input, O = Output, Z = High impedance, S = Supply voltage, GND = Ground

‡ IPD = Internal pulldown, IPU = Internal pullup. (These IPD/IPU signal pins feature a 30-kΩ IPD or IPU resistor. To pull up a signal to the opposite supply rail, a 1-kΩ resistor should be used.)

Table 1−6. Terminal Functions (Continued)

SIGNAL			TYPE†	IPD/ IPU‡	DESCRIPTION
NAME	DM641	DM640			
RSV	J2	J2	I/O/Z	—	Pull down via a 10-kΩ resistor
	K1	K1	I/O/Z	—	
	K3	K3	I/O/Z	—	
	R4	R4	I	IPU	Reserved (leave unconnected, ***do not*** connect to power or ground)
	R25	R25	O/Z	IPU	
	R26	R26	O/Z	IPU	
	T4	T4	O	IPD	
	T22	T22	O/Z	IPU	
	T23	T23	O/Z	IPU	
	V4	V4	I/O/Z	—	Pull down via a 10-kΩ resistor
	W7	W7	A	—	Reserved (leave unconnected, ***do not*** connect to power or ground)
	W23	W23	I/O/Z	IPU	
	Y23	Y23	I/O/Z	IPU	
	Y24	Y24	I/O/Z	IPU	
	Y25	Y25	I/O/Z	IPU	
	Y26	Y26	I/O/Z	IPU	
	AA3	AA3	A	—	
	AA23	AA23	I/O/Z	IPU	
	AA24	AA24	I/O/Z	IPU	
	AA25	AA25	I/O/Z	IPU	
	AA26	AA26	I/O/Z	IPU	
	AB3	AB3	I	—	
	AB11	AB11	I/O/Z	IPD	
	AB12	AB12	I/O/Z	IPD	
	AB15	AB15	I/O/Z	IPD	
	AB23	AB23	I/O/Z	IPU	
	AB24	AB24	I/O/Z	IPU	
	AB25	AB25	I/O/Z	IPU	
	AC4	AC4	O/Z	—	
	AC11	AC11	I/O/Z	IPD	
	AC15	AC15	I/O/Z	IPD	
	AC19	AC19	I/O/Z	IPU	
	AC20	AC20	I/O/Z	IPU	
	AC21	AC21	I/O/Z	IPU	
	AC25	AC25	I/O/Z	IPU	
	AC26	AC26	I/O/Z	IPU	
	AD3	AD3	O/Z	—	
	AD9	AD9	I/O/Z	IPD	
	AD11	AD11	I/O/Z	IPD	
	AD19	AD19	I/O/Z	IPU	

† I = Input, O = Output, Z = High impedance, S = Supply voltage, GND = Ground

‡ IPD = Internal pulldown, IPU = Internal pullup. (These IPD/IPU signal pins feature a 30-kΩ IPD or IPU resistor. To pull up a signal to the opposite supply rail, a 1-kΩ resistor should be used.)

Table 1−6. Terminal Functions (Continued)

SIGNAL			TYPE†	IPD/ IPU‡	DESCRIPTION
NAME	DM641	DM640			
RSV	AD20	AD20	I/O/Z	IPU	Reserved (leave unconnected, ***do not*** connect to power or ground)
	AD21	AD21	I/O/Z	IPU	
	AD22	AD22	I/O/Z	IPU	
	AD23	AD23	I/O/Z	IPU	
	AD25	AD25	I/O/Z	IPU	
	AD26	AD26	I/O/Z	IPU	
	AE9	AE9	I/O/Z	IPD	
	AE18	AE18	I/O/Z	IPD	
	AE20	AE20	I/O/Z	IPU	
	AE21	AE21	I/O/Z	IPU	
	AE22	AE22	I/O/Z	IPU	
	AE23	AE23	I/O/Z	IPU	
	AF3	AF3	O	IPU	
	AF5	AF5	I/O/Z	IPD	
	AF6	AF6	I/O/Z	IPD	
	AF18	AF18	I/O/Z	IPD	
	AF20	AF20	I/O/Z	IPU	
	AF21	AF21	I/O/Z	IPU	
	AF23	AF23	I/O/Z	IPU	
	AF24	AF24	I/O/Z	IPU	
	—	M1	I/O/Z	—	Pull up via a 10-kΩ resistor
	—	N1	I/O/Z	—	Pull down via a 10-kΩ resistor
	—	N3	I/O/Z	—	Pull up via a 10-kΩ resistor
	—	N4	I/O/Z	—	
	—	P1	I/O/Z	—	
	—	P3	I/O/Z	—	
	—	R1	I/O/Z	—	
	—	R2	I/O/Z	—	
	—	R3	I/O/Z	—	
	—	T2	I/O/Z	—	
	—	T3	I/O/Z	—	Pull down via a 10-kΩ resistor
	—	U1	I/O/Z	—	
	—	U2	I/O/Z	—	
	—	U3	I/O/Z	—	
	—	U4	I/O/Z	—	
	—	V1	I/O/Z	—	
	—	V2	I/O/Z	—	
	—	V3	I/O/Z	—	
	—	W2	I/O/Z	—	
	—	W3	I/O/Z	—	

† I = Input, O = Output, Z = High impedance, S = Supply voltage, GND = Ground

‡ IPD = Internal pulldown, IPU = Internal pullup. (These IPD/IPU signal pins feature a 30-kΩ IPD or IPU resistor. To pull up a signal to the opposite supply rail, a 1-kΩ resistor should be used.)

Table 1−6. Terminal Functions (Continued)

SIGNAL			TYPE†	IPD/ IPU‡	DESCRIPTION
NAME	DM641	DM640			
RSV	—	W4	I/O/Z	—	Pull down via a 10-kΩ resistor
	—	Y2	I/O/Z	—	
	—	Y3	I/O/Z	—	
	—	Y4	I/O/Z	—	
	—	AA1	I/O/Z	—	
	—	AC8	I/O/Z	IPD	Reserved (leave unconnected, ***do not*** connect to power or ground)
	—	AD5	I/O/Z	IPD	
	—	AE5	I/O/Z	IPD	
	—	AF4	I/O/Z	IPD	
	—	AF8	I	IPD	
	—	AF10	I/O/Z	IPD	
SUPPLY VOLTAGE PINS					
DV_{DD}	A2	A2	S		3.3-V supply voltage
	A25	A25			
	B1	B1			
	B2	B2			
	B14	B14			
	B25	B25			
	B26	B26			
	C3	C3			
	C24	C24			
	D4	D4			
	D23	D23			
	E5	E5			
	E7	E7			
	E8	E8			
	E10	E10			
	E17	E17			
	E19	E19			
	E20	E20			
	E22	E22			
	F9	F9			
	F12	F12			
	F15	F15			
	F18	F18			

† I = Input, O = Output, Z = High impedance, S = Supply voltage, GND = Ground

‡ IPD = Internal pulldown, IPU = Internal pullup. (These IPD/IPU signal pins feature a 30-kΩ IPD or IPU resistor. To pull up a signal to the opposite supply rail, a 1-kΩ resistor should be used.)

Table 1−6. Terminal Functions (Continued)

SIGNAL			TYPE†	IPD/ IPU‡	DESCRIPTION
NAME	DM641	DM640			
SUPPLY VOLTAGE PINS (CONTINUED)					
DV_{DD}	G5	G5	S		3.3-V supply voltage
	G22	G22			
	H5	H5			
	H22	H22			
	J6	J6			
	J21	J21			
	K5	K5			
	K22	K22			
	M6	M6			
	M21	M21			
	N2	N2			
	P25	P25			
	R21	R21			
	U5	U5			
	U22	U22			
	V21	V21			
	W5	W5			
	W22	W22			
	W25	W25			
	Y5	Y5			
	Y22	Y22			
	AA9	AA9			
	AA12	AA12			
	AA15	AA15			
	AA18	AA18			
	AB5	AB5			
	AB7	AB7			
	AB8	AB8			
	AB10	AB10			
	AB17	AB17			
	AB19	AB19			
	AB20	AB20			

† I = Input, O = Output, Z = High impedance, S = Supply voltage, GND = Ground

‡ IPD = Internal pulldown, IPU = Internal pullup. (These IPD/IPU signal pins feature a 30-kΩ IPD or IPU resistor. To pull up a signal to the opposite supply rail, a 1-kΩ resistor should be used.)

Table 1−6. Terminal Functions (Continued)

SIGNAL			TYPE†	IPD/ IPU‡	DESCRIPTION
NAME	DM641	DM640			
SUPPLY VOLTAGE PINS (CONTINUED)					
DV_{DD}	AB22	AB22	S		3.3-V supply voltage
	AC23	AC23			
	AD24	AD24			
	AE1	AE1			
	AE2	AE2			
	AE13	AE13			
	AE25	AE25			
	AE26	AE26			
	AF2	AF2			
	AF25	AF25			
CV_{DD}	F6	F6	S		1.2-V supply voltage (-400, -500 devices) 1.4-V supply voltage (-600 device)
	F7	F7			
	F20	F20			
	F21	F21			
	G6	G6			
	G7	G7			
	G8	G8			
	G10	G10			
	G11	G11			
	G13	G13			
	G14	G14			
	G16	G16			
	G17	G17			
	G19	G19			
	G20	G20			
	G21	G21			
	H20	H20			
	K7	K7			
	K20	K20			
	L7	L7			
	L20	L20			
	M12	M12			
	M14	M14			
	N7	N7			

† I = Input, O = Output, Z = High impedance, S = Supply voltage, GND = Ground

‡ IPD = Internal pulldown, IPU = Internal pullup. (These IPD/IPU signal pins feature a 30-kΩ IPD or IPU resistor. To pull up a signal to the opposite supply rail, a 1-kΩ resistor should be used.)

Table 1−6. Terminal Functions (Continued)

SIGNAL			TYPE†	IPD/ IPU‡	DESCRIPTION
NAME	DM641	DM640			
SUPPLY VOLTAGE PINS (CONTINUED)					
CV_{DD}	N13	N13	S		1.2-V supply voltage (-400, -500 devices) 1.4-V supply voltage (-600 device)
	N15	N15			
	N20	N20			
	P7	P7			
	P12	P12			
	P14	P14			
	P20	P20			
	R13	R13			
	R15	R15			
	T7	T7			
	T20	T20			
	U7	U7			
	U20	U20			
	W20	W20			
	Y6	Y6			
	Y7	Y7			
	Y8	Y8			
	Y10	Y10			
	Y11	Y11			
	Y13	Y13			
	Y14	Y14			
	Y16	Y16			
	Y17	Y17			
	Y19	Y19			
	Y20	Y20			
	Y21	Y21			
	AA6	AA6			
	AA7	AA7			
	AA20	AA20			
	AA21	AA21			

† I = Input, O = Output, Z = High impedance, S = Supply voltage, GND = Ground

‡ IPD = Internal pulldown, IPU = Internal pullup. (These IPD/IPU signal pins feature a 30-kΩ IPD or IPU resistor. To pull up a signal to the opposite supply rail, a 1-kΩ resistor should be used.)

Table 1−6. Terminal Functions (Continued)

SIGNAL			TYPE†	IPD/ IPU‡	DESCRIPTION
NAME	DM641	DM640			
GROUND PINS					
V_{SS}	A1	A1	GND		Ground pins
	A3	A3			
	A6	A6			
	A8	A8			
	A12	A12			
	A14	A14			
	A19	A19			
	A22	A22			
	A26	A26			
	B3	B3			
	B6	B6			
	B7	B7			
	B13	B13			
	B19	B19			
	C2	C2			
	C4	C4			
	C13	C13			
	C18	C18			
	C23	C23			
	D1	D1			
	D2	D2			
	D5	D5			
	D13	D13			
	D18	D18			
	D22	D22			
	D24	D24			
	E3	E3			
	E6	E6			
	E9	E9			
	E16	E16			
	E18	E18			
	E21	E21			
	E23	E23			
	E26	E26			

† I = Input, O = Output, Z = High impedance, S = Supply voltage, GND = Ground

‡ IPD = Internal pulldown, IPU = Internal pullup. (These IPD/IPU signal pins feature a 30-kΩ IPD or IPU resistor. To pull up a signal to the opposite supply rail, a 1-kΩ resistor should be used.)

Table 1−6. Terminal Functions (Continued)

SIGNAL			TYPE†	IPD/ IPU‡	DESCRIPTION
NAME	DM641	DM640			
GROUND PINS (CONTINUED)					
V_{SS}	F5	F5	GND		Ground pins
	F8	F8			
	F10	F10			
	F11	F11			
	F13	F13			
	F14	F14			
	F16	F16			
	F17	F17			
	F19	F19			
	F22	F22			
	G9	G9			
	G12	G12			
	G15	G15			
	G18	G18			
	H1	H1			
	H6	H6			
	H21	H21			
	H26	H26			
	J5	J5			
	J7	J7			
	J20	J20			
	J22	J22			
	K6	K6			
	K21	K21			
	L1	L1			
	L6	L6			
	L21	L21			
	M7	M7			
	M13	M13			
	M15	M15			
	M20	M20			
	N5	N5			
	N6	N6			
	N12	N12			

† I = Input, O = Output, Z = High impedance, S = Supply voltage, GND = Ground

‡ IPD = Internal pulldown, IPU = Internal pullup. (These IPD/IPU signal pins feature a 30-kΩ IPD or IPU resistor. To pull up a signal to the opposite supply rail, a 1-kΩ resistor should be used.)

Table 1−6. Terminal Functions (Continued)

SIGNAL			TYPE†	IPD/ IPU‡	DESCRIPTION
NAME	DM641	DM640			
GROUND PINS (CONTINUED)					
V_{SS}	N14	N14	GND		Ground pins
	N21	N21			
	N25	N25			
	P2	P2			
	P6	P6			
	P13	P13			
	P15	P15			
	P21	P21			
	R7	R7			
	R12	R12			
	R14	R14			
	R20	R20			
	T1	T1			
	T5	T5			
	T6	T6			
	T21	T21			
	T26	T26			
	U6	U6			
	U21	U21			
	V5	V5			
	V7	V7			
	V20	V20			
	V22	V22			
	W1	W1			
	W6	W6			
	W21	W21			
	W26	W26			
	Y9	Y9			
	Y12	Y12			
	Y15	Y15			
	Y18	Y18			
	AA4	AA4			
	AA5	AA5			
	AA8	AA8			

† I = Input, O = Output, Z = High impedance, S = Supply voltage, GND = Ground

‡ IPD = Internal pulldown, IPU = Internal pullup. (These IPD/IPU signal pins feature a 30-kΩ IPD or IPU resistor. To pull up a signal to the opposite supply rail, a 1-kΩ resistor should be used.)

Table 1−6. Terminal Functions (Continued)

SIGNAL			TYPE†	IPD/ IPU‡	DESCRIPTION
NAME	DM641	DM640			
GROUND PINS (CONTINUED)					
V_{SS}	AA10	AA10	GND		Ground pins
	AA11	AA11			
	AA13	AA13			
	AA14	AA14			
	AA16	AA16			
	AA17	AA17			
	AA19	AA19			
	AA22	AA22			
	AB1	AB1			
	AB2	AB2			
	AB4	AB4			
	AB6	AB6			
	AB9	AB9			
	AB18	AB18			
	AB21	AB21			
	AB26	AB26			
	AC3	AC3			
	AC5	AC5			
	AC18	AC18			
	AC22	AC22			
	AC24	AC24			
	AD2	AD2			
	AD4	AD4			
	AD18	AD18			
	AE3	AE3			
	AE8	AE8			
	AE10	AE10			
	AE12	AE12			
	AE14	AE14			
	AE19	AE19			
	AE24	AE24			
	AF1	AF1			
	AF7	AF7			

† I = Input, O = Output, Z = High impedance, S = Supply voltage, GND = Ground

‡ IPD = Internal pulldown, IPU = Internal pullup. (These IPD/IPU signal pins feature a 30-kΩ IPD or IPU resistor. To pull up a signal to the opposite supply rail, a 1-kΩ resistor should be used.)

Table 1−6. Terminal Functions (Continued)

SIGNAL			TYPE†	IPD/ IPU‡	DESCRIPTION
NAME	DM641	DM640			
GROUND PINS (CONTINUED)					
V_{SS}	AF9	AF9	GND		Ground pins
	AF11	AF11			
	AF13	AF13			
	AF15	AF15			
	AF19	AF19			
	AF22	AF22			
	AF26	AF26			

† I = Input, O = Output, Z = High impedance, S = Supply voltage, GND = Ground

‡ IPD = Internal pulldown, IPU = Internal pullup. (These IPD/IPU signal pins feature a 30-kΩ IPD or IPU resistor. To pull up a signal to the opposite supply rail, a 1-kΩ resistor should be used.)

1.10 Development

1.10.1 Development Support

TI offers an extensive line of development tools for the TMS320C6000™ DSP platform, including tools to evaluate the performance of the processors, generate code, develop algorithm implementations, and fully integrate and debug software and hardware modules.

The following products support development of C6000™ DSP-based applications:

Software Development Tools:
Code Composer Studio™ Integrated Development Environment (IDE): including Editor
C/C++/Assembly Code Generation, and Debug plus additional development tools
Scalable, Real-Time Foundation Software (DSP/BIOS™), which provides the basic run-time target software needed to support any DSP application.

Hardware Development Tools:
Extended Development System (XDS™) Emulator (supports C6000™ DSP multiprocessor system debug)
EVM (Evaluation Module)

For a complete listing of development-support tools for the TMS320C6000™ DSP platform, visit the Texas Instruments web site on the Worldwide Web at http://www.ti.com uniform resource locator (URL). For information on pricing and availability, contact the nearest TI field sales office or authorized distributor.

Code Composer Studio, DSP/BIOS, and XDS are trademarks of Texas Instruments.

1.10.2 Device Support

1.10.2.1 Device and Development-Support Tool Nomenclature

To designate the stages in the product development cycle, TI assigns prefixes to the part numbers of all DSP devices and support tools. Each DSP commercial family member has one of three prefixes: TMX, TMP, or TMS (e.g., TMS320DM641GDK600). Texas Instruments recommends two of three possible prefix designators for its support tools: TMDX and TMDS. These prefixes represent evolutionary stages of product development from engineering prototypes (TMX/TMDX) through fully qualified production devices/tools (TMS/TMDS).

Device development evolutionary flow:

TMX Experimental device that is not necessarily representative of the final device's electrical specifications

TMP Final silicon die that conforms to the device's electrical specifications but has not completed quality and reliability verification

TMS Fully qualified production device

Support tool development evolutionary flow:

TMDX Development-support product that has not yet completed Texas Instruments internal qualification testing.

TMDS Fully qualified development-support product

TMX and TMP devices and TMDX development-support tools are shipped against the following disclaimer:

"Developmental product is intended for internal evaluation purposes."

TMS devices and TMDS development-support tools have been characterized fully, and the quality and reliability of the device have been demonstrated fully. TI's standard warranty applies.

Predictions show that prototype devices (TMX or TMP) have a greater failure rate than the standard production devices. Texas Instruments recommends that these devices not be used in any production system because their expected end-use failure rate still is undefined. Only qualified production devices are to be used.

TI device nomenclature also includes a suffix with the device family name. This suffix indicates the package type (for example, GDK), the temperature range (for example, blank is the default commercial temperature range), and the device speed range in megahertz (for example, -600 is 600 MHz). Figure 1−7 provides a legend for reading the complete device name for any DSP platform member.

The ZDK package, like the GDK package, is a 548-ball plastic BGA *only* with Pb-free balls. The ZNZ package is the Pb−free version of the GNZ package.

For device part numbers and further ordering information for TMS320DM641/DM640 in the GDK, GNZ, ZDK and ZNZ package types, see the TI website (http://www.ti.com) or contact your TI sales representative.

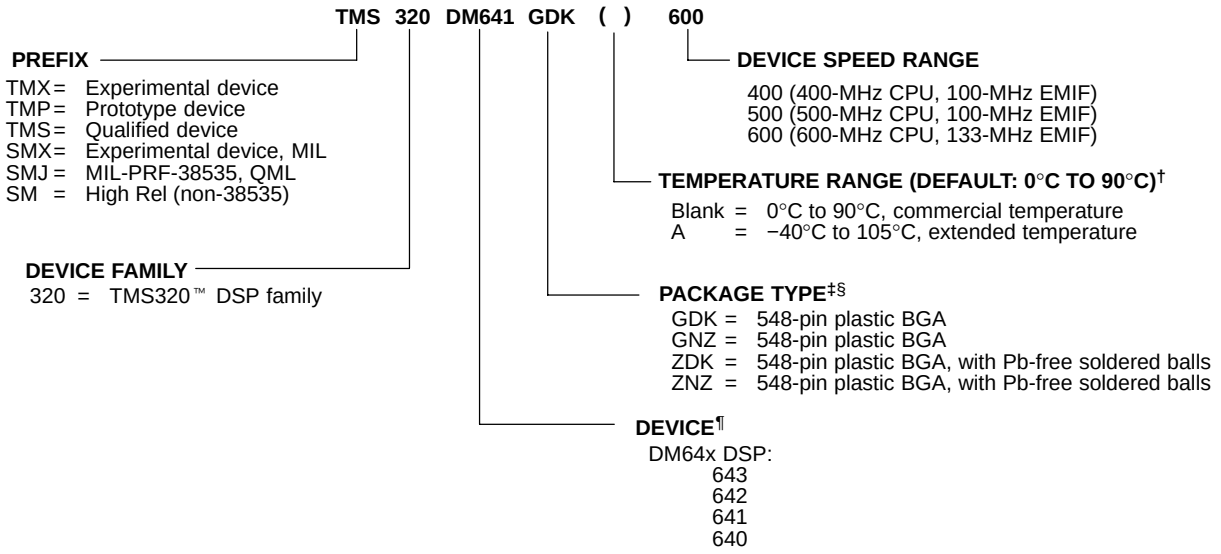

† The extended temperature "A version" devices may have different operating conditions than the commercial temperature devices. For more details, see the recommended operating conditions portion of this data sheet.
‡ BGA = Ball Grid Array
§ The ZDK and ZNZ mechanical package designators represent the version of the GDK and GNZ packages with Pb-free balls. For more detailed information, see the *Mechanical Data* section of this document.
¶ For actual device part numbers (P/Ns) and ordering information, see the TI website (www.ti.com).

Figure 1−7. TMS320DM64x™ DSP Device Nomenclature (Including the DM641 and DM640 Devices)

1.10.2.2 Documentation Support

Extensive documentation supports all TMS320™ DSP family generations of devices from product announcement through applications development. The types of documentation available include: data sheets, such as this document, with design specifications; complete user's reference guides for all devices and tools; technical briefs; development-support tools; on-line help; and hardware and software applications. The following is a brief, descriptive list of support documentation specific to the C6000™ DSP devices:

The *TMS320C6000 CPU and Instruction Set Reference Guide* (literature number SPRU189) describes the C6000™ DSP CPU (core) architecture, instruction set, pipeline, and associated interrupts.

The *TMS320C6000 DSP Peripherals Overview Reference Guide* (literature number SPRU190) provides an overview and briefly describes the functionality of the peripherals available on the C6000™ DSP platform of devices. This document also includes a table listing the peripherals available on the C6000 devices along with literature numbers and hyperlinks to the associated peripheral documents.

The *TMS320C64x Technical Overview* (literature number SPRU395) gives an introduction to the C64x™ digital signal processor, and discusses the application areas that are enhanced by the C64x™ DSP VelociTI.2™ VLIW architecture.

The *TMS320C64x DSP Video Port/VCXO Interpolated Control (VIC) Port Reference Guide* (literature number SPRU629) describes the functionality of the Video Port and VIC Port peripherals.

The *TMS320C6000 DSP Multichannel Audio Serial Port (McASP) Reference Guide* (literature number SPRU041) describes the functionality of the McASP peripheral.

TMS320C6000 DSP Inter-Integrated Circuit (I2C) Module Reference Guide (literature number SPRU175) describes the functionality of the I^2C peripheral.

TMS320C6000 DSP Ethernet Media Access Controller (EMAC)/ Management Data Input/Output (MDIO) Module Reference Guide (literature number SPRU628) describes the functionality of the EMAC and MDIO peripherals.

The *TMS320DM641/TMS320DM640 Digital Signal Processors Silicon Errata* (literature number SPRZ201) describes the known exceptions to the functional specifications for particular silicon revisions of the TMS320DM641 and TMS320DM640 devices.

The *TMS320DM64x Power Consumption Summary* application report (literature number SPRA962) discusses the power consumption for user applications with the TMS320DM641/DM640 DSP devices.

The *TMS320DM640/1 Hardware Designer's Resource Guide* (literature number SPRAA50) is organized by development flow and functional areas to make design efforts as seamless as possible. This document includes getting started, board design, system testing, and checklists to aid in initial designs and debug efforts. Each section of this document includes pointers to valuable information including: technical documentation, models, symbols, and reference designs for use in each phase of design. Particular attention is given to peripheral interfacing and system-level design concerns.

The *Using IBIS Models for Timing Analysis* application report (literature number SPRA839) describes how to properly use IBIS models to attain accurate timing analysis for a given system.

The tools support documentation is electronically available within the Code Composer Studio™ Integrated Development Environment (IDE). For a complete listing of C6000™ DSP latest documentation, visit the Texas Instruments web site on the Worldwide Web at http://www.ti.com uniform resource locator (URL).

1.10.2.3 Device Silicon Revision

The device silicon revision can be determined by the "Die PG code" marked on the top of the package. For more detailed information on the DM641/DM640 silicon revision, package markings, and the known exceptions to the functional specifications as well as any usage notes, refer to the device-specific silicon errata: *TMS320DM641, TMS320DM640 Digital Signal Processors Silicon Errata* (literature number SPRZ201).

2 Device Configurations

On the DM641/DM640 device, bootmode and certain device configurations/peripheral selections are determined at device reset, while other device configurations/peripheral selections are software-configurable via the peripheral configurations register (PERCFG) [address location 0x01B3F000] after device reset.

2.1 Configurations at Reset

For proper device operation; the following external pins ***must*** be configured correctly:

- For proper DM641 device operation, the HD5 [pin Y1] at device reset ***must*** be pulled down via a 10-kΩ resistor.
- For proper DM641/DM640 device operation, the reserved (RSV) [E2] pin at device reset ***must*** be pulled down via a 10-kΩ resistor.
- For proper DM641/DM640 device operation, the GP0[0] [pin M5] (IPD) ***must*** remain low at device reset.

2.1.1 Peripheral Selection at Device Reset

On the DM641/DM640 devices there are NO peripherals sharing the same pins (internally muxed, yet mutually exclusive) that are controlled via external pins.

- EMAC and MDIO peripherals

  The MAC_EN pin is latched at reset. This pin determines specific peripheral selection, summarized in Table 2−1.

Table 2−1. MAC_EN Peripheral Selection (EMAC and MDIO)

PERIPHERAL SELECTION	PERIPHERALS SELECTED	
MAC_EN Pin [C5]	**HPI Data (16-Bit) [DM641 Only]**	**EMAC and MDIO**
0	√	Disabled
1	√	√

2.1.2 Device Configuration at Device Reset

Table 2−2 describes the DM641/DM640 device configuration pins, which are set up via external pullup/pulldown resistors through the specified EMIFA address bus pins (AEA[22:19]) and the TOUT1/LENDIAN pin (all of which are latched during device reset).

Table 2−2. DM641/DM640 Device Configuration Pins (TOUT1/**LENDIAN, AEA[22:19], and** TOUT0/**MAC_EN)**

CONFIGURATION PIN	NO.	FUNCTIONAL DESCRIPTION
TOUT1/**LENDIAN**	B5	Device Endian mode (LEND) 0 – System operates in Big Endian mode 1 − System operates in Little Endian mode (default)
AEA[22:21]	[U23, V24]	Bootmode [1:0] − Boot mode (AEA[22:21]): 00 – No boot (default mode) 01 − HPI **[DM641 only]**; Reserved [**For DM640 device**] 10 − Reserved 11 − EMIFA 8−bit ROM boot
AEA[20:19]	[V25, V26]	EMIFA input clock select Clock mode select for EMIFA (AECLKIN_SEL[1:0]) 00 – AECLKIN (default mode) 01 − CPU/4 Clock Rate 10 − CPU/6 Clock Rate 11 − Reserved
TOUT0/**MAC_EN**	C5	Peripheral Selection 1 − EMAC and MDIO enabled 0 − EMAC and MDIO disabled

2.2 Configurations After Reset

2.2.1 Peripheral Selection After Device Reset

Video Ports, McBSP1, McBSP0, McASP0, and I2C0

The DM641/DM640 device has designated registers for peripheral configuration (PERCFG), device status (DEVSTAT), and JTAG identification (JTAGID). These registers are part of the Device Configuration module and are mapped to a 4K block memory starting at 0x01B3F000. The CPU accesses these registers via the CFGBUS.

The peripheral configuration register (PERCFG), allows the user to control the peripheral selection of the Video Ports (VP0 and VP1 [DM641 only]) McBSP0, McBSP1, McASP0, and I2C0 peripherals. For more detailed information on the PERCFG register control bits, see Figure 2−1 and Table 2−3.

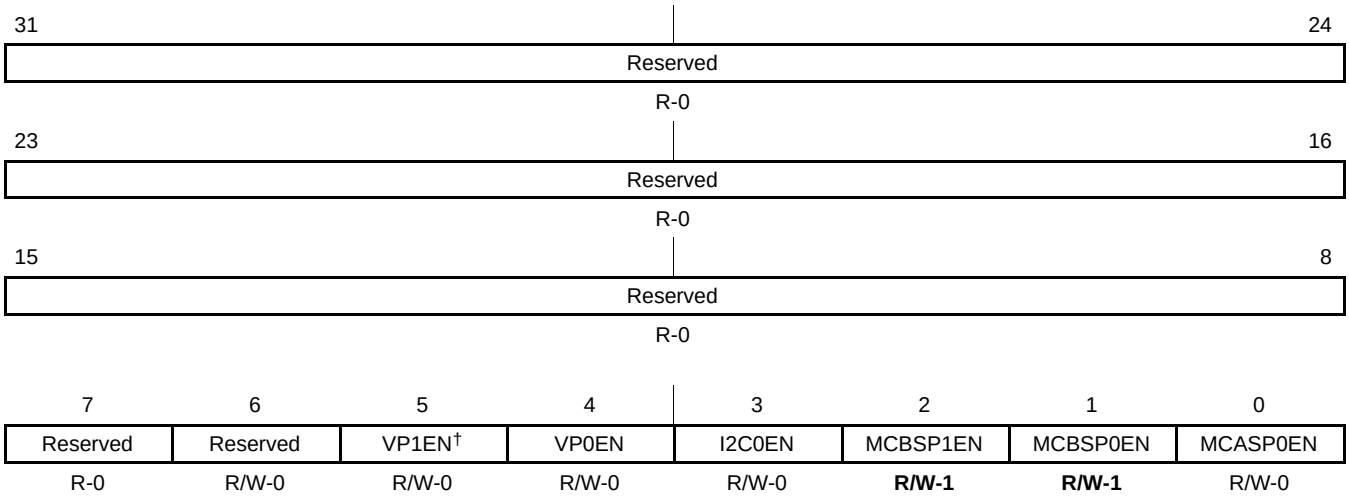

7	6	5	4	3	2	1	0
Reserved	Reserved	VP1EN†	VP0EN	I2C0EN	MCBSP1EN	MCBSP0EN	MCASP0EN
R-0	R/W-0	R/W-0	R/W-0	R/W-0	**R/W-1**	**R/W-1**	R/W-0

Legend: R = Read only; R/W = Read/Write; -n = value after reset

† The DM640 device does ***not*** support the VP1 peripheral; therefore, this bit is Reserved.

Figure 2−1. Peripheral Configuration Register (PERCFG) [Address Location: 0x01B3F000 − 0x01B3F003]

Table 2−3. Peripheral Configuration (PERCFG) Register Selection Bit Descriptions

BIT	NAME	DESCRIPTION
31:6	Reserved	Reserved. Read-only, writes have no effect.
5	VP1EN	VP1 Enable bit [DM641 only]. Determines whether the VP1 peripheral is enabled or disabled. 0 = VP1 is disabled, and the module is powered down (default). (This feature allows power savings by disabling the peripheral when not in use.) 1 = VP1 is enabled. The DM640 device does ***not*** support the VP1 peripheral; therefore, this bit is Reserved.
4	VP0EN	VP0 Enable bit. Determines whether the VP0 peripheral is enabled or disabled. 0 = VP0 is disabled, and the module is powered down (default). (This feature allows power savings by disabling the peripheral when not in use.) 1 = VP0 is enabled.
3	I2C0EN	Inter-integrated circuit 0 (I2C0) enable bit. Selects whether I2C0 peripheral is enabled or disabled (default). 0 = I2C0 is disabled, and the module is powered down (default). 1 = I2C0 is enabled.
2	MCBSP1EN	Video Port 1 (VP1) lower data pins vs. McBSP1 enable bit. Selects whether VP1 peripheral lower-data pins or the McBSP1 peripheral is enabled. 0 = VP1 lower-data pins are enabled and function (if VP1EN=1), McBSP1 is disabled; the remaining VP1 upper-data pins are dependent on the MCASP0EN bit and the VP1EN bit settings. 1 = McBSP1 is enabled, VP1 lower-data pin functions are disabled (default). For a graphic (logic) representation of this Peripheral Configuration (PERCFG) Register selection bit and the signal pins controlled/selected, see Figure 2−2.

Table 2−3. Peripheral Configuration (PERCFG) Register Selection Bit Descriptions (Continued)

BIT	NAME	DESCRIPTION
1	MCBSP0EN	Video Port 0 (VP0) lower data pins vs. McBSP0 enable bit. Selects whether VP0 peripheral lower-data pins or the McBSP1 peripheral is enabled. 0 = VP0 lower-data pins are enabled and function (if VP0EN=1), McBSP0 is disabled; the remaining VP0 upper-data pins are dependent on the MCASP0EN bit and the VP1EN bit settings. 1 = McBSP0 is enabled, VP0 lower-data pin functions are disabled (default). For a graphic (logic) representation of this Peripheral Configuration (PERCFG) Register selection bit and the signal pins controlled/selected, see Figure 2−2.
0	MCASP0EN	McASP0 select bit. Selects whether the McASP0 peripheral or the VP0 and VP1 upper-data pins are enabled. 0 = Reserved [default]. 1 = McASP0 is enabled. **For proper DM641/DM640 device operation, the pin must be set to a “1”.**

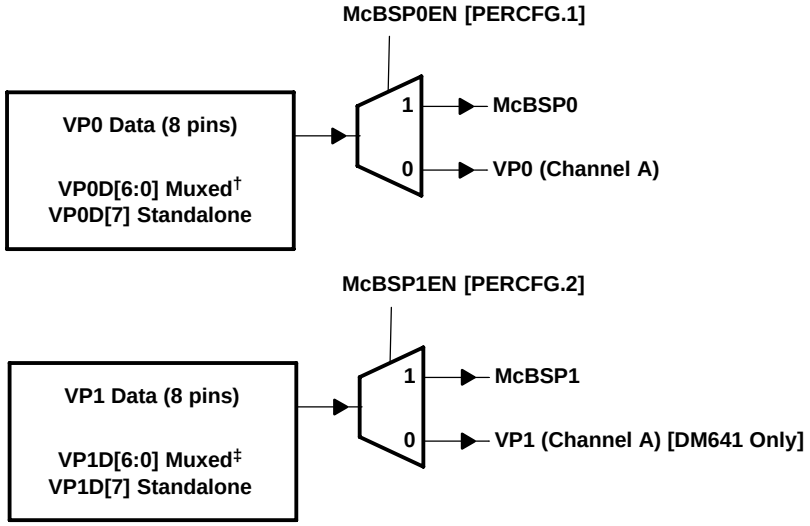

† Consists of: VP0D[6]/CLKR0, VP0D[5]/FSR0, VP0D[4]/DR0, VP0D[3]/CLKS0, VP0D[2]/DX0, VP0D[1]/FSX0, VP0D[0]/CLKX0.
‡ Consists of: VP1D[6]/CLKR1, VP1D[5]/FSR1, VP1D[4]/DR1, VP1D[3]/CLKS1, VP1D[2]/DX1, VP1D[1]/FSX1, VP1D[0]/CLKX1.

Figure 2−2. VP1, VP0, McBSP1, and McBSP0 Pin Muxing

2.3 Peripheral Configuration Lock

By default, the McASP0, VP0, VP1 [DM641 only], and I2C peripherals are disabled on power up. In order to use these peripherals on the DM641/DM640 device, the peripheral must first be enabled in the Peripheral Configuration register (PERCFG). **Software muxed pins should not be programmed to switch functionalities during run-time. Care should also be taken to ensure that no accesses are being performed before disabling the peripherals.** To help minimize power consumption in the DM641/DM640 device, unused peripherals may be disabled.

Figure 2−3 shows the flow needed to enable (or disable) a given peripheral on the DM641/DM640 devices.

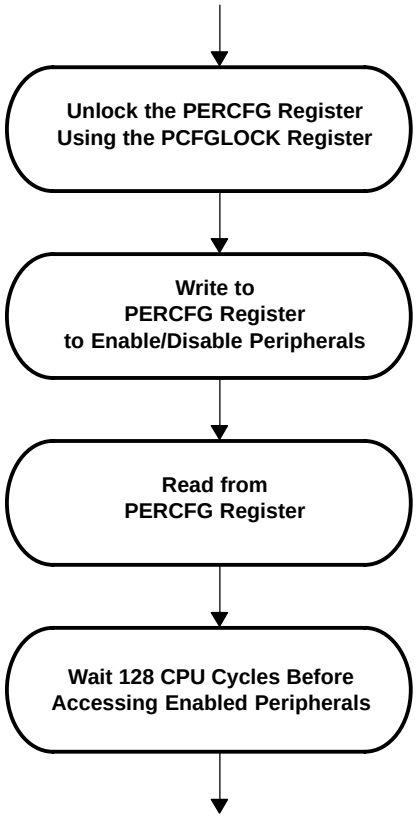

Figure 2−3. Peripheral Enable/Disable Flow Diagram

A 32-bit key (value = 0x10C0010C) must be written to the Peripheral Configuration Lock register (PCFGLOCK) in order to unlock access to the PERCFG register. Reading the PCFGLOCK register determines whether the PERCFG register is currently locked (LOCKSTAT bit = 1) or unlocked (LOCKSTAT bit = 0), see Figure 2−4. A peripheral can only be enabled when the PERCFG register is “unlocked” (LOCKSTAT bit = 0).

Read Accesses

31	1	0
Reserved		LOCKSTAT
R-0		R-1

Write Accesses

31	0
LOCK	
W-0	

Legend: R = Read only; R/W = Read/Write; -n = value after reset

Figure 2−4. PCFGLOCK Register Diagram [Address Location: 0x01B3 F018] − Read/Write Accesses

Table 2−4. PCFGLOCK Register Selection Bit Descriptions − Read Accesses

BIT	NAME	DESCRIPTION
31:1	Reserved	Reserved. Read-only, writes have no effect.
0	LOCKSTAT	Lock status bit. Determines whether the PERCFG register is locked or unlocked. 0 = Unlocked, read accesses to the PERCFG register allowed. 1 = Locked, write accesses to the PERCFG register do ***not*** modify the register state [default]. Reads are unaffected by Lock Status.

Table 2−5. PCFGLOCK Register Selection Bit Descriptions − Write Accesses

BIT	NAME	DESCRIPTION
31:0	LOCK	Lock bits. 0x10C0010C = Unlocks PERCFG register accesses.

Any write to the PERCFG register will automatically relock the register. In order to avoid the unnecessary overhead of multiple unlock/enable sequences, all peripherals should be enabled with a single write to the PERCFG register with the necessary enable bits set.

Prior to waiting 128 CPU cycles, the PERCFG register should be read. There is no direct correlation between the CPU issuing a write to the PERCFG register and the write actually occurring. Reading the PERCFG register after the write is issued forces the CPU to wait for the write to the PERCFG register to occur.

Once a peripheral is enabled, the DSP (or other peripherals such as the HPI) must wait a minimum of 128 CPU cycles before accessing the enabled peripheral. The user *must* ensure that no accesses are performed to a peripheral while it is disabled.

2.4 Device Status Register Description

The device status register depicts the status of the device peripheral selection. For the actual register bit names and their associated bit field descriptions, see Figure 2−5 and Table 2−6.

31	30	29	28	27	26	25	24
Reserved							
R-0							

23	22	21	20	19	18	17	16
Reserved							
R-0							

15	14	13	12	11	10	9	8
Reserved				MAC_EN	Reserved	Reserved	Reserved
R-0				R-x	R-0	R-x	R-0

7	6	5	4	3	2	1	0
Reserved	CLKMODE1	CLKMODE0	LENDIAN	BOOTMODE1	BOOTMODE0	AECLKINSEL1	AECLKINSEL0
R-x	R-x	R-x	R-x	R-x	R-x	R-x	R-x

Legend: R = Read only; R/W = Read/Write; -n = value after reset

Figure 2−5. Device Status Register (DEVSTAT) Description − 0x01B3 F004

Table 2−6. Device Status (DEVSTAT) Register Selection Bit Descriptions

BIT	NAME	DESCRIPTION
31:12	Reserved	Reserved. Read-only, writes have no effect.
11	MAC_EN	EMAC enable bit. Shows the status of whether EMAC peripheral is enabled or disabled (default). 0 = EMAC is disabled, and the module is powered down (default). 1 = EMAC is enabled.
10:7	Reserved	Reserved. Read-only, writes have no effect.
6	CLKMODE1	Clock mode select bits Shows the status of whether the CPU clock frequency equals the input clock frequency X1 (Bypass), x6, or x12. Clock mode select for CPU clock frequency (CLKMODE[1:0]) 00 – Bypass (x1) (default mode) 01 − x6 10 − x12 11 − Reserved For more details on the CLKMODE pins and the PLL multiply factors, see the Clock PLL section of this data sheet.
5	CLKMODE0	
4	LENDIAN	Device Endian mode (LEND) Shows the status of whether the system is operating in Big Endian mode or Little Endian mode (default). 0 – System is operating in Big Endian mode 1 − System is operating in Little Endian mode (default)
3	BOOTMODE1	Bootmode configuration bits Shows the status of what device bootmode configuration is operational. Bootmode [1:0] 00 – No boot (default mode) 01 − HPI **[DM641 only]**; Reserved [**For DM640 device**] 10 − Reserved 11 − EMIFA 8−bit ROM boot
2	BOOTMODE0	

Table 2−6. Device Status (DEVSTAT) Register Selection Bit Descriptions (Continued)

BIT	NAME	DESCRIPTION
1	AECLKINSEL1	EMIFA input clock select Shows the status of what clock mode is enabled or disabled for the EMIF. Clock mode select for EMIFA (AECLKIN_SEL[1:0]) 00 − AECLKIN (default mode) 01 − CPU/4 Clock Rate 10 − CPU/6 Clock Rate 11 − Reserved
0	AECLKINSEL0	

2.5 Multiplexed Pin Configurations

Multiplexed pins are pins that are shared by more than one peripheral and are internally multiplexed. Some of these pins are configured by software, and the others are configured by external pullup/pulldown resistors only at reset. Those muxed pins that are configured by software should ***not*** be programmed to switch functionalities during run-time. Those muxed pins that are configured by external pullup/pulldown resistors are mutually exclusive; only one peripheral has primary control of the function of these pins after reset. Table 2−7 identifies the multiplexed pins on the DM641/DM640 device; shows the default (primary) function and the default settings after reset; and describes the pins, registers, etc. necessary to configure specific multiplexed functions.

Table 2−7. DM641/DM640 Device Multiplexed Pin Configurations

MULTIPLEXED PINS		DEFAULT FUNCTION	DEFAULT SETTING	DESCRIPTION
NAME	NO.			
CLKOUT4/GP0[1]	D6	CLKOUT4	GP1EN = 0 (disabled)	These pins are software-configurable. To use these pins as GPIO pins, the GPxEN bits in the GPIO Enable Register and the GPxDIR bits in the GPIO Direction Register must be properly configured. GPxEN = 1: GPx pin enabled GPxDIR = 0: GPx pin is an input GPxDIR = 1: GPx pin is an output
CLKOUT6/GP0[2]	C6	CLKOUT6	GP2EN = 0 (disabled)	
VP1D[6]/CLKR1	AD8	McBSP1 functions	VP1EN bit = 0 (disabled) MCBSP1EN bit = 1 (enabled)	**Muxed on the DM641 device only** [The DM640 device does ***not*** support the VP1 peripheral; therefore, the McBSP1 peripheral pins are standalone peripheral functions, not muxed.] By default, the McBSP1 peripheral, function is enabled upon reset (MCBSP1EN bit = 1). To enable the Video Port 1 data pins, the VP1EN bit in the PERCFG register must be set to a 1.
VP1D[5]/FSR1	AC7			
VP1D[4]/DR1	AD7			
VP1D[3]/CLKS1	AE7			
VP1D[2]/DX1	AC6			
VP1D[1]/FSX1	AD6			
VP1D[0]/CLKX1	AE6			
VP0D[6]/CLKR0	AE15	McBSP0 functions	VP0EN bit = 0 (disabled) MCBSP0EN bit = 1 (enabled)	By default, the McBSP0 peripheral function is enabled upon reset (MCBSP0EN bit = 1). To enable the Video Port 0 data pins, the VP0EN bit in the PERCFG register must be set to a 1.
VP0D[5]/FSR0	AB16			
VP0D[4]/DR0	AC16			
VP0D[3]/CLKS0	AD16			
VP0D[2]/DX0	AE16			
VP0D[1]/FSX0	AF16			
VP0D[0]/CLKX0	AF17			

2.6 Debugging Considerations

It is recommended that external connections be provided to device configuration pins, including TOUT1/LENDIAN, AEA[22:19] and TOUT0/MAC_EN. Although internal pullup/pulldown resistors exist on these pins, providing external connectivity adds convenience to the user in debugging and flexibility in switching operating modes.

Internal pullup/pulldown resistors also exist on the non-configuration pins on the AEA bus (AEA[18:0]). Do ***not*** oppose the internal pullup/pulldown resistors on these non-configuration pins with external pullup/pulldown resistors. If an external controller provides signals to these non-configuration pins, these signals must be driven to the default state of the pins at reset, or not be driven at all.

For the internal pullup/pulldown resistors for all device pins, see the terminal functions table.

2.7 Configuration Examples

Figure 2−6 through Figure 2−9 illustrate examples of peripheral selections that are configurable on the DM641 and DM640 devices.

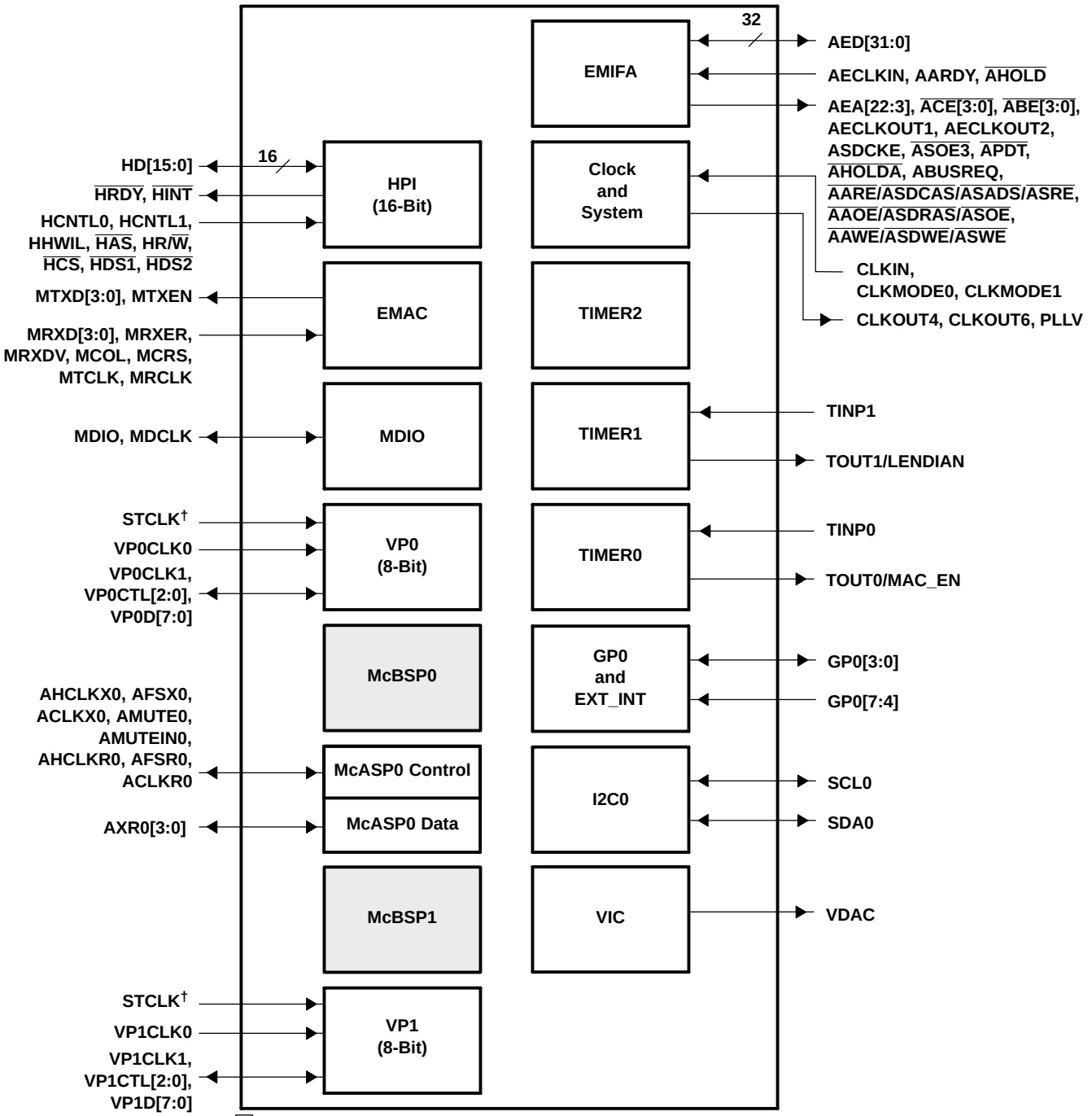

☐ Shading denotes a peripheral module not available for this configuration.

† STCLK supports both video ports (VP1 and VP0).

PERCFG Register Value: 0x0000 0039
Extenal Pins: TOUT0/MAC_EN = 1

Figure 2−6. Configuration Example A for DM641 (2 8-Bit Video Ports + 1 McASP0 + VIC + I2C0 + EMIF) [TBD Application]

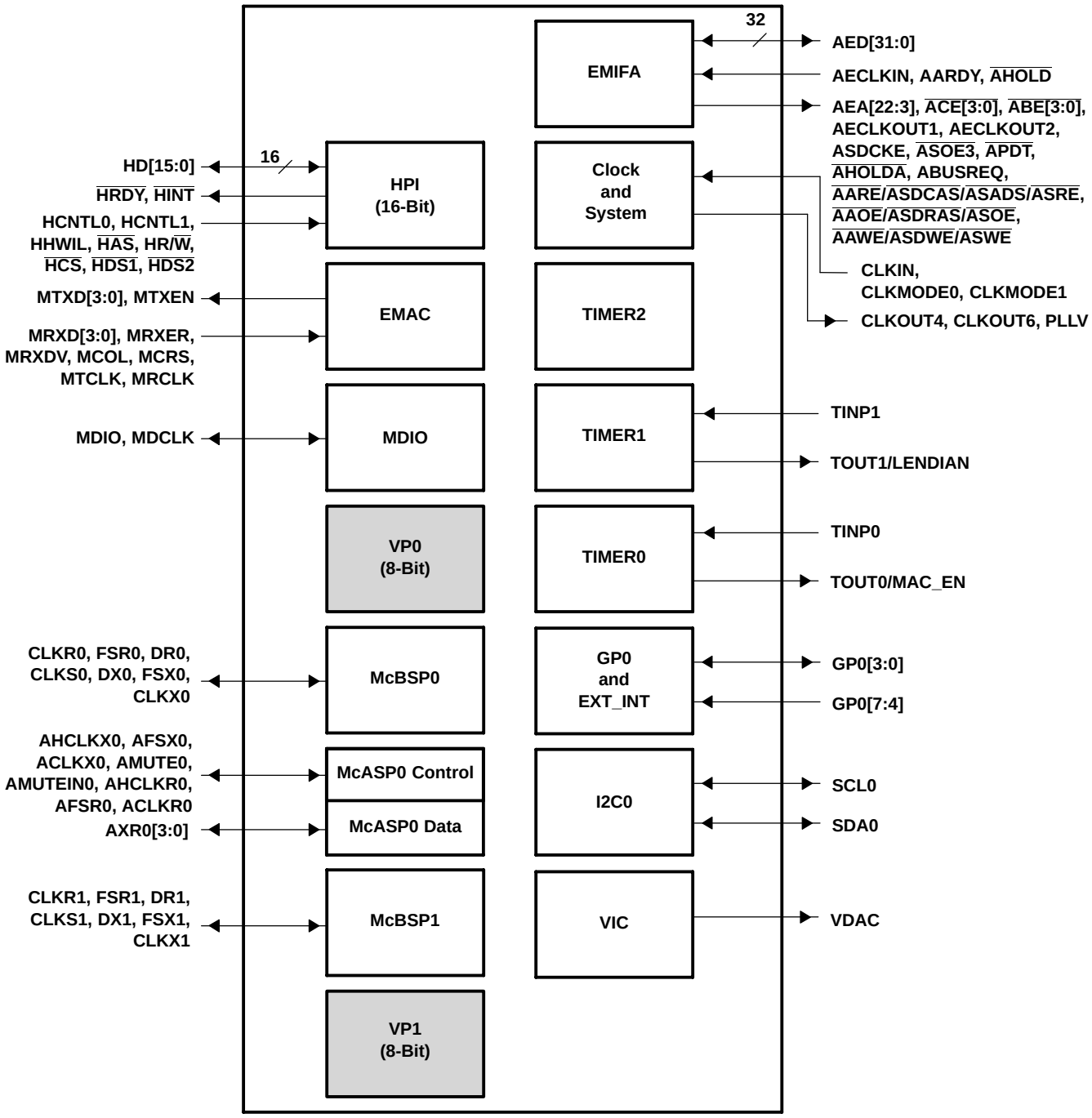

☐ Shading denotes a peripheral module not available for this configuration.

PERCFG Register Value: 0x0000 000F
Extenal Pins: TOUT0/MAC_EN = 1

Figure 2−7. Configuration Example B for DM641 (1 McASP0 + 2 McBSPs + VIC + I2C0 + EMIF) [TBD Application]

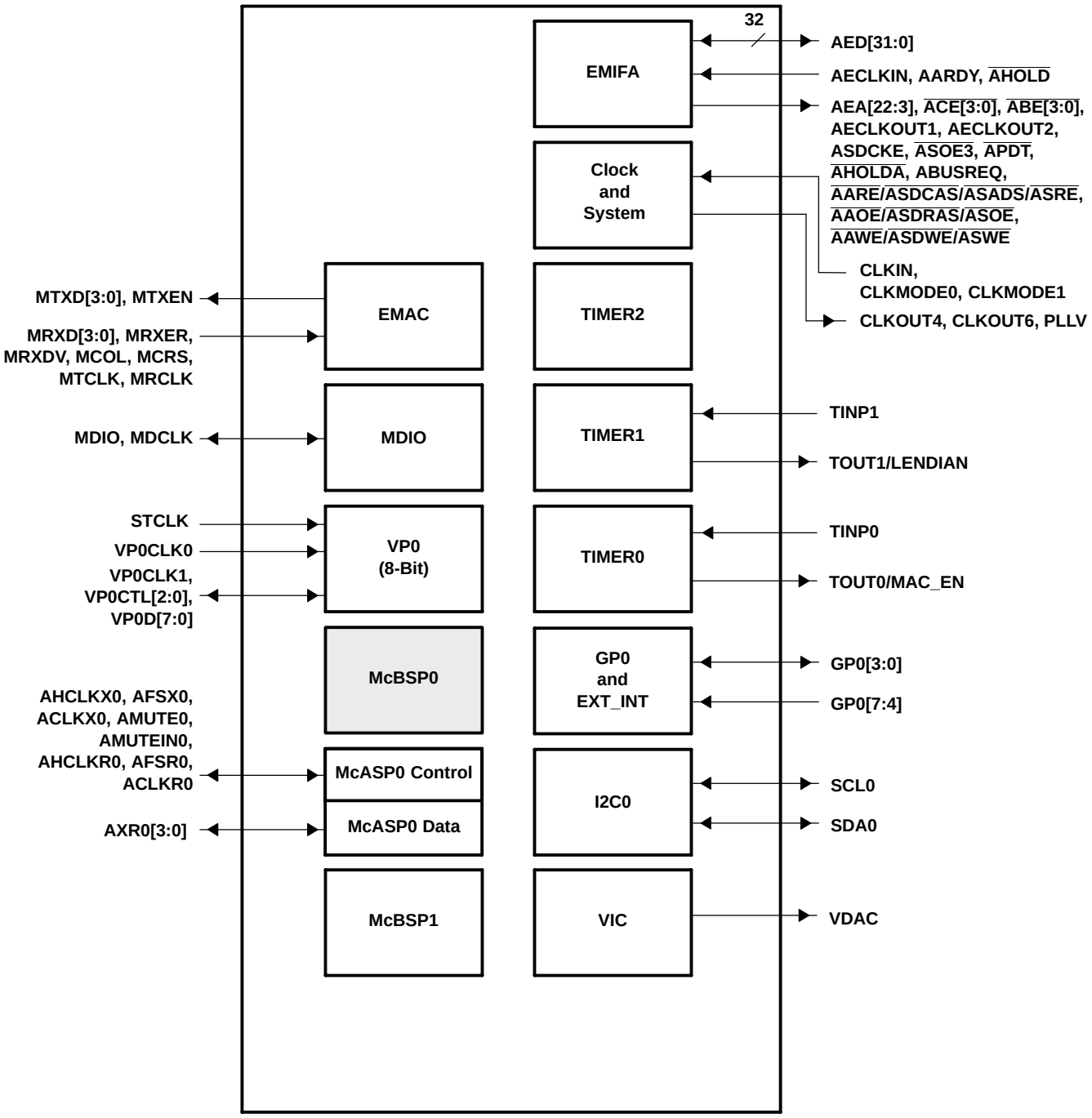

☐ Shading denotes a peripheral module not available for this configuration.

PERCFG Register Value: **0x0000 0019**
Extenal Pins: **TOUT0/MAC_EN = 1**

Figure 2−8. Configuration Example A for DM640 (1 8-Bit Video Port + 1 McASP0 + VIC + I2C0 + EMIF) [TBD Application]

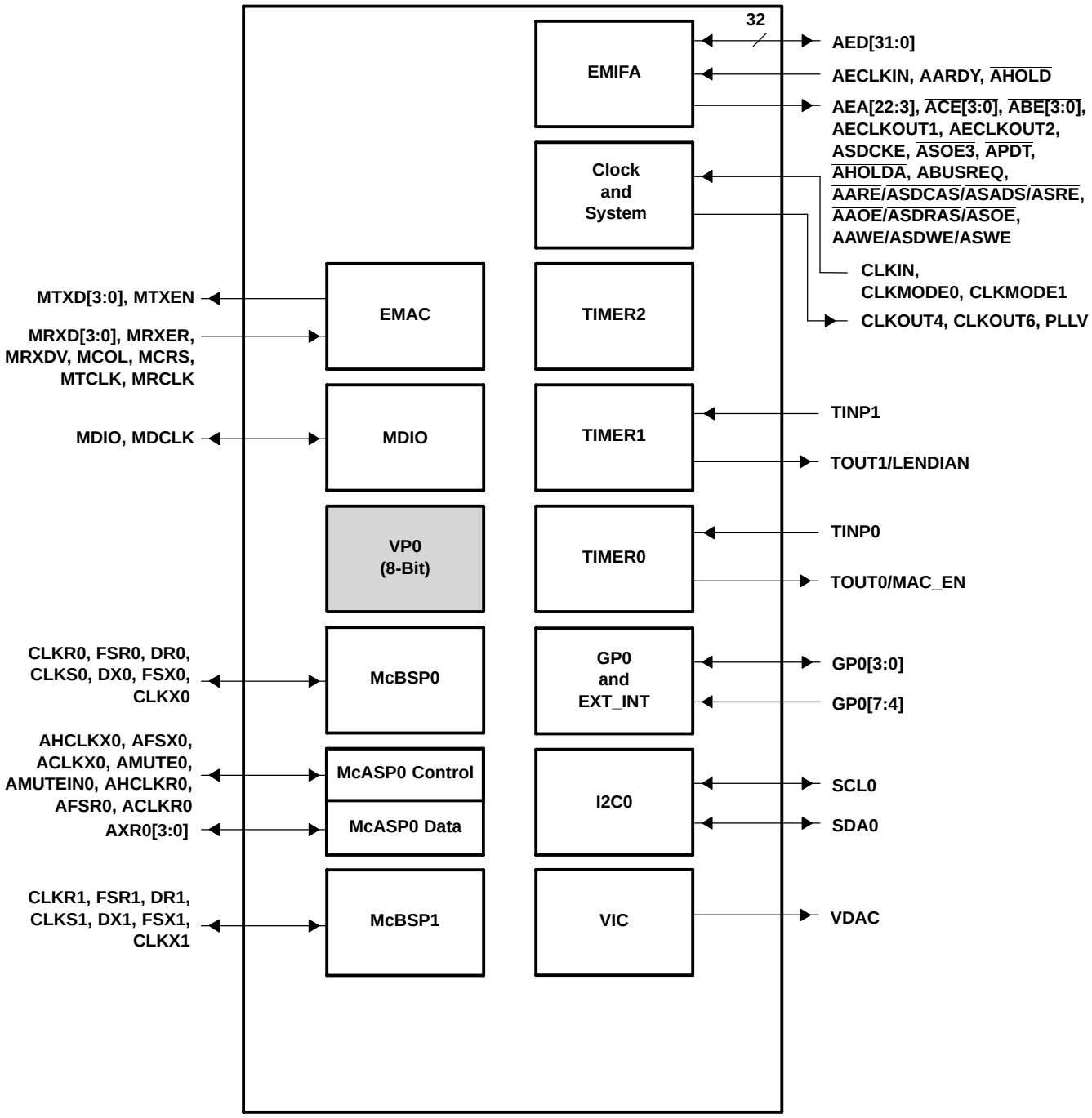

☐ Shading denotes a peripheral module not available for this configuration.

PERCFG Register Value: **0x0000 000F**
Extenal Pins: **TOUT0/MAC_EN = 1**

Figure 2−9. Configuration Example B for DM640 (1 McASP0 + 2 McBSPs + VIC + I2C0 + EMIF) [TBD Application]

3 Device Operating Conditions

3.1 Absolute Maximum Ratings Over Operating Case Temperature Range (Unless Otherwise Noted)†

Supply voltage ranges: CV_{DD} (see Note 1) . . . . . − 0.3 V to 1.8 V

DV_{DD} (see Note 1) . . . . . −0.3 V to 4 V

Input voltage ranges: V_I . . . . . −0.3 V to 4 V

Output voltage ranges: V_O . . . . . −0.3 V to 4 V

Operating case temperature ranges, T_C: (default) . . . . . 0°C to 90°C

Storage temperature range, T_{stg} . . . . . −65°C to 150°C

† Stresses beyond those listed under “absolute maximum ratings” may cause permanent damage to the device. These are stress ratings only, and functional operation of the device at these or any other conditions beyond those indicated under “recommended operating conditions” is not implied. Exposure to absolute-maximum-rated conditions for extended periods may affect device reliability.

NOTE 1: All voltage values are with respect to V_{SS}.

3.2 Recommended Operating Conditions

		MIN	NOM	MAX	UNIT
CV_{DD}	Supply voltage, Core (-400 and -500 devices)‡	1.14	1.2	1.26	V
	Supply voltage, Core (-600 device)‡	1.36	1.4	1.44	V
DV_{DD}	Supply voltage, I/O	3.14	3.3	3.46	V
V_{SS}	Supply ground	0	0	0	V
V_{IH}	High-level input voltage	2			V
V_{IL}	Low-level input voltage			0.8	V
V_{OS}	Maximum voltage during overshoot (see Figure 4−4)			4.3§	V
V_{US}	Maximum voltage during undershoot (see Figure 4−5)	−1.0§			V
T_C	Operating case temperature	0		90	°C

‡ Future variants of the C64x DSPs may operate at voltages ranging from 0.9 V to 1.4 V to provide a range of system power/performance options. TI highly recommends that users design-in a supply that can handle multiple voltages within this range (i.e., 1.2 V, 1.25 V, 1.3 V, 1.35 V, 1.4 V with ± 3% tolerances) by implementing simple board changes such as reference resistor values or input pin configuration modifications. Examples of such supplies include the PT4660, PT5500, PT5520, PT6440, and PT6930 series from Power Trends, a subsidiary of Texas Instruments. Not incorporating a flexible supply may limit the system’s ability to easily adapt to future versions of C64x devices.

§ The absolute maximum ratings should *not* be exceeded for more than 30% of the cycle period.

3.3 Electrical Characteristics Over Recommended Ranges of Supply Voltage and Operating Case Temperature (Unless Otherwise Noted)

PARAMETER		TEST CONDITIONS†	MIN	TYP	MAX	UNIT
V_{OH}	High-level output voltage	DV_{DD} = MIN, I_{OH} = MAX¶	2.4			V
V_{OL}	Low-level output voltage	DV_{DD} = MIN, I_{OL} = MAX¶			0.4	V
I_I	Input current	V_I = V_{SS} to DV_{DD} no opposing internal resistor			±10	uA
I_I	Input current	V_I = V_{SS} to DV_{DD} opposing internal pullup resistor‡	50	100	150	uA
		V_I = V_{SS} to DV_{DD} opposing internal pulldown resistor‡	−150	−100	−50	uA
I_{OH}	High-level output current	EMIF, CLKOUT4, CLKOUT6, EMUx			−16	mA
		Video Ports, Timer, TDO, GPIO (Excluding GP0[2,1]), McBSP			−8	mA
		HPI **[DM641]**			−0.5	mA
I_{OL}	Low-level output current	EMIF, CLKOUT4, CLKOUT6, EMUx			16	mA
		Video Ports, Timer, TDO, GPIO (Excluding GP0[2,1]), McBSP			8	mA
		SCL0 and SDA0			3	mA
		HPI **[DM641]**			1.5	mA
I_{OZ}	Off-state output current	V_O = DV_{DD} or 0 V			±10	uA
I_{CDD}	Core supply current§	CV_{DD} = 1.4 V, CPU clock = 600 MHz		890		mA
		CV_{DD} = 1.2 V, CPU clock = 500 MHz		620		mA
		CV_{DD} = 1.2 V, CPU clock = 400 MHz		510		mA
I_{DDD}	I/O supply current§	DV_{DD} = 3.3 V, CPU clock = 600 MHz		210		mA
		DV_{DD} = 3.3 V, CPU clock = 500 MHz		165		mA
		DV_{DD} = 3.3 V, CPU clock = 400 MHz		160		mA
C_i	Input capacitance				10	pF
C_o	Output capacitance				10	pF

† For test conditions shown as MIN, MAX, or NOM, use the appropriate value specified in the recommended operating conditions table.

‡ Applies only to pins with an internal pullup (IPU) or pulldown (IPD) resistor.

§ Measured with average activity (50% high/50% low power) at 25°C case temperature and 133-MHz EMIF for -600 speed (100-MHz EMIF for -500 and -400 speeds). This model represents a device performing high-DSP-activity operations 50% of the time, and the remainder performing low-DSP-activity operations. The high/low-DSP-activity models are defined as follows:

High-DSP-Activity Model:

CPU: 8 instructions/cycle with 2 LDDW instructions [L1 Data Memory: 128 bits/cycle via LDDW instructions; L1 Program Memory: 256 bits/cycle; L2/EMIF EDMA: 50% writes, 50% reads to/from SDRAM (50% bit-switching)]

McBSP: 2 channels at E1 rate

Timers: 2 timers at maximum rate

Low-DSP-Activity Model:

CPU: 2 instructions/cycle with 1 LDH instruction [L1 Data Memory: 16 bits/cycle; L1 Program Memory: 256 bits per 4 cycles; L2/EMIF EDMA: None]

McBSP: 2 channels at E1 rate

Timers: 2 timers at maximum rate

The actual current draw is highly application-dependent. For more details on core and I/O activity, refer to the *TMS320DMx Power Consumption Summary* application report (literature number SPRA962).

¶ Single pin driving I_{OH}/I_{OL} = MAX.

4 DM641/DM640 Peripheral Information and Electrical Specifications

4.1 Parameter Information

4.1.1 Parameter Information Device-Specific Information

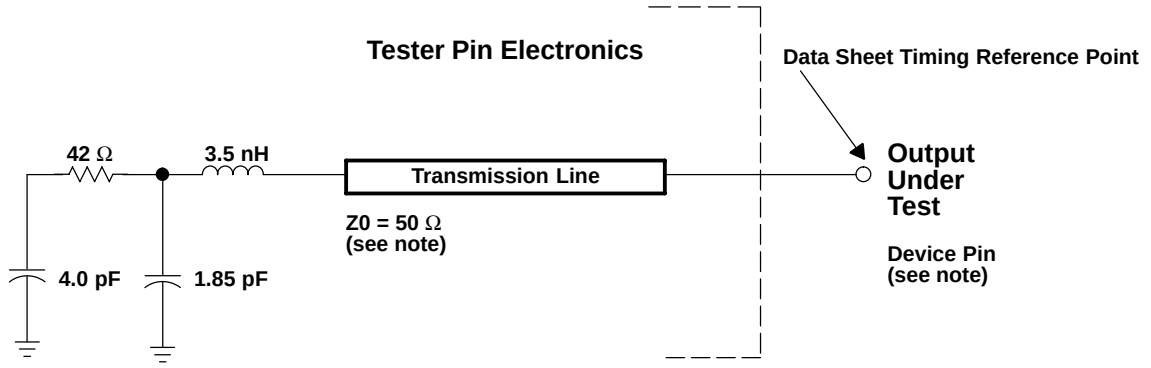

NOTE: The data sheet provides timing at the device pin. For output timing analysis, the tester pin electronics and its transmission line effects must be taken into account. A transmission line with a delay of 2 ns or longer can be used to produce the desired transmission line effect. The transmission line is intended as a load only. It is not necessary to add or subtract the transmission line delay (2 ns or longer) from the data sheet timings.

Input requirements in this data sheet are tested with an input slew rate of < 4 Volts per nanosecond (4 V/ns) at the device pin.

Figure 4−1. Test Load Circuit for AC Timing Measurements

The load capacitance value stated is only for characterization and measurement of AC timing signals. This load capacitance value does not indicate the maximum load the device is capable of driving.

4.1.1.1 Signal Transition Levels

All input and output timing parameters are referenced to 1.5 V for both “0” and “1” logic levels.

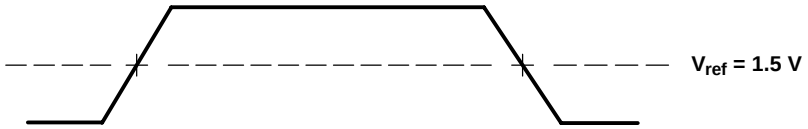

Figure 4−2. Input and Output Voltage Reference Levels for AC Timing Measurements

All rise and fall transition timing parameters are referenced to V_{IL} MAX and V_{IH} MIN for input clocks, V_{OL} MAX and V_{OH} MIN for output clocks.

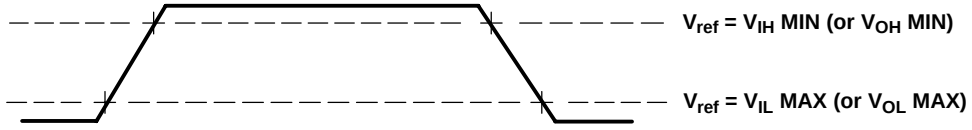

Figure 4−3. Rise and Fall Transition Time Voltage Reference Levels

4.1.1.2 Signal Transition Rates

All timings are tested with an input edge rate of 4 Volts per nanosecond (4 V/ns).

4.1.1.3 AC Transient Rise/Fall Time Specifications

Figure 4−4 and Figure 4−5 show the AC transient specifications for Rise and Fall Time. For device-specific information on these values, refer to the Recommended Operating Conditions section of this Data Sheet.

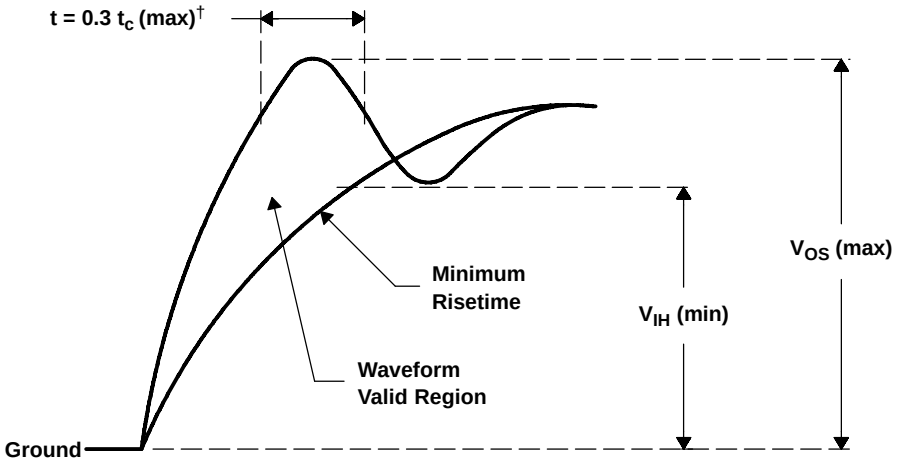

Figure 4−4. AC Transient Specification Rise Time

† t_c = the peripheral cycle time in nanoseconds (ns).

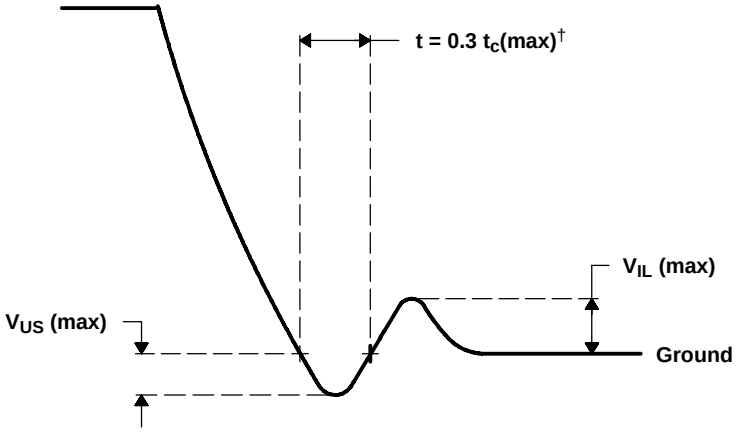

Figure 4−5. AC Transient Specification Fall Time

† t_c = the peripheral cycle time in nanoseconds (ns).

4.1.1.4 Timing Parameters and Board Routing Analysis

The timing parameter values specified in this data sheet do *not* include delays by board routings. As a good board design practice, such delays must *always* be taken into account. Timing values may be adjusted by increasing/decreasing such delays. TI recommends utilizing the available I/O buffer information specification (IBIS) models to analyze the timing characteristics correctly. To properly use IBIS models to attain accurate timing analysis for a given system, see the *Using IBIS Models for Timing Analysis* application report (literature number SPRA839). If needed, external logic hardware such as buffers may be used to compensate any timing differences.

For inputs, timing is most impacted by the round-trip propagation delay from the DSP to the external device and from the external device to the DSP. This round-trip delay tends to negatively impact the input setup time margin, but also tends to improve the input hold time margins (see Table 4−1 and Figure 4−6).

Figure 4−6 represents a general transfer between the DSP and an external device. The figure also represents board route delays and how they are perceived by the DSP and the external device.

Table 4−1. Board-Level Timing Example (see Figure 4−6)

NO.	DESCRIPTION
1	Clock route delay
2	Minimum DSP hold time
3	Minimum DSP setup time
4	External device hold time requirement
5	External device setup time requirement
6	Control signal route delay
7	External device hold time
8	External device access time
9	DSP hold time requirement
10	DSP setup time requirement
11	Data route delay

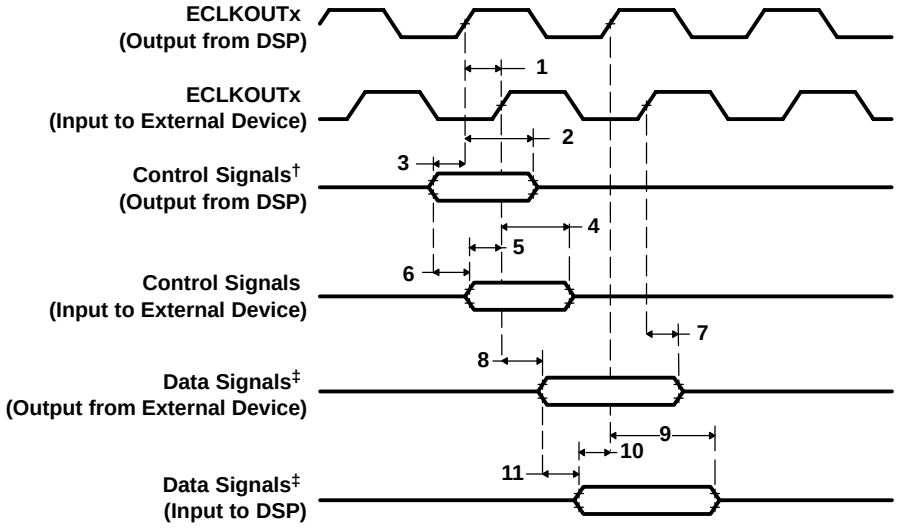

† Control signals include data for Writes.

‡ Data signals are generated during Reads from an external device.

Figure 4−6. Board-Level Input/Output Timings

4.2 Recommended Clock and Control Signal Transition Behavior

All clocks and control signals ***must*** transition between V_{IH} and V_{IL} (or between V_{IL} and V_{IH}) in a monotonic manner.

4.3 Power Supplies

For more information regarding TI's power management products and suggested devices to power TI DSPs, visit **www.ti.com/dsppower**.

4.3.1 Power-Supply Sequencing

TI DSPs do not require specific power sequencing between the core supply and the I/O supply. However, systems should be designed to ensure that neither supply is powered up for extended periods of time (>1 second) if the other supply is below the proper operating voltage.

4.3.2 Power-Supply Design Considerations

A dual-power supply with simultaneous sequencing can be used to eliminate the delay between core and I/O power up. A Schottky diode can also be used to tie the core rail to the I/O rail (see Figure 4−7).

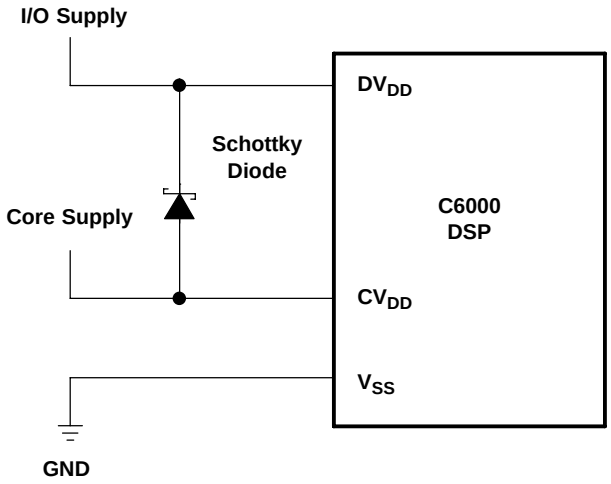

Figure 4−7. Schottky Diode Diagram

Core and I/O supply voltage regulators should be located close to the DSP (or DSP array) to minimize inductance and resistance in the power delivery path. Additionally, when designing for high-performance applications utilizing the C6000™ platform of DSPs, the PC board should include separate power planes for core, I/O, and ground, all bypassed with high-quality low-ESL/ESR capacitors.

4.3.3 Power-Supply Decoupling

In order to properly decouple the supply planes from system noise, place as many capacitors (caps) as possible close to the DSP. Assuming 0603 caps, the user should be able to fit a total of 60 caps, 30 for the core supply and 30 for the I/O supply. These caps need to be close to the DSP power pins, no more than 1.25 cm maximum distance to be effective. Physically smaller caps, such as 0402, are better because of their lower parasitic inductance. Proper capacitance values are also important. Small bypass caps (near 560 pF) should be closest to the power pins. Medium bypass caps (220 nF or as large as can be obtained in a small package) should be next closest. TI recommends no less than 8 small and 8 medium caps per supply (32 total) be placed immediately next to the BGA vias, using the “interior” BGA space and at least the corners of the “exterior”.

Eight larger caps (4 for each supply) can be placed further away for bulk decoupling. Large bulk caps (on the order of 100 μF) should be furthest away (but still as close as possible). No less than 4 large caps per supply (8 total) should be placed outside of the BGA.

Any cap selection needs to be evaluated from a yield/manufacturing point-of-view. As with the selection of any component, verification of capacitor availability over the product’s production lifetime should be considered.

4.3.4 Peripheral Power-Down Operation

The DM641/DM640 device can be powered down in three ways:

- Power-down due to pin configuration
- Power-down due to software configuration − relates to the default state of the peripheral configuration bits in the PERCFG register.
- Power-down during run-time via software configuration

On the DM641/DM640 device, the EMAC and MDIO peripherals are controlled (selected) at the pin level during chip reset (e.g., using the MAC_EN pin).

The McASP0, McBSP0, McBSP1, VP0, VP1 [DM641 only], and I2C0 peripheral functions are selected via the peripheral configuration (PERCFG) register bits.

For more detailed information on the peripheral configuration pins and the PERCFG register bits, see the Device Configurations section of this document.

4.3.5 Power-Down Modes Logic

Figure 4−8 shows the power-down mode logic on the DM641/DM640.

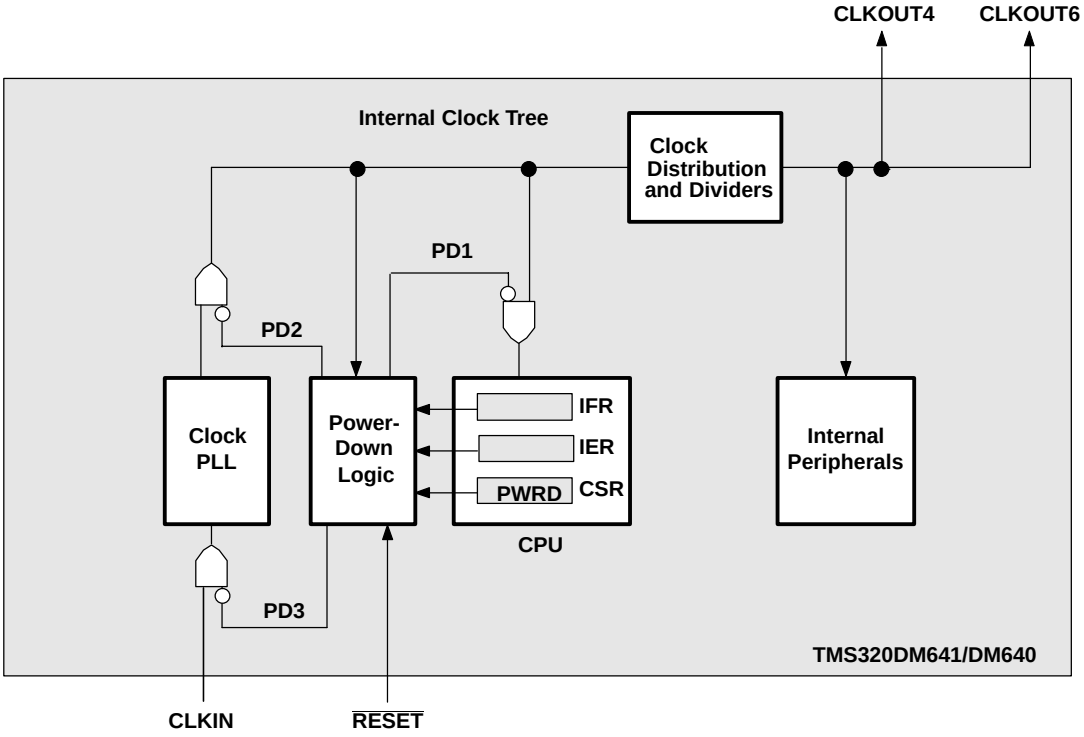

† External input clocks, with the exception of CLKIN, are *not* gated by the power-down mode logic.

Figure 4−8. Power-Down Mode Logic†

4.3.6 Triggering, Wake-up, and Effects

The power-down modes and their wake-up methods are programmed by setting the PWRD field (bits 15−10) of the control status register (CSR). The PWRD field of the CSR is shown in Figure 4−9 and described in Table 4−2. When writing to the CSR, all bits of the PWRD field should be set at the same time. Logic 0 should be used when writing to the reserved bit (bit 15) of the PWRD field. The CSR is discussed in detail in the *TMS320C6000 CPU and Instruction Set Reference Guide* (literature number SPRU189).

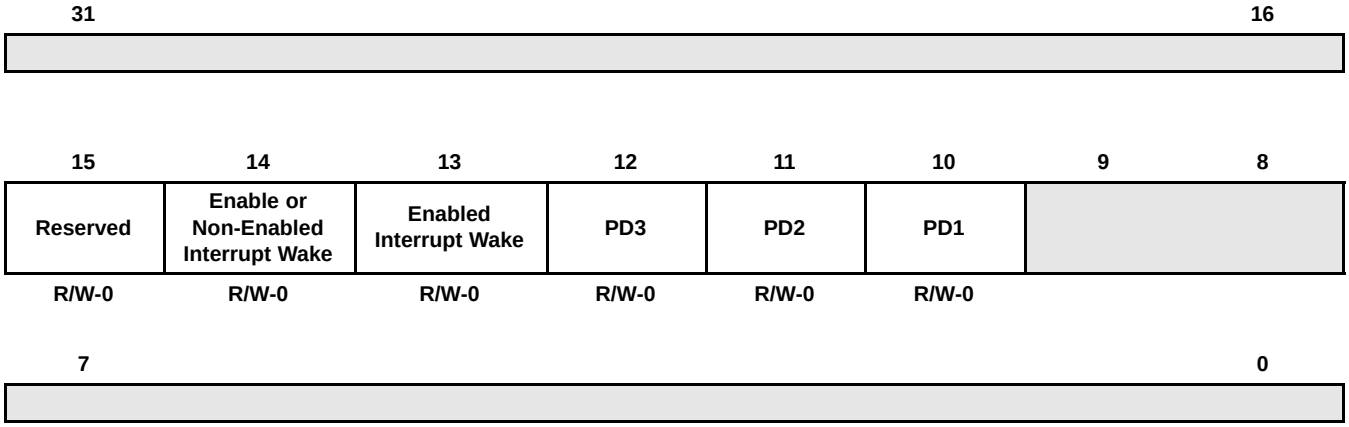

Legend: R/W−x = Read/write reset value

NOTE: The shadowed bits are not part of the power-down logic discussion and therefore are not covered here. For information on these other bit fields in the CSR register, see the *TMS320C6000 CPU and Instruction Set Reference Guide* (literature number SPRU189).

Figure 4−9. PWRD Field of the CSR Register

A delay of up to nine clock cycles may occur after the instruction that sets the PWRD bits in the CSR before the PD mode takes effect. As best practice, NOPs should be padded after the PWRD bits are set in the CSR to account for this delay.

If PD1 mode is terminated by a non-enabled interrupt, the program execution returns to the instruction where PD1 took effect. If PD1 mode is terminated by an enabled interrupt, the interrupt service routine will be executed first, then the program execution returns to the instruction where PD1 took effect. In the case with an enabled interrupt, the GIE bit in the CSR and the NMIE bit in the interrupt enable register (IER) must also be set in order for the interrupt service routine to execute; otherwise, execution returns to the instruction where PD1 took effect upon PD1 mode termination by an enabled interrupt.

PD2 and PD3 modes can only be aborted by device reset. Table 4−2 summarizes all the power-down modes.

Table 4−2. Characteristics of the Power-Down Modes

PRWD FIELD (BITS 15−10)	POWER-DOWN MODE	WAKE-UP METHOD	EFFECT ON CHIP'S OPERATION
000000	No power-down	—	—
001001	PD1	Wake by an enabled interrupt	CPU halted (except for the interrupt logic) Power-down mode blocks the internal clock inputs at the boundary of the CPU, preventing most of the CPU's logic from switching. During PD1, EDMA transactions can proceed between peripherals and internal memory.
010001	PD1	Wake by an enabled or non-enabled interrupt	
011010	PD2†	Wake by a device reset	Output clock from PLL is halted, stopping the internal clock structure from switching and resulting in the entire chip being halted. All register and internal RAM contents are preserved. All functional I/O "freeze" in the last state when the PLL clock is turned off.
011100	PD3†	Wake by a device reset	Input clock to the PLL stops generating clocks. All register and internal RAM contents are preserved. All functional I/O "freeze" in the last state when the PLL clock is turned off. Following reset, the PLL needs time to re-lock, just as it does following power-up. Wake-up from PD3 takes longer than wake-up from PD2 because the PLL needs to be re-locked, just as it does following power-up.
All others	Reserved	—	—

† When entering PD2 and PD3, all functional I/O remains in the previous state. However, for peripherals which are asynchronous in nature or peripherals with an external clock source, output signals may transition in response to stimulus on the inputs. Under these conditions, peripherals will not operate according to specifications.

4.3.7 C64x Power-Down Mode with an Emulator

If user power-down modes are programmed, and an emulator is attached, the modes will be masked to allow the emulator access to the system. This condition prevails until the emulator is reset or the cable is removed from the header. If power measurements are to be performed when in a power-down mode, the emulator cable should be removed.

When the DSP is in power-down mode PD2 or PD3, emulation logic will force any emulation execution command (such as Step or Run) to spin in IDLE. For this reason, PC writes (such as loading code) will fail. A DSP reset will be required to get the DSP out of PD2/PD3.

4.4 Enhanced Direct Memory Access (EDMA) Controller

The EDMA controller handles all data transfers between the level-two (L2) cache/memory controller and the device peripherals on the DM641/DM640 DSP. These data transfers include cache servicing, non-cacheable memory accesses, user-programmed data transfers, and host accesses.

4.4.1 EDMA Device-Specific Information

4.4.1.1 EDMA Channel Synchronization Events

The C64x EDMA supports up to 64 EDMA channels which service peripheral devices and external memory. Table 4−3 lists the source of C64x EDMA synchronization events associated with each of the programmable EDMA channels. For the DM641/DM640 device, the association of an event to a channel is fixed; each of the EDMA channels has one specific event associated with it. These specific events are captured in the EDMA event registers (ERL, ERH) even if the events are disabled by the EDMA event enable registers (EERL, EERH). The priority of each event can be specified independently in the transfer parameters stored in the EDMA parameter RAM. For more detailed information on the EDMA module and how EDMA events are enabled, captured, processed, linked, chained, and cleared, etc., see the *TMS320C6000 DSP Enhanced Direct Memory Access (EDMA) Controller Reference Guide* (literature number SPRU234).

Table 4−3. TMS320DM641/DM640 EDMA Channel Synchronization Events†

EDMA CHANNEL	EVENT NAME	EVENT DESCRIPTION
0	DSP_INT	HPI-to-DSP interrupt [For DM641 Only; “None” for DM640]
1	TINT0	Timer 0 interrupt
2	TINT1	Timer 1 interrupt
3	SD_INTA	EMIFA SDRAM timer interrupt
4	GPINT4/EXT_INT4	GP0 event 4/External interrupt pin 4
5	GPINT5/EXT_INT5	GP0 event 5/External interrupt pin 5
6	GPINT6/EXT_INT6	GP0 event 6/External interrupt pin 6
7	GPINT7/EXT_INT7	GP0 event 7/External interrupt pin 7
8	GPINT0	GP0 event 0
9	GPINT1	GP0 event 1
10	GPINT2	GP0 event 2
11	GPINT3	GP0 event 3
12	XEVT0	McBSP0 transmit event
13	REVT0	McBSP0 receive event
14	XEVT1	McBSP1 transmit event
15	REVT1	McBSP1 receive event
16	VP0EVTYA	VP0 Channel A Y event DMA request
17	VP0EVTUA	VP0 Channel A Cb event DMA request
18	VP0EVTVA	VP0 Channel A Cr event DMA request
19	TINT2	Timer 2 interrupt
20−31	–	None
32	AXEVTE0	McASP0 transmit even event
33	AXEVTO0	McASP0 transmit odd event
34	AXEVT0	McASP0 transmit event
35	AREVTE0	McASP0 receive even event
36	AREVTO0	McASP0 receive odd event
37	AREVT0	McASP0 receive event
38−43	–	None
44	ICREVT0	I2C0 receive event
45	ICXEVT0	I2C0 transmit event
46−47	–	None
48	GPINT8	GP0 event 8
49	GPINT9	GP0 event 9
50	GPINT10	GP0 event 10
51	GPINT11	GP0 event 11
52	GPINT12	GP0 event 12
53	GPINT13	GP0 event 13
54	GPINT14	GP0 event 14
55	GPINT15	GP0 event 15
56	VP1EVTYA	VP1 Channel A Y event DMA request [For DM641 Only; “None” for DM640]

† In addition to the events shown in this table, each of the 64 channels can also be synchronized with the transfer completion or alternate transfer completion events. For more detailed information on EDMA event-transfer chaining, see the *TMS320C6000 DSP Enhanced Direct Memory Access (EDMA) Controller Reference Guide* (literature number SPRU234).

Table 4−3. TMS320DM641/DM640 EDMA Channel Synchronization Events† (Continued)

EDMA CHANNEL	EVENT NAME	EVENT DESCRIPTION
57	VP1EVTUA	VP1 Channel A Cb event DMA request [For DM641 Only; “None” for DM640]
58	VP1EVTVA	VP1 Channel A Cr event DMA request [For DM641 Only; “None” for DM640]
59−63	–	None

† In addition to the events shown in this table, each of the 64 channels can also be synchronized with the transfer completion or alternate transfer completion events. For more detailed information on EDMA event-transfer chaining, see the *TMS320C6000 DSP Enhanced Direct Memory Access (EDMA) Controller Reference Guide* (literature number SPRU234).

4.4.2 *EDMA Peripheral Register Description(s)*

Table 4−4. EDMA Registers (C64x)

HEX ADDRESS RANGE	ACRONYM	REGISTER NAME
01A0 0800 − 01A0 FF98	−	Reserved
01A0 FF9C	EPRH	Event polarity high register
01A0 FFA4	CIPRH	Channel interrupt pending high register
01A0 FFA8	CIERH	Channel interrupt enable high register
01A0 FFAC	CCERH	Channel chain enable high register
01A0 FFB0	ERH	Event high register
01A0 FFB4	EERH	Event enable high register
01A0 FFB8	ECRH	Event clear high register
01A0 FFBC	ESRH	Event set high register
01A0 FFC0	PQAR0	Priority queue allocation register 0
01A0 FFC4	PQAR1	Priority queue allocation register 1
01A0 FFC8	PQAR2	Priority queue allocation register 2
01A0 FFCC	PQAR3	Priority queue allocation register 3
01A0 FFDC	EPRL	Event polarity low register
01A0 FFE0	PQSR	Priority queue status register
01A0 FFE4	CIPRL	Channel interrupt pending low register
01A0 FFE8	CIERL	Channel interrupt enable low register
01A0 FFEC	CCERL	Channel chain enable low register
01A0 FFF0	ERL	Event low register
01A0 FFF4	EERL	Event enable low register
01A0 FFF8	ECRL	Event clear low register
01A0 FFFC	ESRL	Event set low register
01A1 0000 − 01A3 FFFF	–	Reserved

Table 4−5. Quick DMA (QDMA) and Pseudo Registers

HEX ADDRESS RANGE	ACRONYM	REGISTER NAME
0200 0000	QOPT	QDMA options parameter register
0200 0004	QSRC	QDMA source address register
0200 0008	QCNT	QDMA frame count register
0200 000C	QDST	QDMA destination address register
0200 0010	QIDX	QDMA index register
0200 0014 − 0200 001C		Reserved
0200 0020	QSOPT	QDMA pseudo options register
0200 0024	QSSRC	QDMA psuedo source address register
0200 0028	QSCNT	QDMA psuedo frame count register
0200 002C	QSDST	QDMA destination address register
0200 0030	QSIDX	QDMA psuedo index register

Table 4−6. EDMA Parameter RAM (C64x)†

HEX ADDRESS RANGE	ACRONYM	REGISTER NAME	COMMENTS
01A0 0000 − 01A0 0017	−	Parameters for Event 0 (6 words)	Parameters for Event 0 (6 words) or Reload/Link Parameters for other Event
01A0 0018 − 01A0 002F	−	Parameters for Event 1 (6 words)	
01A0 0030 − 01A0 0047	−	Parameters for Event 2 (6 words)	
01A0 0048 − 01A0 005F	−	Parameters for Event 3 (6 words)	
01A0 0060 − 01A0 0077	−	Parameters for Event 4 (6 words)	
01A0 0078 − 01A0 008F	−	Parameters for Event 5 (6 words)	
01A0 0090 − 01A0 00A7	−	Parameters for Event 6 (6 words)	
01A0 00A8 − 01A0 00BF	−	Parameters for Event 7 (6 words)	
01A0 00C0 − 01A0 00D7	−	Parameters for Event 8 (6 words)	
01A0 00D8 − 01A0 00EF	−	Parameters for Event 9 (6 words)	
01A0 00F0 − 01A0 00107	−	Parameters for Event 10 (6 words)	
01A0 0108 − 01A0 011F	−	Parameters for Event 11 (6 words)	
01A0 0120 − 01A0 0137	−	Parameters for Event 12 (6 words)	
01A0 0138 − 01A0 014F	−	Parameters for Event 13 (6 words)	
01A0 0150 − 01A0 0167	−	Parameters for Event 14 (6 words)	
01A0 0168 − 01A0 017F	−	Parameters for Event 15 (6 words)	
01A0 0150 − 01A0 0167	−	Parameters for Event 16 (6 words)	
01A0 0168 − 01A0 017F	−	Parameters for Event 17 (6 words)	
...		...	
01A0 05D0 − 01A0 05E7	−	Parameters for Event 62 (6 words)	
01A0 05E8 − 01A0 05FF	−	Parameters for Event 63 (6 words)	
01A0 0600 − 01A0 0617	−	Reload/link parameters for Event 0 (6 words)	Reload/Link Parameters for other Event 0−15
01A0 0618 − 01A0 062F	−	Reload/link parameters for Event 1 (6 words)	
...		...	
01A0 07E0 − 01A0 07F7	−	Reload/link parameters for Event 20 (6 words)	
01A0 07F8 − 01A0 080F	−	Reload/link parameters for Event 21 (6 words)	
01A0 0810 − 01A0 0827	−	Reload/link parameters for Event 22 (6 words)	
...		...	
01A0 13C8 − 01A0 13DF	−	Reload/link parameters for Event 147 (6 words)	
01A0 13E0 − 01A0 13F7	−	Reload/link parameters for Event 148 (6 words)	
01A0 13F8 − 01A0 13FF	−	Scratch pad area (2 words)	
01A0 1400 − 01A3 FFFF	−	Reserved	

† The DM641/DM640 device has 213 EDMA parameters total: 64-Event/Reload channels and 149-Reload only parameter sets [six (6) words each] that can be used to reload/link EDMA transfers.

4.5 Interrupts

4.5.1 Interrupt Sources and Interrupt Selector

The C64x DSP core supports 16 prioritized interrupts, which are listed in Table 4−7. The highest-priority interrupt is INT_00 (dedicated to RESET) while the lowest-priority interrupt is INT_15. The first four interrupts (INT_00−INT_03) are non-maskable and fixed. The remaining interrupts (INT_04−INT_15) are maskable and default to the interrupt source specified in Table 4−7. The interrupt source for interrupts 4−15 can be programmed by modifying the selector value (binary value) in the corresponding fields of the Interrupt Selector Control registers: MUXH (address 0x019C0000) and MUXL (address 0x019C0004).

Table 4−7. DM641/DM640 DSP Interrupts

CPU INTERRUPT NUMBER	INTERRUPT SELECTOR CONTROL REGISTER	SELECTOR VALUE (BINARY)	INTERRUPT EVENT	INTERRUPT SOURCE
INT_00†	−	−	RESET	
INT_01†	−	−	NMI	
INT_02†	−	−	Reserved	Reserved. Do not use.
INT_03†	−	−	Reserved	Reserved. Do not use.
INT_04‡	MUXL[4:0]	00100	GPINT4/EXT_INT4	GP0 interrupt 4/External interrupt pin 4
INT_05‡	MUXL[9:5]	00101	GPINT5/EXT_INT5	GP0 interrupt 5/External interrupt pin 5
INT_06‡	MUXL[14:10]	00110	GPINT6/EXT_INT6	GP0 interrupt 6/External interrupt pin 6
INT_07‡	MUXL[20:16]	00111	GPINT7/EXT_INT7	GP0 interrupt 7/External interrupt pin 7
INT_08‡	MUXL[25:21]	01000	EDMA_INT	EDMA channel (0 through 63) interrupt
INT_09‡	MUXL[30:26]	01001	EMU_DTDMA	EMU DTDMA
INT_10‡	MUXH[4:0]	00011	SD_INTA	EMIFA SDRAM timer interrupt
INT_11‡	MUXH[9:5]	01010	EMU_RTDXRX	EMU real-time data exchange (RTDX) receive
INT_12‡	MUXH[14:10]	01011	EMU_RTDXTX	EMU RTDX transmit
INT_13‡	MUXH[20:16]	00000	DSP_INT	HPI-to-DSP interrupt [DM641 Only]
INT_14‡	MUXH[25:21]	00001	TINT0	Timer 0 interrupt
INT_15‡	MUXH[30:26]	00010	TINT1	Timer 1 interrupt
−	−	01100	XINT0	McBSP0 transmit interrupt
−	−	01101	RINT0	McBSP0 receive interrupt
−	−	01110	XINT1	McBSP1 transmit interrupt
−	−	01111	RINT1	McBSP1 receive interrupt
−	−	10000	GPINT0	GP0 interrupt 0
−	−	10001	Reserved	Reserved. Do not use.
−	−	10010	Reserved	Reserved. Do not use.
−	−	10011	TINT2	Timer 2 interrupt
−	−	10100	Reserved	Reserved. Do not use.
−	−	10101	Reserved	Reserved. Do not use.
−	−	10110	ICINT0	I2C0 interrupt
−	−	10111	Reserved	Reserved. Do not use.
−	−	11000	EMAC_MDIO_INT	EMAC/MDIO interrupt
−	−	11001	VPINT0	VP0 interrupt

† Interrupts INT_00 through INT_03 are non-maskable and fixed.

‡ Interrupts INT_04 through INT_15 are programmable by modifying the binary selector values in the Interrupt Selector Control registers fields. Table 4−7 shows the default interrupt sources for Interrupts INT_04 through INT_15. For more detailed information on interrupt sources and selection, see the *TMS320C6000 DSP Interrupt Selector Reference Guide* (literature number SPRU646).

Table 4−7. DM641/DM640 DSP Interrupts (Continued)

CPU INTERRUPT NUMBER	INTERRUPT SELECTOR CONTROL REGISTER	SELECTOR VALUE (BINARY)	INTERRUPT EVENT	INTERRUPT SOURCE
–	–	11010	VPINT1	VP1 interrupt [DM641 Only]
–	–	11011	Reserved	Reserved. Do not use.
–	–	11100	AXINT0	McASP0 transmit interrupt
–	–	11101	ARINT0	McASP0 receive interrupt
–	–	11110 − 11111	Reserved	Reserved. Do not use.

† Interrupts INT_00 through INT_03 are non-maskable and fixed.
‡ Interrupts INT_04 through INT_15 are programmable by modifying the binary selector values in the Interrupt Selector Control registers fields. Table 4−7 shows the default interrupt sources for Interrupts INT_04 through INT_15. For more detailed information on interrupt sources and selection, see the *TMS320C6000 DSP Interrupt Selector Reference Guide* (literature number SPRU646).

4.5.2 Interrupts Peripheral Register Description(s)

Table 4−8. Interrupt Selector Registers (C64x)

HEX ADDRESS RANGE	ACRONYM	REGISTER NAME	COMMENTS
019C 0000	MUXH	Interrupt multiplexer high	Selects which interrupts drive CPU interrupts 10−15 (INT10−INT15)
019C 0004	MUXL	Interrupt multiplexer low	Selects which interrupts drive CPU interrupts 4−9 (INT04−INT09)
019C 0008	EXTPOL	External interrupt polarity	Sets the polarity of the external interrupts (EXT_INT4−EXT_INT7)
019C 000C − 019F FFFF	–	Reserved	

4.5.3 External Interrupts Electrical Data/Timing

Table 4−9. Timing Requirements for External Interrupts† (see Figure 4−10)

NO.			−400 −500 −600		UNIT
			MIN	MAX	
1	$t_{w(ILOW)}$	Width of the NMI interrupt pulse low	4P		ns
		Width of the EXT_INT interrupt pulse low	8P		ns
2	$t_{w(IHIGH)}$	Width of the NMI interrupt pulse high	4P		ns
		Width of the EXT_INT interrupt pulse high	8P		ns

† P = 1/CPU clock frequency in ns. For example, when running parts at 600 MHz, use P = 1.67 ns.

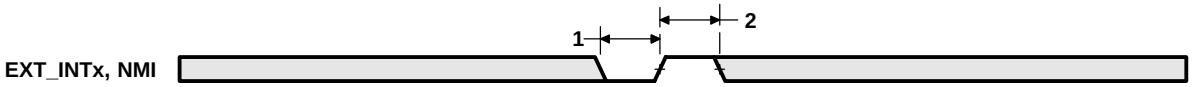

Figure 4−10. External/NMI Interrupt Timing

4.6 Reset

A hardware reset ($\overline{\text{RESET}}$) is required to place the DSP into a known good state out of power-up. The $\overline{\text{RESET}}$ signal can be asserted (pulled low) prior to ramping the core and I/O voltages or after the core and I/O voltages have reached their proper operating conditions. As a best practice, reset should be held low during power-up. Prior to deasserting $\overline{\text{RESET}}$ (low-to-high transition), the core and I/O voltages should be at their proper operating conditions and CLKIN should also be running at the correct frequency.

For information on peripheral selection at the rising edge of RESET, see the Device Configuration section of this data manual.

4.6.1 Reset Electrical Data/Timing

Table 4−10. Timing Requirements for Reset (see Figure 4−11)

NO.			−400 −500 −600		UNIT
			MIN	MAX	
1	$t_{w(RST)}$	Width of the RESET pulse	250		µs
16	$t_{su(boot)}$	Setup time, boot configuration bits valid before RESET high†	4E or 4C‡		ns
17	$t_{h(boot)}$	Hold time, boot configuration bits valid after RESET high†	4P§		ns

† AEA[22:19], LENDIAN, and HD5 are the boot configuration pins during device reset.
‡ E = 1/AECLKIN clock frequency in ns. C = 1/CLKIN clock frequency in ns.
Select the MIN parameter value, whichever value is larger.
§ P = 1/CPU clock frequency in ns. For example, when running parts at 600 MHz, use P = 1.67 ns.

Table 4−11. Switching Characteristics Over Recommended Operating Conditions During Reset§¶# (see Figure 4−11)

NO.	PARAMETER		−400 −500 −600		UNIT
			MIN	MAX	
2	$t_{d(RSTL-ECKI)}$	Delay time, RESET low to AECLKIN synchronized internally	2E	3P + 20E	ns
3	$t_{d(RSTH-ECKI)}$	Delay time, RESET high to AECLKIN synchronized internally	2E	8P + 20E	ns
4	$t_{d(RSTL-ECKO1HZ)}$	Delay time, RESET low to AECLKOUT1 high impedance	2E		ns
5	$t_{d(RSTH-ECKO1V)}$	Delay time, RESET high to AECLKOUT1 valid		8P + 20E	ns
6	$t_{d(RSTL-EMIFZHZ)}$	Delay time, RESET low to EMIF Z high impedance	2E	3P + 4E	ns
7	$t_{d(RSTH-EMIFZV)}$	Delay time, RESET high to EMIF Z valid	16E	8P + 20E	ns
8	$t_{d(RSTL-EMIFHIV)}$	Delay time, RESET low to EMIF high group invalid	2E		ns
9	$t_{d(RSTH-EMIFHV)}$	Delay time, RESET high to EMIF high group valid		8P + 20E	ns
10	$t_{d(RSTL-EMIFLIV)}$	Delay time, RESET low to EMIF low group invalid	2E		ns
11	$t_{d(RSTH-EMIFLV)}$	Delay time, RESET high to EMIF low group valid		8P + 20E	ns
12	$t_{d(RSTL-LOWIV)}$	Delay time, RESET low to low group invalid	0		ns
13	$t_{d(RSTH-LOWV)}$	Delay time, RESET high to low group valid		11P	ns
14	$t_{d(RSTL-ZHZ)}$	Delay time, RESET low to Z group high impedance	0		ns
15	$t_{d(RSTH-ZV)}$	Delay time, RESET high to Z group valid	2P	8P	ns

§ P = 1/CPU clock frequency in ns. For example, when running parts at 600 MHz, use P = 1.67 ns.
¶ E = the EMIF input clock (AECLKIN, CPU/4 clock, or CPU/6 clock) period in ns for EMIFA.
# EMIF Z group consists of: AEA[22:3], AED[31:0], ACE[3:0], ABE[3:0], AARE/ASDCAS/ASADS/ASRE,AAWE/ASDWE/ASWE, AAOE/ASDRAS/ASOE, ASOE3, ASDCKE, and APDT.
EMIF high group consists of: AHOLDA (when the corresponding AHOLD input is high)
EMIF low group consists of: ABUSREQ; AHOLDA (when the corresponding AHOLD input is low)
Low group consists of:
Z group consists of: HD[15:0], VP0D[0]/CLKX0, VP0D[1]/FSX0, VP0D[2]/DX0, CLKR0, VP0D[5]/FSR0, TOUT0, TOUT1, VDAC, GP0[7:0], HR/W, HDS2, HDS1, HCS, HCNTL1, HAS, HCNTL0, HHWIL (16-bit HPI mode only), HRDY, HINT, and VP0D[4,3].
VP1 signals apply to DM641 only:
VP1D[0]/CLKX1, VP1D[1]/FSX1, VP1D[2]/DX1, VP1D[6]/CLKR1, VP1D[5]/FSR1, and VP1D[4,3].

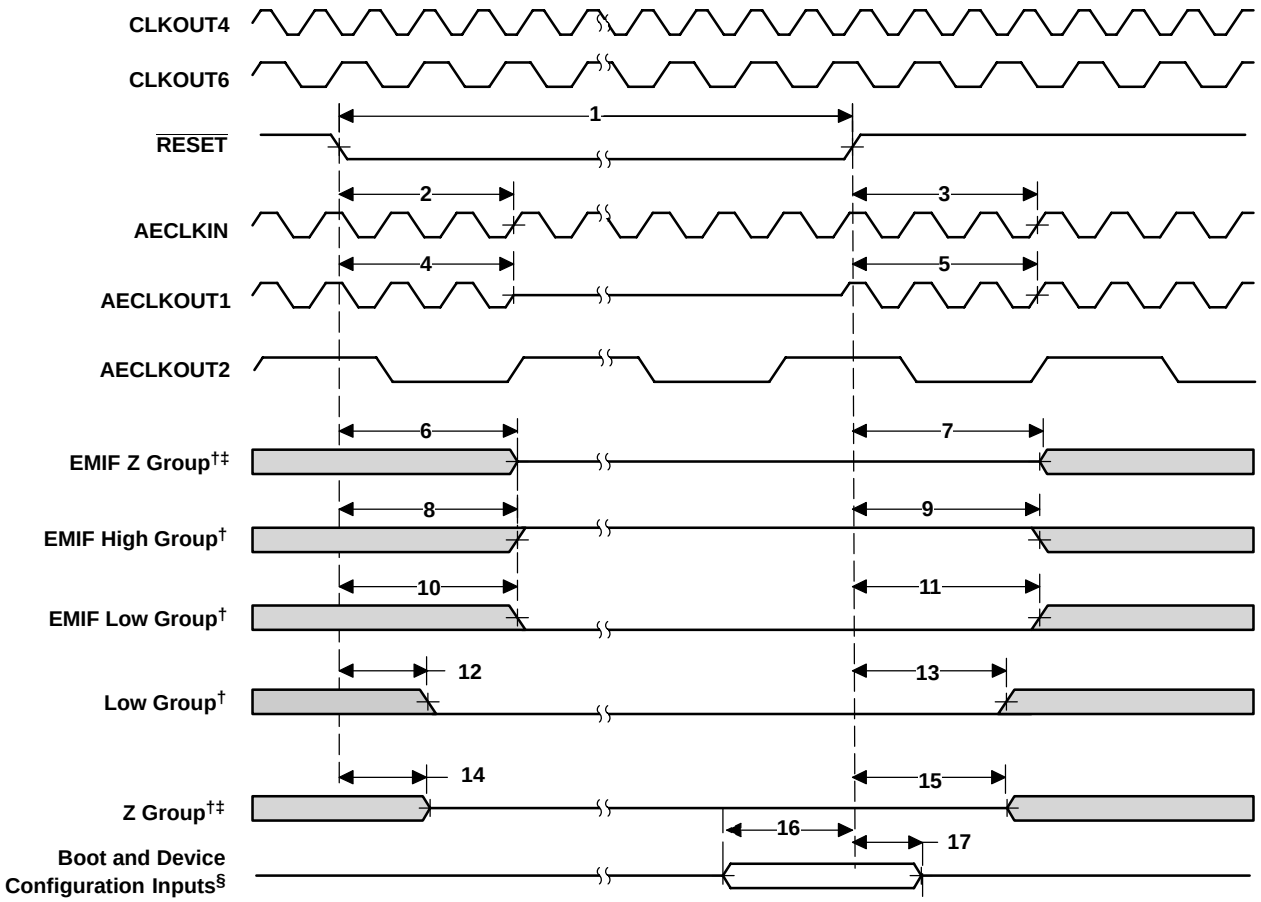

† EMIF Z group consists of: AEA[22:3], AED[31:0], $\overline{\text{ACE}}$[3:0], $\overline{\text{ABE}}$[3:0], $\overline{\text{AARE}}$/ASDCAS/ASADS/ASRE,$\overline{\text{AAWE}}$/ASDWE/ASWE, $\overline{\text{AAOE}}$/ASDRAS/ASOE, $\overline{\text{ASOE3}}$, ASDCKE, and $\overline{\text{APDT}}$.

EMIF high group consists of: $\overline{\text{AHOLDA}}$ (when the corresponding $\overline{\text{AHOLD}}$ input is high)

EMIF low group consists of: ABUSREQ; $\overline{\text{AHOLDA}}$ (when the corresponding $\overline{\text{AHOLD}}$ input is low)

Low group consists of:

Z group consists of: HD[15:0], VP0D[0]/CLKX0, VP0D[1]/FSX0, VP0D[2]/DX0, CLKR0, VP0D[5]/FSR0, TOUT0, TOUT1, VDAC, GP0[7:0], HR/$\overline{\text{W}}$, $\overline{\text{HDS2}}$, $\overline{\text{HDS1}}$, $\overline{\text{HCS}}$, HCNTL1, $\overline{\text{HAS}}$, HCNTL0, HHWIL (16-bit HPI mode only), $\overline{\text{HRDY}}$, $\overline{\text{HINT}}$, and VP0D[4,3].

VP1 signals apply to DM641 only:

VP1D[0]/CLKX1, VP1D[1]/FSX1, VP1D[2]/DX1, VP1D[6]/CLKR1, VP1D[5]/FSR1, and VP1D[4,3].

‡ If AEA[22:19], LENDIAN, and HD5 pins are actively driven, care must be taken to ensure no timing contention between parameters 6, 7, 14, 15, 16, and 17.

§ Boot and Device Configurations Inputs (during reset) include: AEA[22:19], LENDIAN, and HD5.

Figure 4−11. Reset Timing†

4.7 Clock PLL

The PLL controller features hardware-configurable PLL multiplier controller, dividers (/2, /4, /6, and /8), and reset controller. The PLL controller accepts an input clock, as determined by the logic state on the CLKMODE[1:0] pins, from the CLKIN pin. The resulting clock outputs are passed to the DSP core, peripherals, and other modules inside the C6000™ DSP.

4.7.1 Clock PLL Device-Specific Information

Most of the internal C64x™ DSP clocks are generated from a single source through the CLKIN pin. This source clock either drives the PLL, which multiplies the source clock frequency to generate the internal CPU clock, or bypasses the PLL to become the internal CPU clock.

To use the PLL to generate the CPU clock, the external PLL filter circuit must be properly designed. Figure 4−12 shows the external PLL circuitry for either x1 (PLL bypass) or other PLL multiply modes.

To minimize the clock jitter, a single clean power supply should power both the C64x™ DSP device and the external clock oscillator circuit. The minimum CLKIN rise and fall times should also be observed. For the input clock timing requirements, see the *input and output clocks* electricals section.

Rise/fall times, duty cycles (high/low pulse durations), and the load capacitance of the external clock source must meet the DSP requirements in this data sheet (see the *electrical characteristics over recommended ranges of supply voltage and operating case temperature* table and the *input and output clocks* electricals section).

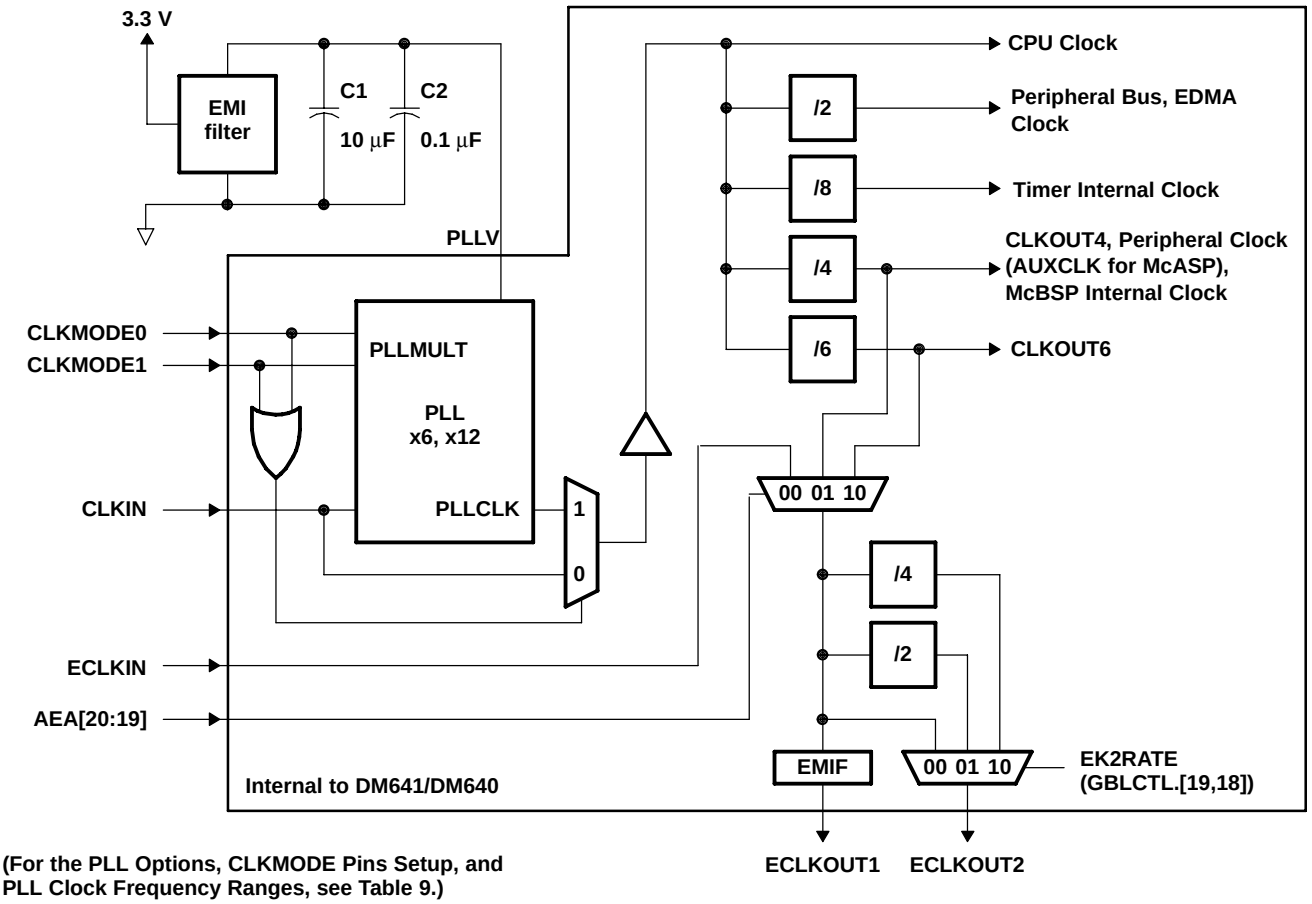

(For the PLL Options, CLKMODE Pins Setup, and PLL Clock Frequency Ranges, see Table 9.)

NOTES: A. Place all PLL external components (C1, C2, and the EMI Filter) as close to the C6000™ DSP device as possible. For the best performance, TI recommends that all the PLL external components be on a single side of the board without jumpers, switches, or components other than the ones shown.

B. For reduced PLL jitter, maximize the spacing between switching signals and the PLL external components (C1, C2, and the EMI Filter).

C. The 3.3-V supply for the EMI filter must be from the same 3.3-V power plane supplying the I/O voltage, DV_{DD}.

D. EMI filter manufacturer TDK part number ACF451832-333, -223, -153, -103. Panasonic part number EXCCET103U.

Figure 4−12. External PLL Circuitry for Either PLL Multiply Modes or x1 (Bypass) Mode

Table 4−12. TMS320DM641/DM640 PLL Multiply Factor Options, Clock Frequency Ranges, and Typical Lock Time†‡

GDK and ZDK PACKAGES − 23 x 23 mm BGA, GNZ and ZNZ PACKAGES − 27 x 27 mm BGA							
CLKMODE1	CLKMODE0	CLKMODE (PLL MULTIPLY FACTORS)	CLKIN RANGE (MHz)	CPU CLOCK FREQUENCY RANGE (MHz)	CLKOUT4 RANGE (MHz)	CLKOUT6 RANGE (MHz)	TYPICAL LOCK TIME (μs)§
0	0	Bypass (x1)	30−75	30−75	7.5−18.8	5−12.5	N/A
0	1	x6	30−75	180−450	45−112.5	30−75	75
1	0	x12	30−50	360−600	90−150	60−100	
1	1	Reserved	−	−	−	−	−

† These clock frequency range values are applicable to a DM641−600 speed device. For −400, −500 device speed values, see the CLKIN timing requirements table for the specific device speed.

‡ Use external pullup resistors on the CLKMODE pins (CLKMODE1 and CLKMODE0) to set the DM641/DM640 device to one of the valid PLL multiply clock modes (x6 or x12). With internal pulldown resistors on the CLKMODE pins (CLKMODE1, CLKMODE0), the default clock mode is x1 (bypass).

§ Under some operating conditions, the maximum PLL lock time may vary by as much as 150% from the specified typical value. For example, if the typical lock time is specified as 100 μs, the maximum value may be as long as 250 μs.

4.7.2 Clock PLL Electrical Data/Timing (Input and Output Clocks)

Table 4−13. Timing Requirements for CLKIN for −400 Devices†‡§ (see Figure 4−13)

NO.			−400						UNIT
			PLL MODE x12		PLL MODE x6		x1 (BYPASS)		
			MIN	MAX	MIN	MAX	MIN	MAX	
1	$t_{c(CLKIN)}$	Cycle time, CLKIN	30	33.3	13.3	33.3	13.3	33.3	ns
2	$t_{w(CLKINH)}$	Pulse duration, CLKIN high	0.45C		0.45C		0.45C		ns
3	$t_{w(CLKINL)}$	Pulse duration, CLKIN low	0.45C		0.45C		0.45C		ns
4	$t_{t(CLKIN)}$	Transition time, CLKIN		5		5		1	ns
5	$t_{J(CLKIN)}$	Period jitter, CLKIN		0.02C		0.02C		0.02C	ns

† The reference points for the rise and fall transitions are measured at V_{IL} MAX and V_{IH} MIN.

‡ For more details on the PLL multiplier factors (x6, x12), see the *Clock PLL* section of this data sheet.

§ C = CLKIN cycle time in ns. For example, when CLKIN frequency is 50 MHz, use C = 20 ns.

Table 4−14. Timing Requirements for CLKIN for −500 Devices†‡§ (see Figure 4−13)

NO.			−500						UNIT
			PLL MODE x12		PLL MODE x6		x1 (BYPASS)		
			MIN	MAX	MIN	MAX	MIN	MAX	
1	$t_{c(CLKIN)}$	Cycle time, CLKIN	24	33.3	13.3	33.3	13.3	33.3	ns
2	$t_{w(CLKINH)}$	Pulse duration, CLKIN high	0.45C		0.45C		0.45C		ns
3	$t_{w(CLKINL)}$	Pulse duration, CLKIN low	0.45C		0.45C		0.45C		ns
4	$t_{t(CLKIN)}$	Transition time, CLKIN		5		5		1	ns
5	$t_{J(CLKIN)}$	Period jitter, CLKIN		0.02C		0.02C		0.02C	ns

† The reference points for the rise and fall transitions are measured at V_{IL} MAX and V_{IH} MIN.

‡ For more details on the PLL multiplier factors (x6, x12), see the *Clock PLL* section of this data sheet.

§ C = CLKIN cycle time in ns. For example, when CLKIN frequency is 50 MHz, use C = 20 ns.

Table 4−15. Timing Requirements for CLKIN for −600 Devices†‡§ (see Figure 4−13)

NO.			−600						UNIT
			PLL MODE x12		PLL MODE x6		x1 (BYPASS)		
			MIN	MAX	MIN	MAX	MIN	MAX	
1	$t_{c(CLKIN)}$	Cycle time, CLKIN	20	33.3	13.3	33.3	13.3	33.3	ns
2	$t_{w(CLKINH)}$	Pulse duration, CLKIN high	0.45C		0.45C		0.45C		ns
3	$t_{w(CLKINL)}$	Pulse duration, CLKIN low	0.45C		0.45C		0.45C		ns
4	$t_{t(CLKIN)}$	Transition time, CLKIN		5		5		1	ns
5	$t_{J(CLKIN)}$	Period jitter, CLKIN		0.02C		0.02C		0.02C	ns

† The reference points for the rise and fall transitions are measured at V_{IL} MAX and V_{IH} MIN.
‡ For more details on the PLL multiplier factors (x6, x12), see the *Clock PLL* section of this data sheet.
§ C = CLKIN cycle time in ns. For example, when CLKIN frequency is 50 MHz, use C = 20 ns.

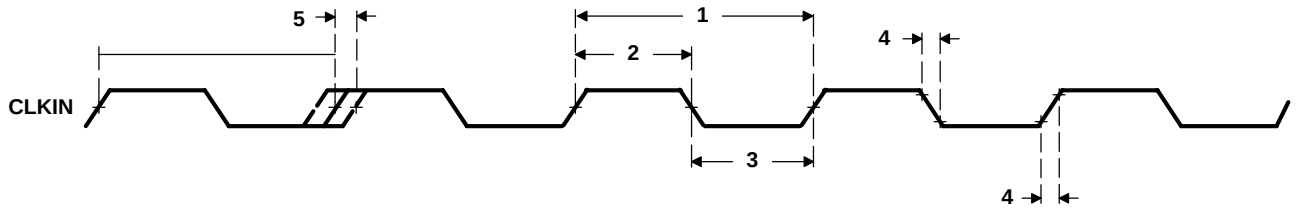

Figure 4−13. CLKIN Timing

Table 4−16. Switching Characteristics Over Recommended Operating Conditions for CLKOUT4†‡§ (see Figure 4−14)

NO.	PARAMETER		−400 −500 −600		UNIT
			CLKMODE = x1, x6, x12		
			MIN	MAX	
1	$t_{w(CKO4H)}$	Pulse duration, CLKOUT4 high	2P − 0.7	2P + 0.7	ns
2	$t_{w(CKO4L)}$	Pulse duration, CLKOUT4 low	2P − 0.7	2P + 0.7	ns
3	$t_{t(CKO4)}$	Transition time, CLKOUT4		1	ns

† The reference points for the rise and fall transitions are measured at V_{OL} MAX and V_{OH} MIN.
‡ PH is the high period of CLKIN in ns and PL is the low period of CLKIN in ns.
§ P = 1/CPU clock frequency in nanoseconds (ns)

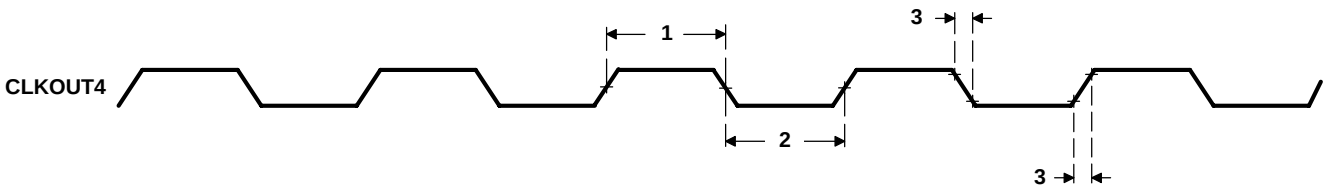

Figure 4−14. CLKOUT4 Timing

Table 4−17. Switching Characteristics Over Recommended Operating Conditions for CLKOUT6[†‡§] (see Figure 4−15)

NO.	PARAMETER		−400 −500 −600		UNIT
			CLKMODE = x1, x6, x12		
			MIN	MAX	
1	$t_{w(CKO6H)}$	Pulse duration, CLKOUT6 high	3P − 0.7	3P + 0.7	ns
2	$t_{w(CKO6L)}$	Pulse duration, CLKOUT6 low	3P − 0.7	3P + 0.7	ns
3	$t_{t(CKO6)}$	Transition time, CLKOUT6		1	ns

† The reference points for the rise and fall transitions are measured at V_{OL} MAX and V_{OH} MIN.
‡ PH is the high period of CLKIN in ns and PL is the low period of CLKIN in ns.
§ P = 1/CPU clock frequency in nanoseconds (ns)

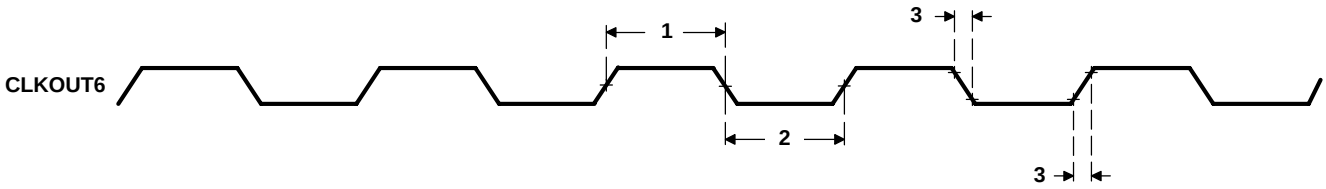

Figure 4−15. CLKOUT6 Timing

Table 4−18. Timing Requirements for AECLKIN for EMIFA[†‡§] (see Figure 4−16)

NO.			−400 −500 −600		UNIT
			MIN	MAX	
1	$t_{c(EKI)}$	Cycle time, AECLKIN	6[¶]	16P	ns
2	$t_{w(EKIH)}$	Pulse duration, AECLKIN high	2.7		ns
3	$t_{w(EKIL)}$	Pulse duration, AECLKIN low	2.7		ns
4	$t_{t(EKI)}$	Transition time, AECLKIN		3	ns
5	$t_{J(EKI)}$	Period jitter, AECLKIN		0.02E	ns

† P = 1/CPU clock frequency in ns. For example, when running parts at 600 MHz, use P = 1.67 ns.
‡ The reference points for the rise and fall transitions are measured at V_{IL} MAX and V_{IH} MIN.
§ E = the EMIF input clock (AECLKIN, CPU/4 clock, or CPU/6 clock) period in ns for EMIFA.
¶ Minimum AECLKIN cycle times *must* be met, even when AECLKIN is generated by an internal clock source. Minimum AECLKIN times are based on internal logic speed; the maximum useable speed of the EMIF may be lower due to AC timing requirements. On the 600 device, 133-MHz operation is achievable if the requirements of the EMIF Device Speed section are met. On the 400 and 500 devices, 100-MHz operation is achievable if the requirements of the EMIF Device Speed section are met.

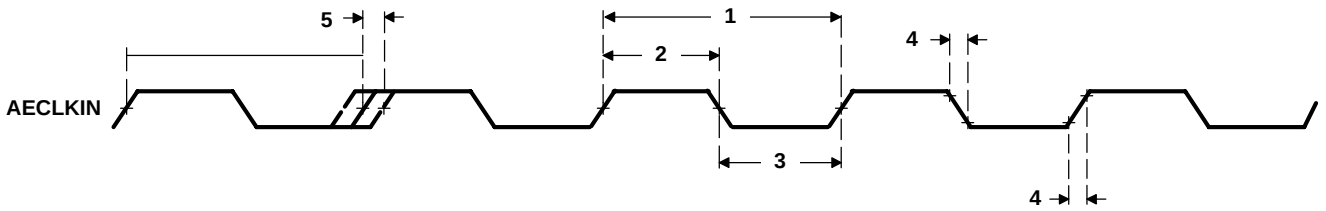

Figure 4−16. AECLKIN Timing for EMIFA

Table 4−19. Switching Characteristics Over Recommended Operating Conditions for AECLKOUT1 for the EMIFA Module[§#‖] (see Figure 4−17)

NO.	PARAMETER		−400 −500 −600		UNIT
			MIN	MAX	
1	$t_{w(EKO1H)}$	Pulse duration, AECLKOUT1 high	EH − 0.7	EH + 0.7	ns
2	$t_{w(EKO1L)}$	Pulse duration, AECLKOUT1 low	EL − 0.7	EL + 0.7	ns
3	$t_{t(EKO1)}$	Transition time, AECLKOUT1		1	ns
4	$t_{d(EKIH-EKO1H)}$	Delay time, AECLKIN high to AECLKOUT1 high	1	8	ns
5	$t_{d(EKIL-EKO1L)}$	Delay time, AECLKIN low to AECLKOUT1 low	1	8	ns

§ E = the EMIF input clock (AECLKIN, CPU/4 clock, or CPU/6 clock) period in ns for EMIFA.
# The reference points for the rise and fall transitions are measured at V_{OL} MAX and V_{OH} MIN.
‖ EH is the high period of E (EMIF input clock period) in ns and EL is the low period of E (EMIF input clock period) in ns for EMIFA.
☆This cycle-to-cycle jitter specification was measured with CPU/4 or CPU/6 as the source of the EMIF input clock.

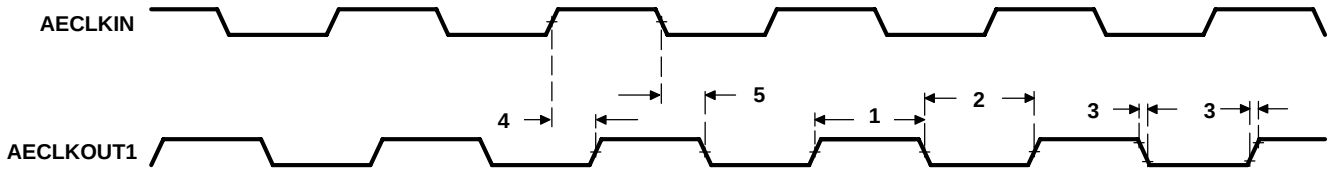

Figure 4−17. AECLKOUT1 Timing for the EMIFA Module

Table 4−20. Switching Characteristics Over Recommended Operating Conditions for AECLKOUT2 for the EMIFA Module[†‡] (see Figure 4−18)

NO.	PARAMETER		−400 −500 −600		UNIT
			MIN	MAX	
1	$t_{w(EKO2H)}$	Pulse duration, AECLKOUT2 high	0.5NE − 0.7	0.5NE + 0.7	ns
2	$t_{w(EKO2L)}$	Pulse duration, AECLKOUT2 low	0.5NE − 0.7	0.5NE + 0.7	ns
3	$t_{t(EKO2)}$	Transition time, AECLKOUT2		1	ns
4	$t_{d(EKIH-EKO2H)}$	Delay time, AECLKIN high to AECLKOUT2 high	1	8	ns
5	$t_{d(EKIL-EKO2L)}$	Delay time, AECLKIN low to AECLKOUT2 low	1	8	ns

† The reference points for the rise and fall transitions are measured at V_{OL} MAX and V_{OH} MIN.
‡ E = the EMIF input clock (AECLKIN, CPU/4 clock, or CPU/6 clock) period in ns for EMIFA.
N = the EMIF input clock divider; N = 1, 2, or 4.
§ This cycle-to-cycle jitter specification was measured with CPU/4 or CPU/6 as the source of the EMIF input clock.

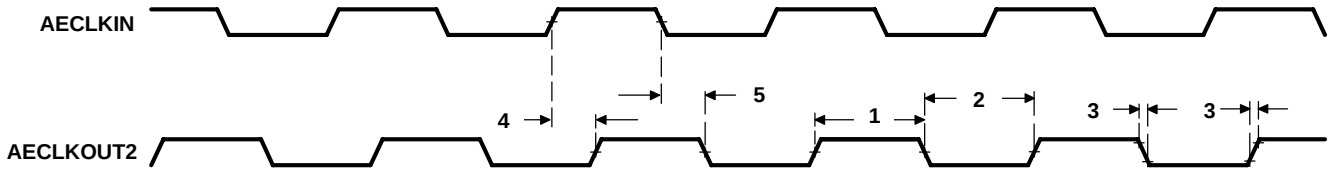

Figure 4−18. AECLKOUT2 Timing for the EMIFA Module

4.8 External Memory Interface (EMIIF)

EMIF supports a glueless interface to a variety of external devices, including:

- Pipelined synchronous-burst SRAM (SBSRAM)
- Synchronous DRAM (SDRAM)
- Asynchronous devices, including SRAM, ROM, and FIFOs
- An external shared-memory device

4.8.1 EMIF Device-Specific Information

EMIF Device Speed

The rated EMIF speed of these devices only applies to the SDRAM interface when in a system that meets the following requirements:

- 1 chip-enable (CE) space (maximum of 2 chips) of SDRAM connected to EMIF
- up to 1 CE space of buffers connected to EMIF
- EMIF trace lengths between 1 and 3 inches
- 166-MHz SDRAM for 133-MHz operation
- 143-MHz SDRAM for 100-MHz operation

Other configurations may be possible, but timing analysis must be done to verify all AC timings are met. Verification of AC timings is mandatory when using configurations other than those specified above. TI recommends utilizing I/O buffer information specification (IBIS) to analyze all AC timings.

To properly use IBIS models to attain accurate timing analysis for a given system, see the *Using IBIS Models for Timing Analysis* application report (literature number SPRA839).

To maintain signal integrity, serial termination resistors should be inserted into all EMIF output signal lines (see the Terminal Functions table for the EMIF output signals).

For more detailed information on the DM641/DM640 EMIF peripheral, see the *TMS320C6000 DSP External Memory Interface (EMIF) Reference Guide* (literature number SPRU266).

4.8.2 EMIF Peripheral Register Description(s)

Table 4−21. EMIFA Registers

HEX ADDRESS RANGE	ACRONYM	REGISTER NAME	COMMENTS
0180 0000	GBLCTL	EMIFA global control	
0180 0004	CECTL1	EMIFA CE1 space control	
0180 0008	CECTL0	EMIFA CE0 space control	
0180 000C	−	Reserved	
0180 0010	CECTL2	EMIFA CE2 space control	
0180 0014	CECTL3	EMIFA CE3 space control	
0180 0018	SDCTL	EMIFA SDRAM control	
0180 001C	SDTIM	EMIFA SDRAM refresh control	
0180 0020	SDEXT	EMIFA SDRAM extension	
0180 0024 − 0180 003C	−	Reserved	
0180 0040	PDTCTL	Peripheral device transfer (PDT) control	
0180 0044	CESEC1	EMIFA CE1 space secondary control	
0180 0048	CESEC0	EMIFA CE0 space secondary control	
0180 004C	−	Reserved	
0180 0050	CESEC2	EMIFA CE2 space secondary control	
0180 0054	CESEC3	EMIFA CE3 space secondary control	
0180 0058 − 0183 FFFF	–	Reserved	

4.8.3 EMIF Electrical Data/Timing

4.8.3.1 Asynchronous Memory Timing

Table 4−22. Timing Requirements for Asynchronous Memory Cycles for EMIFA Module[†‡] (see Figure 4−19 and Figure 4−20)

NO.			−400 −500 −600		UNIT
			MIN	MAX	
3	$t_{su(EDV-AREH)}$	Setup time, AEDx valid before $\overline{AARE}$ high	6.5		ns
4	$t_{h(AREH-EDV)}$	Hold time, AEDx valid after $\overline{AARE}$ high	1		ns
6	$t_{su(ARDY-EKO1H)}$	Setup time, AARDY valid before AECLKOUTx high	3		ns
7	$t_{h(EKO1H-ARDY)}$	Hold time, AARDY valid after AECLKOUTx high	2.5		ns

[†] To ensure data setup time, simply program the strobe width wide enough. AARDY is internally synchronized. The AARDY signal is *only* recognized two cycles before the end of the programmed strobe time and while AARDY is low, the strobe time is extended cycle-by-cycle. When AARDY is recognized low, the end of the strobe time is two cycles after AARDY is recognized high. To use AARDY as an asynchronous input, the pulse width of the AARDY signal should be wide enough (e.g., pulse width = 2E) to ensure setup and hold time is met.

[‡] RS = Read setup, RST = Read strobe, RH = Read hold, WS = Write setup, WST = Write strobe, WH = Write hold. These parameters are programmed via the EMIF CE space control registers.

Table 4−23. Switching Characteristics Over Recommended Operating Conditions for Asynchronous Memory Cycles for EMIFA Module[‡§¶] (see Figure 4−19 and Figure 4−20)

NO.	PARAMETER		−400 −500 −600		UNIT
			MIN	MAX	
1	$t_{osu(SELV-AREL)}$	Output setup time, select signals valid to $\overline{AARE}$ low	RS * E − 1.8		ns
2	$t_{oh(AREH-SELIV)}$	Output hold time, $\overline{AARE}$ high to select signals invalid	RH * E − 1.9		ns
5	$t_{d(EKO1H-AREV)}$	Delay time, AECLKOUTx high to $\overline{AARE}$ valid	1	7	ns
8	$t_{osu(SELV-AWEL)}$	Output setup time, select signals valid to $\overline{AAWE}$ low	WS * E − 2.0		ns
9	$t_{oh(AWEH-SELIV)}$	Output hold time, $\overline{AAWE}$ high to select signals invalid	WH * E − 2.5		ns
10	$t_{d(EKO1H-AWEV)}$	Delay time, AECLKOUTx high to $\overline{AAWE}$ valid	1.3	7.1	ns

[‡] RS = Read setup, RST = Read strobe, RH = Read hold, WS = Write setup, WST = Write strobe, WH = Write hold. These parameters are programmed via the EMIF CE space control registers.

[§] E = AECLKOUT1 period in ns for EMIFA

[¶] Select signals for EMIFA include: $\overline{ACEx}$, $\overline{ABE}$[3:0], AEA[22:3], $\overline{AAOE}$; and for EMIFA writes, include AED[31:0].

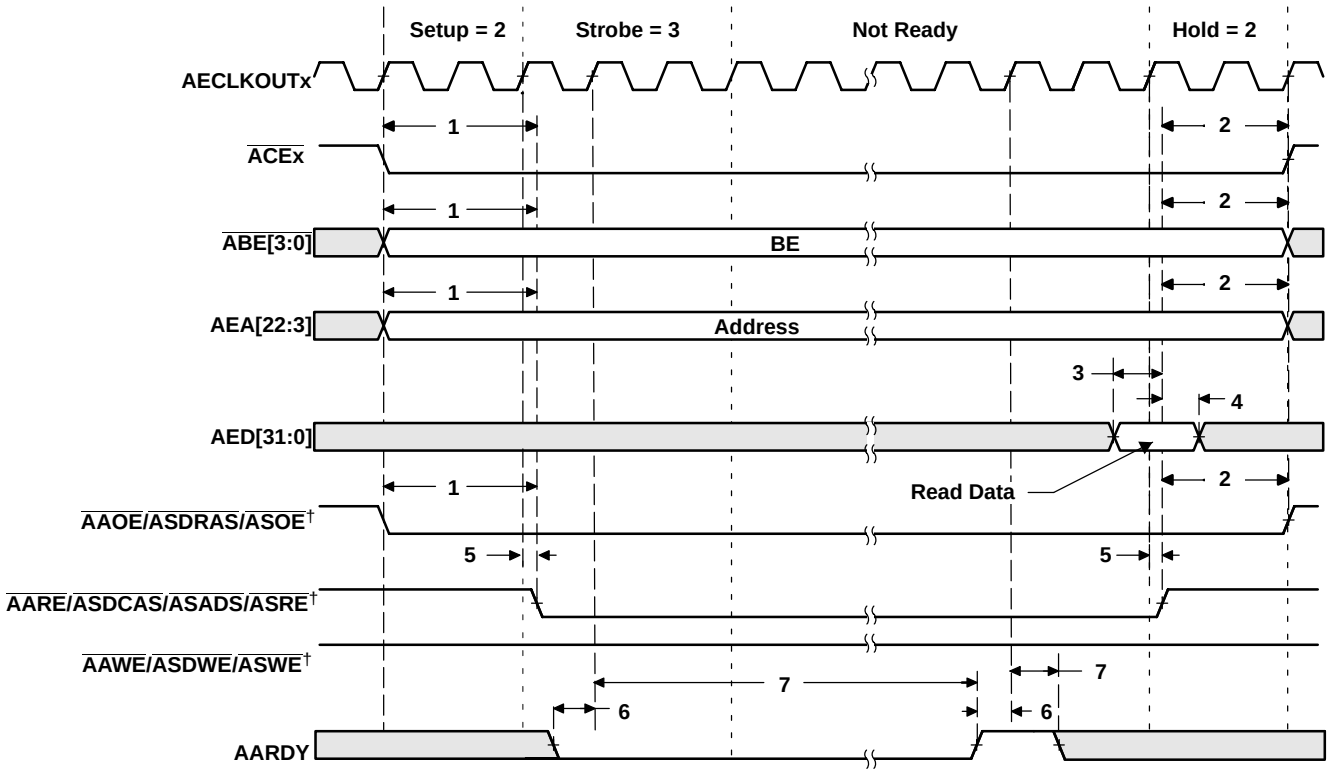

† AAOE/ASDRAS/ASOE, AARE/ASDCAS/ASADS/ASRE, and AAWE/ASDWE/ASWE operate as AAOE (identified under select signals), AARE, and AAWE, respectively, during asynchronous memory accesses.

Figure 4−19. Asynchronous Memory Read Timing for EMIFA

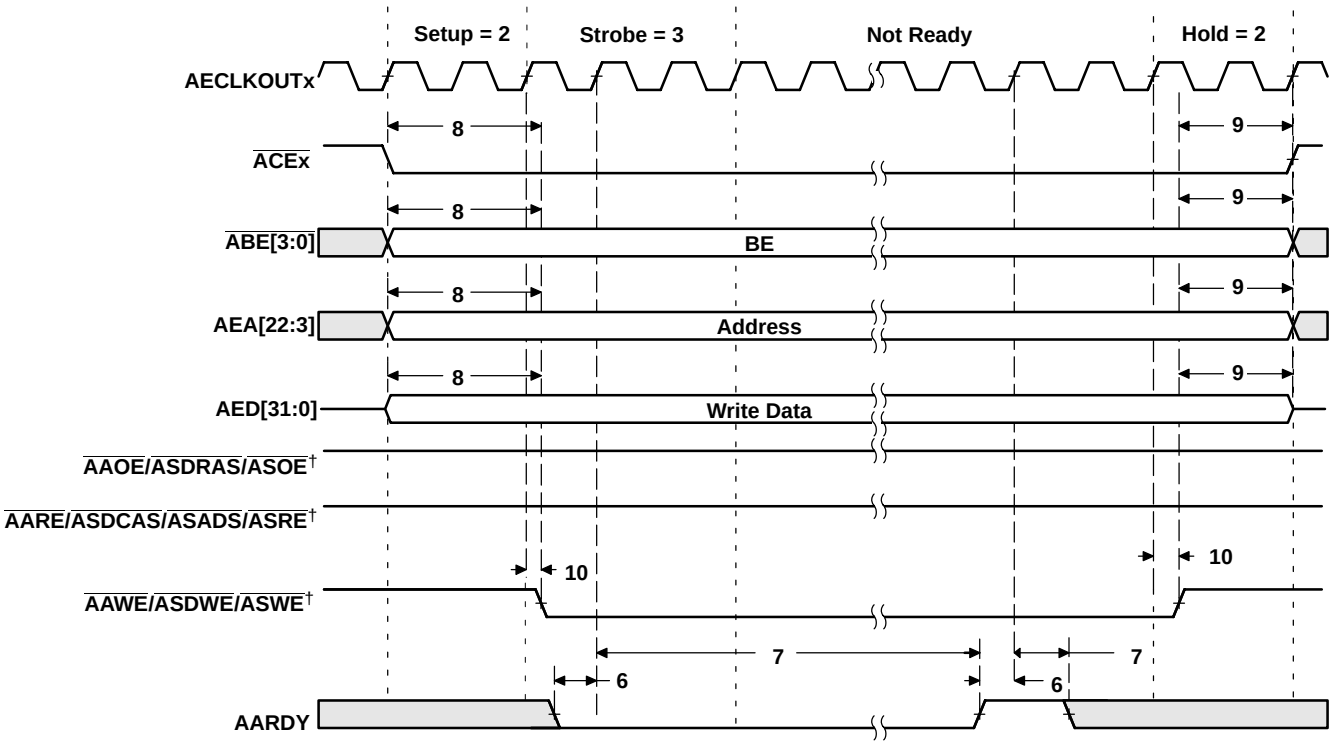

† AAOE/ASDRAS/ASOE, AARE/ASDCAS/ASADS/ASRE, and AAWE/ASDWE/ASWE operate as AAOE (identified under select signals), AARE, and AAWE, respectively, during asynchronous memory accesses.

Figure 4−20. Asynchronous Memory Write Timing for EMIFA

4.8.3.2 Programmable Synchronous Interface Timing

Table 4−24. Timing Requirements for Programmable Synchronous Interface Cycles for EMIFA Module (see Figure 4−21)

NO.			−400 −500		−600		UNIT
			MIN	MAX	MIN	MAX	
6	$t_{su(EDV-EKOxH)}$	Setup time, read AEDx valid before AECLKOUTx high	3.1		2		ns
7	$t_{h(EKOxH-EDV)}$	Hold time, read AEDx valid after AECLKOUTx high	1.8		1.5		ns

Table 4−25. Switching Characteristics Over Recommended Operating Conditions for Programmable Synchronous Interface Cycles for EMIFA Module† (see Figure 4−21−Figure 4−23)

NO.	PARAMETER		−400 −500		−600		UNIT
			MIN	MAX	MIN	MAX	
1	$t_{d(EKOxH-CEV)}$	Delay time, AECLKOUTx high to $\overline{ACEx}$ valid	1.1	6.4	1.1	4.9	ns
2	$t_{d(EKOxH-BEV)}$	Delay time, AECLKOUTx high to $\overline{ABEx}$ valid		6.4		4.9	ns
3	$t_{d(EKOxH-BEIV)}$	Delay time, AECLKOUTx high to $\overline{ABEx}$ invalid	1.1		1.1		ns
4	$t_{d(EKOxH-EAV)}$	Delay time, AECLKOUTx high to AEAx valid		6.4		4.9	ns
5	$t_{d(EKOxH-EAIV)}$	Delay time, AECLKOUTx high to AEAx invalid	1.1		1.1		ns
8	$t_{d(EKOxH-ADSV)}$	Delay time, AECLKOUTx high to $\overline{ASADS}/\overline{ASRE}$ valid	1.1	6.4	1.1	4.9	ns
9	$t_{d(EKOxH-OEV)}$	Delay time, AECLKOUTx high to $\overline{ASOE}$ valid	1.1	6.4	1.1	4.9	ns
10	$t_{d(EKOxH-EDV)}$	Delay time, AECLKOUTx high to AEDx valid		6.4		4.9	ns
11	$t_{d(EKOxH-EDIV)}$	Delay time, AECLKOUTx high to AEDx invalid	1.1		1.1		ns
12	$t_{d(EKOxH-WEV)}$	Delay time, AECLKOUTx high to $\overline{ASWE}$ valid	1.1	6.4	1.1	4.9	ns

† The following parameters are programmable via the EMIF CE Space Secondary Control register (CExSEC):
- Read latency (SYNCRL): 0-, 1-, 2-, or 3-cycle read latency
- Write latency (SYNCWL): 0-, 1-, 2-, or 3-cycle write latency
- $\overline{ACEx}$ assertion length (CEEXT): For standard SBSRAM or ZBT SRAM interface, $\overline{ACEx}$ goes inactive after the final command has been issued (CEEXT = 0). For synchronous FIFO interface with glue, $\overline{ACEx}$ is active when $\overline{ASOE}$ is active (CEEXT = 1).
- Function of $\overline{ASADS}/\overline{ASRE}$ (RENEN): For standard SBSRAM or ZBT SRAM interface, $\overline{ASADS}/\overline{ASRE}$ acts as $\overline{ASADS}$ with deselect cycles (RENEN = 0). For FIFO interface, $\overline{ASADS}/\overline{ASRE}$ acts as $\overline{ASRE}$ with NO deselect cycles (RENEN = 1).
- Synchronization clock (SNCCLK): Synchronized to AECLKOUT1 or AECLKOUT2

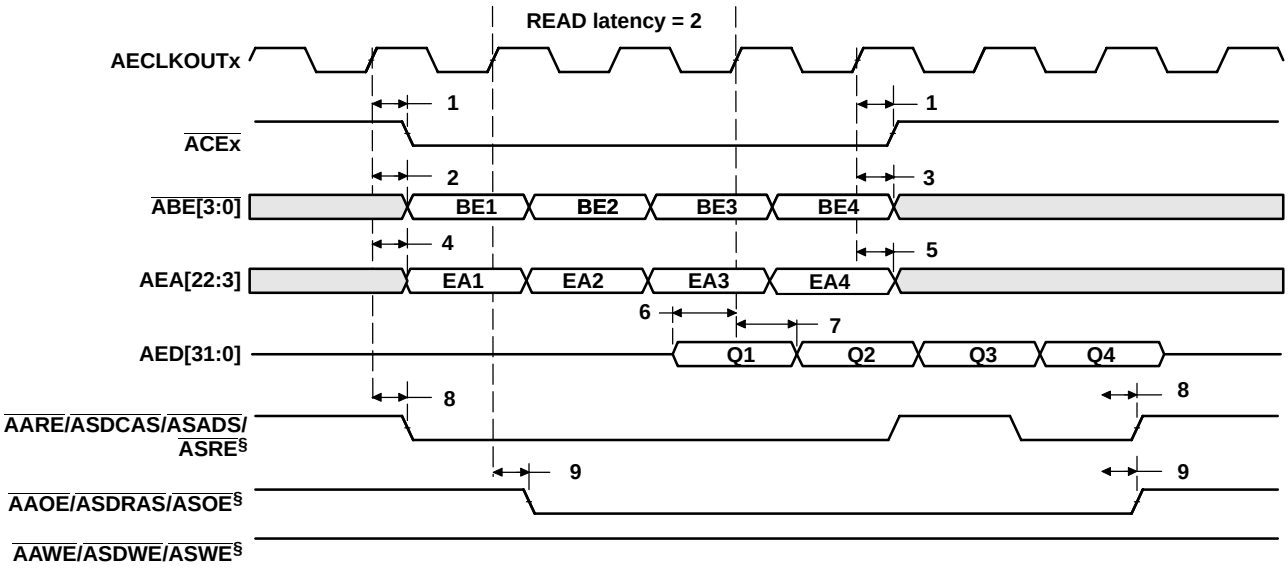

† The read latency and the length of $\overline{\text{ACEx}}$ assertion are programmable via the SYNCRL and CEEXT fields, respectively, in the EMIFA CE Space Secondary Control register (CExSEC). In this figure, SYNCRL = 2 and CEEXT = 0.

‡ The following parameters are programmable via the EMIF CE Space Secondary Control register (CExSEC):

- Read latency (SYNCRL): 0-, 1-, 2-, or 3-cycle read latency
- Write latency (SYNCWL): 0-, 1-, 2-, or 3-cycle write latency
- $\overline{\text{ACEx}}$ assertion length (CEEXT): For standard SBSRAM or ZBT SRAM interface, $\overline{\text{ACEx}}$ goes inactive after the final command has been issued (CEEXT = 0). For synchronous FIFO interface with glue, $\overline{\text{ACEx}}$ is active when $\overline{\text{ASOE}}$ is active (CEEXT = 1).
- Function of $\overline{\text{ASADS}}/\overline{\text{ASRE}}$ (RENEN): For standard SBSRAM or ZBT SRAM interface, $\overline{\text{ASADS}}/\overline{\text{ASRE}}$ acts as $\overline{\text{ASADS}}$ with deselect cycles (RENEN = 0). For FIFO interface, $\overline{\text{ASADS}}/\overline{\text{ASRE}}$ acts as $\overline{\text{ASRE}}$ with NO deselect cycles (RENEN = 1).
- Synchronization clock (SNCCLK): Synchronized to AECLKOUT1 or AECLKOUT2

§ $\overline{\text{AARE}}/\overline{\text{ASDCAS}}/\overline{\text{ASADS}}/\overline{\text{ASRE}}$, $\overline{\text{AAOE}}/\overline{\text{ASDRAS}}/\overline{\text{ASOE}}$, and $\overline{\text{AAWE}}/\overline{\text{ASDWE}}/\overline{\text{ASWE}}$ operate as $\overline{\text{ASADS}}/\overline{\text{ASRE}}$, $\overline{\text{ASOE}}$, and $\overline{\text{ASWE}}$, respectively, during programmable synchronous interface accesses.

Figure 4−21. Programmable Synchronous Interface Read Timing for EMIFA (With Read Latency = 2)†‡

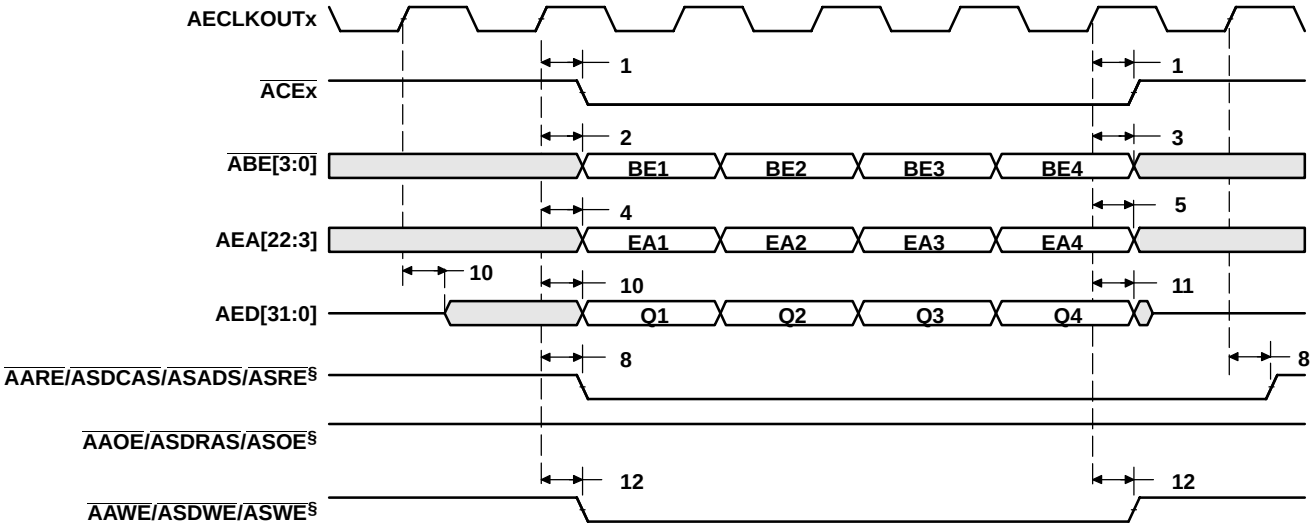

† The write latency and the length of $\overline{\text{ACEx}}$ assertion are programmable via the SYNCWL and CEEXT fields, respectively, in the EMIFA CE Space Secondary Control register (CExSEC). In this figure, SYNCWL = 0 and CEEXT = 0.

‡ The following parameters are programmable via the EMIF CE Space Secondary Control register (CExSEC):

- Read latency (SYNCRL): 0-, 1-, 2-, or 3-cycle read latency
- Write latency (SYNCWL): 0-, 1-, 2-, or 3-cycle write latency
- $\overline{\text{ACEx}}$ assertion length (CEEXT): For standard SBSRAM or ZBT SRAM interface, $\overline{\text{ACEx}}$ goes inactive after the final command has been issued (CEEXT = 0). For synchronous FIFO interface with glue, $\overline{\text{ACEx}}$ is active when $\overline{\text{ASOE}}$ is active (CEEXT = 1).
- Function of $\overline{\text{ASADS}}/\overline{\text{ASRE}}$ (RENEN): For standard SBSRAM or ZBT SRAM interface, $\overline{\text{ASADS}}/\overline{\text{ASRE}}$ acts as $\overline{\text{ASADS}}$ with deselect cycles (RENEN = 0). For FIFO interface, $\overline{\text{ASADS}}/\overline{\text{ASRE}}$ acts as $\overline{\text{ASRE}}$ with NO deselect cycles (RENEN = 1).
- Synchronization clock (SNCCLK): Synchronized to AECLKOUT1 or AECLKOUT2

§ $\overline{\text{AARE}}/\overline{\text{ASDCAS}}/\overline{\text{ASADS}}/\overline{\text{ASRE}}$, $\overline{\text{AAOE}}/\overline{\text{ASDRAS}}/\overline{\text{ASOE}}$, and $\overline{\text{AAWE}}/\overline{\text{ASDWE}}/\overline{\text{ASWE}}$ operate as $\overline{\text{ASADS}}/\overline{\text{ASRE}}$, $\overline{\text{ASOE}}$, and $\overline{\text{ASWE}}$, respectively, during programmable synchronous interface accesses.

Figure 4−22. Programmable Synchronous Interface Write Timing for EMIFA (With Write Latency = 0)†‡§

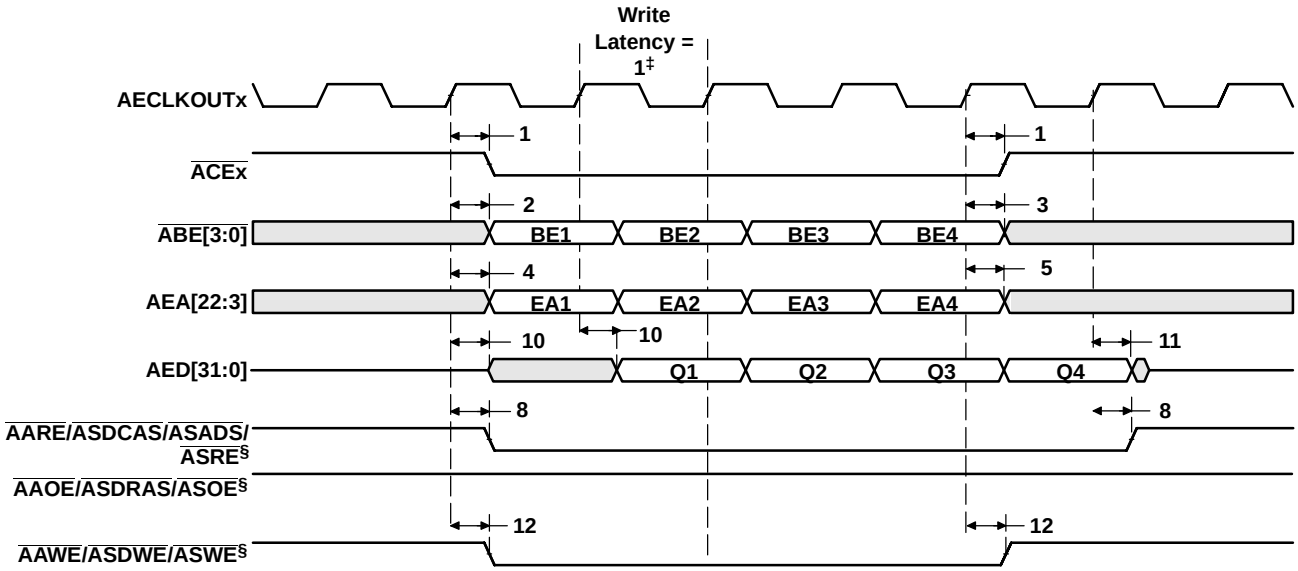

† The write latency and the length of $\overline{\text{ACEx}}$ assertion are programmable via the SYNCWL and CEEXT fields, respectively, in the EMIFA CE Space Secondary Control register (CExSEC). In this figure, SYNCWL = 1 and CEEXT = 0.

‡ The following parameters are programmable via the EMIF CE Space Secondary Control register (CExSEC):

- Read latency (SYNCRL): 0-, 1-, 2-, or 3-cycle read latency
- Write latency (SYNCWL): 0-, 1-, 2-, or 3-cycle write latency
- $\overline{\text{ACEx}}$ assertion length (CEEXT): For standard SBSRAM or ZBT SRAM interface, $\overline{\text{ACEx}}$ goes inactive after the final command has been issued (CEEXT = 0). For synchronous FIFO interface with glue, $\overline{\text{ACEx}}$ is active when $\overline{\text{ASOE}}$ is active (CEEXT = 1).
- Function of $\overline{\text{ASADS}}/\overline{\text{ASRE}}$ (RENEN): For standard SBSRAM or ZBT SRAM interface, $\overline{\text{ASADS}}/\overline{\text{ASRE}}$ acts as $\overline{\text{ASADS}}$ with deselect cycles (RENEN = 0). For FIFO interface, $\overline{\text{ASADS}}/\overline{\text{ASRE}}$ acts as $\overline{\text{ASRE}}$ with NO deselect cycles (RENEN = 1).
- Synchronization clock (SNCCLK): Synchronized to ECLKOUT1 or ECLKOUT2

§ $\overline{\text{AARE}}/\overline{\text{ASDCAS}}/\overline{\text{ASADS}}/\overline{\text{ASRE}}$, $\overline{\text{AAOE}}/\overline{\text{ASDRAS}}/\overline{\text{ASOE}}$, and $\overline{\text{AAWE}}/\overline{\text{ASDWE}}/\overline{\text{ASWE}}$ operate as $\overline{\text{ASADS}}/\overline{\text{ASRE}}$, $\overline{\text{ASOE}}$, and $\overline{\text{ASWE}}$, respectively, during programmable synchronous interface accesses.

Figure 4−23. Programmable Synchronous Interface Write Timing for EMIFA (With Write Latency = 1)†‡

4.8.3.3 Synchronous DRAM Timing

Table 4−26. Timing Requirements for Synchronous DRAM Cycles for EMIFA Module (see Figure 4−24)

NO.			−400 −500		−600		UNIT
			MIN	MAX	MIN	MAX	
6	$t_{su(EDV-EKO1H)}$	Setup time, read AEDx valid before AECLKOUTx high	2.1		0.6		ns
7	$t_{h(EKO1H-EDV)}$	Hold time, read AEDx valid after AECLKOUTx high	2.8		2.1		ns

Table 4−27. Switching Characteristics Over Recommended Operating Conditions for Synchronous DRAM Cycles for EMIFA Module (see Figure 4−24−Figure 4−31)

NO.	PARAMETER		−400 −500		−600		UNIT
			MIN	MAX	MIN	MAX	
1	$t_{d(EKO1H-CEV)}$	Delay time, AECLKOUTx high to $\overline{ACEx}$ valid	1.3	6.4	1.3	4.9	ns
2	$t_{d(EKO1H-BEV)}$	Delay time, AECLKOUTx high to $\overline{ABEx}$ valid		6.4		4.9	ns
3	$t_{d(EKO1H-BEIV)}$	Delay time, AECLKOUTx high to $\overline{ABEx}$ invalid	1.3		1.3		ns
4	$t_{d(EKO1H-EAV)}$	Delay time, AECLKOUTx high to AEAx valid		6.4		4.9	ns
5	$t_{d(EKO1H-EAIV)}$	Delay time, AECLKOUTx high to AEAx invalid	1.3		1.3		ns
8	$t_{d(EKO1H-CASV)}$	Delay time, AECLKOUTx high to $\overline{ASDCAS}$ valid	1.3	6.4	1.3	4.9	ns
9	$t_{d(EKO1H-EDV)}$	Delay time, AECLKOUTx high to AEDx valid		6.4		4.9	ns
10	$t_{d(EKO1H-EDIV)}$	Delay time, AECLKOUTx high to AEDx invalid	1.3		1.3		ns
11	$t_{d(EKO1H-WEV)}$	Delay time, AECLKOUTx high to $\overline{ASDWE}$ valid	1.3	6.4	1.3	4.9	ns
12	$t_{d(EKO1H-RAS)}$	Delay time, AECLKOUTx high to $\overline{ASDRAS}$ valid	1.3	6.4	1.3	4.9	ns
13	$t_{d(EKO1H-ACKEV)}$	Delay time, AECLKOUTx high to ASDCKE valid	1.3	6.4	1.3	4.9	ns
14	$t_{d(EKO1H-PDTV)}$	Delay time, AECLKOUTx high to $\overline{APDT}$ valid	1.3	6.4	1.3	4.9	ns

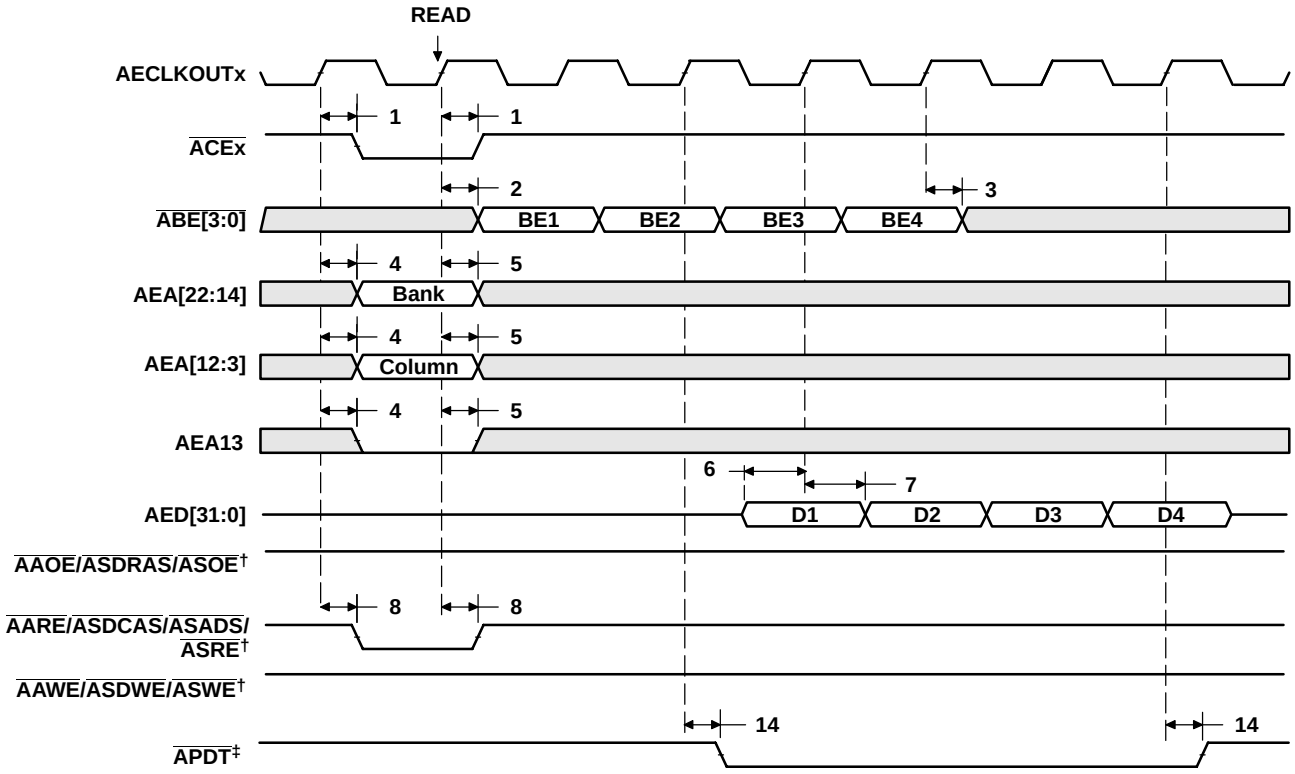

† AARE/ASDCAS/ASADS/ASRE, AAWE/ASDWE/ASWE, and AAOE/ASDRAS/ASOE operate as ASDCAS, ASDWE, and ASDRAS, respectively, during SDRAM accesses.

‡ APDT signal is only asserted when the EDMA is in PDT mode (set the PDTS bit to 1 in the EDMA options parameter RAM). For APDT read, data is not latched into EMIF. The PDTRL field in the PDT control register (PDTCTL) configures the latency of the APDT signal with respect to the data phase of a read transaction. The latency of the APDT signal for a read can be programmed to 0, 1, 2, or 3 by setting PDTRL to 00, 01, 10, or 11, respectively. PDTRL equals 00 (zero latency) in Figure 4−24.

Figure 4−24. SDRAM Read Command (CAS Latency 3) for EMIFA

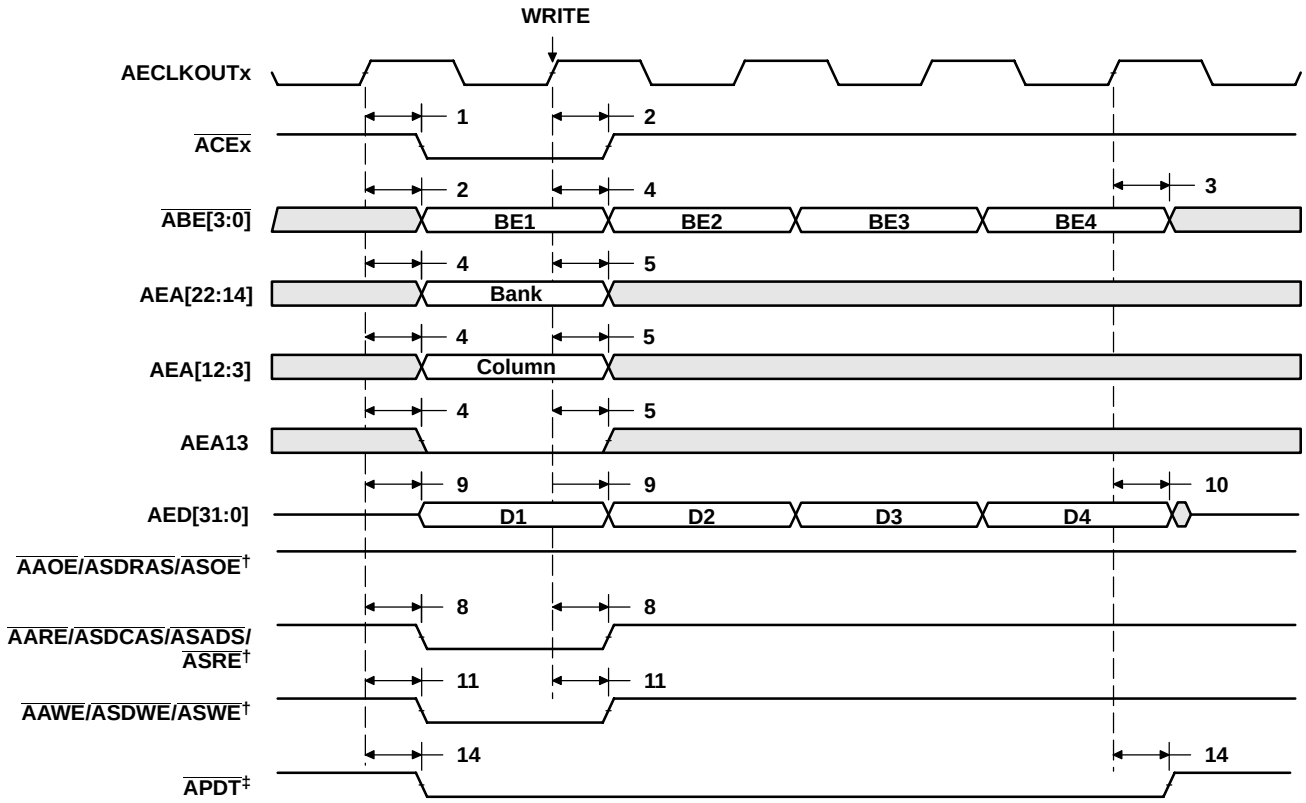

† AARE/ASDCAS/ASADS/ASRE, AAWE/ASDWE/ASWE, and AAOE/ASDRAS/ASOE operate as ASDCAS, ASDWE, and ASDRAS, respectively, during SDRAM accesses.

‡ APDT signal is only asserted when the EDMA is in PDT mode (set the PDTD bit to 1 in the EDMA options parameter RAM). For APDT write, data is not driven (in High-Z). The PDTWL field in the PDT control register (PDTCTL) configures the latency of the APDT signal with respect to the data phase of a write transaction. The latency of the APDT signal for a write transaction can be programmed to 0, 1, 2, or 3 by setting PDTWL to 00, 01, 10, or 11, respectively. PDTWL equals 00 (zero latency) in Figure 4−25.

Figure 4−25. SDRAM Write Command for EMIFA

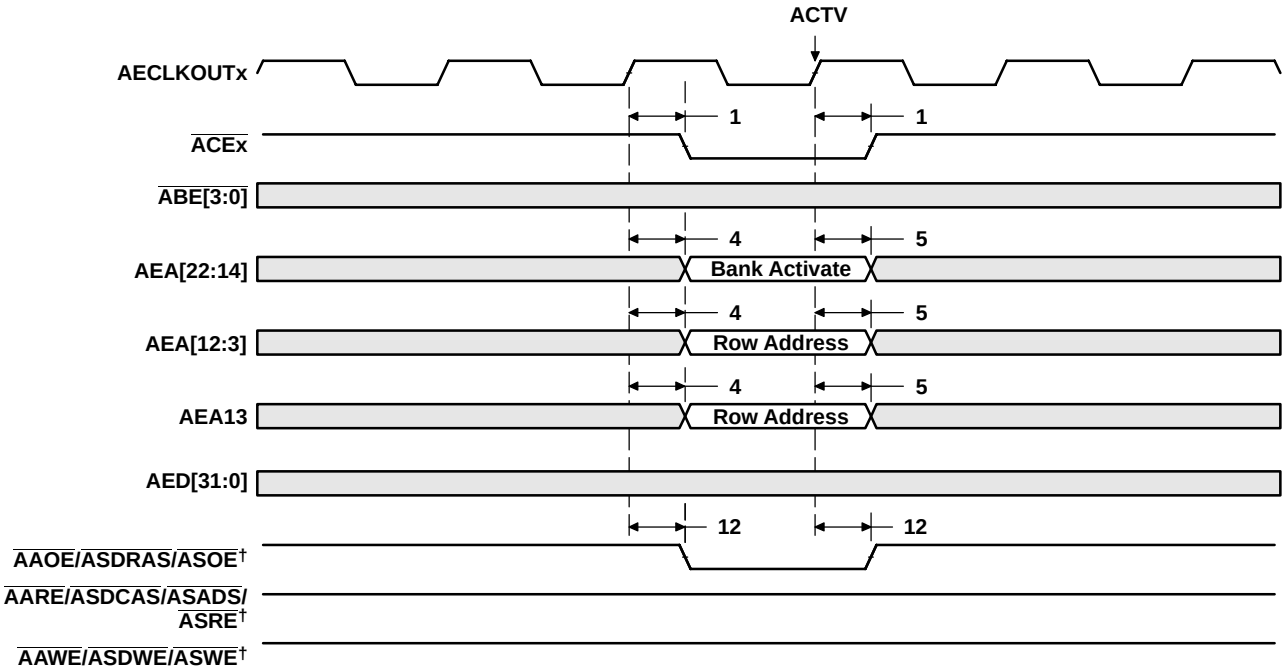

† AARE/ASDCAS/ASADS/ASRE, AAWE/ASDWE/ASWE, and AAOE/ASDRAS/ASOE operate as ASDCAS, ASDWE, and ASDRAS, respectively, during SDRAM accesses.

Figure 4−26. SDRAM ACTV Command for EMIFA

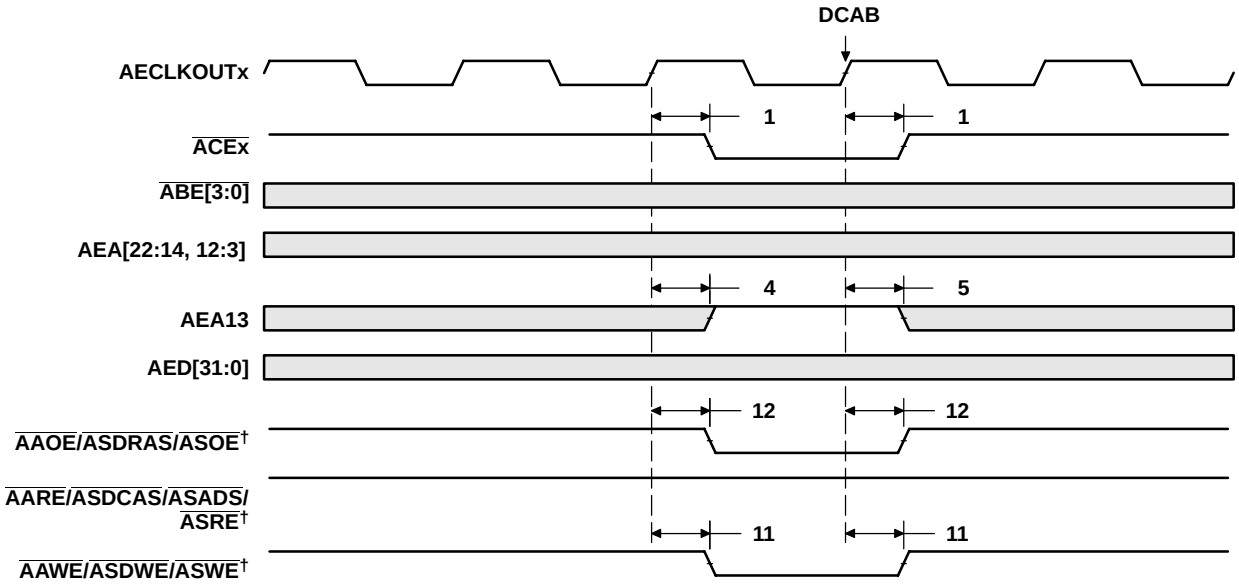

† AARE/ASDCAS/ASADS/ASRE, AAWE/ASDWE/ASWE, and AAOE/ASDRAS/ASOE operate as ASDCAS, ASDWE, and ASDRAS, respectively, during SDRAM accesses.

Figure 4−27. SDRAM DCAB Command for EMIFA

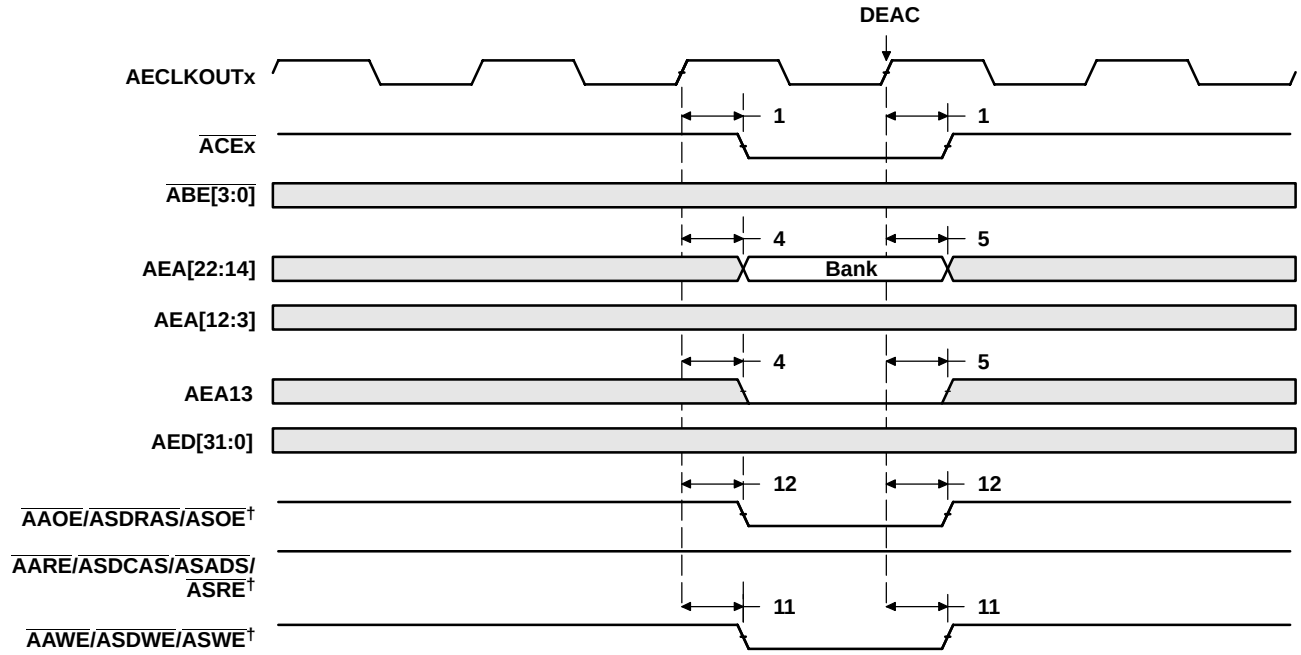

† AARE/ASDCAS/ASADS/ASRE, AAWE/ASDWE/ASWE, and AAOE/ASDRAS/ASOE operate as ASDCAS, ASDWE, and ASDRAS, respectively, during SDRAM accesses.

Figure 4−28. SDRAM DEAC Command for EMIFA

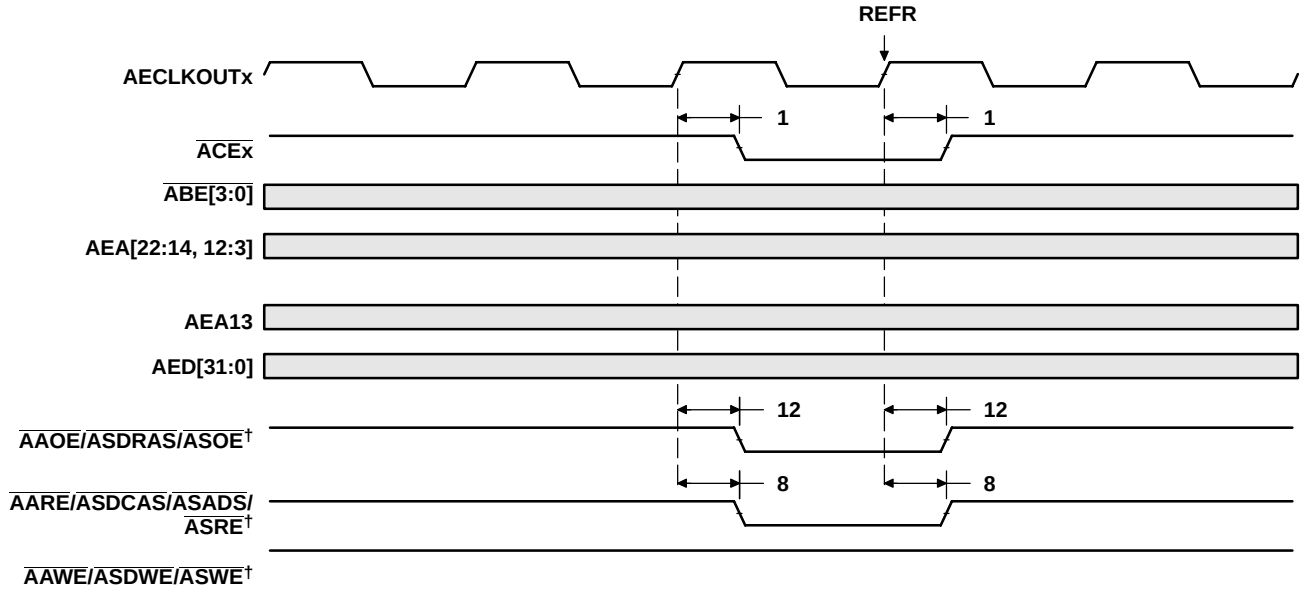

† AARE/ASDCAS/ASADS/ASRE, AAWE/ASDWE/ASWE, and AAOE/ASDRAS/ASOE operate as ASDCAS, ASDWE, and ASDRAS, respectively, during SDRAM accesses.

Figure 4−29. SDRAM REFR Command for EMIFA

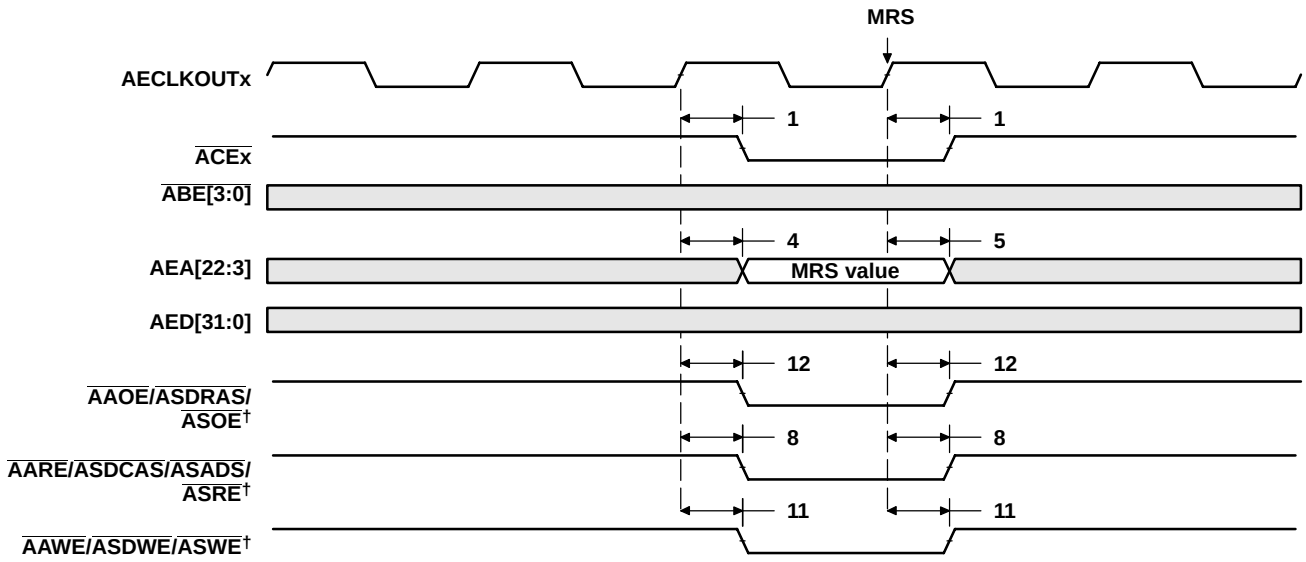

† AARE/ASDCAS/ASADS/ASRE, AAWE/ASDWE/ASWE, and AAOE/ASDRAS/ASOE operate as ASDCAS, ASDWE, and ASDRAS, respectively, during SDRAM accesses.

Figure 4−30. SDRAM MRS Command for EMIFA

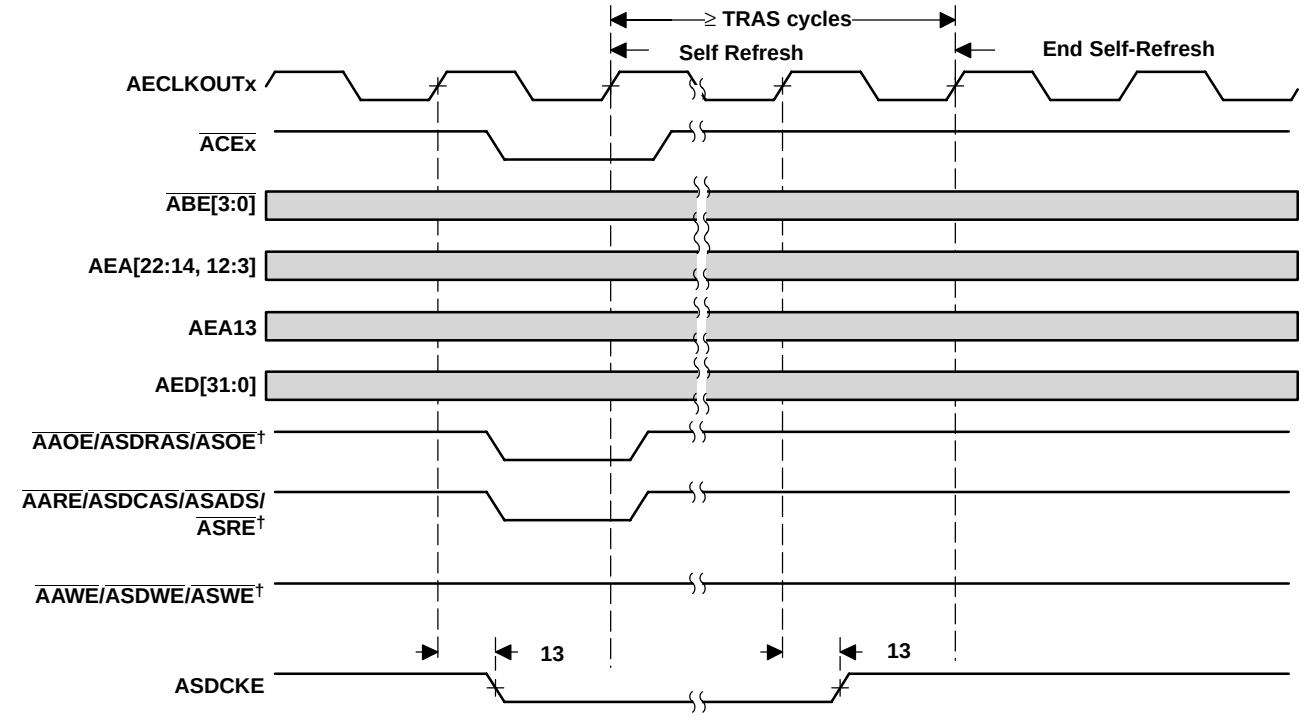

† AARE/ASDCAS/ASADS/ASRE, AAWE/ASDWE/ASWE, and AAOE/ASDRAS/ASOE operate as ASDCAS, ASDWE, and ASDRAS, respectively, during SDRAM accesses.

Figure 4−31. SDRAM Self-Refresh Timing for EMIFA

4.8.3.4 $\overline{\text{HOLD}}$/$\overline{\text{HOLDA}}$ Timing

Table 4−28. Timing Requirements for the $\overline{\text{HOLD}}$/$\overline{\text{HOLDA}}$ Cycles for EMIFA Module† (see Figure 4−32)

NO.			−400 −500 −600		UNIT
			MIN	MAX	
3	$t_{h(HOLDAL-HOLDL)}$	Hold time, $\overline{\text{HOLD}}$ low after $\overline{\text{HOLDA}}$ low	E		ns

† E = the EMIF input clock (ECLKIN, CPU/4 clock, or CPU/6 clock) period in ns for EMIFA.

Table 4−29. Switching Characteristics Over Recommended Operating Conditions for the $\overline{\text{HOLD}}$/$\overline{\text{HOLDA}}$ Cycles for EMIFA Module†‡§ (see Figure 4−32)

NO.	PARAMETER		−400 −500 −600		UNIT
			MIN	MAX	
1	$t_{d(HOLDL-EMHZ)}$	Delay time, $\overline{\text{HOLD}}$ low to EMIFA Bus high impedance	2E	¶	ns
2	$t_{d(EMHZ-HOLDAL)}$	Delay time, EMIF Bus high impedance to $\overline{\text{HOLDA}}$ low	0	2E	ns
4	$t_{d(HOLDH-EMLZ)}$	Delay time, $\overline{\text{HOLD}}$ high to EMIF Bus low impedance	2E	7E	ns
5	$t_{d(EMLZ-HOLDAH)}$	Delay time, EMIFA Bus low impedance to $\overline{\text{HOLDA}}$ high	0	2E	ns
6	$t_{d(HOLDL-EKOHZ)}$	Delay time, $\overline{\text{HOLD}}$ low to AECLKOUTx high impedance	2E	¶	ns
7	$t_{d(HOLDH-EKOLZ)}$	Delay time, $\overline{\text{HOLD}}$ high to AECLKOUTx low impedance	2E	7E	ns

† E = the EMIF input clock (ECLKIN, CPU/4 clock, or CPU/6 clock) period in ns for EMIFA.
‡ EMIFA Bus consists of: $\overline{\text{ACE}}$[3:0], $\overline{\text{ABE}}$[3:0], AED[31:0], AEA[22:3], $\overline{\text{AARE}}$/$\overline{\text{ASDCAS}}$/$\overline{\text{ASADS}}$/$\overline{\text{ASRE}}$, $\overline{\text{AAOE}}$/$\overline{\text{ASDRAS}}$/$\overline{\text{ASOE}}$, and $\overline{\text{AAWE}}$/$\overline{\text{ASDWE}}$/$\overline{\text{ASWE}}$ **,** ASDCKE, $\overline{\text{ASOE3}}$, and $\overline{\text{APDT}}$.
§ The EKxHZ bits in the EMIF Global Control register (GBLCTL) determine the state of the ECLKOUTx signals during $\overline{\text{HOLDA}}$. If EKxHZ = 0, ECLKOUTx continues clocking during Hold mode. If EKxHZ = 1, ECLKOUTx goes to high impedance during Hold mode, as shown in Figure 4−32.
¶ All pending EMIF transactions are allowed to complete before $\overline{\text{HOLDA}}$ is asserted. If no bus transactions are occurring, then the minimum delay time can be achieved. Also, bus hold can be indefinitely delayed by setting NOHOLD = 1.

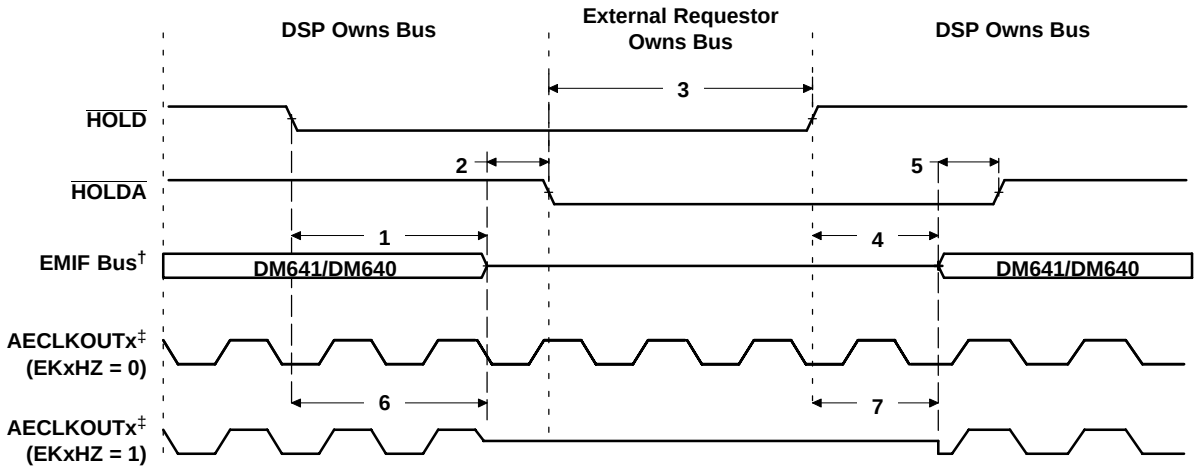

† EMIFA Bus consists of: $\overline{\text{ACE}}$[3:0], $\overline{\text{ABE}}$[3:0], AED[31:0], AEA[22:3], $\overline{\text{AARE}}$/$\overline{\text{ASDCAS}}$/$\overline{\text{ASADS}}$/$\overline{\text{ASRE}}$, $\overline{\text{AAOE}}$/$\overline{\text{ASDRAS}}$/$\overline{\text{ASOE}}$, and $\overline{\text{AAWE}}$/$\overline{\text{ASDWE}}$/$\overline{\text{ASWE}}$, ASDCKE, $\overline{\text{ASOE3}}$, and $\overline{\text{APDT}}$.
‡ The EKxHZ bits in the EMIF Global Control register (GBLCTL) determine the state of the ECLKOUTx signals during $\overline{\text{HOLDA}}$. If EKxHZ = 0, ECLKOUTx continues clocking during Hold mode. If EKxHZ = 1, ECLKOUTx goes to high impedance during Hold mode, as shown in Figure 4−32.

Figure 4−32. $\overline{\text{HOLD}}$/$\overline{\text{HOLDA}}$ Timing for EMIFA

4.8.3.5 BUSREQ Timing

Table 4−30. Switching Characteristics Over Recommended Operating Conditions for the BUSREQ Cycles for EMIFA Module (see Figure 4−33)

NO.	PARAMETER		−400 −500		−600		UNIT
			MIN	MAX	MIN	MAX	
1	$t_{d(AEKO1H-ABUSRV)}$	Delay time, AECLKOUTx high to ABUSREQ valid	0.6	7.1	1	5.5	ns

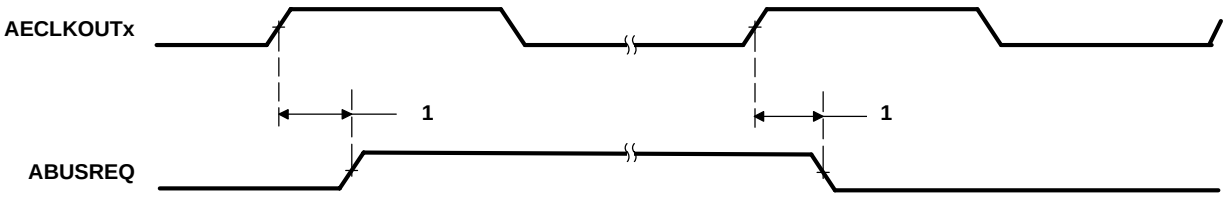

Figure 4−33. BUSREQ Timing for EMIFA

4.9 Multichannel Audio Serial Port (McASP0) Peripheral

The McASP functions as a general-purpose audio serial port optimized for the needs of multichannel audio applications. The McASP is useful for time-division multiplexed (TDM) stream, Inter-Integrated Sound (I2S) protocols, and intercomponent digital audio interface transmission (DIT).

4.9.1 McASP0 Device-Specific Information

The TMS320DM641/DM640 device includes one multichannel audio serial port (McASP) interface peripheral (McASP0). The McASP is a serial port optimized for the needs of multichannel audio applications.

The McASP consists of a transmit and receive section. These sections can operate completely independently with different data formats, separate master clocks, bit clocks, and frame syncs or alternatively, the transmit and receive sections may be synchronized. The McASP module also includes a pool of 16 shift registers that may be configured to operate as either transmit data, receive data, or general-purpose I/O (GPIO).

The transmit section of the McASP can transmit data in either a time-division-multiplexed (TDM) synchronous serial format or in a digital audio interface (DIT) format where the bit stream is encoded for S/PDIF, AES-3, IEC-60958, CP-430 transmission. The receive section of the McASP supports the TDM synchronous serial format.

The McASP can support one transmit data format (either a TDM format or DIT format) and one receive format at a time. All transmit shift registers use the same format and all receive shift registers use the same format. However, the transmit and receive formats need not be the same.

Both the transmit and receive sections of the McASP also support burst mode which is useful for non-audio data (for example, passing control information between two DSPs).

The McASP peripheral has additional capability for flexible clock generation, and error detection/handling, as well as error management.

For more detailed information on and the functionality of the McASP peripheral, see the *TMS320C6000 DSP Multichannel Audio Serial Port (McASP) Reference Guide* (literature number SPRU041).

4.9.1.1 McASP Block Diagram

Figure 4−34 illustrates the major blocks along with external signals of the TMS320DM641/DM640 McASP0 peripheral; and shows the 8 serial data [AXR] pins. The McASP also includes full general-purpose I/O (GPIO) control, so any pins not needed for serial transfers can be used for general-purpose I/O.

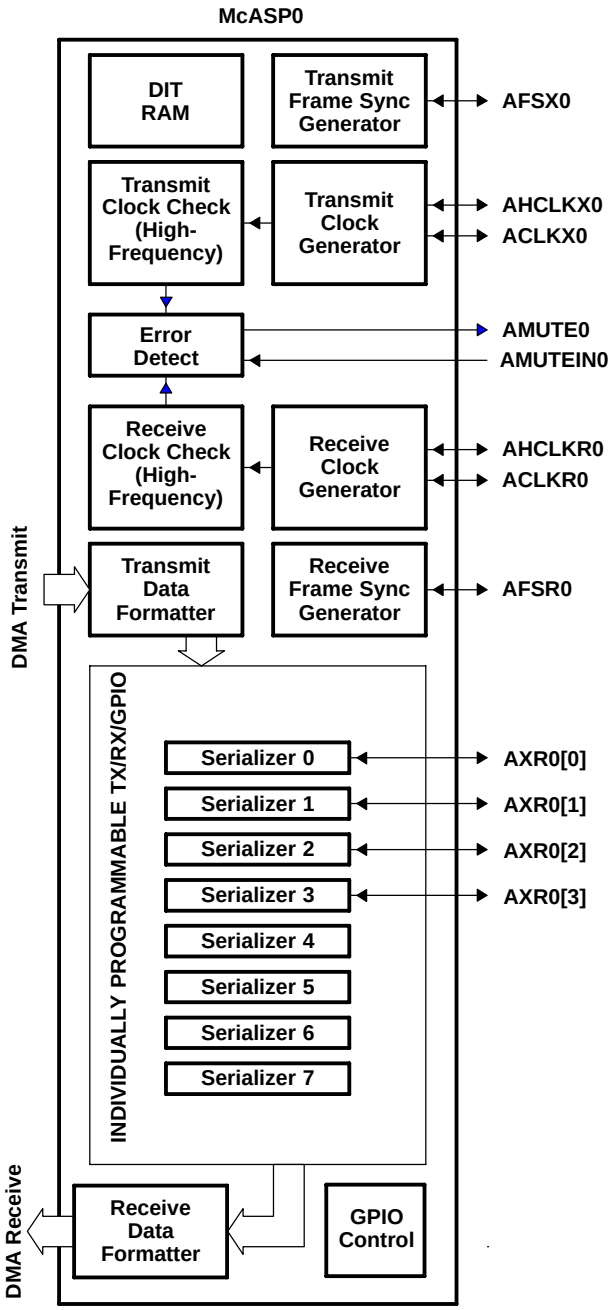

Figure 4−34. McASP0 Configuration

4.9.2 McASP0 Peripheral Register Description(s)

Table 4−31. McASP0 Control Registers

HEX ADDRESS RANGE	ACRONYM	REGISTER NAME
01B4 C000	PID	Peripheral Identification register [Register value: 0x0010 0101]
01B4 C004	PWRDEMU	Power down and emulation management register
01B4 C008	−	Reserved
01B4 C00C	−	Reserved
01B4 C010	PFUNC	Pin function register
01B4 C014	PDIR	Pin direction register
01B4 C018	PDOUT	Pin data out register
01B4 C01C	PDIN/PDSET	Pin data in / data set register Read returns: PDIN Writes affect: PDSET
01B4 C020	PDCLR	Pin data clear register
01B4 C024 − 01B4 C040	−	Reserved
01B4 C044	GBLCTL	Global control register
01B4 C048	AMUTE	Mute control register
01B4 C04C	DLBCTL	Digital Loop-back control register
01B4 C050	DITCTL	DIT mode control register
01B4 C054 − 01B4 C05C	−	Reserved
01B4 C060	RGBLCTL	Alias of GBLCTL containing only Receiver Reset bits, allows transmit to be reset independently from receive.
01B4 C064	RMASK	Receiver format unit bit mask register
01B4 C068	RFMT	Receive bit stream format register
01B4 C06C	AFSRCTL	Receive frame sync control register
01B4 C070	ACLKRCTL	Receive clock control register
01B4 C074	AHCLKRCTL	High-frequency receive clock control register
01B4 C078	RTDM	Receive TDM slot 0−31 register
01B4 C07C	RINTCTL	Receiver interrupt control register
01B4 C080	RSTAT	Status register − Receiver
01B4 C084	RSLOT	Current receive TDM slot register
01B4 C088	RCLKCHK	Receiver clock check control register
01B4 C08C − 01B4 C09C	−	Reserved
01B4 C0A0	XGBLCTL	Alias of GBLCTL containing only Transmitter Reset bits, allows transmit to be reset independently from receive.
01B4 C0A4	XMASK	Transmit format unit bit mask register
01B4 C0A8	XFMT	Transmit bit stream format register
01B4 C0AC	AFSXCTL	Transmit frame sync control register
01B4 C0B0	ACLKXCTL	Transmit clock control register
01B4 C0B4	AHCLKXCTL	High-frequency Transmit clock control register
01B4 C0B8	XTDM	Transmit TDM slot 0−31 register
01B4 C0BC	XINTCTL	Transmit interrupt control register
01B4 C0C0	XSTAT	Status register − Transmitter
01B4 C0C4	XSLOT	Current transmit TDM slot
01B4 C0C8	XCLKCHK	Transmit clock check control register

Table 4−31. McASP0 Control Registers (Continued)

HEX ADDRESS RANGE	ACRONYM	REGISTER NAME
01B4 C0CC	XEVTCTL	Transmitter DMA control register
01B4 C0D0 − 01B4 C0FC	−	Reserved
01B4 C100	DITCSRA0	Left (even TDM slot) channel status register file
01B4 C104	DITCSRA1	Left (even TDM slot) channel status register file
01B4 C108	DITCSRA2	Left (even TDM slot) channel status register file
01B4 C10C	DITCSRA3	Left (even TDM slot) channel status register file
01B4 C110	DITCSRA4	Left (even TDM slot) channel status register file
01B4 C114	DITCSRA5	Left (even TDM slot) channel status register file
01B4 C118	DITCSRB0	Right (odd TDM slot) channel status register file
01B4 C11C	DITCSRB1	Right (odd TDM slot) channel status register file
01B4 C120	DITCSRB2	Right (odd TDM slot) channel status register file
01B4 C124	DITCSRB3	Right (odd TDM slot) channel status register file
01B4 C128	DITCSRB4	Right (odd TDM slot) channel status register file
01B4 C12C	DITCSRB5	Right (odd TDM slot) channel status register file
01B4 C130	DITUDRA0	Left (even TDM slot) user data register file
01B4 C134	DITUDRA1	Left (even TDM slot) user data register file
01B4 C138	DITUDRA2	Left (even TDM slot) user data register file
01B4 C13C	DITUDRA3	Left (even TDM slot) user data register file
01B4 C140	DITUDRA4	Left (even TDM slot) user data register file
01B4 C144	DITUDRA5	Left (even TDM slot) user data register file
01B4 C148	DITUDRB0	Right (odd TDM slot) user data register file
01B4 C14C	DITUDRB1	Right (odd TDM slot) user data register file
01B4 C150	DITUDRB2	Right (odd TDM slot) user data register file
01B4 C154	DITUDRB3	Right (odd TDM slot) user data register file
01B4 C158	DITUDRB4	Right (odd TDM slot) user data register file
01B4 C15C	DITUDRB5	Right (odd TDM slot) user data register file
01B4 C160 − 01B4 C17C	−	Reserved
01B4 C180	SRCTL0	Serializer 0 control register
01B4 C184	SRCTL1	Serializer 1 control register
01B4 C188	SRCTL2	Serializer 2 control register
01B4 C18C	SRCTL3	Serializer 3 control register
01B4 C190 − 01B4 C1FC	−	Reserved
01B4 C200	XBUF0	Transmit Buffer for Serializer 0
01B4 C204	XBUF1	Transmit Buffer for Serializer 1
01B4 C208	XBUF2	Transmit Buffer for Serializer 2
01B4 C20C	XBUF3	Transmit Buffer for Serializer 3
01B4 C210 − 01B4 C27C	−	Reserved
01B4 C280	RBUF0	Receive Buffer for Serializer 0
01B4 C284	RBUF1	Receive Buffer for Serializer 1
01B4 C288	RBUF2	Receive Buffer for Serializer 2
01B4 C28C	RBUF3	Receive Buffer for Serializer 3
01B4 C290 − 01B4 FFFF	−	Reserved

Table 4−32. McASP0 Data Registers

HEX ADDRESS RANGE	ACRONYM	REGISTER NAME	COMMENTS
3C00 0000 − 3C0F FFFF	RBUF/XBUFx	McASPx receive buffers or McASPx transmit buffers via the Peripheral Data Bus.	(Used when RSEL or XSEL bits = 0 [these bits are located in the RFMT or XFMT registers, respectively].)

4.9.3 McASP0 Electrical Data/Timing

4.9.3.1 Multichannel Audio Serial Port (McASP) Timing

Table 4−33. Timing Requirements for McASP (see Figure 4−35 and Figure 4−36)

NO.				−400 −500 −600		UNIT
				MIN	MAX	
1	$t_{c(AHCKRX)}$	Cycle time, AHCLKR/X		20		ns
2	$t_{w(AHCKRX)}$	Pulse duration, AHCLKR/X high or low		10		ns
3	$t_{c(CKRX)}$	Cycle time, ACLKR/X	ACLKR/X ext	33		ns
4	$t_{w(CKRX)}$	Pulse duration, ACLKR/X high or low	ACLKR/X ext	16.5		ns
5	$t_{su(FRXC-KRX)}$	Setup time, AFSR/X input valid before ACLKR/X latches data	ACLKR/X int	5		ns
			ACLKR/X ext	5		ns
6	$t_{h(CKRX-FRX)}$	Hold time, AFSR/X input valid after ACLKR/X latches data	ACLKR/X int	5		ns
			ACLKR/X ext	5		ns
7	$t_{su(AXR-CKRX)}$	Setup time, AXR input valid before ACLKR/X latches data	ACLKR/X int	5		ns
			ACLKR/X ext	5		ns
8	$t_{h(CKRX-AXR)}$	Hold time, AXR input valid after ACLKR/X latches data	ACLKR/X int	5		ns
			ACLKR/X ext	5		ns

Table 4−34. Switching Characteristics Over Recommended Operating Conditions for McASP (see Figure 4−35 and Figure 4−36)

NO.	PARAMETER			−400 −500 −600		UNIT
				MIN	MAX	
9	$t_{c(AHCKRX)}$	Cycle time, AHCLKR/X		20		ns
10	$t_{w(AHCKRX)}$	Pulse duration, AHCLKR/X high or low		10		ns
11	$t_{c(CKRX)}$	Cycle time, ACLKR/X	ACLKR/X int	33		ns
12	$t_{w(CKRX)}$	Pulse duration, ACLKR/X high or low	ACLKR/X int	16.5		ns
13	$t_{d(CKRX-FRX)}$	Delay time, ACLKR/X transmit edge to AFSX/R output valid	ACLKR/X int	−1	5	ns
			ACLKR/X ext	0	10	ns
14	$t_{d(CKX-AXRV)}$	Delay time, ACLKX transmit edge to AXR output valid	ACLKX int	−1	5	ns
			ACLKX ext	0	10	ns
15	$t_{dis(CKRX−AXRHZ)}$	Disable time, AXR high impedance following last data bit from ACLKR/X transmit edge	ACLKR/X int	0	10	ns
			ACLKR/X ext	0	10	ns

MULTICHANNEL AUDIO SERIAL PORT (McASP) TIMING (CONTINUED)

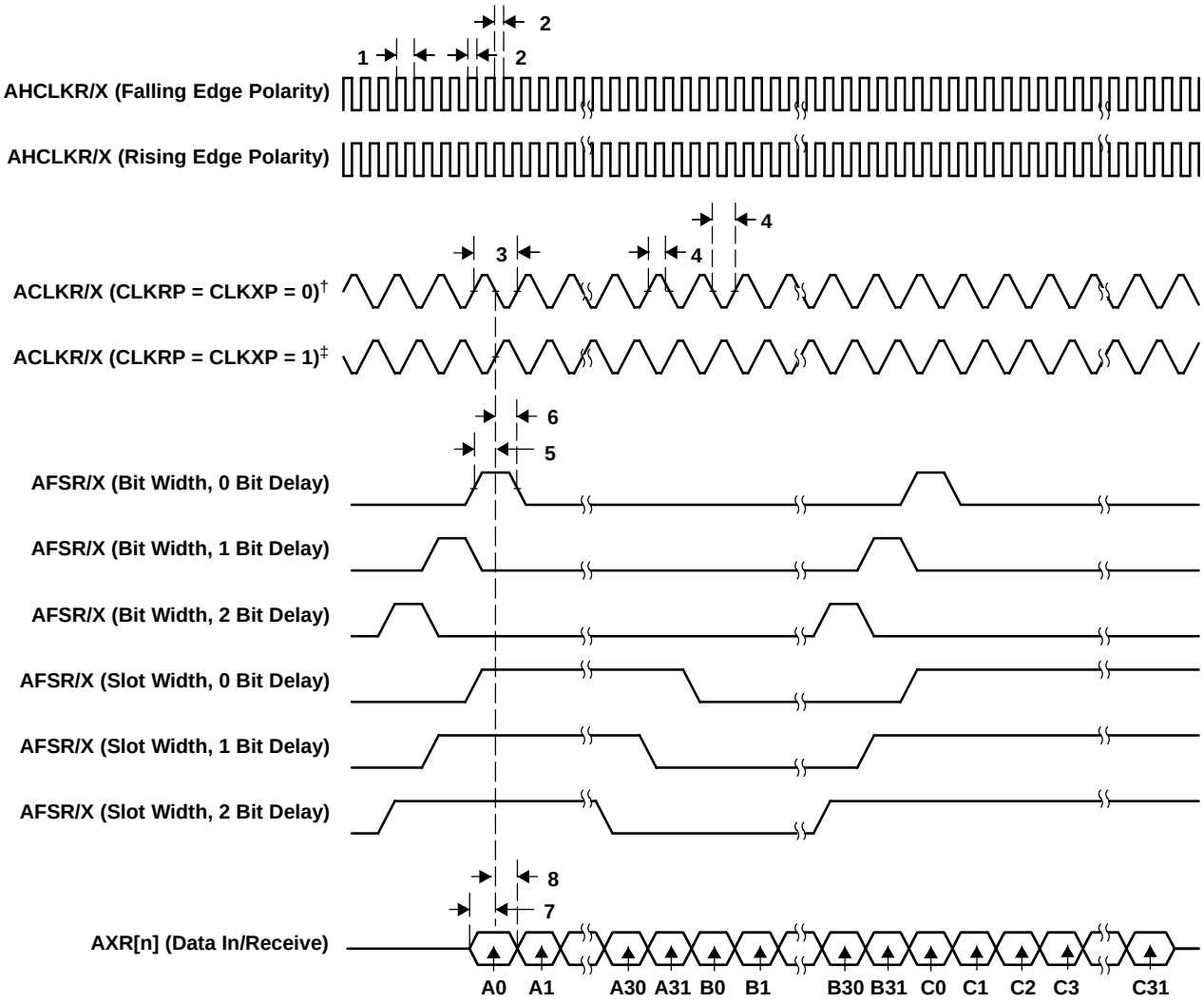

† For CLKRP = CLKXP = 0, the McASP transmitter is configured for rising edge (to shift data out) and the McASP receiver is configured for falling edge (to shift data in).
‡ For CLKRP = CLKXP = 1, the McASP transmitter is configured for falling edge (to shift data out) and the McASP receiver is configured for rising edge (to shift data in).

Figure 4−35. McASP Input Timings

MULTICHANNEL AUDIO SERIAL PORT (McASP) TIMING (CONTINUED)

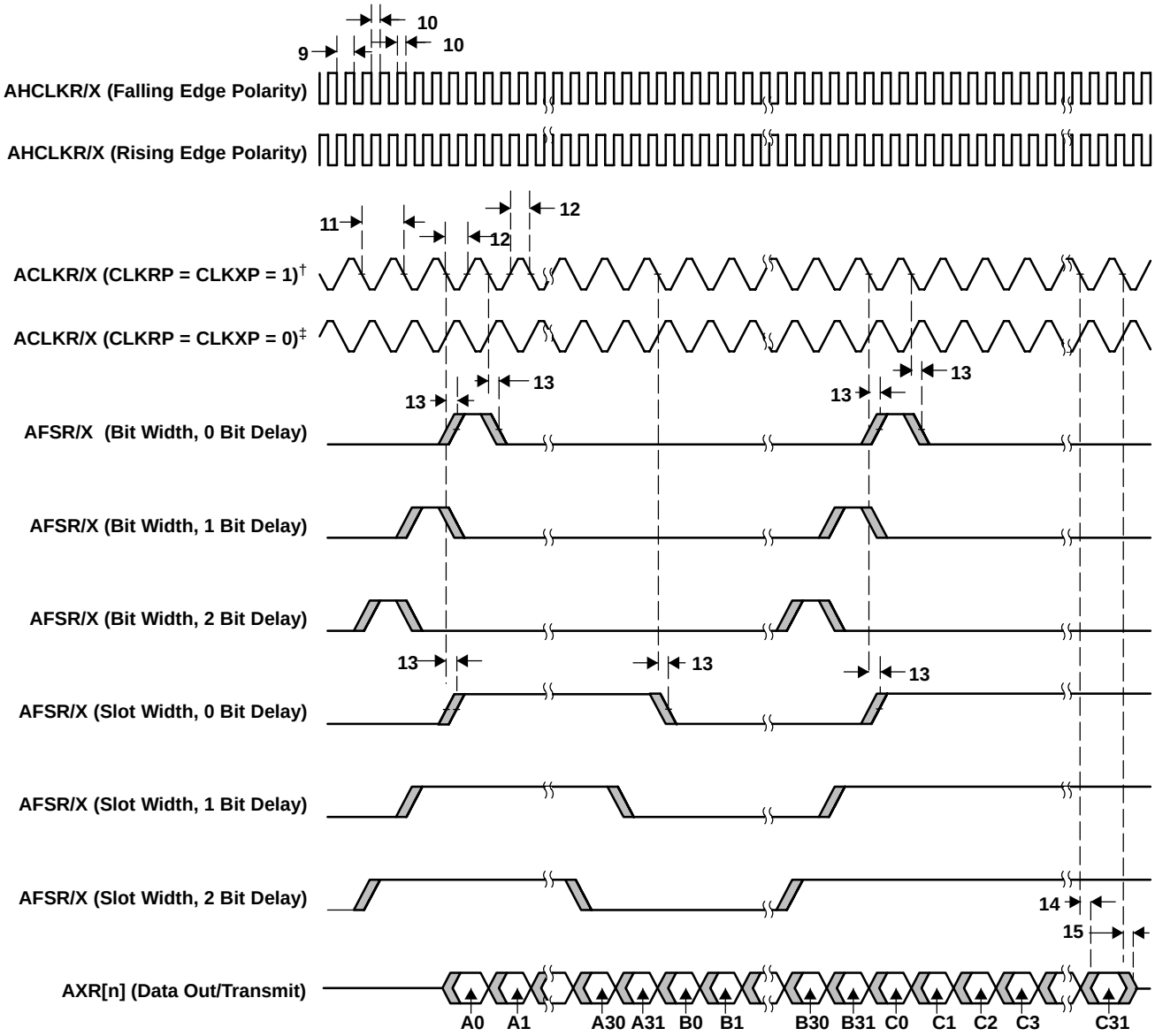

† For CLKRP = CLKXP = 1, the McASP transmitter is configured for falling edge (to shift data out) and the McASP receiver is configured for rising edge (to shift data in).

‡ For CLKRP = CLKXP = 0, the McASP transmitter is configured for rising edge (to shift data out) and the McASP receiver is configured for falling edge (to shift data in).

Figure 4−36. McASP Output Timings

4.10 Inter-Integrated Circuit (I2C)

The inter-integrated circuit (I2C) module provides an interface between a TMS320C6000™ DSP and other devices compliant with Philips Semiconductors Inter-IC bus (I^2C-bus) specification version 2.1 and connected by way of an I^2C-bus. External components attached to this 2-wire serial bus can transmit/receive up to 8-bit data to/from the DSP through the I2C module.

4.10.1 I2C Device-Specific Information

The I2C module on the TMS320DM641/DM640 may be used by the DSP to control local peripherals ICs (DACs, ADCs, etc.) while the other may be used to communicate with other controllers in a system or to implement a user interface.

The I2C port supports:

- Compatible with Philips I2C Specification Revision 2.1 (January 2000)
- Fast Mode up to 400 Kbps (no fail-safe I/O buffers)
- Noise Filter to Remove Noise 50 ns or less
- Seven- and Ten-Bit Device Addressing Modes
- Master (Transmit/Receive) and Slave (Transmit/Receive) Functionality
- Events: DMA, Interrupt, or Polling
- Slew-Rate Limited Open-Drain Output Buffers

Figure 4−37 is a block diagram of the I2C0 module.

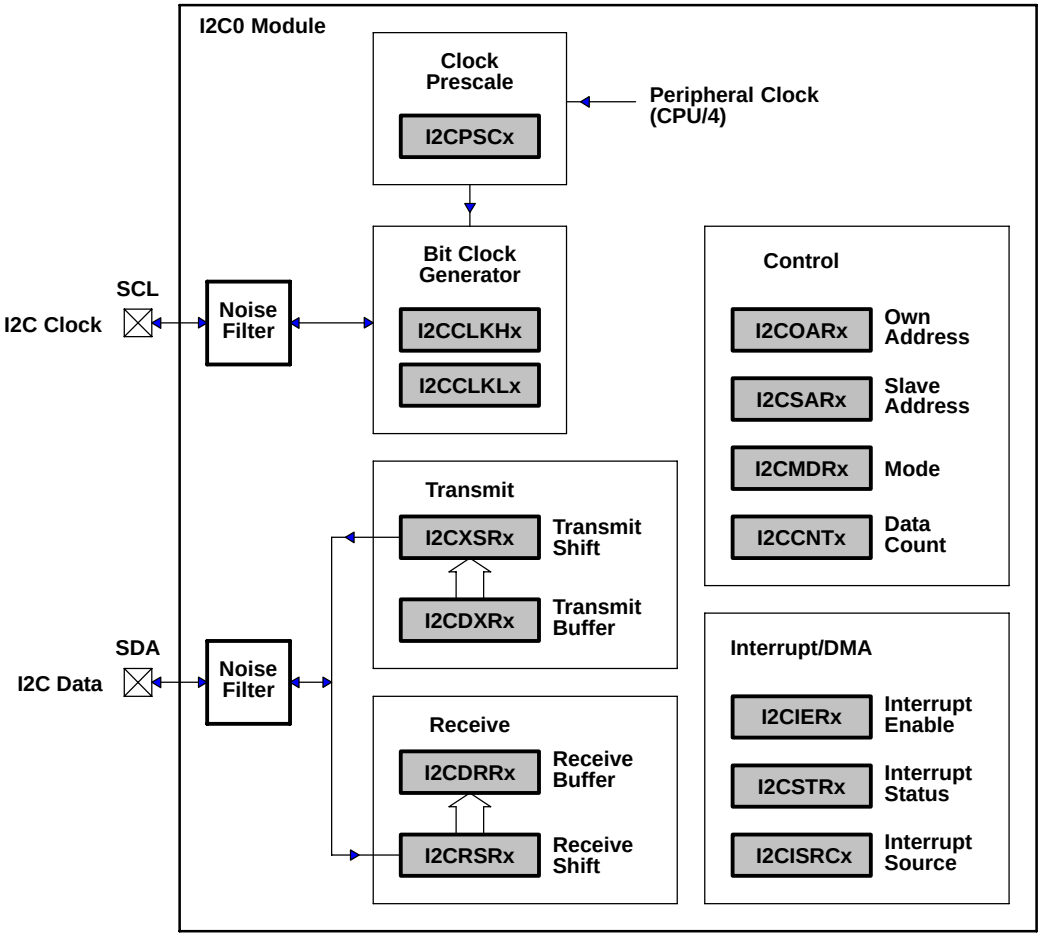

NOTE A: Shading denotes control/status registers.

Figure 4−37. I2C0 Module Block Diagram

For more detailed information on the I2C peripheral, see the *TMS320C6000 DSP Inter-Integrated Circuit (I2C) Module Reference Guide* (literature number SPRU175).

4.10.2 I2C Peripheral Register Description(s)

Table 4−35. I2C0 Registers

HEX ADDRESS RANGE	ACRONYM	REGISTER NAME
01B4 0000	I2COAR0	I2C0 own address register
01B4 0004	I2CIER0	I2C0 interrupt enable register
01B4 0008	I2CSTR0	I2C0 interrupt status register
01B4 000C	I2CCLKL0	I2C0 clock low-time divider register
01B4 0010	I2CCLKH0	I2C0 clock high-time divider register
01B4 0014	I2CCNT0	I2C0 data count register
01B4 0018	I2CDRR0	I2C0 data receive register
01B4 001C	I2CSAR0	I2C0 slave address register
01B4 0020	I2CDXR0	I2C0 data transmit register
01B4 0024	I2CMDR0	I2C0 mode register
01B4 0028	I2CISRC0	I2C0 interrupt source register
01B4 002C	−	Reserved
01B4 0030	I2CPSC0	I2C0 prescaler register
01B4 0034	I2CPID10	I2C0 Peripheral Identification register 1 [Value: 0x0000 0101]
01B4 0038	I2CPID20	I2C0 Peripheral Identification register 2 [Value: 0x0000 0005]
01B4 003C − 01B4 3FFF	−	Reserved

4.10.3 I2C Electrical Data/Timing

4.10.3.1 Inter-Integrated Circuits (I2C) Timing

Table 4−36. Timing Requirements for I2C Timings† (see Figure 4−38)

NO.			−400 −500 −600				UNIT
			STANDARD MODE		FAST MODE		
			MIN	MAX	MIN	MAX	
1	$t_{c(SCL)}$	Cycle time, SCL	10		2.5		µs
2	$t_{su(SCLH-SDAL)}$	Setup time, SCL high before SDA low (for a repeated START condition)	4.7		0.6		µs
3	$t_{h(SCLL-SDAL)}$	Hold time, SCL low after SDA low (for a START and a repeated START condition)	4		0.6		µs
4	$t_{w(SCLL)}$	Pulse duration, SCL low	4.7		1.3		µs
5	$t_{w(SCLH)}$	Pulse duration, SCL high	4		0.6		µs
6	$t_{su(SDAV-SDLH)}$	Setup time, SDA valid before SCL high	250		100‡		ns
7	$t_{h(SDA-SDLL)}$	Hold time, SDA valid after SCL low (For I2C bus™ devices)	0§		0§	0.9¶	µs
8	$t_{w(SDAH)}$	Pulse duration, SDA high between STOP and START conditions	4.7		1.3		µs
9	$t_{r(SDA)}$	Rise time, SDA		1000	20 + 0.1C_b#	300	ns
10	$t_{r(SCL)}$	Rise time, SCL		1000	20 + 0.1C_b#	300	ns
11	$t_{f(SDA)}$	Fall time, SDA		300	20 + 0.1C_b#	300	ns
12	$t_{f(SCL)}$	Fall time, SCL		300	20 + 0.1C_b#	300	ns
13	$t_{su(SCLH-SDAH)}$	Setup time, SCL high before SDA high (for STOP condition)	4		0.6		µs
14	$t_{w(SP)}$	Pulse duration, spike (must be suppressed)			0	50	ns
15	C_b#	Capacitive load for each bus line		400		400	pF

† The I2C pins SDA and SCL do not feature fail-safe I/O buffers. These pins could potentially draw current when the device is powered down.
‡ A Fast-mode I2C-bus™ device can be used in a Standard-mode I2C-bus™ system, but the requirement $t_{su(SDA-SCLH)} \geq 250$ ns must then be met. This will automatically be the case if the device does not stretch the LOW period of the SCL signal. If such a device does stretch the LOW period of the SCL signal, it must output the next data bit to the SDA line t_r max + $t_{su(SDA-SCLH)}$ = 1000 + 250 = 1250 ns (according to the Standard-mode I2C-Bus Specification) before the SCL line is released.
§ A device must internally provide a hold time of at least 300 ns for the SDA signal (referred to the V_{IHmin} of the SCL signal) to bridge the undefined region of the falling edge of SCL.
¶ The maximum $t_{h(SDA-SCLL)}$ has only to be met if the device does not stretch the low period [$t_{w(SCLL)}$] of the SCL signal.
# C_b = total capacitance of one bus line in pF. If mixed with HS-mode devices, faster fall-times are allowed.

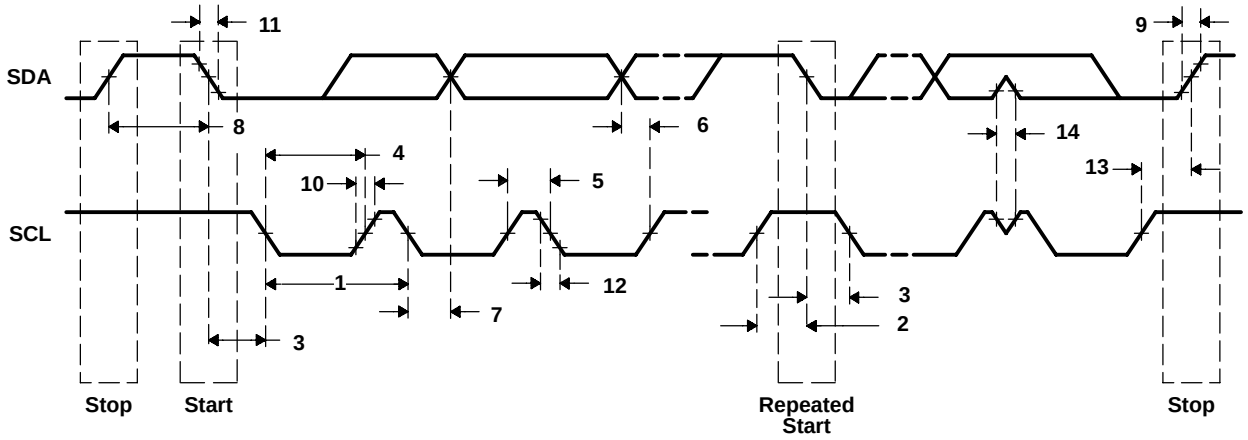

Figure 4−38. I2C Receive Timings

Table 4−37. Switching Characteristics for I2C Timings† (see Figure 4−39)

NO.	PARAMETER		−400 −500 −600				UNIT
			STANDARD MODE		FAST MODE		
			MIN	MAX	MIN	MAX	
16	$t_{c(SCL)}$	Cycle time, SCL	10		2.5		µs
17	$t_{d(SCLH-SDAL)}$	Delay time, SCL high to SDA low (for a repeated START condition)	4.7		0.6		µs
18	$t_{d(SDAL-SCLL)}$	Delay time, SDA low to SCL low (for a START and a repeated START condition)	4		0.6		µs
19	$t_{w(SCLL)}$	Pulse duration, SCL low	4.7		1.3		µs
20	$t_{w(SCLH)}$	Pulse duration, SCL high	4		0.6		µs
21	$t_{d(SDAV-SDLH)}$	Delay time, SDA valid to SCL high	250		100		ns
22	$t_{v(SDLL-SDAV)}$	Valid time, SDA valid after SCL low (For I^2C bus™ devices)	0		0	0.9	µs
23	$t_{w(SDAH)}$	Pulse duration, SDA high between STOP and START conditions	4.7		1.3		µs
24	$t_{r(SDA)}$	Rise time, SDA		1000	$20 + 0.1C_b$†	300	ns
25	$t_{r(SCL)}$	Rise time, SCL		1000	$20 + 0.1C_b$†	300	ns
26	$t_{f(SDA)}$	Fall time, SDA		300	$20 + 0.1C_b$†	300	ns
27	$t_{f(SCL)}$	Fall time, SCL		300	$20 + 0.1C_b$†	300	ns
28	$t_{d(SCLH-SDAH)}$	Delay time, SCL high to SDA high (for STOP condition)	4		0.6		µs
29	C_p	Capacitance for each I2C pin		10		10	pF

† C_b = total capacitance of one bus line in pF. If mixed with HS-mode devices, faster fall-times are allowed.

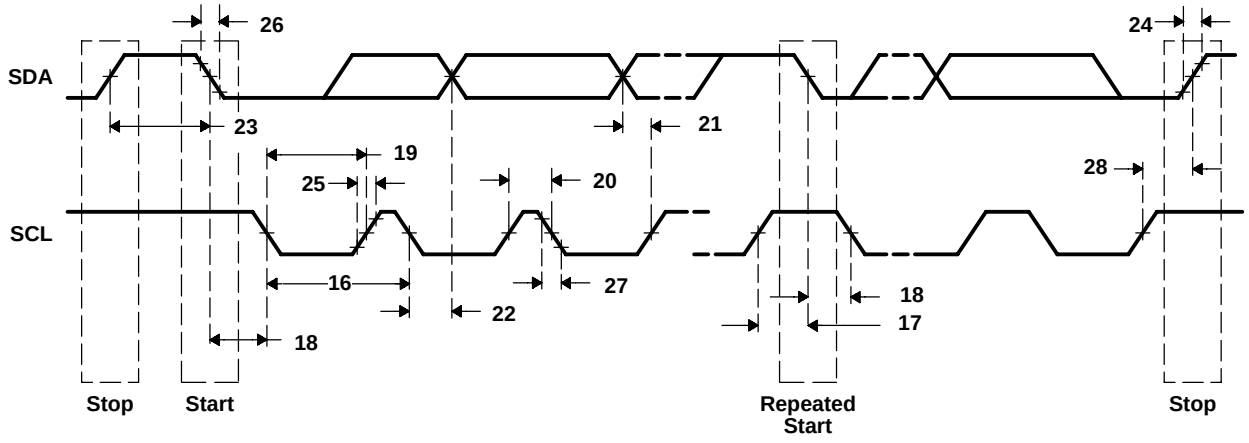

Figure 4−39. I2C Transmit Timings

4.11 Host-Port Interface (HPI) [DM641 Only]

The HPI is a parallel port through which a host processor can directly access the CPU memory space. The host device functions as a master to the interface, which increases ease of access. The host and CPU can exchange information via internal or external memory. The host also has direct access to memory-mapped peripherals. Connectivity to the CPU memory space is provided through the enhanced DMA (EDMA) controller. Both the host and the CPU can access the HPI control register (HPIC) and the HPI address register (HPIA). The host can access the HPI data register (HPID) and the HPIC by using the external data and interface control signals.

For more detailed information on the HPI peripheral, see the *TMS320C6000 DSP Host Port Interface (HPI) Reference Guide* (literature number SPRU578).

4.11.1 HPI Peripheral Register Description(s) [DM641 Only]

Table 4−38. HPI Registers [DM641 Only]

HEX ADDRESS RANGE	ACRONYM	REGISTER NAME	COMMENTS
−	HPID	HPI data register	Host read/write access only
0188 0000	HPIC	HPI control register	HPIC has both Host/CPU read/write access
0188 0004	HPIA (HPIAW)†	HPI address register (Write)	HPIA has both Host/CPU read/write access
0188 0008	HPIA (HPIAR)†	HPI address register (Read)	
0188 000C − 0189 FFFF	−	Reserved	
018A 0000	HPI_TRCTL	HPI transfer request control register	
018A 0004 − 018B FFFF	−	Reserved	

† Host access to the HPIA register updates both the HPIAW and HPIAR registers. The CPU can access HPIAW and HPIAR independently.

4.11.2 Host-Port Interface (HPI) Electrical Data/Timing [DM641 Only]

Table 4−39. Timing Requirements for Host-Port Interface Cycles†‡ (see Figure 4−40 through Figure 4−43) [DM641 Only]

NO.			−400 −500 −600		UNIT
			MIN	MAX	
1	$t_{su(SELV-HSTBL)}$	Setup time, select signals§ valid before $\overline{\text{HSTROBE}}$ low	5		ns
2	$t_{h(HSTBL-SELV)}$	Hold time, select signals§ valid after $\overline{\text{HSTROBE}}$ low	2.4		ns
3	$t_{w(HSTBL)}$	Pulse duration, $\overline{\text{HSTROBE}}$ low	4P¶		ns
4	$t_{w(HSTBH)}$	Pulse duration, $\overline{\text{HSTROBE}}$ high between consecutive accesses	4P		ns
10	$t_{su(SELV-HASL)}$	Setup time, select signals§ valid before $\overline{\text{HAS}}$ low	5		ns
11	$t_{h(HASL-SELV)}$	Hold time, select signals§ valid after $\overline{\text{HAS}}$ low	2		ns
12	$t_{su(HDV-HSTBH)}$	Setup time, host data valid before $\overline{\text{HSTROBE}}$ high	5		ns
13	$t_{h(HSTBH-HDV)}$	Hold time, host data valid after $\overline{\text{HSTROBE}}$ high	2.8		ns
14	$t_{h(HRDYL-HSTBL)}$	Hold time, $\overline{\text{HSTROBE}}$ low after $\overline{\text{HRDY}}$ low. $\overline{\text{HSTROBE}}$ should not be inactivated until $\overline{\text{HRDY}}$ is active (low); otherwise, HPI writes will not complete properly.	2		ns
18	$t_{su(HASL-HSTBL)}$	Setup time, $\overline{\text{HAS}}$ low before $\overline{\text{HSTROBE}}$ low	2		ns
19	$t_{h(HSTBL-HASL)}$	Hold time, $\overline{\text{HAS}}$ low after $\overline{\text{HSTROBE}}$ low	2.1		ns

† $\overline{\text{HSTROBE}}$ refers to the following logical operation on $\overline{\text{HCS}}$, $\overline{\text{HDS1}}$, and $\overline{\text{HDS2}}$: [NOT($\overline{\text{HDS1}}$ XOR $\overline{\text{HDS2}}$)] OR $\overline{\text{HCS}}$.
‡ P = 1/CPU clock frequency in ns. For example, when running parts at 600 MHz, use P = 1.67 ns.
§ Select signals include: HCNTL[1:0], HR/$\overline{\text{W}}$, and HHWIL.
¶ Select the parameter value of 4P or 12.5 ns, whichever is larger.

Table 4−40. Switching Characteristics Over Recommended Operating Conditions During Host-Port Interface Cycles†‡ (see Figure 4−40 through Figure 4−43) [DM641 Only]

NO.	PARAMETER		−400 −500 −600		UNIT
			MIN	MAX	
6	$t_{d(HSTBL-HRDYH)}$	Delay time, $\overline{HSTROBE}$ low to $\overline{HRDY}$ high#	1.3	4P + 8	ns
7	$t_{d(HSTBL-HDLZ)}$	Delay time, $\overline{HSTROBE}$ low to HD low impedance for an HPI read	2		ns
8	$t_{d(HDV-HRDYL)}$	Delay time, HD valid to $\overline{HRDY}$ low	−3		ns
9	$t_{oh(HSTBH-HDV)}$	Output hold time, HD valid after $\overline{HSTROBE}$ high	1.5		ns
15	$t_{d(HSTBH-HDHZ)}$	Delay time, $\overline{HSTROBE}$ high to HD high impedance		12	ns
16	$t_{d(HSTBL-HDV)}$	Delay time, $\overline{HSTROBE}$ low to HD valid (HPI16 mode, 2nd half-word only)		4P + 8	ns

† $\overline{HSTROBE}$ refers to the following logical operation on $\overline{HCS}$, $\overline{HDS1}$, and $\overline{HDS2}$: [NOT($\overline{HDS1}$ XOR $\overline{HDS2}$)] OR $\overline{HCS}$.

‡ P = 1/CPU clock frequency in ns. For example, when running parts at 600 MHz, use P = 1.67 ns.

This parameter is used during HPID reads and writes. For reads, at the beginning of the first half-word transfer (HPI16) on the falling edge of $\overline{HSTROBE}$, the HPI sends the request to the EDMA internal address generation hardware, and $\overline{HRDY}$ remains high until the EDMA internal address generation hardware loads the requested data into HPID. For writes, $\overline{HRDY}$ goes high if the internal write buffer is full.

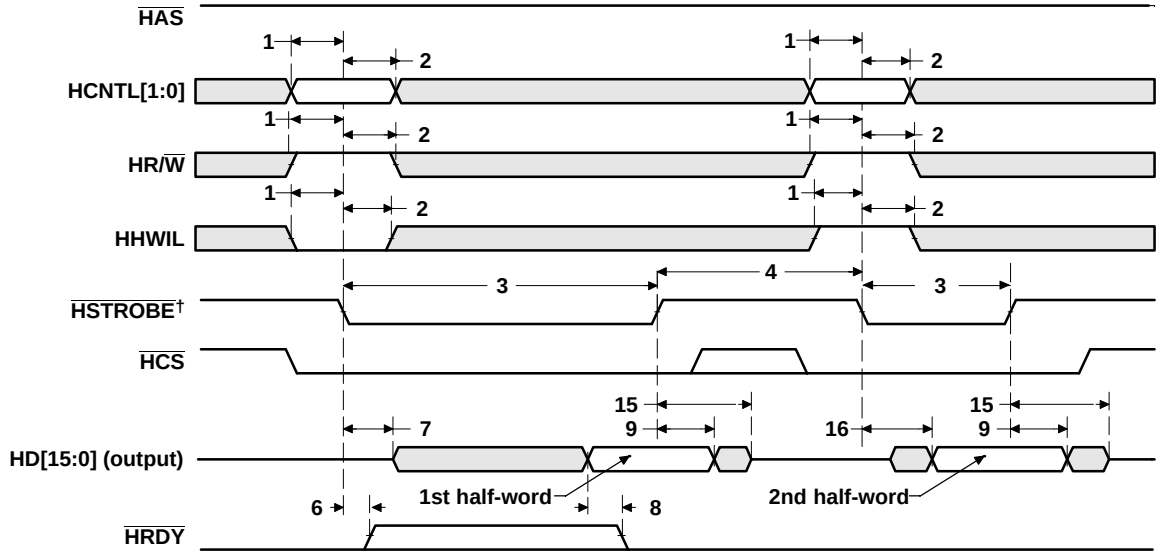

† $\overline{HSTROBE}$ refers to the following logical operation on $\overline{HCS}$, $\overline{HDS1}$, and $\overline{HDS2}$: [NOT($\overline{HDS1}$ XOR $\overline{HDS2}$)] OR $\overline{HCS}$.

Figure 4−40. HPI16 Read Timing ($\overline{HAS}$ Not Used, Tied High) [DM641 Only]

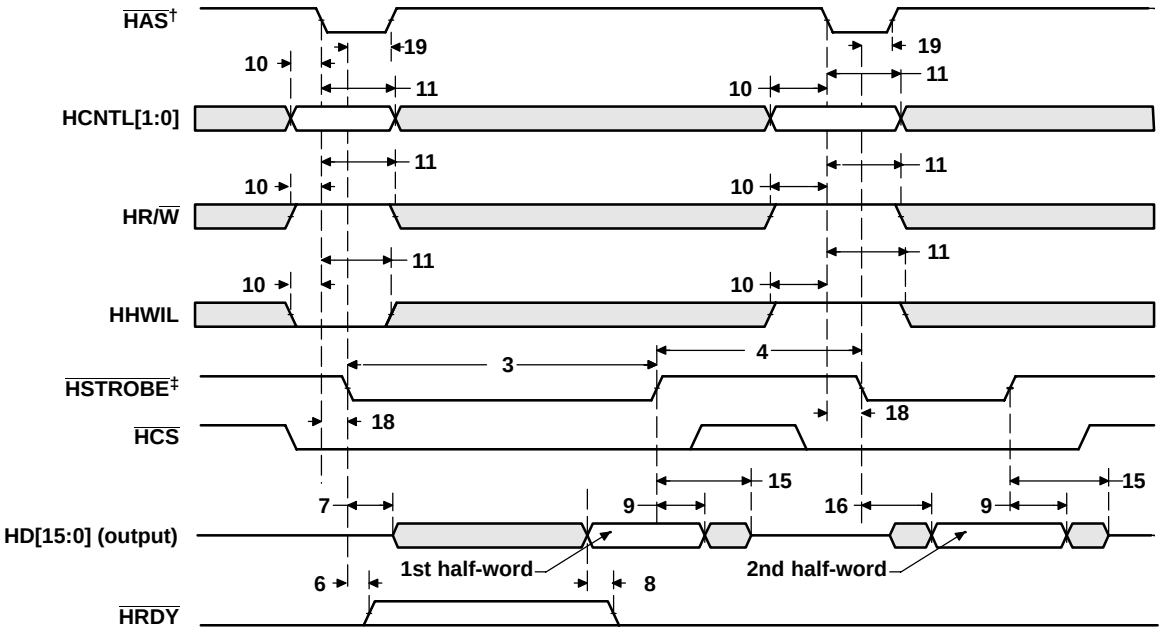

† For correct operation, strobe the HAS signal only once per HSTROBE active cycle.
‡ HSTROBE refers to the following logical operation on HCS, HDS1, and HDS2: [NOT(HDS1 XOR HDS2)] OR HCS.

Figure 4−41. HPI16 Read Timing (HAS Used) [DM641 Only]

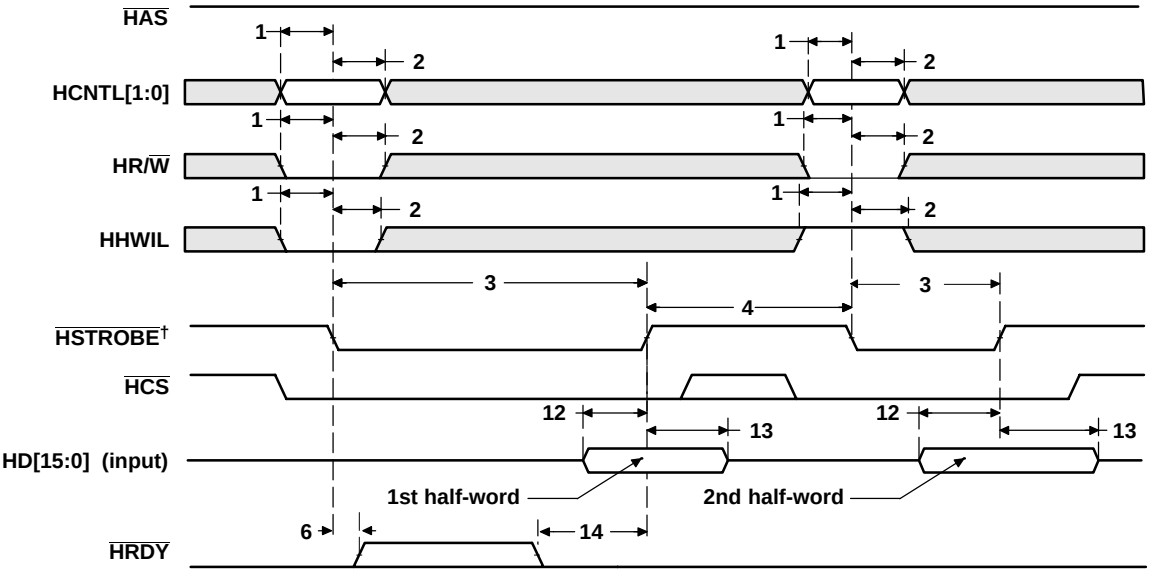

† HSTROBE refers to the following logical operation on HCS, HDS1, and HDS2: [NOT(HDS1 XOR HDS2)] OR HCS.

Figure 4−42. HPI16 Write Timing (HAS Not Used, Tied High) [DM641 Only]

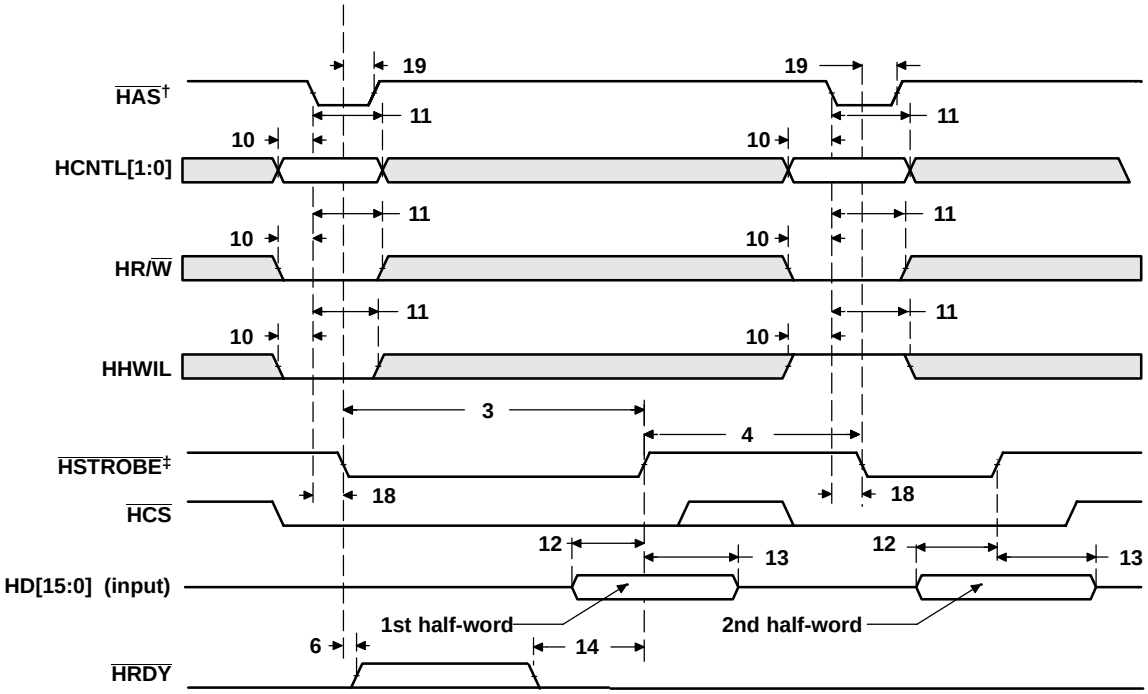

† For correct operation, strobe the HAS signal only once per HSTROBE active cycle.
‡ HSTROBE refers to the following logical operation on HCS, HDS1, and HDS2: [NOT(HDS1 XOR HDS2)] OR HCS.

Figure 4−43. HPI16 Write Timing (HAS Used) [DM641 Only]

4.12 Multichannel Buffered Serial Port (McBSP)

The McBSP provides these functions:

- Full-duplex communication
- Double-buffered data registers, which allow a continuous data stream
- Independent framing and clocking for receive and transmit
- Direct interface to industry-standard codecs, analog interface chips (AICs), and other serially connected analog-to-digital (A/D) and digital-to-analog (D/A) devices
- External shift clock or an internal, programmable frequency shift clock for data transfer

For more detailed information on the McBSP peripheral, see the *TMS320C6000 DSP Multichannel Buffered Serial Port (McBSP) Reference Guide* (literature number SPRU580).

4.12.1 McBSP Peripheral Register Description(s)

Table 4−41. McBSP 0 Registers

HEX ADDRESS RANGE	ACRONYM	REGISTER NAME	COMMENTS
018C 0000	DRR0	McBSP0 data receive register via Configuration Bus	The CPU and EDMA controller can only read this register; they cannot write to it.
0x3000 0000 − 0x33FF FFFF	DRR0	McBSP0 data receive register via Peripheral Bus	
018C 0004	DXR0	McBSP0 data transmit register via Configuration Bus	
0x3000 0000 − 0x33FF FFFF	DXR0	McBSP0 data transmit register via Peripheral Bus	
018C 0008	SPCR0	McBSP0 serial port control register	
018C 000C	RCR0	McBSP0 receive control register	
018C 0010	XCR0	McBSP0 transmit control register	
018C 0014	SRGR0	McBSP0 sample rate generator register	
018C 0018	MCR0	McBSP0 multichannel control register	
018C 001C	RCERE00	McBSP0 enhanced receive channel enable register 0	
018C 0020	XCERE00	McBSP0 enhanced transmit channel enable register 0	
018C 0024	PCR0	McBSP0 pin control register	
018C 0028	RCERE10	McBSP0 enhanced receive channel enable register 1	
018C 002C	XCERE10	McBSP0 enhanced transmit channel enable register 1	
018C 0030	RCERE20	McBSP0 enhanced receive channel enable register 2	
018C 0034	XCERE20	McBSP0 enhanced transmit channel enable register 2	
018C 0038	RCERE30	McBSP0 enhanced receive channel enable register 3	
018C 003C	XCERE30	McBSP0 enhanced transmit channel enable register 3	
018C 0040 − 018F FFFF	–	Reserved	

Table 4−42. McBSP 1 Registers

HEX ADDRESS RANGE	ACRONYM	REGISTER NAME	COMMENTS
0190 0000	DRR1	McBSP1 data receive register via Configuration Bus	The CPU and EDMA controller can only read this register; they cannot write to it.
0x3400 0000 − 0x37FF FFFF	DRR1	McBSP1 data receive register via peripheral bus	
0190 0004	DXR1	McBSP1 data transmit register via configuration bus	
0x3400 0000 − 0x37FF FFFF	DXR1	McBSP1 data transmit register via peripheral bus	
0190 0008	SPCR1	McBSP1 serial port control register	
0190 000C	RCR1	McBSP1 receive control register	
0190 0010	XCR1	McBSP1 transmit control register	
0190 0014	SRGR1	McBSP1 sample rate generator register	
0190 0018	MCR1	McBSP1 multichannel control register	
0190 001C	RCERE01	McBSP1 enhanced receive channel enable register 0	
0190 0020	XCERE01	McBSP1 enhanced transmit channel enable register 0	
0190 0024	PCR1	McBSP1 pin control register	
0190 0028	RCERE11	McBSP1 enhanced receive channel enable register 1	
0190 002C	XCERE11	McBSP1 enhanced transmit channel enable register 1	
0190 0030	RCERE21	McBSP1 enhanced receive channel enable register 2	
0190 0034	XCERE21	McBSP1 enhanced transmit channel enable register 2	
0190 0038	RCERE31	McBSP1 enhanced receive channel enable register 3	
0190 003C	XCERE31	McBSP1 enhanced transmit channel enable register 3	
0190 0040 − 0193 FFFF	–	Reserved	

4.12.2 McBSP Electrical Data/Timing

4.12.2.1 Multichannel Buffered Serial Port (McBSP) Timing

Table 4−43. Timing Requirements for McBSP† (see Figure 4−44)

NO.				−400 −500 −600	UNIT
				MIN MAX	
2	$t_{c(CKRX)}$	Cycle time, CLKR/X	CLKR/X ext	4P or 6.67‡§	ns
3	$t_{w(CKRX)}$	Pulse duration, CLKR/X high or CLKR/X low	CLKR/X ext	$0.5t_{c(CKRX)}$ − 1¶	ns
5	$t_{su(FRH-CKRL)}$	Setup time, external FSR high before CLKR low	CLKR int	9	ns
			CLKR ext	1.3	
6	$t_{h(CKRL-FRH)}$	Hold time, external FSR high after CLKR low	CLKR int	6	ns
			CLKR ext	3	
7	$t_{su(DRV-CKRL)}$	Setup time, DR valid before CLKR low	CLKR int	8	ns
			CLKR ext	0.9	
8	$t_{h(CKRL-DRV)}$	Hold time, DR valid after CLKR low	CLKR int	3	ns
			CLKR ext	3.1	
10	$t_{su(FXH-CKXL)}$	Setup time, external FSX high before CLKX low	CLKX int	9	ns
			CLKX ext	1.3	
11	$t_{h(CKXL-FXH)}$	Hold time, external FSX high after CLKX low	CLKX int	6	ns
			CLKX ext	3	

† CLKRP = CLKXP = FSRP = FSXP = 0. If polarity of any of the signals is inverted, then the timing references of that signal are also inverted.
‡ P = 1/CPU clock frequency in ns. For example, when running parts at 600 MHz, use P = 1.67 ns.
§ Use whichever value is greater. Minimum CLKR/X cycle times *must* be met, even when CLKR/X is generated by an internal clock source. The minimum CLKR/X cycle times are based on internal logic speed; the maximum usable speed may be lower due to EDMA limitations and AC timing requirements.
¶ This parameter applies to the maximum McBSP frequency. Operate serial clocks (CLKR/X) in the reasonable range of 40/60 duty cycle.

Table 4−44. Switching Characteristics Over Recommended Operating Conditions for McBSP†‡ (see Figure 4−44)

NO.	PARAMETER			−400 −500 −600		UNIT
				MIN	MAX	
1	$t_{d(CKSH-CKRXH)}$	Delay time, CLKS high to CLKR/X high for internal CLKR/X generated from CLKS input		1.4	10	ns
2	$t_{c(CKRX)}$	Cycle time, CLKR/X	CLKR/X int	4P or 6.67§¶#		ns
3	$t_{w(CKRX)}$	Pulse duration, CLKR/X high or CLKR/X low	CLKR/X int	C − 1‖	C + 1‖	ns
4	$t_{d(CKRH-FRV)}$	Delay time, CLKR high to internal FSR valid	CLKR int	−2.1	3	ns
9	$t_{d(CKXH-FXV)}$	Delay time, CLKX high to internal FSX valid	CLKX int	−1.7	3	ns
			CLKX ext	1.7	9	
12	$t_{dis(CKXH-DXHZ)}$	Disable time, DX high impedance following last data bit from CLKX high	CLKX int	−3.9	4	ns
			CLKX ext	−2.1	9	
13	$t_{d(CKXH-DXV)}$	Delay time, CLKX high to DX valid	CLKX int	−3.9 + D1☆	4 + D2☆	ns
			CLKX ext	−2.1 + D1☆	9 + D2☆	
14	$t_{d(FXH-DXV)}$	Delay time, FSX high to DX valid	FSX int	−2.3 + D1□	5.6 + D2□	ns
		ONLY applies when in data delay 0 (XDATDLY = 00b) mode	FSX ext	1.9 + D1□	9 + D2□	

† CLKRP = CLKXP = FSRP = FSXP = 0. If polarity of any of the signals is inverted, then the timing references of that signal are also inverted.

‡ Minimum delay times also represent minimum output hold times.

§ Minimum CLKR/X cycle times must be met, even when CLKR/X is generated by an internal clock source. Minimum CLKR/X cycle times are based on internal logic speed; the maximum usable speed may be lower due to EDMA limitations and AC timing requirements.

¶ P = 1/CPU clock frequency in ns. For example, when running parts at 600 MHz, use P = 1.67 ns.

Use whichever value is greater.

‖ C = H or L
S = sample rate generator input clock = 4P if CLKSM = 1 (P = 1/CPU clock frequency)
= sample rate generator input clock = P_clks if CLKSM = 0 (P_clks = CLKS period)
H = CLKX high pulse width = (CLKGDV/2 + 1) * S if CLKGDV is even
= (CLKGDV + 1)/2 * S if CLKGDV is odd or zero
L = CLKX low pulse width = (CLKGDV/2) * S if CLKGDV is even
= (CLKGDV + 1)/2 * S if CLKGDV is odd or zero
CLKGDV should be set appropriately to ensure the McBSP bit rate does not exceed the maximum limit (see ¶ footnote above).

☆Extra delay from CLKX high to DX valid **applies *only* to the first data bit of a device**, if and only if DXENA = 1 in SPCR.
if DXENA = 0, then D1 = D2 = 0
if DXENA = 1, then D1 = 4P, D2 = 8P

□Extra delay from FSX high to DX valid **applies *only* to the first data bit of a device**, if and only if DXENA = 1 in SPCR.
if DXENA = 0, then D1 = D2 = 0
if DXENA = 1, then D1 = 4P, D2 = 8P

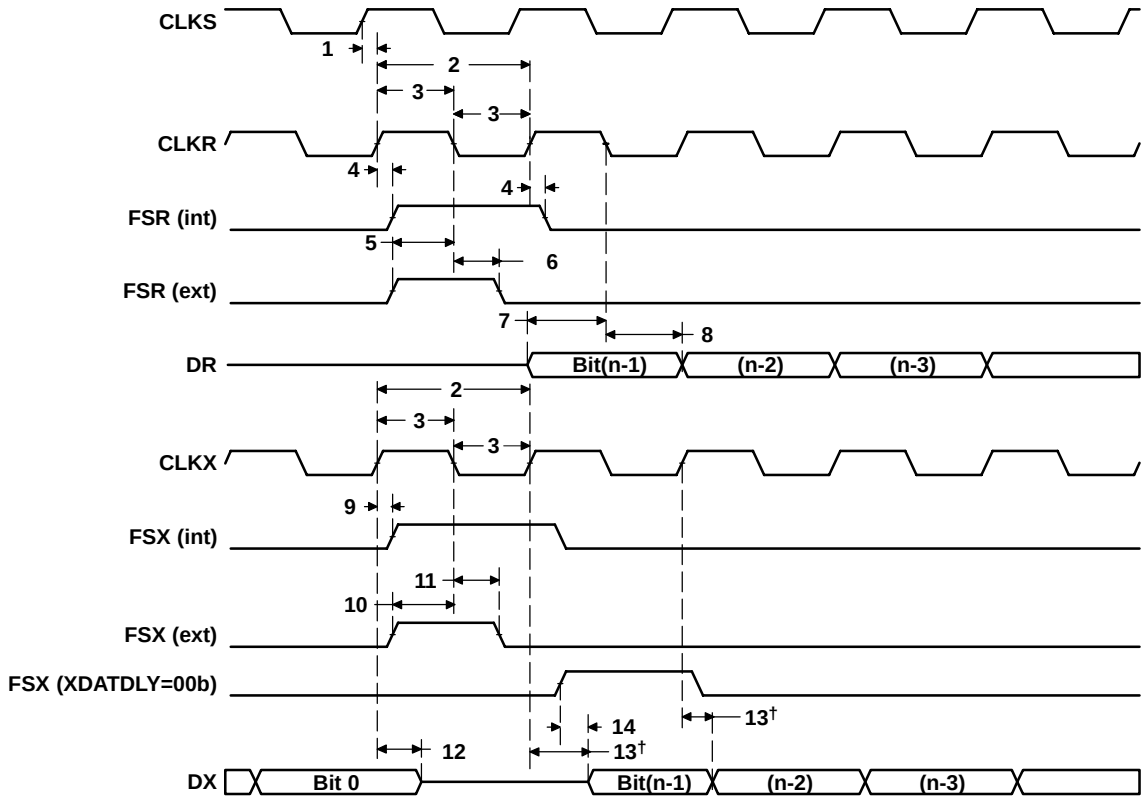

† Parameter No. 13 applies to the first data bit *only* when XDATDLY ≠ 0.

Figure 4−44. McBSP Timing

Table 4−45. Timing Requirements for FSR When GSYNC = 1 (see Figure 4−45)

NO.			−400 −500 −600		UNIT
			MIN	MAX	
1	$t_{su(FRH-CKSH)}$	Setup time, FSR high before CLKS high	4		ns
2	$t_{h(CKSH-FRH)}$	Hold time, FSR high after CLKS high	4		ns

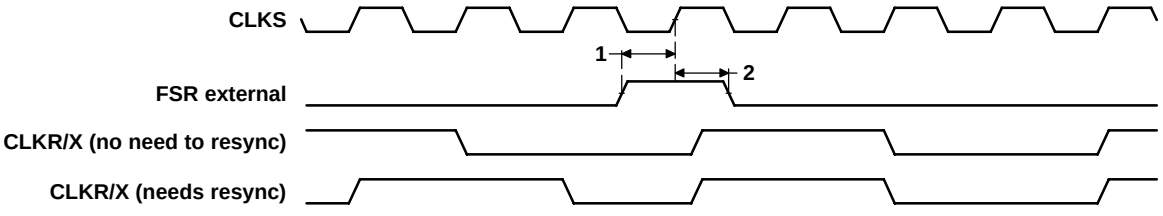

Figure 4−45. FSR Timing When GSYNC = 1

Table 4−46. Timing Requirements for McBSP as SPI Master or Slave: CLKSTP = 10b, CLKXP = 0†‡ (see Figure 4−46)

NO.			−400 −500 −600				UNIT
			MASTER		SLAVE		
			MIN	MAX	MIN	MAX	
4	$t_{su(DRV-CKXL)}$	Setup time, DR valid before CLKX low	12		2 − 12P		ns
5	$t_{h(CKXL-DRV)}$	Hold time, DR valid after CLKX low	4		5 + 24P		ns

† P = 1/CPU clock frequency in ns. For example, when running parts at 600 MHz, use P = 1.67 ns.
‡ For all SPI Slave modes, CLKG is programmed as 1/4 of the CPU clock by setting CLKSM = CLKGDV = 1.

Table 4−47. Switching Characteristics Over Recommended Operating Conditions for McBSP as SPI Master or Slave: CLKSTP = 10b, CLKXP = 0†‡ (see Figure 4−46)

NO.	PARAMETER		−400 −500 −600				UNIT
			MASTER§		SLAVE		
			MIN	MAX	MIN	MAX	
1	$t_{h(CKXL-FXL)}$	Hold time, FSX low after CLKX low¶	T − 2	T + 3			ns
2	$t_{d(FXL-CKXH)}$	Delay time, FSX low to CLKX high#	L − 2.5	L + 3			ns
3	$t_{d(CKXH-DXV)}$	Delay time, CLKX high to DX valid	−2	4	12P + 2.8	20P + 17	ns
6	$t_{dis(CKXL-DXHZ)}$	Disable time, DX high impedance following last data bit from CLKX low	L − 2	L + 3			ns
7	$t_{dis(FXH-DXHZ)}$	Disable time, DX high impedance following last data bit from FSX high			4P + 3	12P + 17	ns
8	$t_{d(FXL-DXV)}$	Delay time, FSX low to DX valid			8P + 1.8	16P + 17	ns

† P = 1/CPU clock frequency in ns. For example, when running parts at 600 MHz, use P = 1.67 ns.
‡ For all SPI Slave modes, CLKG is programmed as 1/4 of the CPU clock by setting CLKSM = CLKGDV = 1.
§ S = Sample rate generator input clock = 4P if CLKSM = 1 (P = 1/CPU clock frequency)
= Sample rate generator input clock = P_clks if CLKSM = 0 (P_clks = CLKS period)
T = CLKX period = (1 + CLKGDV) * S
H = CLKX high pulse width = (CLKGDV/2 + 1) * S if CLKGDV is even
= (CLKGDV + 1)/2 * S if CLKGDV is odd or zero
L = CLKX low pulse width = (CLKGDV/2) * S if CLKGDV is even
= (CLKGDV + 1)/2 * S if CLKGDV is odd or zero
¶ FSRP = FSXP = 1. As a SPI Master, FSX is inverted to provide active-low slave-enable output. As a Slave, the active-low signal input on FSX and FSR is inverted before being used internally.
CLKXM = FSXM = 1, CLKRM = FSRM = 0 for Master McBSP
CLKXM = CLKRM = FSXM = FSRM = 0 for Slave McBSP
# FSX should be low before the rising edge of clock to enable Slave devices and then begin a SPI transfer at the rising edge of the Master clock (CLKX).

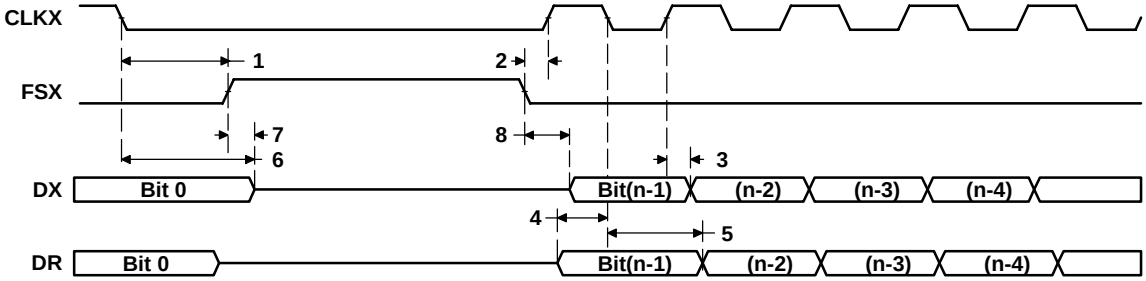

Figure 4−46. McBSP Timing as SPI Master or Slave: CLKSTP = 10b, CLKXP = 0

Table 4−48. Timing Requirements for McBSP as SPI Master or Slave: CLKSTP = 11b, CLKXP = 0†‡ (see Figure 4−47)

NO.			−400 −500 −600				UNIT
			MASTER		SLAVE		
			MIN	MAX	MIN	MAX	
4	$t_{su(DRV-CKXH)}$	Setup time, DR valid before CLKX high	12		2 − 12P		ns
5	$t_{h(CKXH-DRV)}$	Hold time, DR valid after CLKX high	4		5 + 24P		ns

† P = 1/CPU clock frequency in ns. For example, when running parts at 600 MHz, use P = 1.67 ns.
‡ For all SPI Slave modes, CLKG is programmed as 1/4 of the CPU clock by setting CLKSM = CLKGDV = 1.

Table 4−49. Switching Characteristics Over Recommended Operating Conditions for McBSP as SPI Master or Slave: CLKSTP = 11b, CLKXP = 0†‡ (see Figure 4−47)

NO.	PARAMETER		−400 −500 −600				UNIT
			MASTER§		SLAVE		
			MIN	MAX	MIN	MAX	
1	$t_{h(CKXL-FXL)}$	Hold time, FSX low after CLKX low¶	L − 2	L + 3			ns
2	$t_{d(FXL-CKXH)}$	Delay time, FSX low to CLKX high#	T − 2.5	T + 3			ns
3	$t_{d(CKXL-DXV)}$	Delay time, CLKX low to DX valid	−2	4	12P + 3	20P + 17	ns
6	$t_{dis(CKXL-DXHZ)}$	Disable time, DX high impedance following last data bit from CLKX low	−2	4	12P + 3	20P + 17	ns
7	$t_{d(FXL-DXV)}$	Delay time, FSX low to DX valid	H − 2	H + 4	8P + 2	16P + 17	ns

† P = 1/CPU clock frequency in ns. For example, when running parts at 600 MHz, use P = 1.67 ns.
‡ For all SPI Slave modes, CLKG is programmed as 1/4 of the CPU clock by setting CLKSM = CLKGDV = 1.
§ S = Sample rate generator input clock = 4P if CLKSM = 1 (P = 1/CPU clock frequency)
= Sample rate generator input clock = P_clks if CLKSM = 0 (P_clks = CLKS period)
T = CLKX period = (1 + CLKGDV) * S
H = CLKX high pulse width = (CLKGDV/2 + 1) * S if CLKGDV is even
= (CLKGDV + 1)/2 * S if CLKGDV is odd or zero
L = CLKX low pulse width = (CLKGDV/2) * S if CLKGDV is even
= (CLKGDV + 1)/2 * S if CLKGDV is odd or zero
¶ FSRP = FSXP = 1. As a SPI Master, FSX is inverted to provide active-low slave-enable output. As a Slave, the active-low signal input on FSX and FSR is inverted before being used internally.
CLKXM = FSXM = 1, CLKRM = FSRM = 0 for Master McBSP
CLKXM = CLKRM = FSXM = FSRM = 0 for Slave McBSP
# FSX should be low before the rising edge of clock to enable Slave devices and then begin a SPI transfer at the rising edge of the Master clock (CLKX).

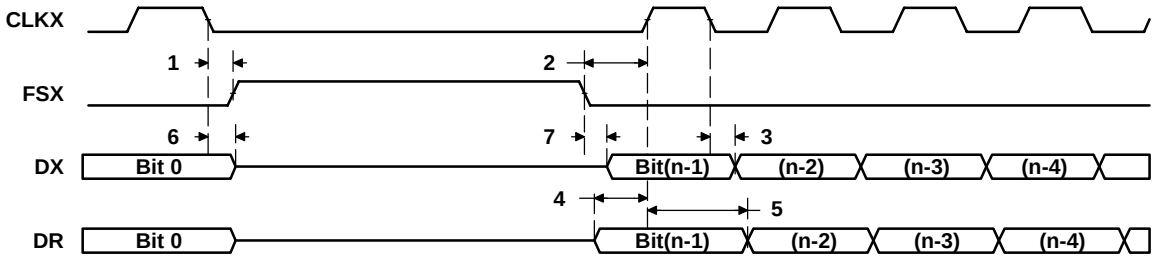

Figure 4−47. McBSP Timing as SPI Master or Slave: CLKSTP = 11b, CLKXP = 0

Table 4−50. Timing Requirements for McBSP as SPI Master or Slave: CLKSTP = 10b, CLKXP = 1[†‡] (see Figure 4−48)

NO.			−400 −500 −600				UNIT
			MASTER		SLAVE		
			MIN	MAX	MIN	MAX	
4	$t_{su(DRV-CKXH)}$	Setup time, DR valid before CLKX high	12		2 − 12P		ns
5	$t_{h(CKXH-DRV)}$	Hold time, DR valid after CLKX high	4		5 + 24P		ns

† P = 1/CPU clock frequency in ns. For example, when running parts at 600 MHz, use P = 1.67 ns.
‡ For all SPI Slave modes, CLKG is programmed as 1/4 of the CPU clock by setting CLKSM = CLKGDV = 1.

Table 4−51. Switching Characteristics Over Recommended Operating Conditions for McBSP as SPI Master or Slave: CLKSTP = 10b, CLKXP = 1[†‡] (see Figure 4−48)

NO.	PARAMETER		−400 −500 −600				UNIT
			MASTER[§]		SLAVE		
			MIN	MAX	MIN	MAX	
1	$t_{h(CKXH-FXL)}$	Hold time, FSX low after CLKX high[¶]	T − 2	T + 3			ns
2	$t_{d(FXL-CKXL)}$	Delay time, FSX low to CLKX low[#]	H − 2.5	H + 3			ns
3	$t_{d(CKXL-DXV)}$	Delay time, CLKX low to DX valid	−2	4	12P + 3	20P + 17	ns
6	$t_{dis(CKXH-DXHZ)}$	Disable time, DX high impedance following last data bit from CLKX high	H − 2	H + 3			ns
7	$t_{dis(FXH-DXHZ)}$	Disable time, DX high impedance following last data bit from FSX high			4P + 3	12P + 17	ns
8	$t_{d(FXL-DXV)}$	Delay time, FSX low to DX valid			8P + 2	16P + 17	ns

† P = 1/CPU clock frequency in ns. For example, when running parts at 600 MHz, use P = 1.67 ns.
‡ For all SPI Slave modes, CLKG is programmed as 1/4 of the CPU clock by setting CLKSM = CLKGDV = 1.
§ S = Sample rate generator input clock = 4P if CLKSM = 1 (P = 1/CPU clock frequency)
= Sample rate generator input clock = P_clks if CLKSM = 0 (P_clks = CLKS period)
T = CLKX period = (1 + CLKGDV) * S
H = CLKX high pulse width = (CLKGDV/2 + 1) * S if CLKGDV is even
= (CLKGDV + 1)/2 * S if CLKGDV is odd or zero
L = CLKX low pulse width = (CLKGDV/2) * S if CLKGDV is even
= (CLKGDV + 1)/2 * S if CLKGDV is odd or zero
¶ FSRP = FSXP = 1. As a SPI Master, FSX is inverted to provide active-low slave-enable output. As a Slave, the active-low signal input on FSX and FSR is inverted before being used internally.
CLKXM = FSXM = 1, CLKRM = FSRM = 0 for Master McBSP
CLKXM = CLKRM = FSXM = FSRM = 0 for Slave McBSP
# FSX should be low before the rising edge of clock to enable Slave devices and then begin a SPI transfer at the rising edge of the Master clock (CLKX).

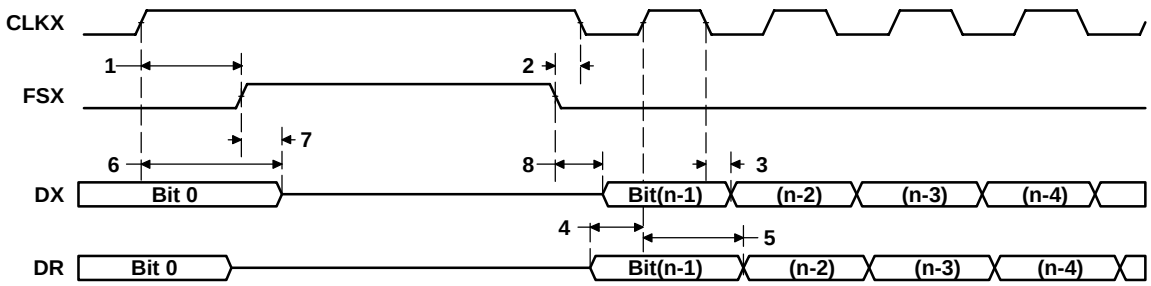

Figure 4−48. McBSP Timing as SPI Master or Slave: CLKSTP = 10b, CLKXP = 1

Table 4−52. Timing Requirements for McBSP as SPI Master or Slave: CLKSTP = 11b, CLKXP = 1†‡ (see Figure 4−49)

NO.			−400 −500 −600				UNIT
			MASTER		SLAVE		
			MIN	MAX	MIN	MAX	
4	$t_{su(DRV-CKXH)}$	Setup time, DR valid before CLKX high	12		2 − 12P		ns
5	$t_{h(CKXH-DRV)}$	Hold time, DR valid after CLKX high	4		5 + 24P		ns

† P = 1/CPU clock frequency in ns. For example, when running parts at 600 MHz, use P = 1.67 ns.
‡ For all SPI Slave modes, CLKG is programmed as 1/4 of the CPU clock by setting CLKSM = CLKGDV = 1.

Table 4−53. Switching Characteristics Over Recommended Operating Conditions for McBSP as SPI Master or Slave: CLKSTP = 11b, CLKXP = 1†‡ (see Figure 4−49)

NO.	PARAMETER		−400 −500 −600				UNIT
			MASTER§		SLAVE		
			MIN	MAX	MIN	MAX	
1	$t_{h(CKXH-FXL)}$	Hold time, FSX low after CLKX high¶	H − 2	H + 3			ns
2	$t_{d(FXL-CKXL)}$	Delay time, FSX low to CLKX low#	T − 2.5	T + 1.5			ns
3	$t_{d(CKXH-DXV)}$	Delay time, CLKX high to DX valid	−2	4	12P + 3	20P + 17	ns
6	$t_{dis(CKXH-DXHZ)}$	Disable time, DX high impedance following last data bit from CLKX high	−2	4	12P + 3	20P + 17	ns
7	$t_{d(FXL-DXV)}$	Delay time, FSX low to DX valid	L − 2	L + 4	8P + 2	16P + 17	ns

† P = 1/CPU clock frequency in ns. For example, when running parts at 600 MHz, use P = 1.67 ns.
‡ For all SPI Slave modes, CLKG is programmed as 1/4 of the CPU clock by setting CLKSM = CLKGDV = 1.
§ S = Sample rate generator input clock = 4P if CLKSM = 1 (P = 1/CPU clock frequency)
= Sample rate generator input clock = P_clks if CLKSM = 0 (P_clks = CLKS period)
T = CLKX period = (1 + CLKGDV) * S
H = CLKX high pulse width = (CLKGDV/2 + 1) * S if CLKGDV is even
= (CLKGDV + 1)/2 * S if CLKGDV is odd or zero
L = CLKX low pulse width = (CLKGDV/2) * S if CLKGDV is even
= (CLKGDV + 1)/2 * S if CLKGDV is odd or zero
¶ FSRP = FSXP = 1. As a SPI Master, FSX is inverted to provide active-low slave-enable output. As a Slave, the active-low signal input on FSX and FSR is inverted before being used internally.
CLKXM = FSXM = 1, CLKRM = FSRM = 0 for Master McBSP
CLKXM = CLKRM = FSXM = FSRM = 0 for Slave McBSP
# FSX should be low before the rising edge of clock to enable Slave devices and then begin a SPI transfer at the rising edge of the Master clock (CLKX).

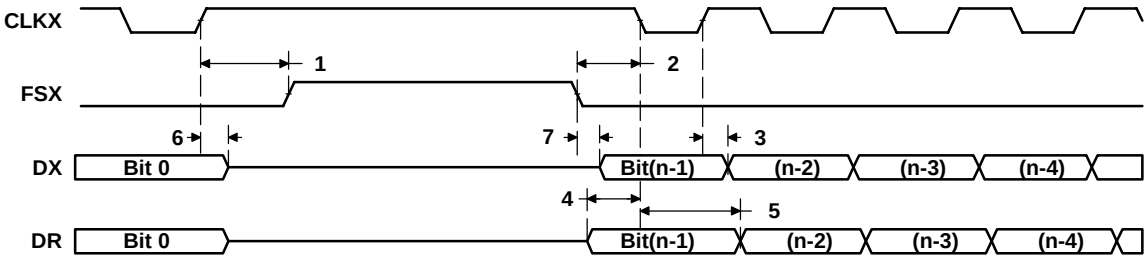

Figure 4−49. McBSP Timing as SPI Master or Slave: CLKSTP = 11b, CLKXP = 1

4.13 Video Port

Each Video Port is capable of sending and receiving digital video data. The Video Ports are also capable of capturing/displaying RAW data. The Video Port peripherals follow video standards such as CCIR601 and ITU-BT.656.

4.13.1 Video Port Device-Specific Information

The TMS320DM641 device has two video port peripherals [VP0 and VP1]. The TMS320DM640 device only supports one video port peripheral [VP0].

The video port peripheral can operate as a video capture port, video display port, or as a transport stream interface (TSI) capture port.

The port consists of a single channel A. A 2560-byte capture/display buffer is utilized on this channel. The port is always configured for either video capture or display only. Separate data pipelines control the parsing and formatting of video capture or display data for each of the BT.656, raw video, and TSI modes.

For video capture operation, the video port may operate as a single channel of 8-bit BT.656, 8-bit raw video, or 8-bit TSI.

For video display operation, the video port may operate as 8-bit BT.656 or 8-bit raw video.

For more detailed information on the DM641 and DM640 Video Port peripherals, see the *TMS320C64x DSP Video Port/VCXO Interpolated Control (VIC) Port Reference Guide* (literature number SPRU629).

4.13.2 Video Port Peripheral Register Description(s)

Table 4−54. Video Port 0 and 1 (VP0 and VP1) Control Registers

HEX ADDRESS RANGE		ACRONYM	DESCRIPTION
VP0	VP1 [DM641 ONLY]		
01C4 0000	01C4 4000	VP_PIDx	Video Port Peripheral Identification Register
01C4 0004	01C4 4004	VP_PCRx	Video Port Peripheral Control Register
01C4 0008	01C4 4008	−	Reserved
01C4 000C	01C4 400C	−	Reserved
01C4 0020	01C4 4020	VP_PFUNCx	Video Port Pin Function Register
01C4 0024	01C4 4024	VP_PDIRx	Video Port Pin Direction Register
01C4 0028	01C4 4028	VP_PDINx	Video Port Pin Data Input Register
01C4 002C	01C4 402C	VP_PDOUTx	Video Port Pin Data Output Register
01C4 0030	01C4 4030	VP_PDSETx	Video Port Pin Data Set Register
01C4 0034	01C4 4034	VP_PDCLRx	Video Port Pin Data Clear Register
01C4 0038	01C4 4038	VP_PIENx	Video Port Pin Interrupt Enable Register
01C4 003C	01C4 403C	VP_PIPOx	Video Port Pin Interrupt Polarity Register
01C4 0040	01C4 4040	VP_PISTATx	Video Port Pin Interrupt Status Register
01C4 0044	01C4 4044	VP_PICLRx	Video Port Pin Interrupt Clear Register
01C4 00C0	01C4 40C0	VP_CTLx	Video Port Control Register
01C4 00C4	01C4 40C4	VP_STATx	Video Port Status Register
01C4 00C8	01C4 40C8	VP_IEx	Video Port Interrupt Enable Register
01C4 00CC	01C4 40CC	VP_ISx	Video Port interrupt Status Register
01C4 0100	01C4 4100	VC_STATx	Video Capture Channel A Status Register

Table 4−54. Video Port 0 and 1 (VP0 and VP1) Control Registers (Continued)

HEX ADDRESS RANGE		ACRONYM	DESCRIPTION
VP0	VP1 [DM641 ONLY]		
01C4 0104	01C4 4104	VC_CTLx	Video Capture Channel A Control Register
01C4 0108	01C4 4108	VC_ASTRTx	Video Capture Channel A Field 1 Start Register
01C4 010C	01C4 410C	VC_ASTOPx	Video Capture Channel A Field 2 Stop Register
01C4 0110	01C4 4110	VC_ASTRTx	Video Capture Channel A Field 2 Start Register
01C4 0114	01C4 4114	VC_ASTOPx	Video Capture Channel A Field 1 Stop Register
01C4 0118	01C4 4118	VC_AVINTx	Video Capture Channel A Vertical Interrupt Register
01C4 011C	01C4 411C	VC_ATHRLDx	Video Capture Channel A Threshold Register
01C4 0120	01C4 4120	VC_AEVTCTx	Video Capture Channel A Event Count Register
01C4 0180	01C4 4180	TSI_CTLx	TCI Capture Control Register
01C4 0184	01C4 4184	TSI_CLKINITLx	TCI Clock Initialization LSB Register
01C4 0188	01C4 4188	TSI_CLKINITMx	TCI Clock Initialization MSB Register
01C4 018C	01C4 418C	TSI_STCLKLx	TCI System Time Clock LSB Register
01C4 0190	01C4 4190	TSI_STCLKMx	TCI System Time Clock MSB Register
01C4 0194	01C4 4194	TSI_STCMPLx	TCI System Time Clock Compare LSB Register
01C4 0198	01C4 4198	TSI_STCMPMx	TCI System Time Clock Compare MSB Register
01C4 019C	01C4 419C	TSI_STMSKLx	TCI System Time Clock Compare Mask LSB Register
01C4 01A0	01C4 41A0	TSI_STMSKMx	TCI System Time Clock Compare Mask MSB Register
01C4 01A4	01C4 41A4	TSI_TICKSx	TCI System Time Clock Ticks Interrupt Register
01C4 0200	01C4 4200	VD_STATx	Video Display Status Register
01C4 0204	01C4 4204	VD_CTLx	Video Display Control Register
01C4 0208	01C4 4208	VD_FRMSZx	Video Display Frame Size Register
01C4 020C	01C4 420C	VD_HBLNKx	Video Display Horizontal Blanking Register
01C4 0210	01C4 4210	VD_VBLKS1x	Video Display Field 1 Vertical Blanking Start Register
01C4 0214	01C4 4214	VD_VBLKE1x	Video Display Field 1 Vertical Blanking End Register
01C4 0218	01C4 4218	VD_VBLKS2x	Video Display Field 2 Vertical Blanking Start Register
01C4 021C	01C4 421C	VD_VBLKE2x	Video Display Field 2 Vertical Blanking End Register
01C4 0220	01C4 4220	VD_IMGOFF1x	Video Display Field 1 Image Offset Register
01C4 0224	01C4 4224	VD_IMGSZ1x	Video Display Field 1 Image Size Register
01C4 0228	01C4 4228	VD_IMGOFF2x	Video Display Field 2 Image Offset Register
01C4 022C	01C4 422C	VD_IMGSZ2x	Video Display Field 2 Image Size Register
01C4 0230	01C4 4230	VD_FLDT1x	Video Display Field 1 Timing Register
01C4 0234	01C4 4234	VD_FLDT2x	Video Display Field 2 Timing Register
01C4 0238	01C4 4238	VD_THRLDx	Video Display Threshold Register
01C4 023C	01C4 423C	VD_HSYNCx	Video Display Horizontal Synchronization Register
01C4 0240	01C4 4240	VD_VSYNS1x	Video Display Field 1 Vertical Synchronization Start Register
01C4 0244	01C4 4244	VD_VSYNE1x	Video Display Field 1 Vertical Synchronization End Register
01C4 0248	01C4 4248	VD_VSYNS2x	Video Display Field 2 Vertical Synchronization Start Register
01C4 024C	01C4 424C	VD_VSYNE2x	Video Display Field 2 Vertical Synchronization End Register
01C4 0250	01C4 4250	VD_RELOADx	Video Display Counter Reload Register
01C4 0254	01C4 4254	VD_DISPEVTx	Video Display Display Event Register

Table 4−54. Video Port 0 and 1 (VP0 and VP1) Control Registers (Continued)

HEX ADDRESS RANGE		ACRONYM	DESCRIPTION
VP0	VP1 [DM641 ONLY]		
01C4 0258	01C4 4258	VD_CLIPx	Video Display Clipping Register
01C4 025C	01C4 425C	VD_DEFVALx	Video Display Default Display Value Register
01C4 0260	01C4 4260	VD_VINTx	Video Display Vertical Interrupt Register
01C4 0264	01C4 4264	VD_FBITx	Video Display Field Bit Register
01C4 0268	01C4 4268	VD_VBIT1x	Video Display Field 1Vertical Blanking Bit Register
01C4 026C	01C4 426C	VD_VBIT2x	Video Display Field 2Vertical Blanking Bit Register
7400 000	7800 0000	Y_RSCA	Y FIFO Source Register A
7400 0008	7800 0008	CB_SRCA	CB FIFO Source Register A
7400 0010	7800 0010	CR_SRCA	CR FIFO Source Register A
7400 0020	7800 0020	Y_DSTA	Y FIFO Destination Register A
7400 0028	7800 0028	CB_DST	CB FIFO Destination Register A
7400 0030	7800 0030	CR_DST	CR FIFO Destination Register A

4.13.3 Video Port (VP0 [DM641/DM640], VP1 [DM641 Only]) Electrical Data/Timing

4.13.3.1 VCLKIN Timing (Video Capture Mode)

Table 4−55. Timing Requirements for Video Capture Mode for VPxCLKINx† (see Figure 4−50)

NO.			−400 −500 −600		UNIT
			MIN	MAX	
1	$t_{c(VKI)}$	Cycle time, VPxCLKINx	12.5		ns
2	$t_{w(VKIH)}$	Pulse duration, VPxCLKINx high	5.4		ns
3	$t_{w(VKIL)}$	Pulse duration, VPxCLKINx low	5.4		ns
4	$t_{t(VKI)}$	Transition time, VPxCLKINx		3	ns

† The reference points for the rise and fall transitions are measured at V_{IL} MAX and V_{IH} MIN.

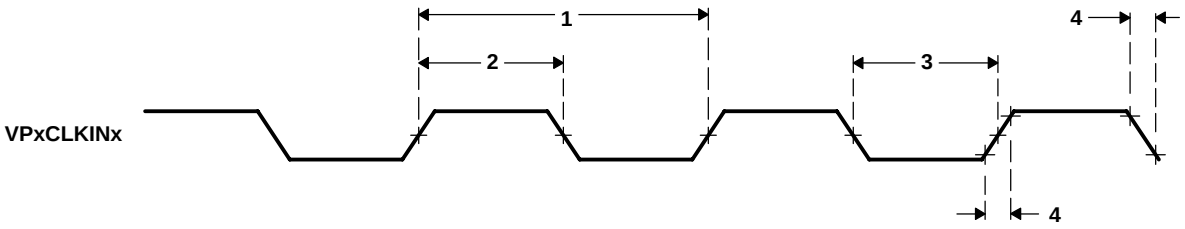

Figure 4−50. Video Port Capture VPxCLKINx TIming

4.13.3.2 Video Data and Control Timing (Video Capture Mode)

Table 4−56. Timing Requirements in Video Capture Mode for Video Data and Control Inputs (see Figure 4−51)

NO.			−400 −500 −600		UNIT
			MIN	MAX	
1	$t_{su(VDATV-VKIH)}$	Setup time, VPxDx valid before VPxCLKINx high	2.9		ns
2	$t_{h(VDATV-VKIH)}$	Hold time, VPxDx valid after VPxCLKINx high	0.5		ns
3	$t_{su(VCTLV-VKIH)}$	Setup time, VPxCTLx valid before VPxCLKINx high	2.9		ns
4	$t_{h(VCTLV-VKIH)}$	Hold time, VPxCTLx valid after VPxCLKINx high	0.5		ns

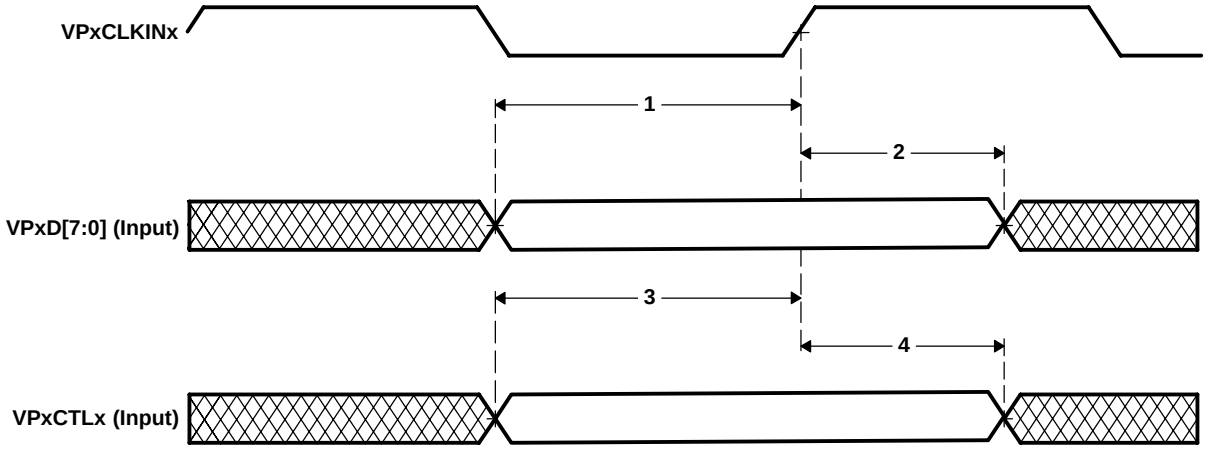

Figure 4−51. Video Port Capture Data and Control Input Timing

4.13.3.3 VCLKIN Timing (Video Display Mode)

Table 4−57. Timing Requirements for Video Display Mode for VPxCLKINx† (see Figure 4−52)

NO.			−400 −500 −600		UNIT
			MIN	MAX	
1	$t_{c(VKI)}$	Cycle time, VPxCLKINx	9		ns
2	$t_{w(VKIH)}$	Pulse duration, VPxCLKINx high	4.1		ns
3	$t_{w(VKIL)}$	Pulse duration, VPxCLKINx low	4.1		ns
4	$t_{t(VKI)}$	Transition time, VPxCLKINx		3	ns

† The reference points for the rise and fall transitions are measured at V_{IL} MAX and V_{IH} MIN.

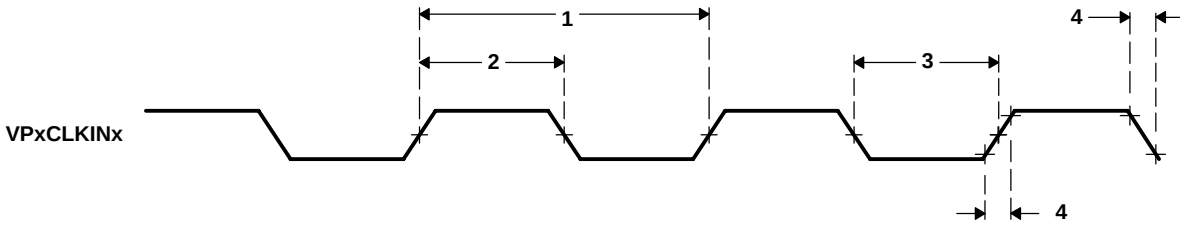

Figure 4−52. Video Port Display VPxCLKINx Timing

4.13.3.4 Video Control Input/Output and Video Display Data Output Timing With Respect to VPxCLKINx and VPxCLKOUTx (Video Display Mode)

Table 4−58. Timing Requirements in Video Display Mode for Video Control Input Shown With Respect to VPxCLKINx and VPxCLKOUTx (see Figure 4−53)

NO.			−400 −500 −600		UNIT
			MIN	MAX	
13	$t_{su(VCTLV-VKIH)}$	Setup time, VPxCTLx valid before VPxCLKINx high	2.9		ns
14	$t_{h(VCTLV-VKIH)}$	Hold time, VPxCTLx valid after VPxCLKINx high	0.5		ns
15	$t_{su(VCTLV-VKOH)}$	Setup time, VPxCTLx valid before VPxCLKOUTx high‡	7.4		ns
16	$t_{h(VCTLV-VKOH)}$	Hold time, VPxCTLx valid after VPxCLKOUTx high‡	−0.9		ns

‡ Assuming non-inverted VPxCLKOUTx signal.

Table 4−59. Switching Characteristics Over Recommended Operating Conditions in Video Display Mode for Video Data and Control Output Shown With Respect to VPxCLKINx and VPxCLKOUTx[†‡] (see Figure 4−53)

NO.	PARAMETER		−400 −500 −600		UNIT
			MIN	MAX	
1	$t_{c(VKO)}$	Cycle time, VPxCLKOUTx	V − 0.7	V + 0.7	ns
2	$t_{w(VKOH)}$	Pulse duration, VPxCLKOUTx high	VH − 0.7	VH + 0.7	ns
3	$t_{w(VKOL)}$	Pulse duration, VPxCLKOUTx low	VL − 0.7	VL + 0.7	ns
4	$t_{t(VKO)}$	Transition time, VPxCLKOUTx		1.8	ns
5	$t_{d(VKIH-VKOH)}$	Delay time, VPxCLKINx high to VPxCLKOUTx high[§]	1.1	5.7	ns
6	$t_{d(VKIL-VKOL)}$	Delay time, VPxCLKINx low to VPxCLKOUTx low[§]	1.1	5.7	ns
7	$t_{d(VKIH-VKOL)}$	Delay time, VPxCLKINx high to VPxCLKOUTx low	1.1	5.7	ns
8	$t_{d(VKIL-VKOH)}$	Delay time, VPxCLKINx low to VPxCLKOUTx high	1.1	5.7	ns
9	$t_{d(VKIH-VPOUTV)}$	Delay time, VPxCLKINx high to VPxOUT valid[¶]		9	ns
10	$t_{d(VKIH-VPOUTIV)}$	Delay time, VPxCLKINx high to VPxOUT invalid[¶]	1.7		ns
11	$t_{d(VKOH-VPOUTV)}$	Delay time, VPxCLKOUTx high to VPxOUT valid[†¶]		4.3	ns
12	$t_{d(VKOH-VPOUTIV)}$	Delay time, VPxCLKOUTx high to VPxOUT invalid[†¶]	−0.2		ns

[†] V = the video input clock (VPxCLKINx) period in ns.
[‡] VH is the high period of V (video input clock period) in ns and VL is the low period of V (video input clock period) in ns.
[§] Assuming non-inverted VPxCLKOUTx signal.
[¶] VPxOUT consists of VPxCTLx and VPxD[7:0]

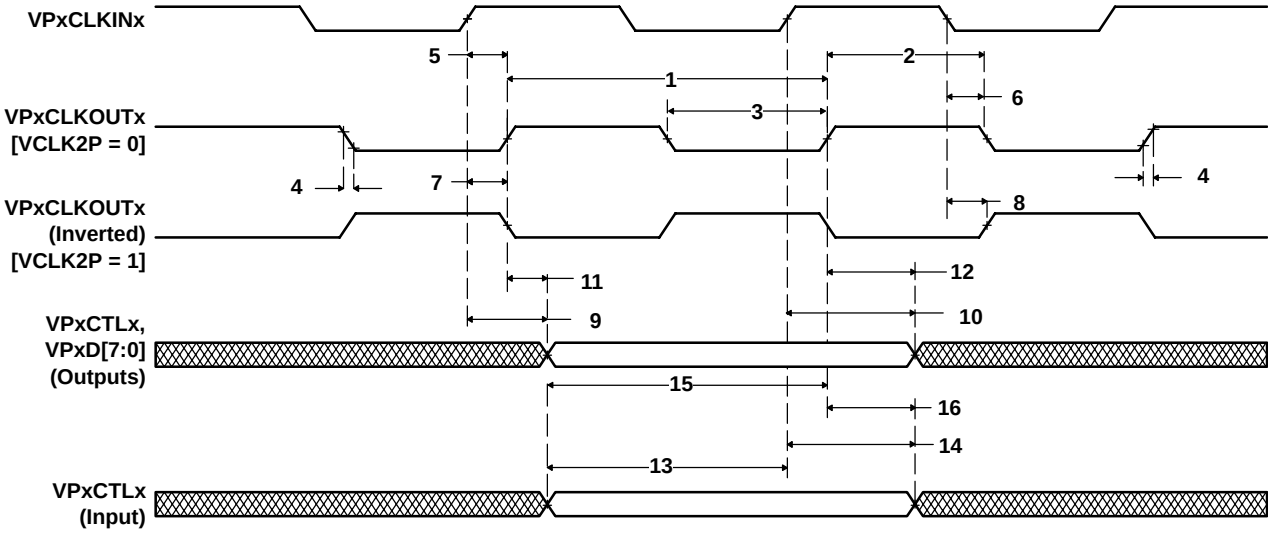

Figure 4−53. Video Port Display Data Output Timing and Control Input/Output Timing With Respect to VPxCLKINx and VPxCLKOUTx

4.13.3.5 Video Dual-Display Sync Mode Timing (With Respect to VPxCLKINx)

Table 4−60. Timing Requirements for Dual-Display Sync Mode for VPxCLKINx (see Figure 4−54)

NO.			−400 −500 −600		UNIT
			MIN	MAX	
1	$t_{skr(VKI)}$	Skew rate, VPxCLKINx before VPyCLKINy		±500	ps

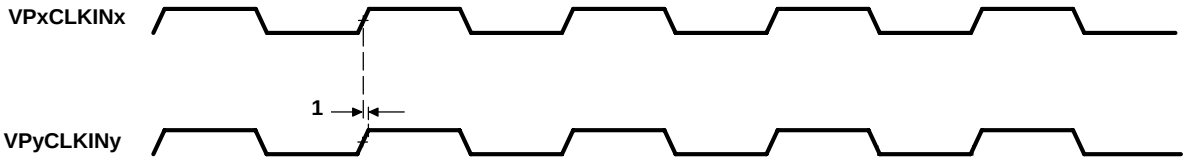

Figure 4−54. Video Port Dual-Display Sync Timing

4.14 VCXO Interpolated Control (VIC)

The VIC can be used in conjunction with the Video Ports (VPs) to maintain synchronization of a video stream. The VIC can also be used to control a VCXO to adjust the pixel clock rate to a video port.

4.14.1 VIC Device-Specific Information

The VCXO interpolated control (VIC) port provides digital-to-analog conversation with resolution from 9-bits to up to 16-bits. The output of the VIC is a single bit interpolated D/A output (VDAC pin).

Typical D/A converters provide a discrete output level for every value of the digital word that is being converted. This is a problem for digital words that are long. This is avoided in a Sigma Delta type D/A converter by choosing a few widely spaced output levels and interpolating values between them. The interpolating mechanism causes the output to oscillate rapidly between the levels in such a manner that the average output represents the value of input code.

In the VIC, two output levels are chosen (0 and 1), and Sigma Delta interpolation scheme is implemented to interpolate between these levels with a rapidly changing signal. The frequency of interpolation is dependent on the resolution needed.

When the video port is used in transport stream interface (TSI) mode, the VIC port is used to control the system clock, VCXO, for MPEG transport stream.

The VIC supports the following features:

- Single interpolation for D/A conversion
- Programmable precision from 9-to-16 bits
- Interface for register accesses

For more detailed information on the DM641 and DM640 VCXO interpolated control (VIC) peripheral, see the *TMS320C64x DSP Video Port/VCXO Interpolated Control (VIC) Port Reference Guide* (literature number SPRU629).

4.14.2 VIC Peripheral Register Description(s)

Table 4−61. VCXO Interpolated Control (VIC) Port Registers

HEX ADDRESS RANGE	ACRONYM	REGISTER NAME
01C4 C000	VICCTL	VIC control register
01C4 C004	VICIN	VIC input register
01C4 C008	VPDIV	VIC clock divider register
01C4 C00C − 01C4 FFFF	−	Reserved

4.14.3 VIC Electrical Data/Timing

4.14.3.1 STCLK Timing

Table 4−62. Timing Requirments for STCLK† (see Figure 4−55)

NO.			−400 −500 −600		UNIT
			MIN	MAX	
1	$t_{c(STCLK)}$	Cycle time, STCLK	33.3		ns
2	$t_{w(STCLKH)}$	Pulse duration, STCLK high	16		ns
3	$t_{w(STCLKL)}$	Pulse duration, STCLK low	16		ns
4	$t_{t(STCLK)}$	Transition time, STCLK		3	ns

† The reference points for the rise and fall transitions are measured at V_{IL} MAX and V_{IH} MIN.

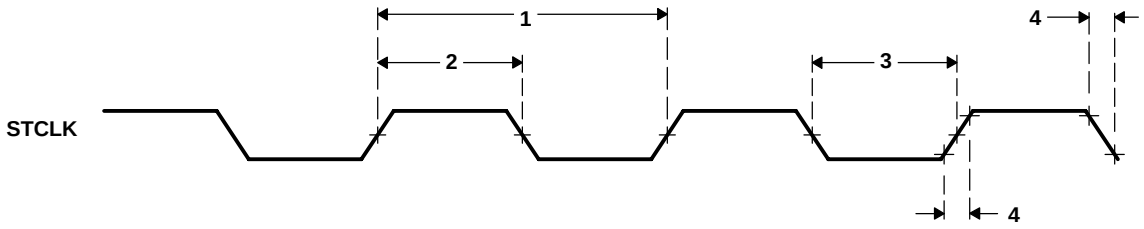

Figure 4−55. STCLK Timing

4.15 Ethernet Media Access Controller (EMAC)

The EMAC controls the flow of packet data from the DSP to the PHY.

4.15.1 EMAC Device-Specific Information

The ethernet media access controller (EMAC) provides an efficient interface between the DM641/DM640 DSP core processor and the network. The DM641/DM640 EMAC support both 10Base-T and 100Base-TX, or 10 Mbits/second (Mbps) and 100 Mbps in either half- or full-duplex, with hardware flow control and quality of service (QOS) support. The DM641/DM640 EMAC makes use of a custom interface to the DSP core that allows efficient data transmission and reception.

The EMAC controls the flow of packet data from the DSP to the PHY. The MDIO module controls PHY configuration and status monitoring.

Both the EMAC and the MDIO modules interface to the DSP through a custom interface that allows efficient data transmission and reception. This custom interface is referred to as the EMAC control module, and is considered integral to the EMAC/MDIO peripheral. The control module is also used to control device reset, interrupts, and system priority.

The *TMS320C6000 DSP Ethernet Media Access Controller (EMAC) / Management Data Input/Output (MDIO) Module Reference Guide* (literature number SPRU628) describes the DM641/DM640 EMAC peripheral in detail. Some of the features documented in this peripheral reference guide are not supported on the DM641/DM640 at this time. The DM641/DM640 supports one receive channel and does not support receive quality of service (QOS). For a list of supported registers and register fields, see Table 4−63 [Ethernet MAC (EMAC) Control Registers] and Table 4−64 [EMAC Statistics Registers] in this data manual.

4.15.2 EMAC Peripheral Register Description(s)

Table 4−63. Ethernet MAC (EMAC) Control Registers

HEX ADDRESS RANGE	ACRONYM	REGISTER NAME
01C8 0000	TXIDVER	Transmit Identification and Version Register
01C8 0004	TXCONTROL	Transmit Control Register
01C8 0008	TXTEARDOWN	Transmit Teardown Register
01C8 000C	−	Reserved
01C8 0010	RXIDVER	Receive Identification and Version Register
01C8 0014	RXCONTROL	Receive Control Register
01C8 0018	RXTEARDOWN	Receive Teardown Register (RXTDNCH field only supports writes of 0.)
01C8 001C − 01C8 00FF	−	Reserved
01C8 0100	RXMBPENABLE	Receive Multicast/Broadcast/Promiscuous Channel Enable Register (The RXQOSEN field is reserved and only supports writes of 0. The PROMCH, BROADCH, and MUCTCH bit fields only support writes of 0.)
01C8 0104	RXUNICASTSET	Receive Unicast Set Register (Bits 7−1 are reserved and only support writes of 0.)
01C8 0108	RXUNICASTCLEAR	Receive Unicast Clear Register (Bits 7−1 are reserved and only support writes of 0.)
01C8 010C	RXMAXLEN	Receive Maximum Length Register
01C8 0110	RXBUFFEROFFSET	Receive Buffer Offset Register
01C8 0114	RXFILTERLOWTHRESH	Receive Filter Low Priority Packets Threshold Register
01C8 0118 − 01C8 011F	−	Reserved
01C8 0120	RX0FLOWTHRESH	Receive Channel 0 Flow Control Threshold Register

Table 4−63. Ethernet MAC (EMAC) Control Registers (Continued)

HEX ADDRESS RANGE	ACRONYM	REGISTER NAME
01C8 0124	RX1FLOWTHRESH	Reserved. Do not write.
01C8 0128	RX2FLOWTHRESH	
01C8 012C	RX3FLOWTHRESH	
01C8 0130	RX4FLOWTHRESH	
01C8 0134	RX5FLOWTHRESH	
01C8 0138	RX6FLOWTHRESH	
01C8 013C	RX7FLOWTHRESH	
01C8 0140	RX0FREEBUFFER	Receive Channel 0 Free Buffer Count Register
01C8 0144	RX1FREEBUFFER	Reserved. Do not write.
01C8 0148	RX2FREEBUFFER	
01C8 014C	RX3FREEBUFFER	
01C8 0150	RX4FREEBUFFER	
01C8 0154	RX5FREEBUFFER	
01C8 0158	RX6FREEBUFFER	
01C8 015C	RX7FREEBUFFER	
01C8 0160	MACCONTROL	MAC Control Register
01C8 0164	MACSTATUS	MAC Status Register (RXQOSACT field is reserved.)
01C8 0168 − 01C8 016C	−	Reserved
01C8 0170	TXINTSTATRAW	Transmit Interrupt Status (Unmasked) Register
01C8 0174	TXINTSTATMASKED	Transmit Interrupt Status (Masked) Register
01C8 0178	TXINTMASKSET	Transmit Interrupt Mask Set Register
01C8 017C	TXINTMASKCLEAR	Transmit Interrupt Mask Clear Register
01C8 0180	MACINVECTOR	MAC Input Vector Register
01C8 0184 − 01C8 018F	−	Reserved
01C8 0190	RXINTSTATRAW	Receive Interrupt Status (Unmasked) Register (Bits 7−1 are reserved.)
01C8 0194	RXINTSTATMASKED	Receive Interrupt Status (Masked) Register (Bits 7−1 are reserved.)
01C8 0198	RXINTMASKSET	Receive Interrupt Mask Set Register (Bits 7−1 are reserved and only support writes of 0.)
01C8 019C	RXINTMASKCLEAR	Receive Interrupt Mask Clear Register (Bits 7−1 are reserved and only support writes of 0.)
01C8 01A0	MACINTSTATRAW	MAC Interrupt Status (Unmasked) Register
01C8 01A4	MACINTSTATMASKED	MAC Interrupt Status (Masked) Register
01C8 01A8	MACINTMASKSET	MAC Interrupt Mask Set Register
01C8 01AC	MACINTMASKCLEAR	MAC Interrupt Mask Clear Register
01C8 01B0	MACADDRL0	MAC Address Channel 0 Lower Byte Register
01C8 01B4	MACADDRL1	Reserved. Do not write.
01C8 01B8	MACADDRL2	
01C8 01BC	MACADDRL3	
01C8 01C0	MACADDRL4	
01C8 01C4	MACADDRL5	
01C8 01C8	MACADDRL6	
01C8 01CC	MACADDRL7	
01C8 01D0	MACADDRM	MAC Address Middle Byte Register

Table 4−63. Ethernet MAC (EMAC) Control Registers (Continued)

HEX ADDRESS RANGE	ACRONYM	REGISTER NAME
01C8 01D4	MACADDRH	MAC Address High Bytes Register
01C8 01D8	MACHASH1	MAC Address Hash 1 Register
01C8 01DC	MACHASH2	MAC Address Hash 2 Register
01C8 01E0	BOFFTEST	Backoff Test Register
01C8 01E4	TPACETEST	Transmit Pacing Test Register
01C8 01E8	RXPAUSE	Receive Pause Timer Register
01C8 01EC	TXPAUSE	Transmit Pause Timer Register
01C8 01F0 − 01C8 01FF	−	Reserved
01C8 0200 − 01C8 05FF	(see Table 4−64)	EMAC Statistics Registers
01C8 0600	TX0HDP	Transmit Channel 0 DMA Head Descriptor Pointer Register
01C8 0604	TX1HDP	Transmit Channel 1 DMA Head Descriptor Pointer Register
01C8 0608	TX2HDP	Transmit Channel 2 DMA Head Descriptor Pointer Register
01C8 060C	TX3HDP	Transmit Channel 3 DMA Head Descriptor Pointer Register
01C8 0610	TX4HDP	Transmit Channel 4 DMA Head Descriptor Pointer Register
01C8 0614	TX5HDP	Transmit Channel 5 DMA Head Descriptor Pointer Register
01C8 0618	TX6HDP	Transmit Channel 6 DMA Head Descriptor Pointer Register
01C8 061C	TX7HDP	Transmit Channel 7 DMA Head Descriptor Pointer Register
01C8 0620	RX0HDP	Receive Channel 0 DMA Head Descriptor Pointer Register
01C8 0624	RX1HDP	Reserved. Do not write.
01C8 0628	RX2HDP	
01C8 062C	RX3HDP	
01C8 0630	RX4HDP	
01C8 0634	RX5HDP	
01C8 0638	RX6HDP	
01C8 063C	RX7HDP	
01C8 0640	TX0INTACK	Transmit Channel 0 Interrupt Acknowledge Register
01C8 0644	TX1INTACK	Transmit Channel 1 Interrupt Acknowledge Register
01C8 0648	TX2INTACK	Transmit Channel 2 Interrupt Acknowledge Register
01C8 064C	TX3INTACK	Transmit Channel 3 Interrupt Acknowledge Register
01C8 0650	TX4INTACK	Transmit Channel 4 Interrupt Acknowledge Register
01C8 0654	TX5INTACK	Transmit Channel 5 Interrupt Acknowledge Register
01C8 0658	TX6INTACK	Transmit Channel 6 Interrupt Acknowledge Register
01C8 065C	TX7INTACK	Transmit Channel 7 Interrupt Acknowledge Register
01C8 0660	RX0INTACK	Receive Channel 0 Interrupt Acknowledge Register
01C8 0664	RX1INTACK	Reserved. Do not write.
01C8 0668	RX2INTACK	
01C8 066C	RX3INTACK	
01C8 0670	RX4INTACK	
01C8 0674	RX5INTACK	
01C8 0678	RX6INTACK	
01C8 067C	RX7INTACK	
01C8 0680 − 01C8 0FFF	−	Reserved

Table 4−64. EMAC Statistics Registers

HEX ADDRESS RANGE	ACRONYM	REGISTER NAME	
01C8 0200	RXGOODFRAMES	Good Receive Frames Register	
01C8 0204	RXBCASTFRAMES	Broadcast Receive Frames Register	
01C8 0208	RXMCASTFRAMES	Multicast Receive Frames Register	
01C8 020C	RXPAUSEFRAMES	Pause Receive Frames Register	
01C8 0210	RXCRCERRORS	Receive CRC Errors Register	
01C8 0214	RXALIGNCODEERRORS	Receive Alignment/Code Errors Register	
01C8 0218	RXOVERSIZED	Receive Oversized Frames Register	
01C8 021C	RXJABBER	Receive Jabber Frames Register	
01C8 0220	RXUNDERSIZED	Receive Undersized Frames Register	
01C8 0224	RXFRAGMENTS	Receive Frame Fragments Register	
01C8 0228	RXFILTERED	Filtered Receive Frames Register	
01C8 022C	RXQOSFILTERED	Reserved	
01C8 0230	RXOCTETS	Receive Octet Frames Register	
01C8 0234	TXGOODFRAMES	Good Transmit Frames Register	
01C8 0238	TXBCASTFRAMES	Broadcast Transmit Frames Register	
01C8 023C	TXMCASTFRAMES	Multicast Transmit Frames Register	
01C8 0240	TXPAUSEFRAMES	Pause Transmit Frames Register	
01C8 0244	TXDEFERRED	Deferred Transmit Frames Register	
01C8 0248	TXCOLLISION	Collision Register	
01C8 024C	TXSINGLECOLL	Single Collision Transmit Frames Register	
01C8 0250	TXMULTICOLL	Multiple Collision Transmit Frames Register	
01C8 0254	TXEXCESSIVECOLL	Excessive Collisions Register	
01C8 0258	TXLATECOLL	Late Collisions Register	
01C8 025C	TXUNDERRUN	Transmit Underrun Register	
01C8 0260	TXCARRIERSLOSS	Transmit Carrier Sense Errors Register	
01C8 0264	TXOCTETS	Transmit Octet Frames Register	
01C8 0268	FRAME64	Transmit and Receive 64 Octet Frames Register	
01C8 026C	FRAME65T127	Transmit and Receive 65 to 127 Octet Frames Register	
01C8 0270	FRAME128T255	Transmit and Receive 128 to 255 Octet Frames Register	
01C8 0274	FRAME256T511	Transmit and Receive 256 to 511 Octet Frames Register	
01C8 0278	FRAME512T1023	Transmit and Receive 512 to 1023 Octet Frames Register	
01C8 027C	FRAME1024TUP	Transmit and Receive 1024 or Above Octet Frames Register	
01C8 0280	NETOCTETS	Network Octet Frames Register	
01C8 0284	RXSOFOVERRUNS	Receive Start of Frame Overruns Register	
01C8 0288	RXMOFOVERRUNS	Receive Middle of Frame Overruns Register	
01C8 028C	RXDMAOVERRUNS	Receive DMA Overruns Register	
01C8 0290 − 01C8 05FF	−	Reserved	

Table 4−65. EMAC Wrapper

HEX ADDRESS RANGE	ACRONYM	REGISTER NAME
01C8 1000 − 01C8 1FFF		EMAC Control Module Descriptor Memory
01C8 2000 − 01C8 2FFF	−	Reserved

Table 4−66. EWRAP Registers

HEX ADDRESS RANGE	ACRONYM	REGISTER NAME
01C8 3000	EWTRCTRL	TR control
01C8 3004	EWCTL	Interrupt control register
01C8 3008	EWINTTCNT	Interrupt timer count
01C8 300C − 01C8 37FF	−	Reserved

4.15.3 EMAC Electrical Data/Timing

Table 4−67. Timing Requirements for MRCLK (see Figure 4−56)

NO.			−400 −500 −600		UNIT
			MIN	MAX	
1	$t_{c(MRCLK)}$	Cycle time, MRCLK	40		ns
2	$t_{w(MRCLKH)}$	Pulse duration, MRCLK high	14		ns
3	$t_{w(MRCLKL)}$	Pulse duration, MRCLK low	14		ns

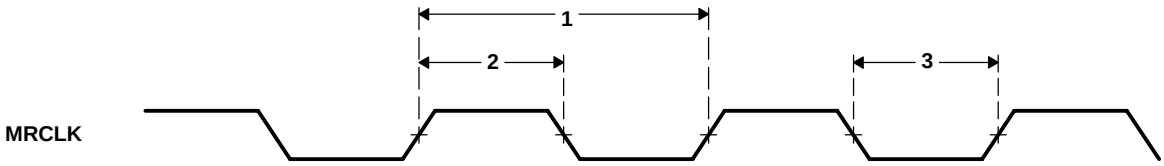

Figure 4−56. MRCLK Timing (EMAC − Receive)

Table 4−68. Timing Requirements for MTCLK (see Figure 4−56)

NO.			−400 −500 −600		UNIT
			MIN	MAX	
1	$t_{c(MTCLK)}$	Cycle time, MTCLK	40		ns
2	$t_{w(MTCLKH)}$	Pulse duration, MTCLK high	14		ns
3	$t_{w(MTCLKL)}$	Pulse duration, MTCLK low	14		ns

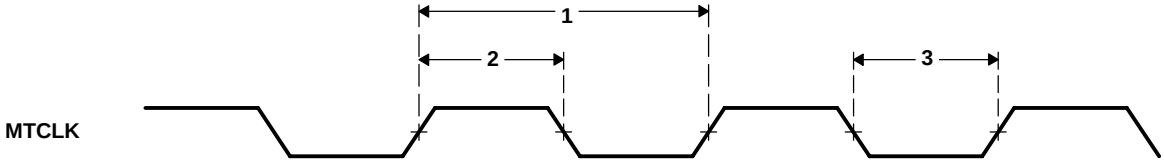

Figure 4−57. MTCLK Timing (EMAC − Transmit)

Table 4−69. Timing Requirements for EMAC MII Receive 10/100 Mbit/s† (see Figure 4−58)

NO.			−400 −500 −600		UNIT
			MIN	MAX	
1	$t_{su(MRXD-MRCLKH)}$	Setup time, receive selected signals valid before MRCLK high	8		ns
2	$t_{h(MRCLKH-MRXD)}$	Hold time, receive selected signals valid after MRCLK high	8		ns

† Receive selected signals include: MRXD3−MRXD0, MRXDV, and MRXER.

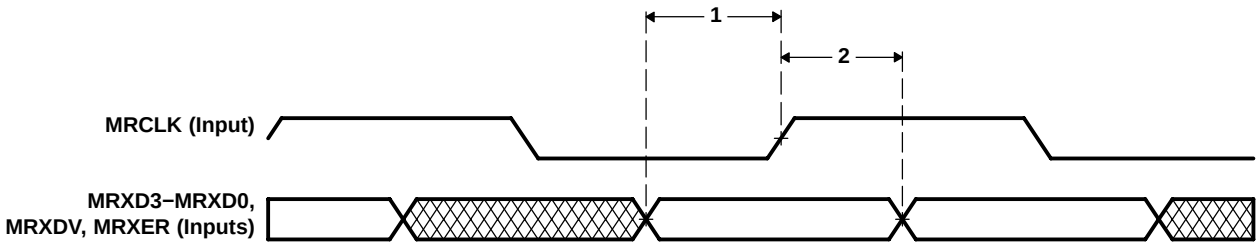

Figure 4−58. EMAC Receive Interface Timing

Table 4−70. Switching Characteristics Over Recommended Operating Conditions for EMAC MII Transmit 10/100 Mbit/s‡ (see Figure 4−59)

NO.			−400 −500 −600		UNIT
			MIN	MAX	
1	$t_{d(MTCLKH-MTXD)}$	Delay time, MTCLK high to transmit selected signals valid	5	25	ns

‡ Transmit selected signals include: MTXD3−MTXD0, and MTXEN.

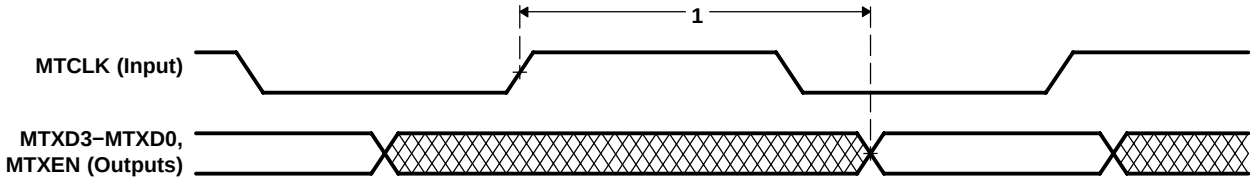

Figure 4−59. EMAC Transmit Interface Timing

4.16 Management Data Input/Output (MDIO)

The MDIO module controls PHY configuration and status monitoring.

4.16.1 Device-Specific Information

The management data input/output (MDIO) module continuously polls all 32 MDIO addresses in order to enumerate all PHY devices in the system.

The management data input/output (MDIO) module implements the 802.3 serial management interface to interrogate and control Ethernet PHY(s) using a shared two-wire bus. Host software uses the MDIO module to configure the auto-negotiation parameters of each PHY attached to the EMAC, retrieve the negotiation results, and configure required parameters in the EMAC module for correct operation. The module is designed to allow almost transparent operation of the MDIO interface, with very little maintenance from the core processor.

The *TMS320C6000 DSP Ethernet Media Access Controller (EMAC) / Management Data Input/Output (MDIO) Module Reference Guide* (literature number SPRU628) describes the DM641/DM640 MDIO peripheral in detail. Some of the features documented in this peripheral reference guide are not supported on the DM641/DM640 at this time. The DM641/DM640 only supports one EMAC module. For a list of supported registers and register fields, see Table 4−71 [MDIO Registers] in this data manual.

4.16.2 Peripheral Register Description(s)

Table 4−71. MDIO Registers

HEX ADDRESS RANGE	ACRONYM	REGISTER NAME
01C8 3800	VERSION	MDIO Version Register
01C8 3804	CONTROL	MDIO Control Register
01C8 3808	ALIVE	MDIO PHY Alive Indication Register
01C8 380C	LINK	MDIO PHY Link Status Register
01C8 3810	LINKINTRAW	MDIO Link Status Change Interrupt Register (MAC1 field is reserved and only supports writes of 0.)
01C8 3814	LINKINTMASKED	MDIO Link Status Change Interrupt (Masked) Register (MAC1 field is reserved and only supports writes of 0.)
01C8 3818	USERINTRAW	MDIO User Command Complete Interrupt Register (MAC1 field is reserved and only supports writes of 0.)
01C8 381C	USERINTMASKED	MDIO User Command Complete Interrupt (Masked) Register (MAC1 field is reserved and only supports writes of 0.)
01C8 3820	USERINTMASKSET	MDIO User Command Complete Interrupt Mask Set Register (MAC1 field is reserved and only supports writes of 0.)
01C8 3824	USERINTMASKCLEAR	MDIO User Command Complete Interrupt Mask Clear Register (MAC1 field is reserved and only supports writes of 0.)
01C8 3828	USERACCESS0	MDIO User Access Register 0
01C8 382C	USERACCESS1	Reserved. Do not write.
01C8 3830	USERPHYSEL0	MDIO User PHY Select Register 0
01C8 3834	USERPHYSEL1	Reserved. Do not write.
01C8 3838 − 01C8 3FFF	−	Reserved

4.16.3 Management Data Input/Output (MDIO) Electrical Data/Timing

Table 4−72. Timing Requirements for MDIO Input (see Figure 4−60 and Figure 4−61)

NO.			−400 −500 −600		UNIT
			MIN	MAX	
1	$t_{c(MDCLK)}$	Cycle time, MDCLK	400		ns
2	$t_{w(MDCLK)}$	Pulse duration, MDCLK high/low	180		ns
3	$t_{su(MDIO-MDCLKH)}$	Setup time, MDIO data input valid before MDCLK high	10		ns
4	$t_{h(MDCLKH-MDIO)}$	Hold time, MDIO data input valid after MDCLK high	0		ns

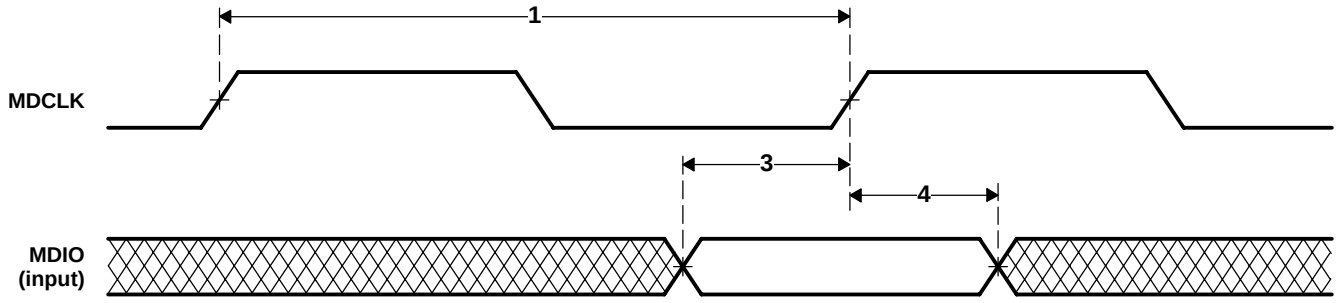

Figure 4−60. MDIO Input Timing

Table 4−73. Switching Characteristics Over Recommended Operating Conditions for MDIO Output (see Figure 4−61)

NO.			−400 −500 −600		UNIT
			MIN	MAX	
7	$t_{d(MDCLKL-MDIO)}$	Delay time, MDCLK low to MDIO data output valid	−10	100	ns

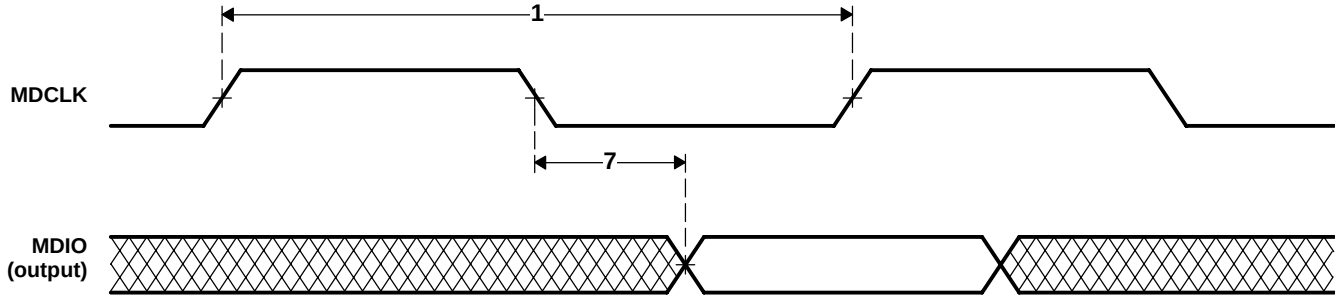

Figure 4−61. MDIO Output Timing

4.17 Timer

The C6000™ DSP device has 32-bit general-purpose timers that can be used to:

- Time events
- Count events
- Generate pulses
- Interrupt the CPU
- Send synchronization events to the DMA

The timers have two signaling modes and can be clocked by an internal or an external source. The timers have an input pin and an output pin. The input and output pins (TINP and TOUT) can function as timer clock input and clock output. They can also be respectively configured for general-purpose input and output.

With an internal clock, for example, the timer can signal an external A/D converter to start a conversion, or it can trigger the DMA controller to begin a data transfer. With an external clock, the timer can count external events and interrupt the CPU after a specified number of events.

4.17.1 Timer Device-Specific Information

The DM641/DM640 device has a total of three 32-bit general-purpose timers (Timer0, Timer1, and Timer2). Timer2 is ***not*** externally pinned out.

For more detailed information, see the *TMS320C6000 DSP 32-Bit Timer Reference Guide* (literature number SPRU582).

4.17.2 Timer Peripheral Register Description(s)

Table 4−74. Timer 0 Registers

HEX ADDRESS RANGE	ACRONYM	REGISTER NAME	COMMENTS
0194 0000	CTL0	Timer 0 control register	Determines the operating mode of the timer, monitors the timer status, and controls the function of the TOUT pin.
0194 0004	PRD0	Timer 0 period register	Contains the number of timer input clock cycles to count. This number controls the TSTAT signal frequency.
0194 0008	CNT0	Timer 0 counter register	Contains the current value of the incrementing counter.
0194 000C − 0197 FFFF	−	Reserved	

Table 4−75. Timer 1 Registers

HEX ADDRESS RANGE	ACRONYM	REGISTER NAME	COMMENTS
0198 0000	CTL1	Timer 1 control register	Determines the operating mode of the timer, monitors the timer status, and controls the function of the TOUT pin.
0198 0004	PRD1	Timer 1 period register	Contains the number of timer input clock cycles to count. This number controls the TSTAT signal frequency.
0198 0008	CNT1	Timer 1 counter register	Contains the current value of the incrementing counter.
0198 000C − 019B FFFF	−	Reserved	

Table 4−76. Timer 2 Registers

HEX ADDRESS RANGE	ACRONYM	REGISTER NAME	COMMENTS
01AC 0000	CTL2	Timer 2 control register	Determines the operating mode of the timer, monitors the timer status.
01AC 0004	PRD2	Timer 2 period register	Contains the number of timer input clock cycles to count. This number controls the TSTAT signal frequency.
01AC 0008	CNT2	Timer 2 counter register	Contains the current value of the incrementing counter.
01AC 000C − 01AF FFFF	−	Reserved	

4.17.3 Timer Electrical Data/Timing

Table 4−77. Timing Requirements for Timer Inputs† (see Figure 4−62)

NO.			−400 −500 −600		UNIT
			MIN	MAX	
1	$t_{w(TINPH)}$	Pulse duration, TINP high	8P		ns
2	$t_{w(TINPL)}$	Pulse duration, TINP low	8P		ns

† P = 1/CPU clock frequency in ns. For example, when running parts at 600 MHz, use P = 1.67 ns.

Table 4−78. Switching Characteristics Over Recommended Operating Conditions for Timer Outputs† (see Figure 4−62)

NO.	PARAMETER		−400 −500 −600		UNIT
			MIN	MAX	
3	$t_{w(TOUTH)}$	Pulse duration, TOUT high	8P−3		ns
4	$t_{w(TOUTL)}$	Pulse duration, TOUT low	8P−3		ns

† P = 1/CPU clock frequency in ns. For example, when running parts at 600 MHz, use P = 1.67 ns.

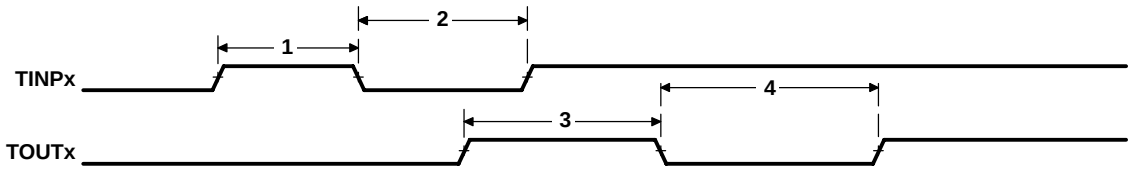

Figure 4−62. Timer Timing

4.18 General-Purpose Input/Output (GPIO)

The GPIO peripheral provides dedicated general-purpose pins that can be configured as either inputs or outputs. When configured as an output, you can write to an internal register to control the state driven on the output pin. When configured as an input, you can detect the state of the input by reading the state of an internal register.

In addition, the GPIO peripheral can produce CPU interrupts and EDMA events in different interrupt/event generation modes.

4.18.1 GPIO Device-Specific Information

To use the GP[7:0] software-configurable GPIO pins, the GPxEN bits in the GP Enable (GPEN) Register and the GPxDIR bits in the GP Direction (GPDIR) Register must be properly configured.

GPxEN = 1 GP[x] pin is enabled

GPxDIR = 0 GP[x] pin is an input

GPxDIR = 1 GP[x] pin is an output

where “x” represents one of the 7 through 0 GPIO pins

Figure 4−63 shows the GPIO enable bits in the GPEN register for the DM641/DM640 device. To use any of the GPx pins as general-purpose input/output functions, the corresponding GPxEN bit must be set to “1” (enabled). Default values are device-specific, so refer to Figure 4−63 for the DM641/DM640 default configuration.

31	30	29	28	27	26	25	24	23	22	21	20	19	18	17	16
Reserved															
R-0															

15	14	13	12	11	10	9	8	7	6	5	4	3	2	1	0
Reserved								GP7 EN	GP6 EN	GP5 EN	GP4 EN	GP3 EN	GP2 EN	GP1 EN	GP0 EN
R/W-0000 0000								R/W-1	R/W-1	R/W-1	R/W-1	R/W-1	R/W-0	R/W-0	R/W-1

Legend: R/W = Readable/Writeable; -*n* = value after reset, -x = undefined value after reset

Figure 4−63. GPIO Enable Register (GPEN) [Hex Address: 01B0 0000]

Figure 4−64 shows the GPIO direction bits in the GPDIR register. This register determines if a given GPIO pin is an input or an output providing the corresponding GPxEN bit is enabled (set to “1”) in the GPEN register. By default, all the GPIO pins are configured as input pins.

31	30	29	28	27	26	25	24	23	22	21	20	19	18	17	16
Reserved															
R-0															

15	14	13	12	11	10	9	8	7	6	5	4	3	2	1	0
Reserved								GP7 DIR	GP6 DIR	GP5 DIR	GP4 DIR	GP3 DIR	GP2 DIR	GP1 DIR	GP0 DIR
R/W-0000 0000								R/W-0	R/W-0	R/W-0	R/W-0	R/W-0	R/W-0	R/W-0	R/W-0

Legend: R/W = Readable/Writeable; -*n* = value after reset, -x = undefined value after reset

Figure 4−64. GPIO Direction Register (GPDIR) [Hex Address: 01B0 0004]

For more detailed information on general-purpose inputs/outputs (GPIOs), see the *TMS320C6000 DSP General-Purpose Input/Output (GPIO) Reference Guide* (literature number SPRU584).

4.18.2 GPIO Peripheral Register Description(s)

Table 4−79. GP0 Registers

HEX ADDRESS RANGE	ACRONYM	REGISTER NAME
01B0 0000	GPEN	GP0 enable register
01B0 0004	GPDIR	GP0 direction register
01B0 0008	GPVAL	GP0 value register
01B0 000C	−	Reserved
01B0 0010	GPDH	GP0 delta high register
01B0 0014	GPHM	GP0 high mask register
01B0 0018	GPDL	GP0 delta low register
01B0 001C	GPLM	GP0 low mask register
01B0 0020	GPGC	GP0 global control register
01B0 0024	GPPOL	GP0 interrupt polarity register
01B0 0028 − 01B3 EFFF	−	Reserved

4.18.3 General-Purpose Input/Output (GPIO) Electrical Data/Timing

Table 4−80. Timing Requirements for GPIO Inputs†‡ (see Figure 4−65)

NO.			−400 −500 −600		UNIT
			MIN	MAX	
1	$t_{w(GPIH)}$	Pulse duration, GPIx high	8P		ns
2	$t_{w(GPIL)}$	Pulse duration, GPIx low	8P		ns

† P = 1/CPU clock frequency in ns. For example, when running parts at 600 MHz, use P = 1.67 ns.

‡ The pulse width given is sufficient to generate a CPU interrupt or an EDMA event. However, if a user wants to have the DSP recognize the GPIx changes through software polling of the GPIO register, the GPIx duration must be extended to at least 12P to allow the DSP enough time to access the GPIO register through the CFGBUS.

Table 4−81. Switching Characteristics Over Recommended Operating Conditions for GPIO Outputs† (see Figure 4−65)

NO.	PARAMETER		−400 −500 −600		UNIT
			MIN	MAX	
3	$t_{w(GPOH)}$	Pulse duration, GPOx high	24P − 8‡		ns
4	$t_{w(GPOL)}$	Pulse duration, GPOx low	24P − 8‡		ns

† P = 1/CPU clock frequency in ns. For example, when running parts at 600 MHz, use P = 1.67 ns.

‡ This parameter value should not be used as a maximum performance specification. Actual performance of back-to-back accesses of the GPIO is dependent upon internal bus activity.

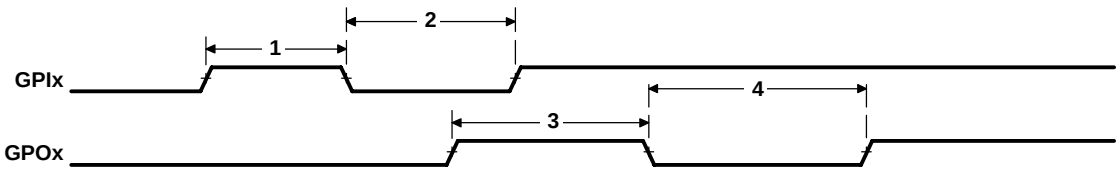

Figure 4−65. GPIO Port Timing

4.19 JTAG

The JTAG interface is used for BSDL testing and emulation of the DM641/DM640 device.

4.19.1 JTAG Device-Specific Information

4.19.1.1 IEEE 1149.1 JTAG Compatibility Statement

The TMS320DM641/DM640 DSP requires that both $\overline{\text{TRST}}$ and $\overline{\text{RESET}}$ be asserted upon power up to be properly initialized. While $\overline{\text{RESET}}$ initializes the DSP core, $\overline{\text{TRST}}$ initializes the DSP's emulation logic. Both resets are required for proper operation.

Note: $\overline{\text{TRST}}$ is synchronous and ***must*** be clocked by TCLK; otherwise, BSCAN may not respond as expected after $\overline{\text{TRST}}$ is asserted.

While both $\overline{\text{TRST}}$ and $\overline{\text{RESET}}$ need to be asserted upon power up, only $\overline{\text{RESET}}$ needs to be released for the DSP to boot properly. $\overline{\text{TRST}}$ may be asserted indefinitely for normal operation, keeping the JTAG port interface and DSP's emulation logic in the reset state. $\overline{\text{TRST}}$ only needs to be released when it is necessary to use a JTAG controller to debug the DSP or exercise the DSP's boundary scan functionality. $\overline{\text{RESET}}$ must be released in order for boundary-scan JTAG to read the variant field of IDCODE correctly. Other boundary-scan instructions work correctly independent of current state of $\overline{\text{RESET}}$.

The TMS320DM641/DM640 DSP includes an internal pulldown (IPD) on the $\overline{\text{TRST}}$ pin to ensure that $\overline{\text{TRST}}$ will always be asserted upon power up and the DSP's internal emulation logic will always be properly initialized when this pin is not routed out. JTAG controllers from Texas Instruments actively drive $\overline{\text{TRST}}$ high. However, some third-party JTAG controllers may not drive $\overline{\text{TRST}}$ high but expect the use of an external pullup resistor on $\overline{\text{TRST}}$. When using this type of JTAG controller, assert $\overline{\text{TRST}}$ to initialize the DSP after powerup and externally drive $\overline{\text{TRST}}$ high before attempting any emulation or boundary scan operations.

Following the release of $\overline{\text{RESET}}$, the low-to-high transition of $\overline{\text{TRST}}$ must occur to latch the state of EMU1 and EMU0. The EMU[1:0] pins configure the device for either Boundary Scan mode or Normal/Emulation mode. For more detailed information, see the terminal functions section of this data sheet.

Note: The DESIGN_WARNING section of the TMS320DM641/DM640 BSDL file contains information and constraints regarding proper device operation while in Boundary Scan Mode.

For more detailed information on the DM641 and DM640 JTAG emulation, see the *TMS320C6000 DSP Designing for JTAG Emulation Reference Guide* (literature number SPRU641).

4.19.1.2 JTAG ID Register Description

The JTAG ID register is a read-only register that identifies to the customer the JTAG/Device ID. For the DM641/DM640 device, the JTAG ID register resides at address location 0x01B3 F008. The register hex value for the DM641/DM640 device is: 0x0007 902F. For the actual register bit names and their associated bit field descriptions, see Figure 4−66 and Table 4−82.

31−28	27−12	11−1	0
VARIANT (4-Bit)	PART NUMBER (16-Bit)	MANUFACTURER (11-Bit)	LSB
R-0000	R-0000 0000 0111 1001	R-0000 0010 111	R-1

Legend: R = Read only; -n = value after reset

Figure 4−66. JTAG ID Register Description − TMS320DM641/DM640 Register Value − 0x0007 902F

Table 4−82. JTAG ID Register Selection Bit Descriptions

BIT	NAME	DESCRIPTION
31:28	VARIANT	Variant (4-Bit) value. DM641/DM640 value: 0000.
27:12	PART NUMBER	Part Number (16-Bit) value. DM641/DM640 value: 0000 0000 0111 1001.
11−1	MANUFACTURER	Manufacturer (11-Bit) value. DM641/DM640 value: 0000 0010 111.
0	LSB	LSB. This bit is read as a “1” for DM641/DM640.

4.19.2 JTAG Peripheral Register Description(s)

Table 4−83. JTAG ID Register

HEX ADDRESS RANGE	ACRONYM	REGISTER NAME	COMMENTS
01B3 F008	JTAGID	JTAG Identification Register	Read-only. Provides 32-bit JTAG ID of the device.

4.19.3 JTAG Test-Port Electrical Data/Timing

Table 4−84. Timing Requirements for JTAG Test Port (see Figure 4−67)

NO.			−400 −500 −600		UNIT
			MIN	MAX	
1	$t_{c(TCK)}$	Cycle time, TCK	35		ns
3	$t_{su(TDIV-TCKH)}$	Setup time, TDI/TMS/$\overline{TRST}$ valid before TCK high	10		ns
4	$t_{h(TCKH-TDIV)}$	Hold time, TDI/TMS/$\overline{TRST}$ valid after TCK high	9		ns

Table 4−85. Switching Characteristics Over Recommended Operating Conditions for JTAG Test Port (see Figure 4−67)

NO.	PARAMETER		−400 −500 −600		UNIT
			MIN	MAX	
2	$t_{d(TCKL-TDOV)}$	Delay time, TCK low to TDO valid	0	18	ns

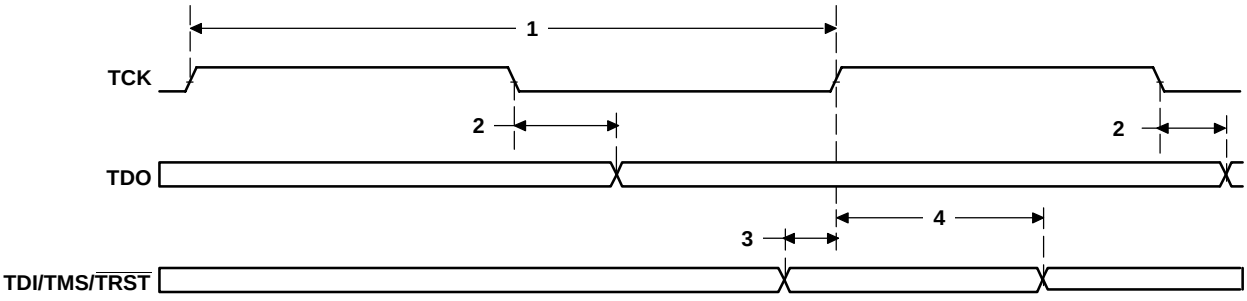

Figure 4−67. JTAG Test-Port Timing

5 Mechanical Data

The following table(s) show the thermal resistance characteristics for the PBGA − GDK, GNZ, ZDK and ZNZ mechanical packages.

5.1 Thermal Data

Table 5−1. Thermal Resistance Characteristics (S-PBGA Package) [GDK]

NO			°C/W	Air Flow (m/s†)
1	$R\Theta_{JC}$	Junction-to-case	3.3	N/A
2	$R\Theta_{JB}$	Junction-to-board	7.92	N/A
3	$R\Theta_{JA}$	Junction-to-free air	18.2	0.00
4			15.3	0.5
5			13.7	1.0
6			12.2	2.00
7	Psi_{JT}	Junction-to-package top	0.37	0.00
8			0.47	0.5
9			0.57	1.0
10			0.7	2.00
11	Psi_{JB}	Junction-to-board	11.4	0.00
12			11	0.5
13			10.7	1.0
14			10.2	2.00

† m/s = meters per second

Table 5−2. Thermal Resistance Characteristics (S-PBGA Package) [ZDK]

NO			°C/W	Air Flow (m/s†)
1	$R\Theta_{JC}$	Junction-to-case	3.3	N/A
2	$R\Theta_{JB}$	Junction-to-board	7.92	N/A
3	$R\Theta_{JA}$	Junction-to-free air	18.2	0.00
4			15.3	0.5
5			13.7	1.0
6			12.2	2.00
7	Psi_{JT}	Junction-to-package top	0.37	0.00
8			0.47	0.5
9			0.57	1.0
10			0.7	2.00
11	Psi_{JB}	Junction-to-board	11.4	0.00
12			11	0.5
13			10.7	1.0
14			10.2	2.00

† m/s = meters per second

Table 5−3. Thermal Resistance Characteristics (S-PBGA Package) [GNZ]

NO			°C/W	Air Flow (m/s†)
1	$R\Theta_{JC}$	Junction-to-case	3.3	N/A
2	$R\Theta_{JB}$	Junction-to-board	7.46	N/A
3	$R\Theta_{JA}$	Junction-to-free air	17.4	0.00
4			14.0	0.5
5			12.3	1.0
6			10.8	2.00
7	Psi_{JT}	Junction-to-package top	0.37	0.00
8			0.47	0.5
9			0.57	1.0
10			0.7	2.00
11	Psi_{JB}	Junction-to-board	11.4	0.00
12			11	0.5
13			10.7	1.0
14			10.2	2.00

† m/s = meters per second

Table 5−4. Thermal Resistance Characteristics (S-PBGA Package) [ZNZ]

NO			°C/W	Air Flow (m/s†)
1	$R\Theta_{JC}$	Junction-to-case	3.3	N/A
2	$R\Theta_{JB}$	Junction-to-board	7.46	N/A
3	$R\Theta_{JA}$	Junction-to-free air	17.4	0.00
4			14.0	0.5
5			12.3	1.0
6			10.8	2.00
7	Psi_{JT}	Junction-to-package top	0.37	0.00
8			0.47	0.5
9			0.57	1.0
10			0.7	2.00
11	Psi_{JB}	Junction-to-board	11.4	0.00
12			11	0.5
13			10.7	1.0
14			10.2	2.00

† m/s = meters per second

The following mechanical package diagram(s) reflect the most up-to-date mechanical data released for these designated device(s).

PACKAGING INFORMATION

Orderable part number	Status (1)	Material type (2)	Package | Pins	Package qty | Carrier	RoHS (3)	Lead finish/ Ball material (4)	MSL rating/ Peak reflow (5)	Op temp (°C)	Part marking (6)
TMS320DM640ACDKA4	Active	Production	FCBGA (CDK) | 548	60 | JEDEC TRAY (5+1)	Yes	Call TI	Level-4-260C-72HR	-40 to 105	TMS320DM640ACDK @ 2003 TI A4
TMS320DM640ACNZ4	Active	Production	FCBGA (CNZ) | 548	40 | JEDEC TRAY (5+1)	Yes	Call TI	Level-4-260C-72HR	0 to 90	TMS320DM640ACNZ @ 2003 TI
TMS320DM640AGNZ4	NRND	Production	FCBGA (GNZ) | 548	40 | null	No	SNPB	Level-4-220C-72 HR	0 to 90	TMS320DM640A @ 2003 TI GNZ
TMS320DM640AGNZ4.A	NRND	Production	FCBGA (GNZ) | 548	40 | null	No	SNPB	Level-4-220C-72 HR	-40 to 105	TMS320DM640A @ 2003 TI GNZ
TMS320DM640AZDKA4	Obsolete	Production	FCBGA (ZDK) | 548	-	-	Call TI	Call TI	-40 to 105	TMS320DM640A @ 2003 TI ZDK A4
TMS320DM640AZDKA4.A	Obsolete	Production	FCBGA (ZDK) | 548	-	-	Call TI	Call TI	-40 to 105	TMS320DM640A @ 2003 TI ZDK A4
TMS320DM640AZNZ4	Obsolete	Production	FCBGA (ZNZ) | 548	-	-	Call TI	Call TI	0 to 90	TMS320DM640A @ 2003 TI ZNZ
TMS320DM640AZNZ4.A	Obsolete	Production	FCBGA (ZNZ) | 548	-	-	Call TI	Call TI	-40 to 105	TMS320DM640A @ 2003 TI ZNZ
TMS320DM641AZNZ6	Last Time Buy	Production	FCBGA (ZNZ) | 548	40 | JEDEC TRAY (5+1)	ROHS Exempt	SNAGCU	Level-4-260C-72HR	-40 to 105	TMS320DM641A @ 2003 TI ZNZ
TMS320DM641AZNZ6.A	Last Time Buy	Production	FCBGA (ZNZ) | 548	40 | JEDEC TRAY (5+1)	ROHS Exempt	SNAGCU	Level-4-260C-72HR	-40 to 105	TMS320DM641A @ 2003 TI ZNZ

(1) **Status:** For more details on status, see our product life cycle.

(2) **Material type:** When designated, preproduction parts are prototypes/experimental devices, and are not yet approved or released for full production. Testing and final process, including without limitation quality assurance, reliability performance testing, and/or process qualification, may not yet be complete, and this item is subject to further changes or possible discontinuation. If available for ordering, purchases will be subject to an additional waiver at checkout, and are intended for early internal evaluation purposes only. These items are sold without warranties of any kind.

(3) **RoHS values:** Yes, No, RoHS Exempt. See the TI RoHS Statement for additional information and value definition.

(4) **Lead finish/Ball material:** Parts may have multiple material finish options. Finish options are separated by a vertical ruled line. Lead finish/Ball material values may wrap to two lines if the finish value exceeds the maximum column width.

(5) **MSL rating/Peak reflow:** The moisture sensitivity level ratings and peak solder (reflow) temperatures. In the event that a part has multiple moisture sensitivity ratings, only the lowest level per JEDEC standards is shown. Refer to the shipping label for the actual reflow temperature that will be used to mount the part to the printed circuit board.

(6) **Part marking:** There may be an additional marking, which relates to the logo, the lot trace code information, or the environmental category of the part.

Multiple part markings will be inside parentheses. Only one part marking contained in parentheses and separated by a "~" will appear on a part. If a line is indented then it is a continuation of the previous line and the two combined represent the entire part marking for that device.

Important Information and Disclaimer: The information provided on this page represents TI's knowledge and belief as of the date that it is provided. TI bases its knowledge and belief on information provided by third parties, and makes no representation or warranty as to the accuracy of such information. Efforts are underway to better integrate information from third parties. TI has taken and continues to take reasonable steps to provide representative and accurate information but may not have conducted destructive testing or chemical analysis on incoming materials and chemicals. TI and TI suppliers consider certain information to be proprietary, and thus CAS numbers and other limited information may not be available for release.

In no event shall TI's liability arising out of such information exceed the total purchase price of the TI part(s) at issue in this document sold by TI to Customer on an annual basis.

TRAY

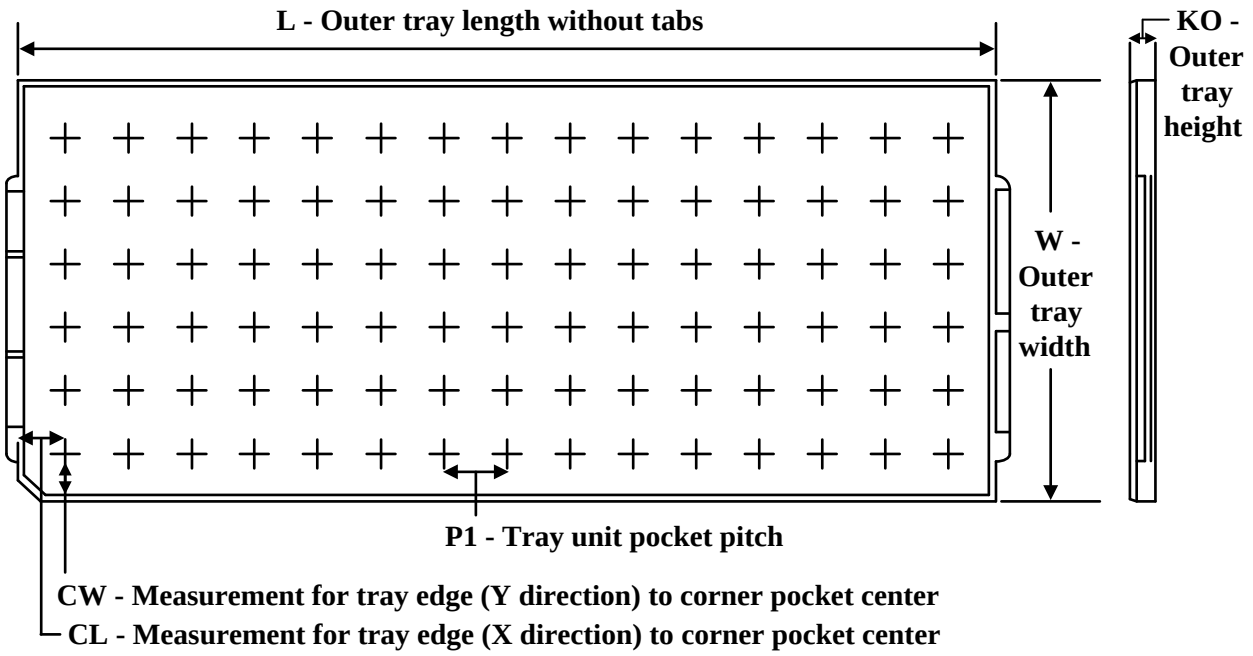

Chamfer on Tray corner indicates Pin 1 orientation of packed units.

*All dimensions are nominal

Device	Package Name	Package Type	Pins	SPQ	Unit array matrix	Max temperature (°C)	L (mm)	W (mm)	K0 (µm)	P1 (mm)	CL (mm)	CW (mm)
TMS320DM640ACDKA4	CDK	FCBGA	548	60	5 X 12	150	315	135.9	7620	25.5	17.25	16.95
TMS320DM640ACNZ4	CNZ	FCBGA	548	40	4x10	150	315	135.9	7620	29.2	26.1	24.15
TMS320DM641AZNZ6	ZNZ	FCBGA	548	40	4x10	150	315	135.9	7620	29.2	26.1	24.15
TMS320DM641AZNZ6.A	ZNZ	FCBGA	548	40	4x10	150	315	135.9	7620	29.2	26.1	24.15

ZDK (S–PBGA–N548) PLASTIC BALL GRID ARRAY

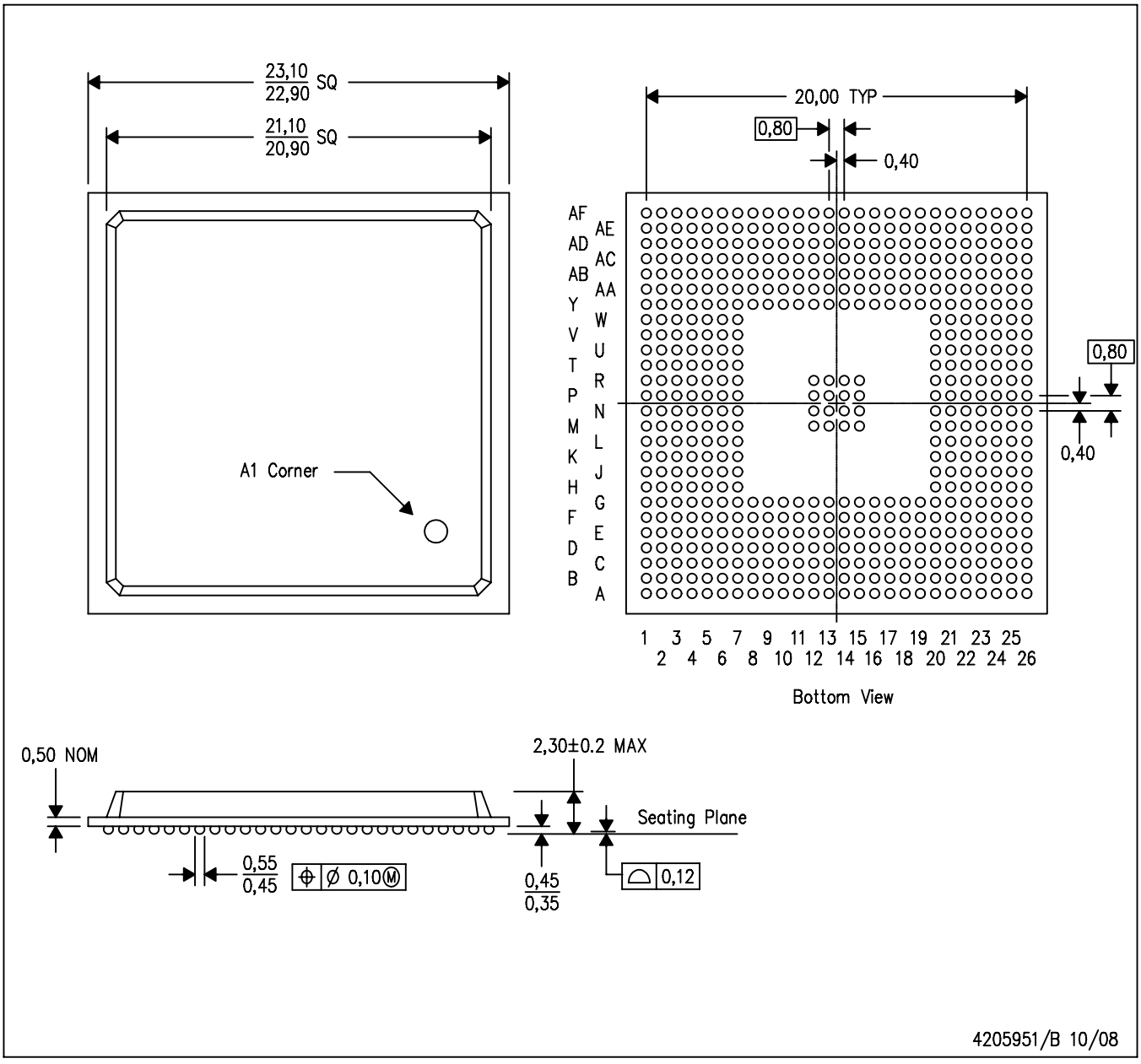

NOTES:
A. All linear dimensions are in millimeters.
B. This drawing is subject to change without notice.
C. Flip chip application only.
D. This package is lead–free.

ZNZ (S–PBGA–N548) PLASTIC BALL GRID ARRAY

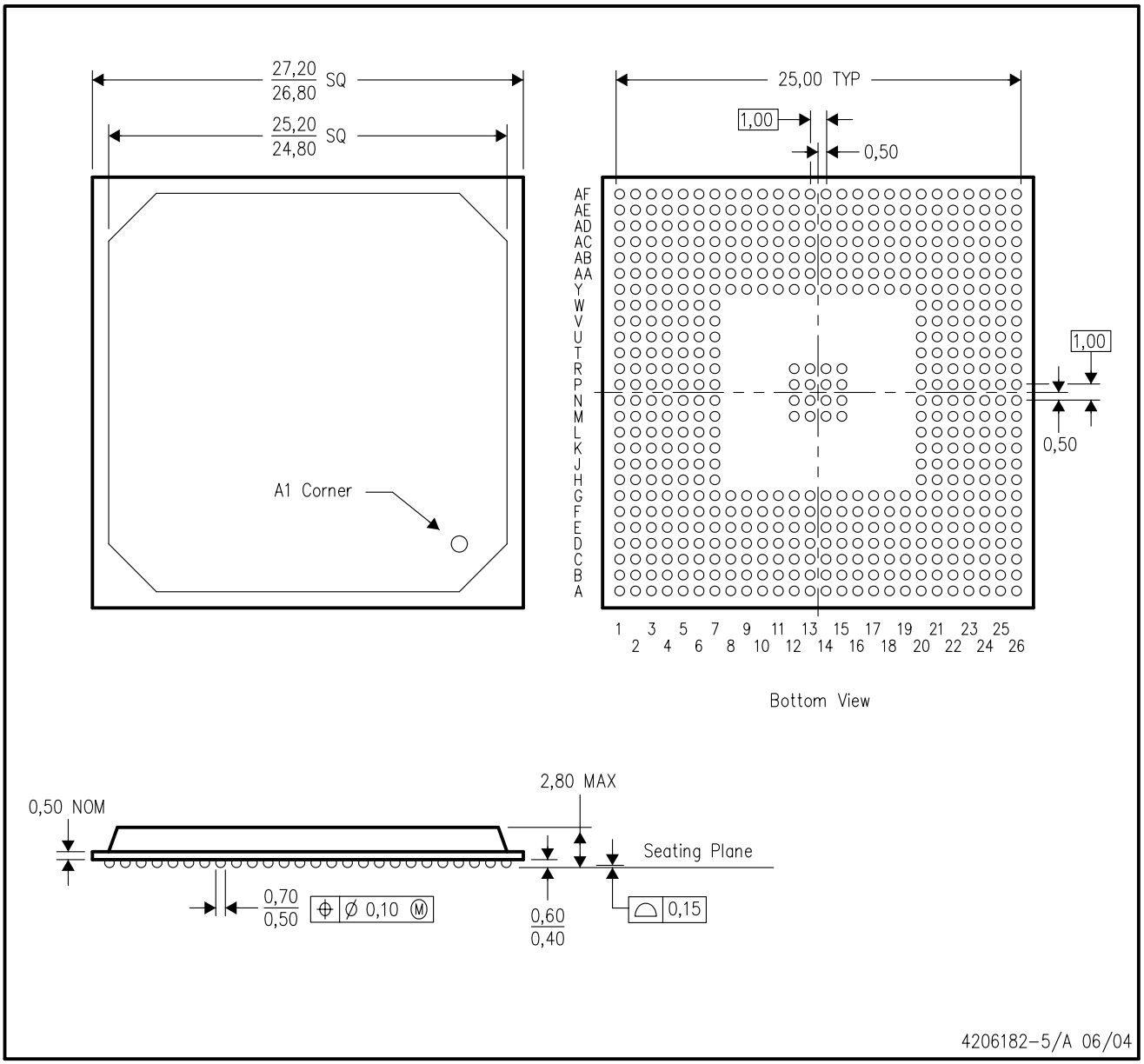

NOTES:
A. All linear dimensions are in millimeters.
B. This drawing is subject to change without notice.
C. Flip chip application only.
D. Substrate color may vary.
E. This package is lead–free.

PACKAGE OUTLINE

CNZ0548A

FCBGA - 2.8 mm max height

BALL GRID ARRAY

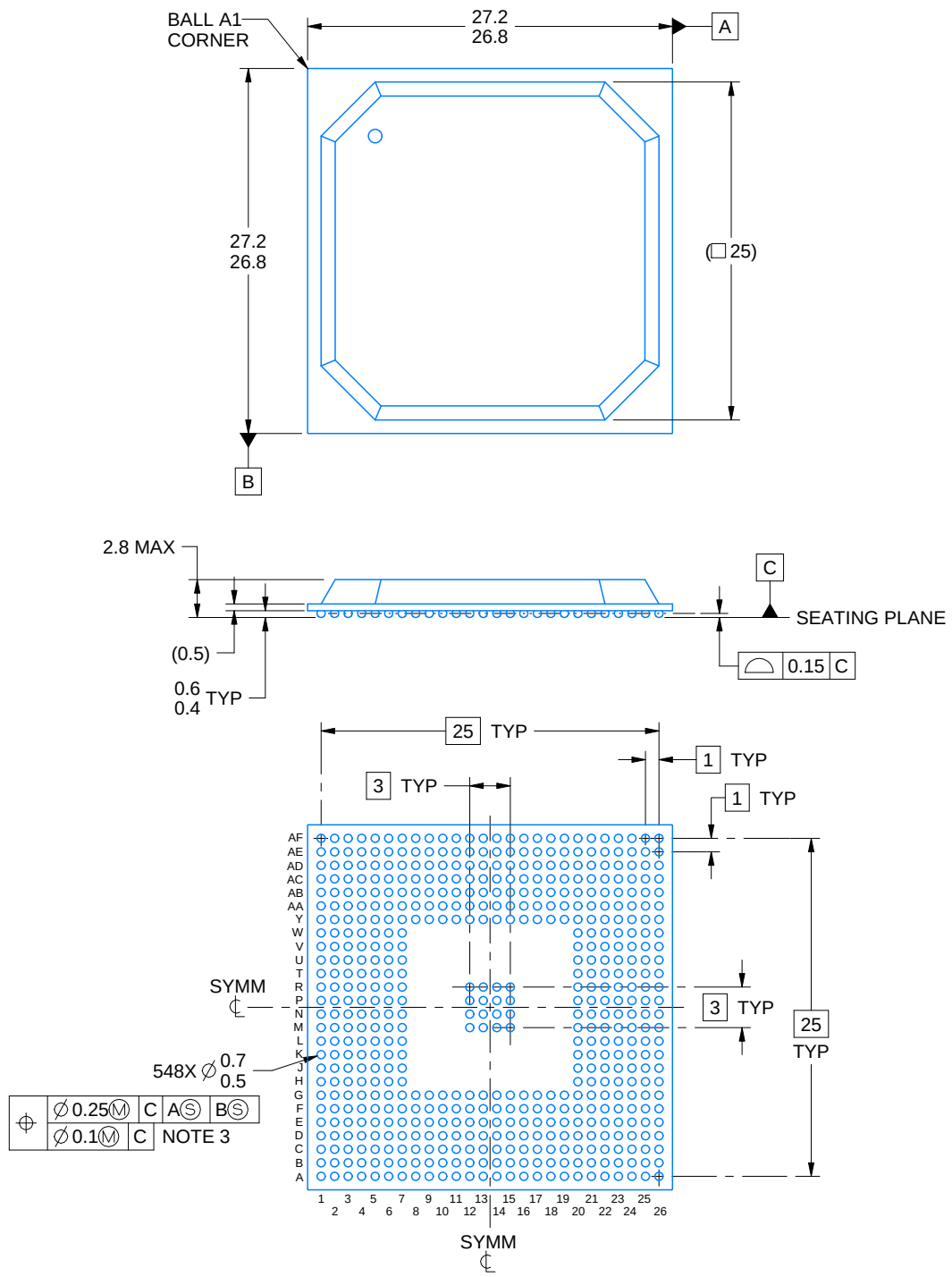

4221578/B 06/2026

NOTES:

1. All linear dimensions are in millimeters. Any dimensions in parenthesis are for reference only. Dimensioning and tolerancing per ASME Y14.5M.
2. This drawing is subject to change without notice.
3. Dimension is measured at the maximum solder ball diameter, parallel to primary datum C.
4. This is a Pb-free bump and solder ball design.

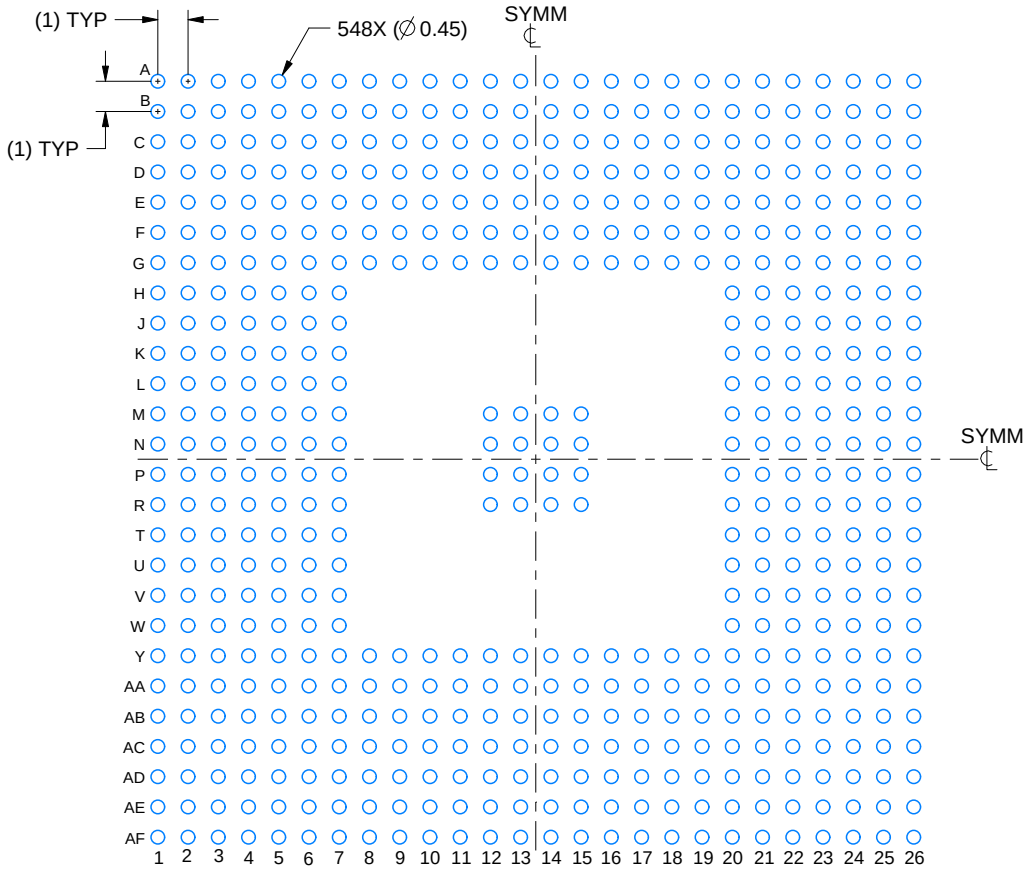

LAND PATTERN EXAMPLE
SCALE:4X

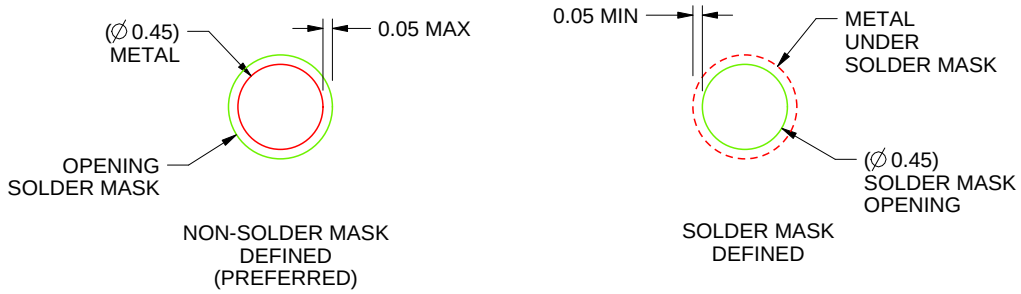

SOLDER MASK DETAILS
NOT TO SCALE

4221578/B 06/2026

NOTES: (continued)

5. Final dimensions may vary due to manufacturing tolerance considerations and also routing constraints.
For information, see Texas Instruments literature number SPRU811 (www.ti.com/lit/spru811).

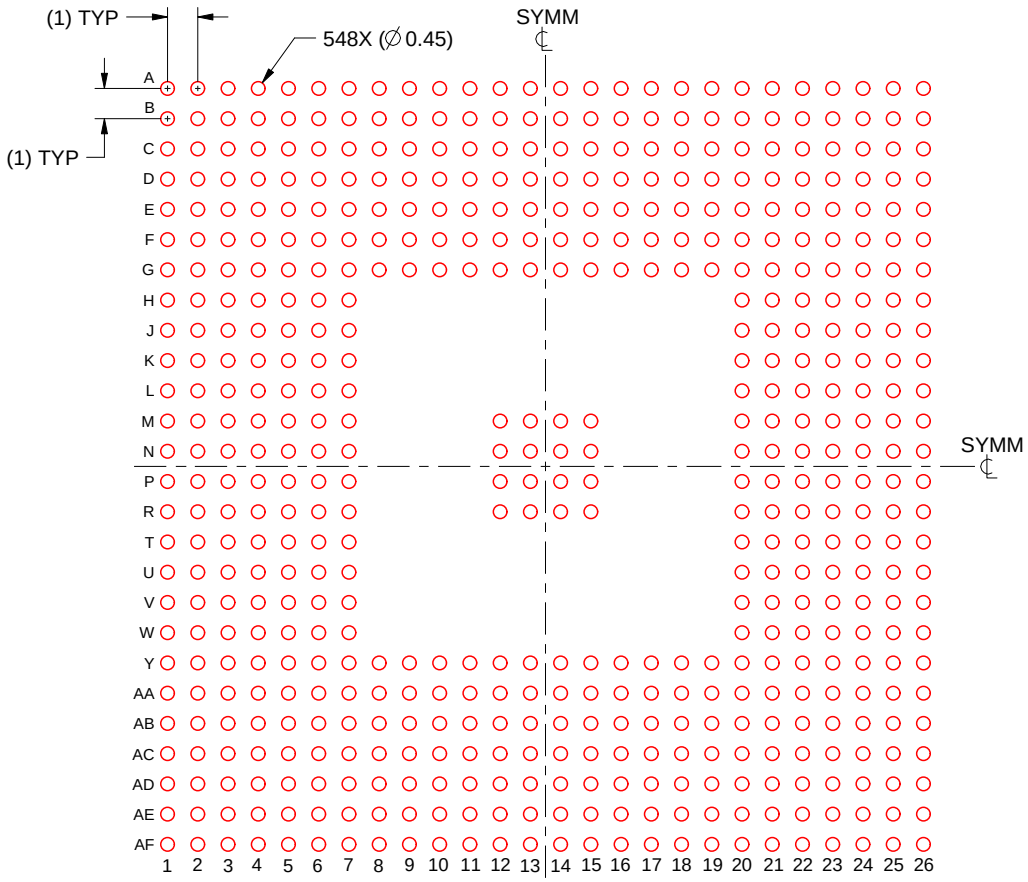

SOLDER PASTE EXAMPLE
BASED ON 0.15 mm THICK STENCIL
SCALE:4X

4221578/B 06/2026

NOTES: (continued)

6. Laser cutting apertures with trapezoidal walls and rounded corners may offer better paste release.

MPBG314A – OCTOBER 2002 – REVISED DECEMBER 2002

GNZ (S–PBGA–N548) **PLASTIC BALL GRID ARRAY**

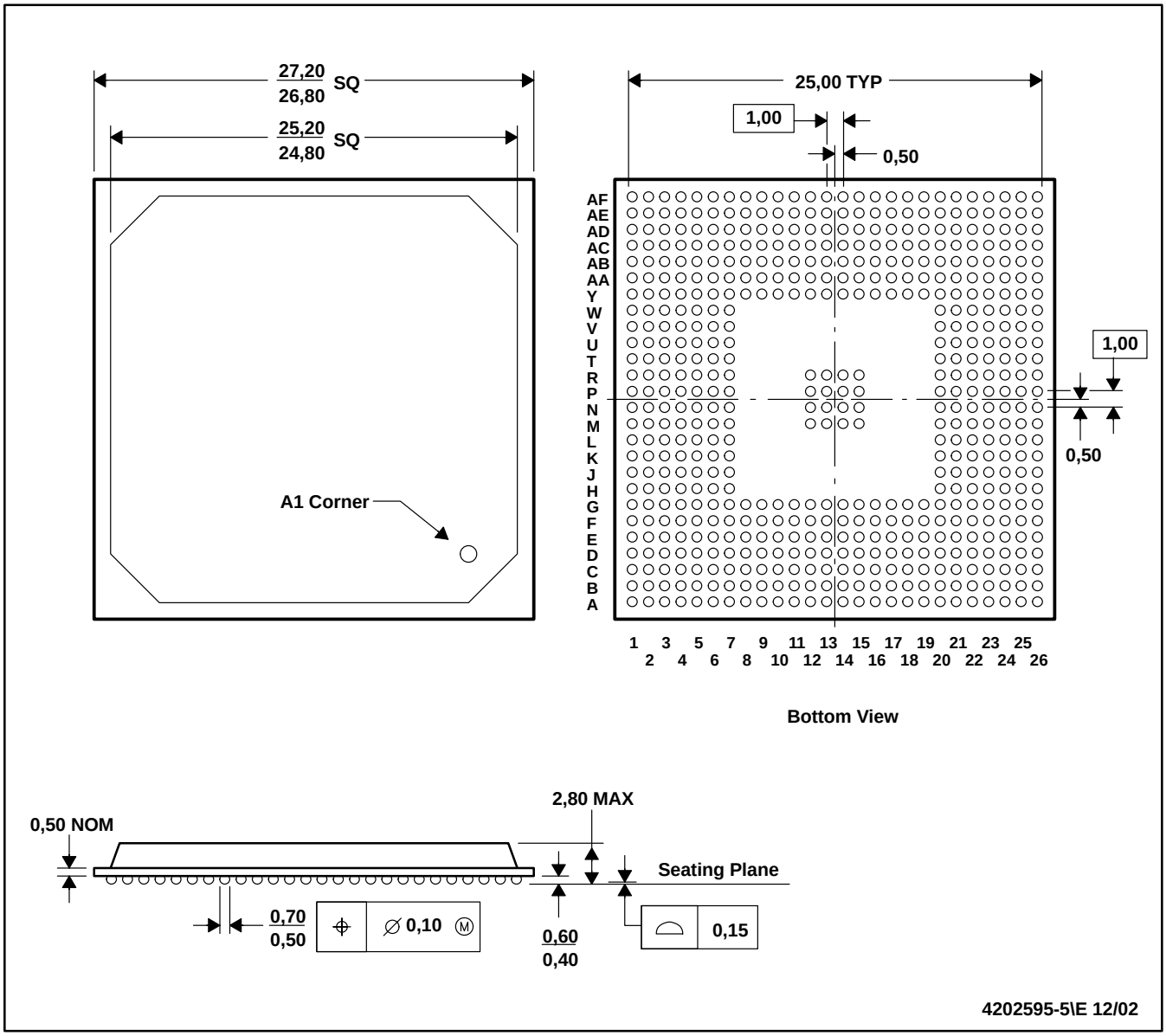

NOTES: A. All linear dimensions are in millimeters.
B. This drawing is subject to change without notice.
C. Flip chip application only.
D. Substrate color may vary.

IMPORTANT NOTICE AND DISCLAIMER

TI PROVIDES TECHNICAL AND RELIABILITY DATA (INCLUDING DATASHEETS), DESIGN RESOURCES (INCLUDING REFERENCE DESIGNS), APPLICATION OR OTHER DESIGN ADVICE, WEB TOOLS, SAFETY INFORMATION, AND OTHER RESOURCES “AS IS” AND WITH ALL FAULTS, AND DISCLAIMS ALL WARRANTIES, EXPRESS AND IMPLIED, INCLUDING WITHOUT LIMITATION ANY IMPLIED WARRANTIES OF MERCHANTABILITY, FITNESS FOR A PARTICULAR PURPOSE OR NON-INFRINGEMENT OF THIRD PARTY INTELLECTUAL PROPERTY RIGHTS.

These resources are intended for skilled developers designing with TI products. You are solely responsible for (1) selecting the appropriate TI products for your application, (2) designing, validating and testing your application, and (3) ensuring your application meets applicable standards, and any other safety, security, regulatory or other requirements.

These resources are subject to change without notice. TI grants you permission to use these resources only for development of an application that uses the TI products described in the resource. Other reproduction and display of these resources is prohibited. No license is granted to any other TI intellectual property right or to any third party intellectual property right. TI disclaims responsibility for, and you fully indemnify TI and its representatives against any claims, damages, costs, losses, and liabilities arising out of your use of these resources.

TI’s products are provided subject to TI’s Terms of Sale, TI’s General Quality Guidelines, or other applicable terms available either on ti.com or provided in conjunction with such TI products. TI’s provision of these resources does not expand or otherwise alter TI’s applicable warranties or warranty disclaimers for TI products. Unless TI explicitly designates a product as custom or customer-specified, TI products are standard, catalog, general purpose devices.

TI objects to and rejects any additional or different terms you may propose.

Copyright © 2026, Texas Instruments Incorporated

Last updated 10/2025