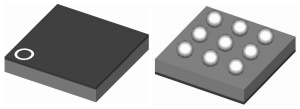

3-W Mono Class-D Audio Amplifier with SmartGain™ AGC/DRC

FEATURES

- **Filter-Free Class-D Architecture**
- **3 W Into 4 Ω at 5 V (10% THD+N)**
- **880 mW Into 8 Ω at 3.6 V (10% THD+N)**
- **Power Supply Range: 2.5 V to 5.5 V**
- **Flexible Operation With/Without I²C™**
- **Programmable DRC/AGC Parameters**
- **Digital I²C™ Volume Control**
- **Selectable Gain from –28 dB to 30 dB in 1-dB Steps (when compression is used)**
- **Selectable Attack, Release and Hold Times**
- **4 Selectable Compression Ratios**
- **Low Supply Current: 1.8 mA**
- **Low Shutdown Current: 0.2 µA**
- **High PSRR: 80 dB**
- **Fast Start-up Time: 5 ms**
- **AGC Enable/Disable Function**
- **Limiter Enable/Disable Function**
- **Short-Circuit and Thermal Protection**
- **Space-Saving Package**
  - **1,63 mm × 1,63 mm Nano-Free™ WCSP (YZF)**

APPLICATIONS

- **Wireless or Cellular Handsets and PDAs**
- **Portable Navigation Devices**
- **Portable DVD Player**
- **Notebook PCs**
- **Portable Radio**
- **Portable Games**
- **Educational Toys**
- **USB Speakers**

DESCRIPTION

The TPA2018D1 is a mono, filter-free Class-D audio power amplifier with volume control, dynamic range compression (DRC) and automatic gain control (AGC). It is available in a 1.63 mm x 1.63 mm WCSP package.

The DRC/AGC function in the TPA2018D1 is programmable via a digital I²C interface. The DRC/AGC function can be configured to automatically prevent distortion of the audio signal and enhance quiet passages that are normally not heard. The DRC/AGC can also be configured to protect the speaker from damage at high power levels and compress the dynamic range of music to fit within the dynamic range of the speaker. The gain can be selected from –28 dB to +30 dB in 1-dB steps. The TPA2018D1 is capable of driving 3 W at 5 V into 4 Ω load or 880 mW at 3.6 V into 8 Ω load. The device features hardware and software shutdown controls and also provides thermal and short-circuit protection.

In addition to these features, a fast start-up time and small package size make the TPA2018D1 an ideal choice for cellular handsets, PDAs and other portable applications.

SIMPLIFIED APPLICATION DIAGRAM

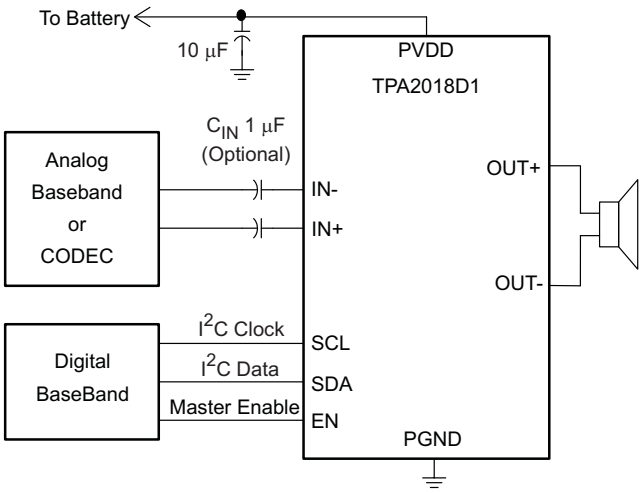

Please be aware that an important notice concerning availability, standard warranty, and use in critical applications of Texas Instruments semiconductor products and disclaimers thereto appears at the end of this data sheet.

SmartGain, Nano-Free are trademarks of Texas Instruments.
I2C is a trademark of NXP Semiconductors.

PRODUCTION DATA information is current as of publication date. Products conform to specifications per the terms of the Texas Instruments standard warranty. Production processing does not necessarily include testing of all parameters.

Copyright © 2009, Texas Instruments Incorporated

These devices have limited built-in ESD protection. The leads should be shorted together or the device placed in conductive foam during storage or handling to prevent electrostatic damage to the MOS gates.

FUNCTIONAL BLOCK DIAGRAM

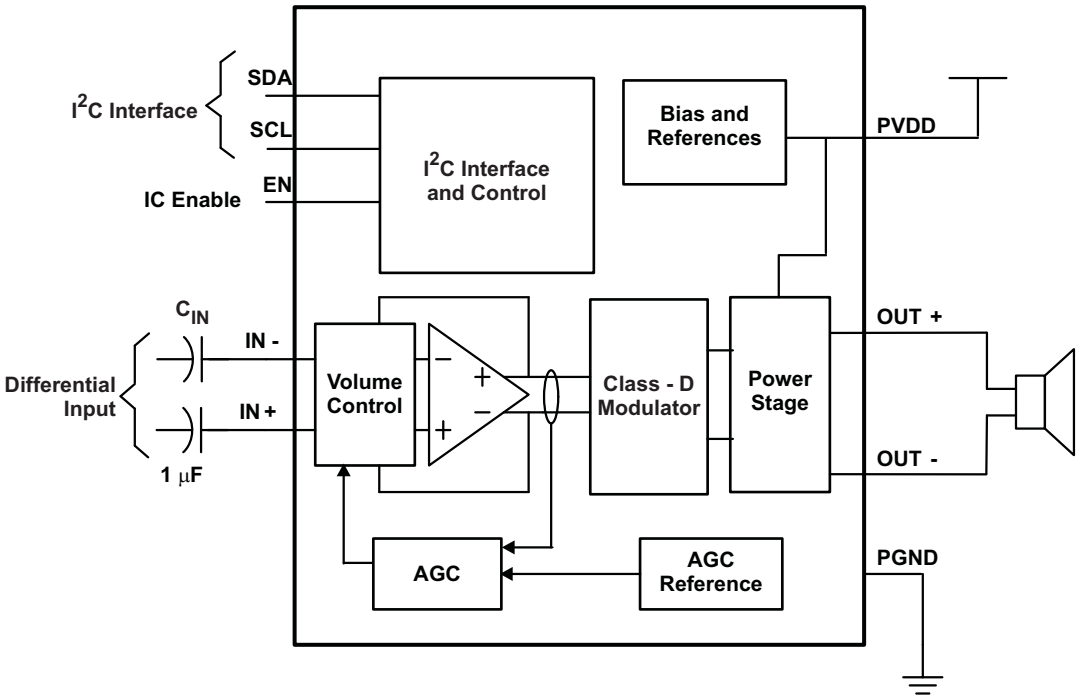

DEVICE PINOUT

YZF (WCSP) PACKAGE
(TOP VIEW)

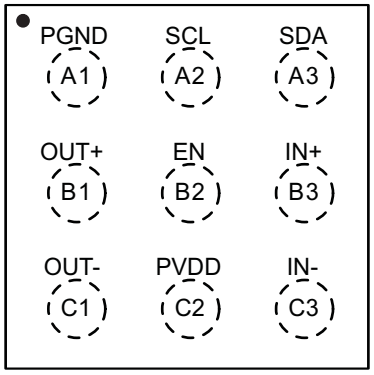

Copyright © 2009, Texas Instruments Incorporated

TERMINAL FUNCTIONS

TERMINAL		I/O/P	DESCRIPTION
NAME	WCSP		
EN	B2	I	Enable terminal (active high)
IN+	B3	I	Positive audio input
IN–	C3	I	Negative audio input
OUT+	B1	O	Positive differential output
OUT–	C1	O	Negative differential output
PGND	A1	P	Power ground
PVDD	C2	P	Power supply
SCL	A2	I	I^2C clock interface
SDA	A3	I/O	I^2C data interface

ABSOLUTE MAXIMUM RATINGS(1)

over operating free-air temperature range (unless otherwise noted).

			VALUE / UNIT
V_{DD}	Supply voltage	PVDD	–0.3 V to 6.0 V
	Input voltage	EN, IN+, IN–	–0.3 V to V_{DD}+0.3 V
		SDA, SCL	–0.3 V to 6.0 V
	Continuous total power dissipation		See Dissipation Ratings Table
T_A	Operating free-air temperature range		–40°C to +85°C
T_J	Operating junction temperature range		–40°C to +150°C
T_{stg}	Storage temperature range		–65°C to +150°C
ESD	Electro-Static Discharge Tolerance, all pins	Human Body Model (HBM)	2 kV
		Charged Device Model (CDM)	500 V
R_{LOAD}	Minimum load resistance		3.2 Ω

(1) Stresses beyond those listed under "absolute maximum ratings" may cause permanent damage to the device. These are stress ratings only, and functional operation of the device at these or any other conditions beyond those indicated under "recommended operating conditions" is not implied. Exposure to absolute-maximum-rated conditions for extended periods may affect device reliability.

DISSIPATION RATINGS TABLE(1)

PACKAGE	T_A ≤ +25°C	DERATING FACTOR	T_A = +70°C	T_A = +85°C
9-ball WCSP	1.19 W	9.52 mW/°C	0.76 W	0.62 W

(1) Dissipation ratings are for a 2-side, 2-plane PCB.

Copyright © 2009, Texas Instruments Incorporated

AVAILABLE OPTIONS(1)

T_A	PACKAGED DEVICES(2)	PART NUMBER	SYMBOL
–40°C to 85°C	9-ball, WCSP	TPA2018D1YZFR	OBC
		TPA2018D1YZFT	OBC

(1) For the most current package and ordering information, see the Package Option Addendum at the end of this document, or see the TI Web site at www.ti.com
(2) The YZF packages are only available taped and reeled. The suffix R indicates a reel of 3000; the suffix T indicates a reel of 250.

RECOMMENDED OPERATING CONDITIONS

			MIN	MAX	UNIT
V_{DD}	Supply voltage	PVDD	2.5	5.5	V
V_{IH}	High-level input voltage	EN, SDA, SCL	1.3		V
V_{IL}	Low-level input voltage	EN, SDA, SCL		0.6	V
T_A	Operating free-air temperature		–40	+85	°C

ELECTRICAL CHARACTERISTICS

at T_A = 25°C, V_{DD} = 3.6 V, SDZ = 1.3 V, and R_L = 8 Ω + 33 µH (unless otherwise noted).

PARAMETER		TEST CONDITIONS	MIN	TYP	MAX	UNIT
V_{DD}	Supply voltage range		2.5	3.6	5.5	V
I_{SDZ}	Shutdown quiescent current	EN = 0.35 V, V_{DD} = 2.5 V		0.1	1	µA
		EN = 0.35 V, V_{DD} = 3.6 V		0.2	1	
		EN = 0.35 V, V_{DD} = 5.5 V		0.3	1	
I_{SWS}	Software shutdown quiescent current	EN = 1.3 V, V_{DD} = 2.5 V		35	50	µA
		EN = 1.3 V, V_{DD} = 3.6 V		50	70	
		EN = 1.3 V, V_{DD} = 5.5 V		75	100	
I_{DD}	Supply current	V_{DD} = 2.5 V		1.5	2.5	mA
		V_{DD} = 3.6 V		1.7	2.7	
		V_{DD} = 5.5 V		2	3.5	
f_{SW}	Class D Switching Frequency		275	300	325	kHz
I_{IH}	High-level input current	V_{DD} = 5.5 V, EN = 5.8 V			1	µA
I_{IL}	Low-level input current	V_{DD} = 5.5 V, EN = –0.3 V	–1			µA
t_{START}	Start-up time	2.5 V ≤ V_{DD} ≤ 5.5 V no pop, C_{IN} ≤ 1 µF		5		ms
POR	Power on reset ON threshold			2	2.3	V
POR	Power on reset hysteresis			0.2		V
CMRR	Input common mode rejection	R_L = 8 Ω, V_{icm} = 0.5 V and V_{icm} = V_{DD} – 0.8 V, differential inputs shorted		–75		dB
V_{oo}	Output offset voltage	V_{DD} = 3.6 V, A_V = 6 dB, R_L = 8 Ω, inputs ac grounded		1.5	10	mV
Z_{OUT}	Output Impedance in shutdown mode	EN = 0.35 V		2		kΩ
	Gain accuracy	Compression and limiter disabled, Gain = 0 to 30 dB	–0.5		0.5	dB
PSRR	Power supply rejection ratio	V_{DD} = 2.5 V to 4.7 V		-80		dB

Copyright © 2009, Texas Instruments Incorporated

OPERATING CHARACTERISTICS

at T_A = 25°C, V_{DD} = 3.6V, EN = 1.3 V, R_L = 8 Ω +33 µH, and A_V = 6 dB (unless otherwise noted).

PARAMETER		TEST CONDITIONS	MIN	TYP	MAX	UNIT
k_{SVR}	power-supply ripple rejection ratio	V_{DD} = 3.6 Vdc with ac of 200 mV_{PP} at 217 Hz		–70		dB
THD+N	Total harmonic distortion + noise	f_{aud_in} = 1 kHz; P_O = 550 mW; V_{DD} = 3.6 V		0.1%		
		f_{aud_in} = 1 kHz; P_O = 1.25 W; V_{DD} = 5 V		0.1%		
		f_{aud_in} = 1 kHz; P_O = 710 mW; V_{DD} = 3.6 V		1%		
		f_{aud_in} = 1 kHz; P_O = 1.4 W; V_{DD} = 5 V		1%		
Nfo_{nF}	Output integrated noise	Av = 6 dB		42		µV
Nfo_A	Output integrated noise	Av = 6 dB floor, A-weighted		30		µV
FR	Frequency response	Av = 6 dB	20		20000	Hz
Po_{max}	Maximum output power	THD+N = 10%, V_{DD} = 5 V, R_L = 8 Ω		1.72		W
		THD+N = 10%, V_{DD} = 3.6 V, R_L = 8 Ω		880		mW
		THD+N = 1%, V_{DD} = 5 V, R_L = 8 Ω		1.4		W
		THD+N = 1% , V_{DD} = 3.6 V, R_L = 8 Ω		710		mW
		THD+N = 1% , V_{DD} = 5 V, R_L = 4 Ω		2.5		W
		THD+N = 10% , V_{DD} = 5 V, R_L = 4 Ω		3		W
η	Efficiency	THD+N = 1%, V_{DD} = 3.6 V, R_L = 8 Ω, P_O= 0.71 W		91%		
		THD+N = 1%, V_{DD} = 5 V, R_L = 8 Ω, P_O = 1.4 W		93%		

TEST SET-UP FOR GRAPHS

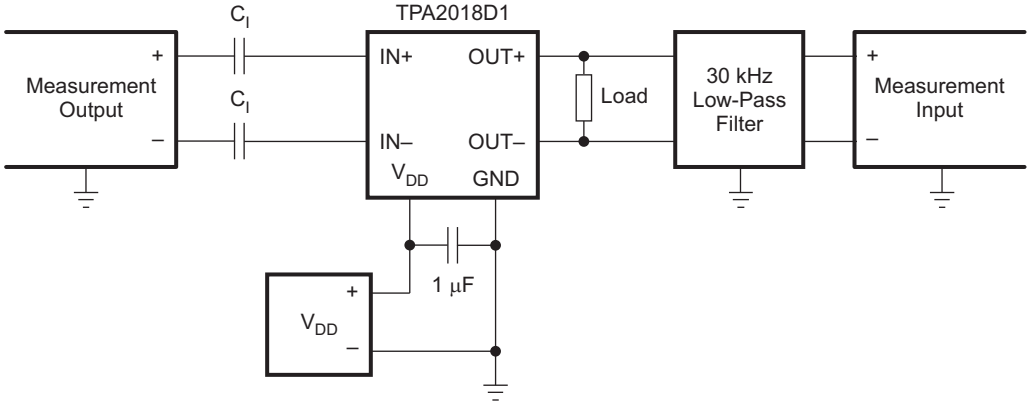

(1) All measurements were taken with a 1-µF C_I (unless otherwise noted.)

(2) A 33-µH inductor was placed in series with the load resistor to emulate a small speaker for efficiency measurements.

(3) The 30-kHz low-pass filter is required, even if the analyzer has an internal low-pass filter. An RC low-pass filter (1 kΩ 4.7 nF) is used on each output for the data sheet graphs.

Copyright © 2009, Texas Instruments Incorporated

I²C TIMING CHARACTERISTICS

For I²C Interface Signals Over Recommended Operating Conditions (unless otherwise noted)

PARAMETER		TEST CONDITIONS	MIN	TYP	MAX	UNIT
f_{SCL}	Frequency, SCL	No wait states			400	kHz
$t_{W(H)}$	Pulse duration, SCL high		0.6			µs
$t_{W(L)}$	Pulse duration, SCL low		1.3			µs
$t_{SU(1)}$	Setup time, SDA to SCL		100			ns
t_{h1}	Hold time, SCL to SDA		10			ns
$t_{(buf)}$	Bus free time between stop and start condition		1.3			µs
t_{SU2}	Setup time, SCL to start condition		0.6			µs
t_{h2}	Hold time, start condition to SCL		0.6			µs
t_{SU3}	Setup time, SCL to stop condition		0.6			µs

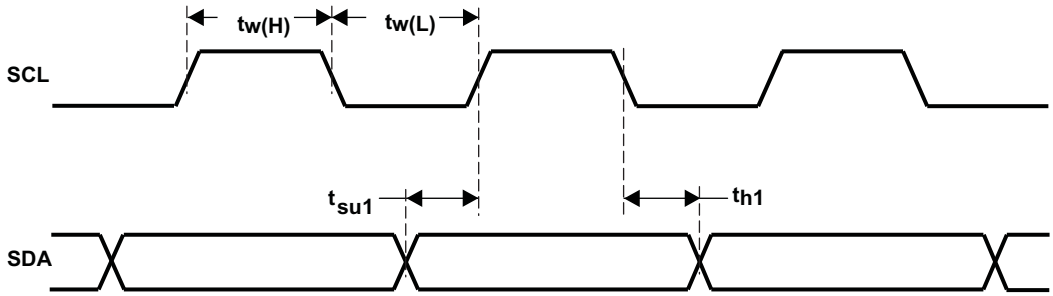

Figure 1. SCL and SDA Timing

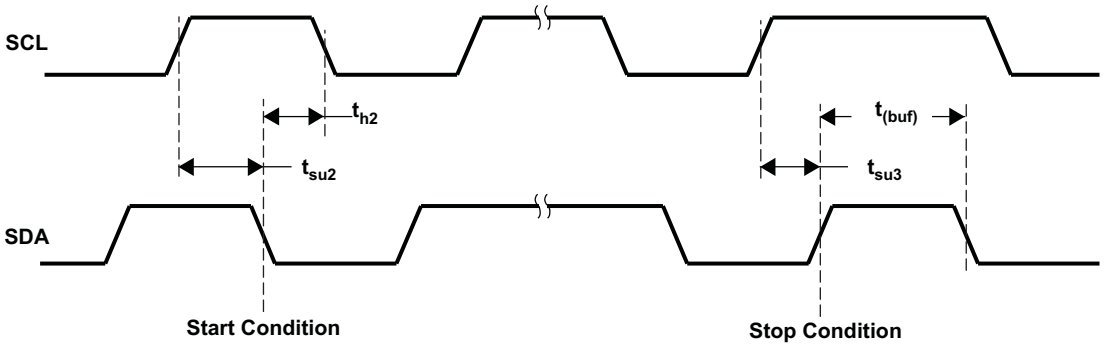

Figure 2. Start and Stop Conditions Timing

Copyright © 2009, Texas Instruments Incorporated

TYPICAL CHARACTERISTICS

with $C_{(DECOUPLE)}$ = 1 µF, C_I = 1 µF.
All THD + N graphs are taken with outputs out of phase (unless otherwise noted).

Table of Graphs

		FIGURE
Quiescent supply current	vs Supply voltage	Figure 3
Supply current	vs Supply voltage in shutdown	Figure 4
Output level	vs Input level with limiter enabled	Figure 5
	vs Input level with 2:1 compression	Figure 6
	vs Input level with 4:1 compression	Figure 7
	vs Input level with 8:1 compression	Figure 8
	vs Input level	Figure 9
Supply ripple rejection ratio	vs Frequency	Figure 10
Total harmonic distortion + noise	vs Frequency [R_L = 8 Ω, V_{DD} = 3.6 V]	Figure 11
	vs Frequency [R_L = 8 Ω, V_{DD} = 5 V]	Figure 12
	vs Frequency [R_L = 4 Ω, V_{DD} = 3.6 V]	Figure 13
	vs Frequency [R_L = 4 Ω, V_{DD} = 5 V]	Figure 14
Total harmonic distortion + noise	vs Output power [R_L = 8 Ω]	Figure 15
	vs Output power [R_L = 4 Ω]	Figure 16
Efficiency	vs Output power [per channel, R_L = 8 Ω]	Figure 17
	vs Output power [per channel, R_L = 4 Ω]	Figure 18
Power dissipation	vs Output power [R_L = 8 Ω]	Figure 19
	vs Output power [R_L = 4 Ω]	Figure 20
Supply current	vs Output power [R_L = 8 Ω]	Figure 21
	vs Output power [R_L = 4 Ω]	Figure 22
Output power	vs Supply voltage [R_L = 8 Ω]	Figure 23
	vs Supply voltage [R_L = 4 Ω]	Figure 24
Shutdown time		Figure 25
Startup time		Figure 26

QUIESCENT SUPPLY CURRENT vs SUPPLY VOLTAGE

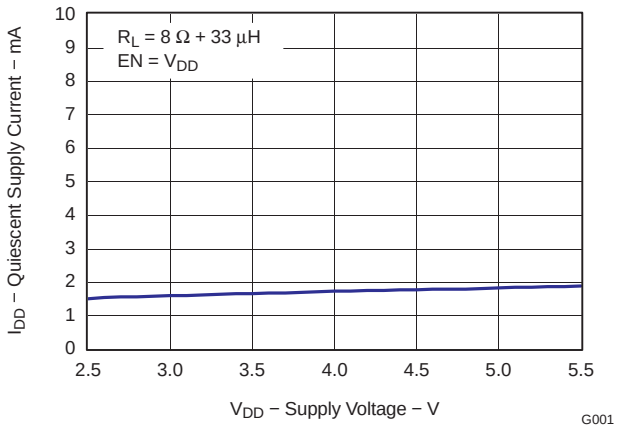

Figure 3.

SUPPLY CURRENT vs SUPPLY VOLTAGE IN SHUTDOWN

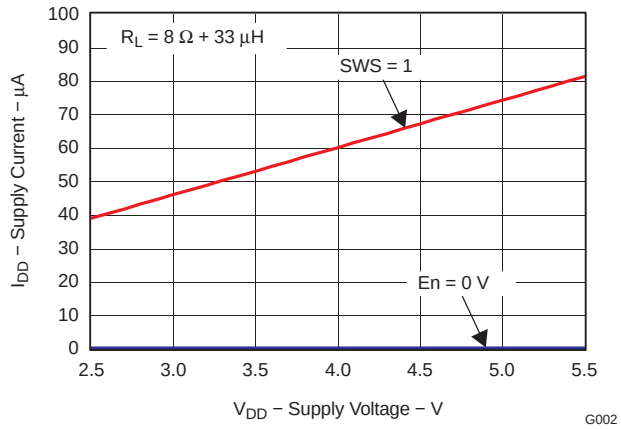

Figure 4.

OUTPUT LEVEL vs INPUT LEVEL WITH LIMITER ENABLED

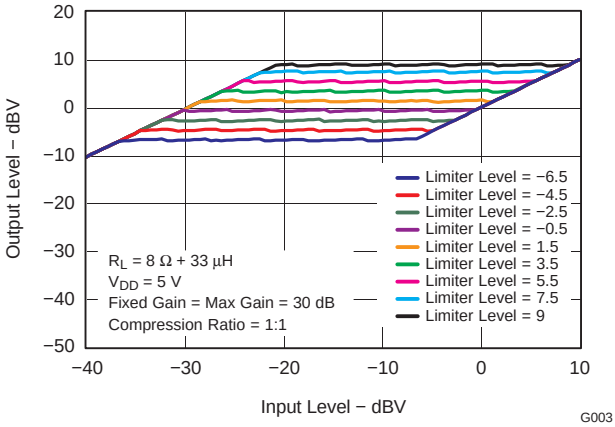

Figure 5.

OUTPUT LEVEL vs INPUT LEVEL WITH 2:1 COMPRESSION

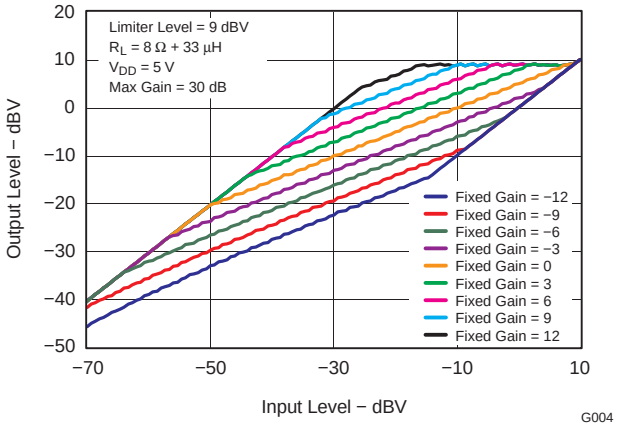

Figure 6.

OUTPUT LEVEL vs INPUT LEVEL WITH 4:1 COMPRESSION

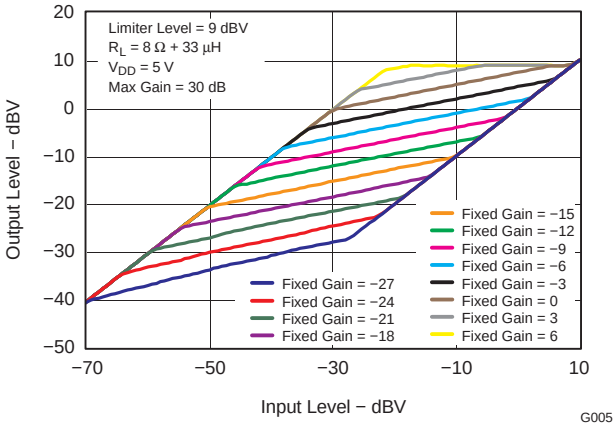

Figure 7.

OUTPUT LEVEL vs INPUT LEVEL WITH 8:1 COMPRESSION

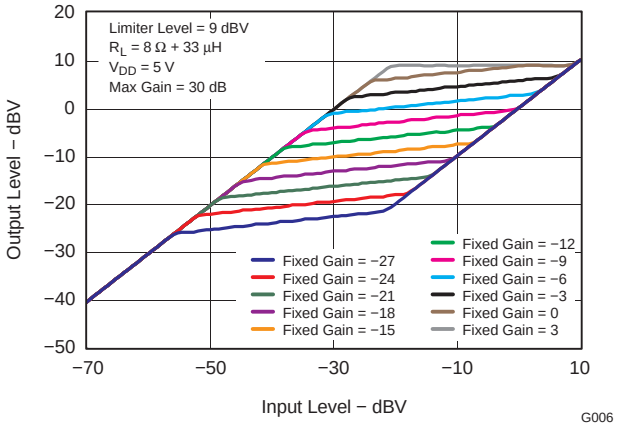

Figure 8.

OUTPUT LEVEL vs INPUT LEVEL

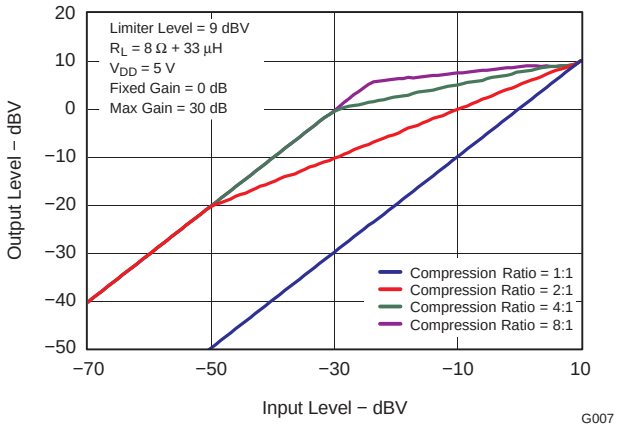

Figure 9.

SUPPLY RIPPLE REJECTION RATIO vs FREQUENCY

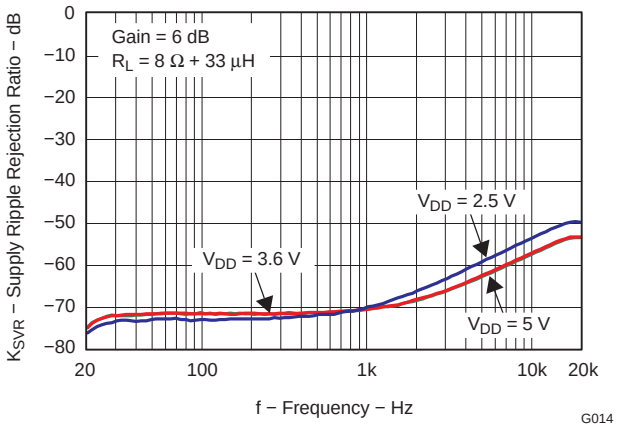

Figure 10.

Copyright © 2009, Texas Instruments Incorporated

TOTAL HARMONIC DISTORTION + NOISE vs FREQUENCY

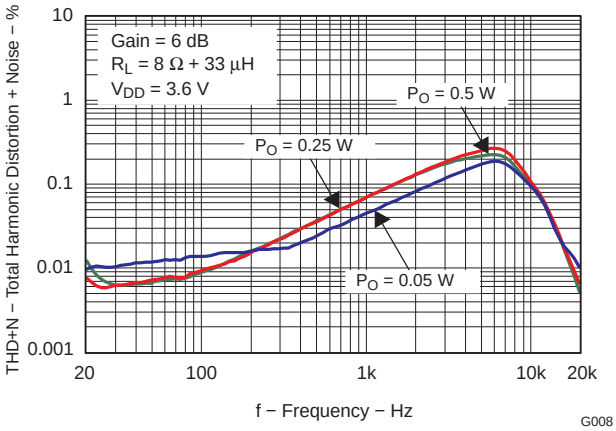

Figure 11.

TOTAL HARMONIC DISTORTION + NOISE vs FREQUENCY

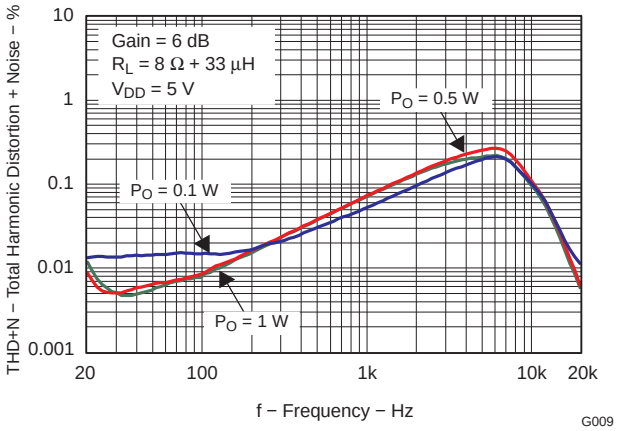

Figure 12.

TOTAL HARMONIC DISTORTION + NOISE vs FREQUENCY

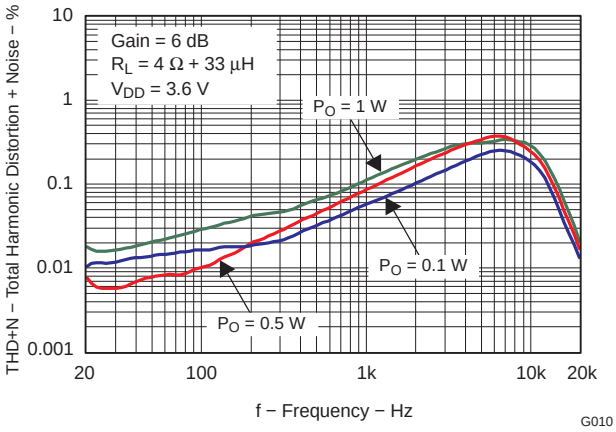

Figure 13.

TOTAL HARMONIC DISTORTION + NOISE vs FREQUENCY

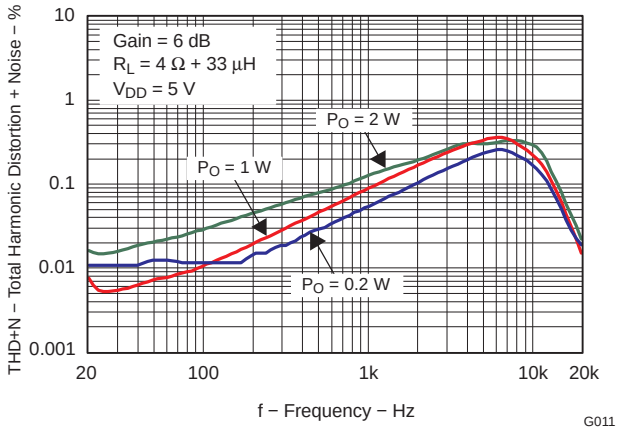

Figure 14.

TOTAL HARMONIC DISTORTION + NOISE vs OUTPUT POWER

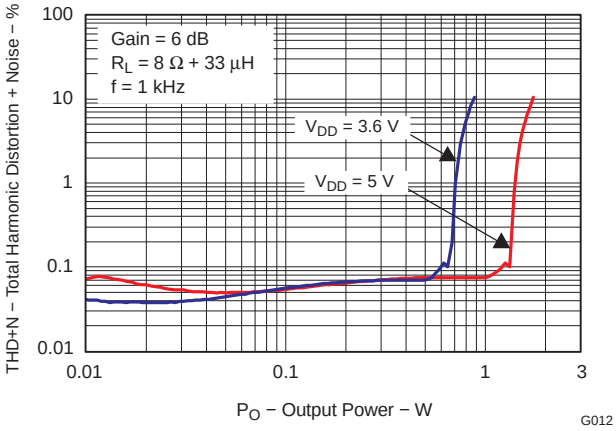

Figure 15.

TOTAL HARMONIC DISTORTION + NOISE vs OUTPUT POWER

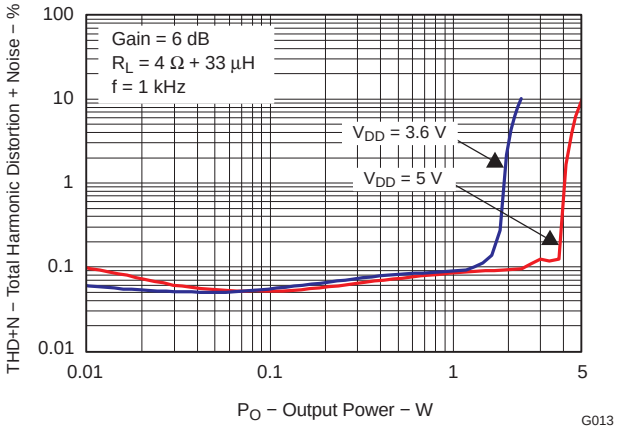

Figure 16.

Copyright © 2009, Texas Instruments Incorporated

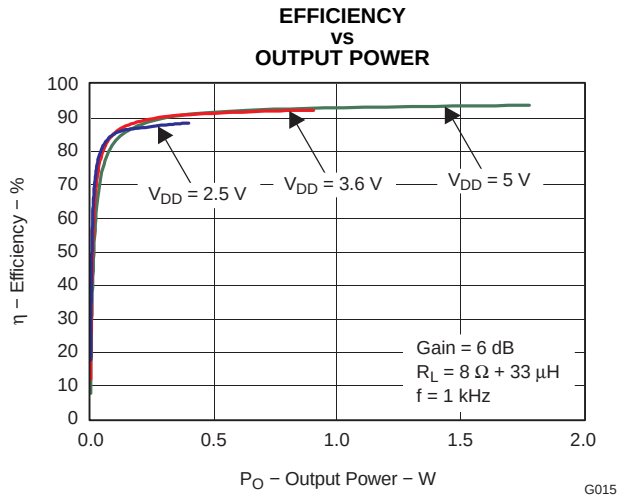

Figure 17.

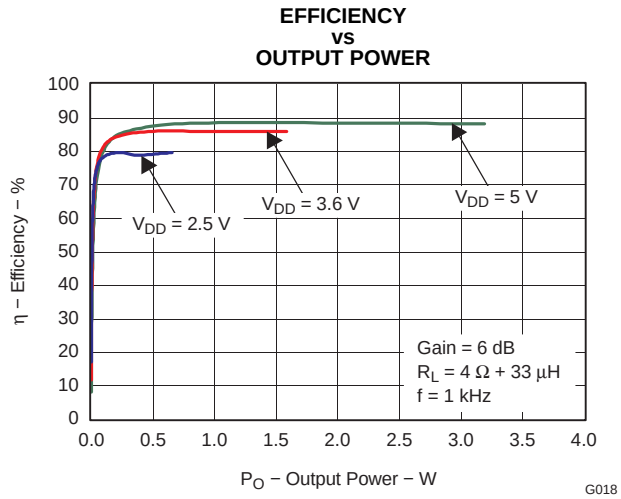

Figure 18.

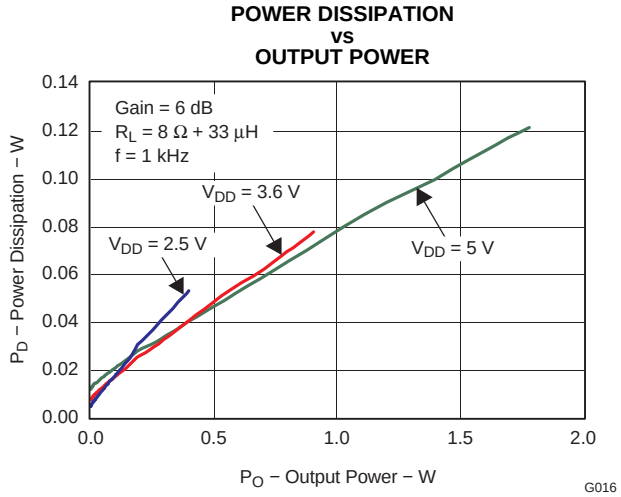

Figure 19.

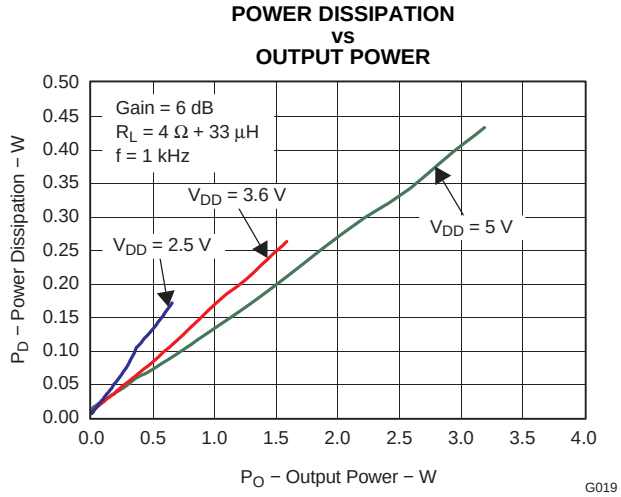

Figure 20.

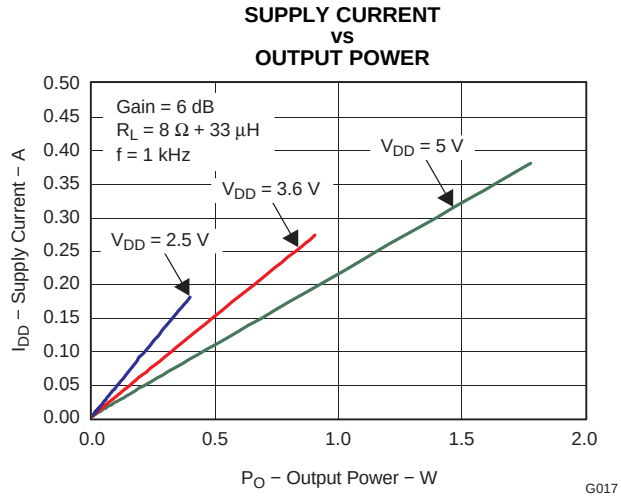

Figure 21.

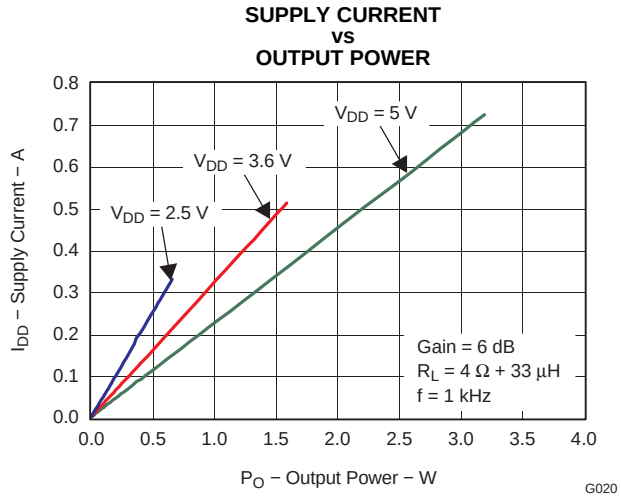

Figure 22.

Copyright © 2009, Texas Instruments Incorporated

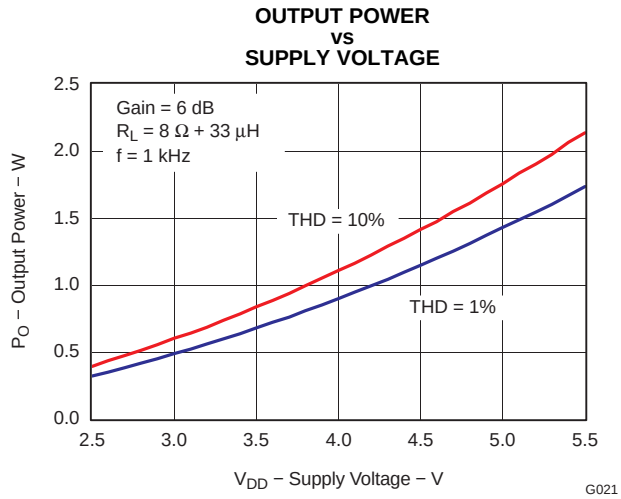

Figure 23.

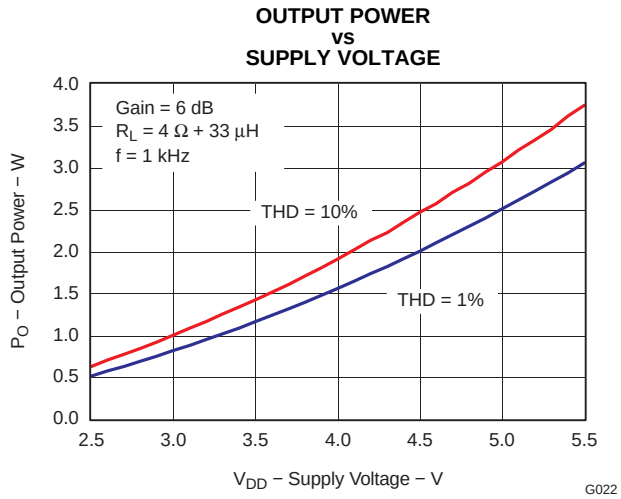

Figure 24.

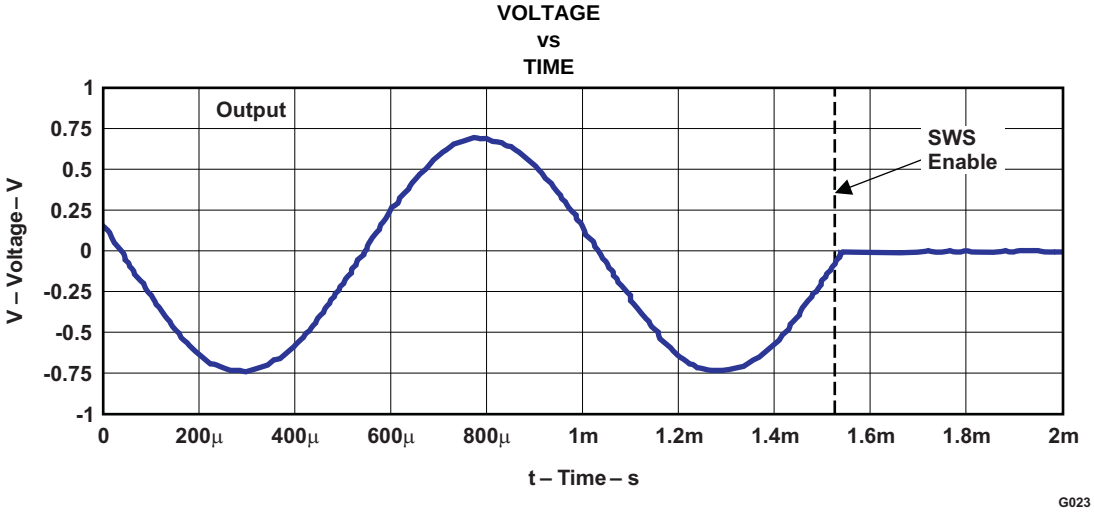

Figure 25. Shutdown Time

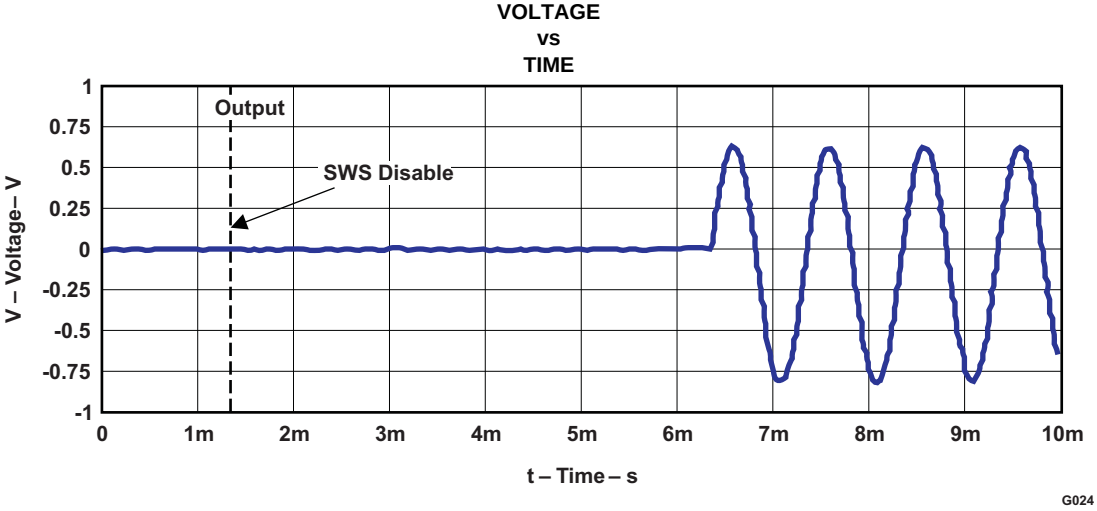

Figure 26. Startup Time

APPLICATION INFORMATION

AUTOMATIC GAIN CONTROL

The Automatic Gain Control (AGC) feature provides continuous automatic gain adjustment to the amplifier through an internal PGA. This feature enhances the perceived audio loudness and at the same time prevents speaker damage from occurring (Limiter function).

The AGC function attempts to maintain the audio signal gain as selected by the user through the Fixed Gain, Limiter Level, and Compression Ratio variables. Other advanced features included are Maximum Gain and Noise Gate Threshold. Table 1 describes the function of each variable in the AGC function.

Table 1. TPA2018D1 AGC Variable Descriptions

VARIABLE	DESCRIPTION
Maximum Gain	The gain at the lower end of the compression region.
Fixed Gain	The normal gain of the device when the AGC is inactive. The fixed gain is also the initial gain when the device comes out of shutdown mode or when the AGC is disabled.
Limiter Level	The value that sets the maximum allowed output amplitude.
Compression Ratio	The relation between input and output voltage.
Noise Gate Threshold	Below this value, the AGC holds the gain to prevent breathing effects.
Attack Time	The minimum time between two gain decrements.
Release Time	The minimum time between two gain increments.
Hold Time	The time it takes for the very first gain increment after the input signal amplitude decreases.

Copyright © 2009, Texas Instruments Incorporated

The AGC works by detecting the audio input envelope. The gain changes depending on the amplitude, the limiter level, the compression ratio, and the attack and release time. The gain changes constantly as the audio signal increases and/or decreases to create the compression effect. The gain step size for the AGC is 0.5 dB. If the audio signal has near-constant amplitude, the gain does not change. Figure 27 shows how the AGC works.

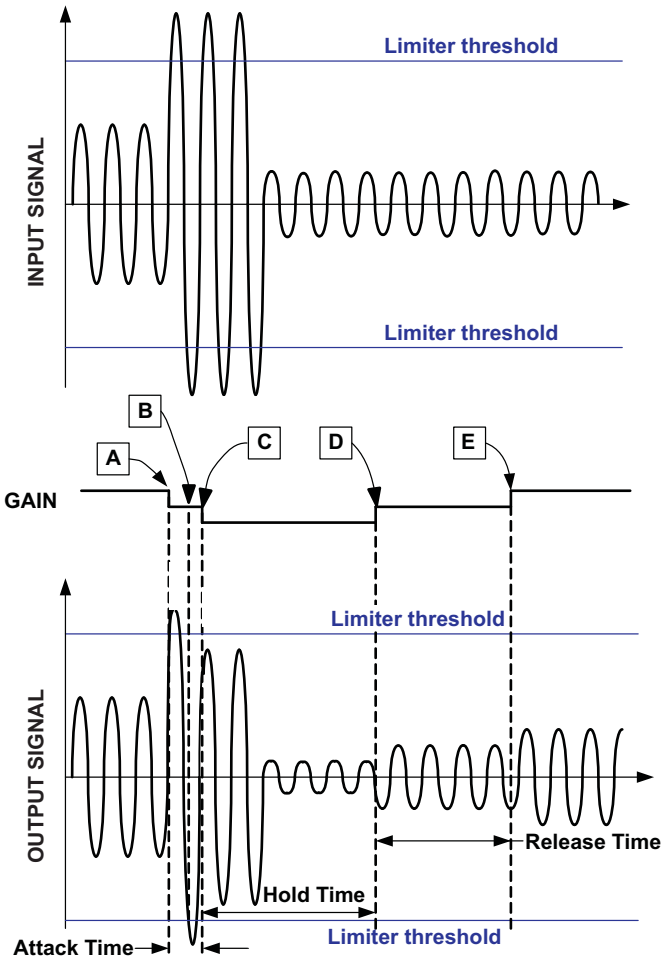

A. Gain decreases with no delay; attack time is reset. Release time and hold time are reset.

B. Signal amplitude above limiter level, but gain cannot change because attack time is not over.

C. Attack time ends; gain is allowed to decrease from this point forward by one step. Gain decreases because the amplitude remains above limiter threshold. All times are reset

D. Gain increases after release time finishes and signal amplitude remains below desired level. All times are reset after the gain increase.

E. Gain increases after release time is finished again because signal amplitude remains below desired level. All times are reset after the gain increase.

Figure 27. Input and Output Audio Signal vs Time

Since the number of gain steps is limited the compression region is limited as well. The following figure shows how the gain changes vs. the input signal amplitude in the compression region.

Copyright © 2009, Texas Instruments Incorporated

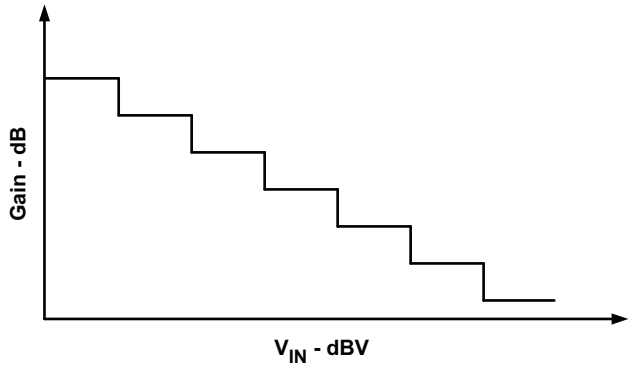

Figure 28. Input Signal Voltage vs Gain

Thus the AGC performs a mapping of the input signal vs. the output signal amplitude. This mapping can be modified according to the variables from Table 1.

The following graphs and explanations show the effect of each variable to the AGC independently and which considerations should be taken when choosing values.

Fixed Gain: The fixed gain determines the initial gain of the AGC. Set the gain using the following variables:

- Set the fixed gain to be equal to the gain when the AGC is disabled.
- Set the fixed gain to maximize SNR.
- Set the fixed gain such that it will not overdrive the speaker.

Figure 29 shows how the fixed gain influences the input signal amplitude vs. the output signal amplitude state diagram. The dotted 1:1 line is displayed for reference. The 1:1 line means that for a 1dB increase in the input signal, the output increases by 1dB.

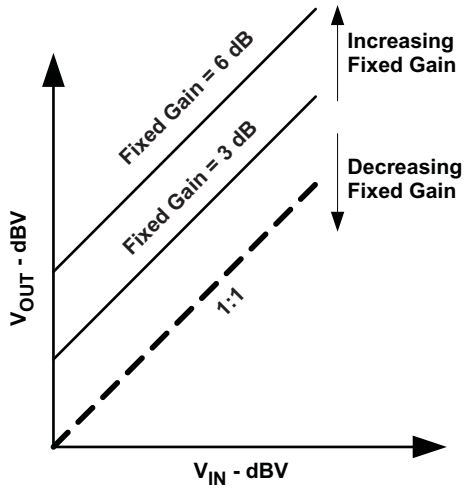

Figure 29. Output Signal vs Input Signal State Diagram Showing Different Fixed Gain Configurations

If the Compression function is enabled, the Fixed Gain is adjustable from –28dB to 30dB. If the Compression function is disabled, the Fixed gain is adjustable from 0dB to 30dB.

Limiter Level: The Limiter level sets the maximum amplitude allowed at the output of the amplifier. The limiter should be set with the following constraints in mind:

- Below or at the maximum power rating of the speaker
- Below the minimum supply voltage in order to avoid clipping

Figure 30 shows how the limiter level influences the input signal amplitude vs. the output signal amplitude state diagram.

Copyright © 2009, Texas Instruments Incorporated

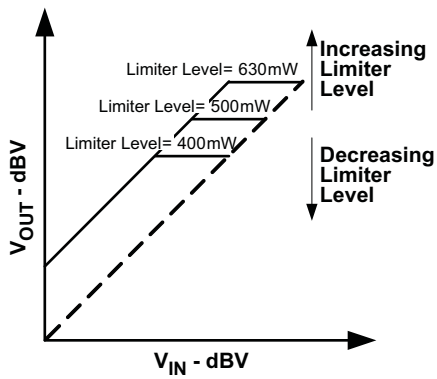

Figure 30. Output Signal vs Input Signal State Diagram Showing Different Limiter Level Configurations

The limiter level and the fixed gain influence each other. If the fixed gain is set high, the AGC has a large limiter range. The fixed gain is set low, the AGC has a short limiter range. Figure 31 illustrates the two examples:

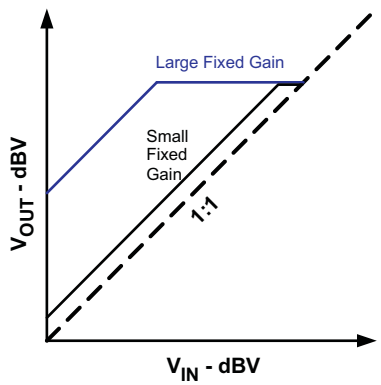

Figure 31. Output Signal vs. Input Signal State Diagram Showing Same Limiter Level Configurations with Different Fixed Gain Configurations

Compression Ratio: The compression ratio sets the relation between input and output signal outside the limiter level region. The compression ratio compresses the dynamic range of the audio. For example if the audio source has a dynamic range of 60dB and compression ratio of 2:1 is selected, then the output has a dynamic range of 30dB. Most small form factor speakers have small dynamic range. Compression ratio allows audio with large dynamic range to fit into a speaker with small dynamic range.

The compression ratio also increases the loudness of the audio without increasing the peak voltage. The higher the compression ratio, the louder the perceived audio.

For example:

- A compression ratio of 4:1 is selected (meaning that a 4dB change in the input signal results in a 1dB signal change at the output)
- A fixed gain of 0dB is selected and the maximum audio level is at 0dBV.

When the input signal decreases to –32dBV, the amplifier increases the gain to 24dB in order to achieve an output of –8dBV. The output signal amplitude equation is:

$$\text{Output signal amplitude} = \frac{\text{Input signal initial amplitude - |Current input signal amplitude|}}{\text{Compression ratio}} \quad (1)$$

In this example:

$$-8\text{dBV} = \frac{0\text{dBV} - |-32\text{ dBV}|}{4} \quad (2)$$

Copyright © 2009, Texas Instruments Incorporated

The gain change equation is:

$$\text{Gain change} = \left(1 - \frac{1}{\text{Compression ratio}}\right) \times \text{Input signal change} \tag{3}$$

$$24\ \text{dB} = \left(1 - \frac{1}{4}\right) \times 32 \tag{4}$$

Consider the following when setting the compression ratio:

- Dynamic range of the speaker
- Fixed gain level
- Limiter Level
- Audio Loudness vs Output Dynamic Range.

Figure 32 shows different settings for dynamic range and different fixed gain selected but no limiter level.

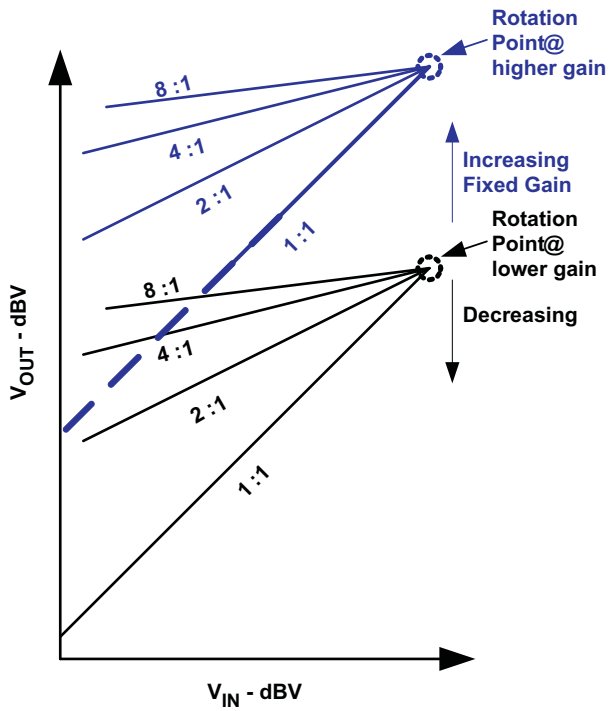

Figure 32. Output Signal vs Input Signal State Diagram Showing Different Compression Ratio Configurations with Different Fixed Gain Configurations

The rotation point is always at Vin = 10dBV. The rotation point is not located at the intersection of the limiter region and the compression region. By changing the fixed gain the rotation point will move in the y-axis direction only, as shown in the previous graph.

Interaction between compression ratio and limiter range: The compression ratio can be limited by the limiter range. Note that the limiter range is selected by the limiter level and the fixed gain.

For a setting with large limiter range, the amount of gain steps in the AGC remaining to perform compression are limited. Figure 33 shows two examples, where the fixed gain was changed.

1. Small limiter range yielding a large compression region (small fixed gain).
2. Large limiter range yielding a small compression region (large fixed gain).

Copyright © 2009, Texas Instruments Incorporated

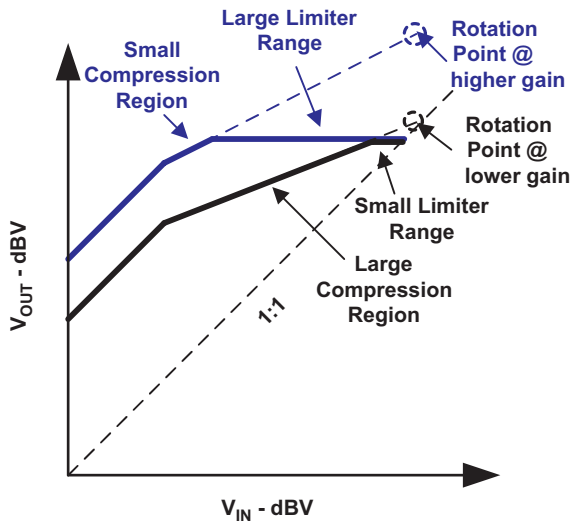

Figure 33. Output Signal vs Input Signal State Diagram Showing the Effects of the Limiter Range to the Compression Region

Noise Gate Threshold: The noise gate threshold prevents the AGC from changing the gain when there is no audio at the input of the amplifier. The noise gate threshold stops gain changes until the input signal is above the noise gate threshold. Select the noise gate threshold to be above the noise but below the minimum audio at the input of the amplifier signal. A filter is needed between delta-sigma CODEC/DAC and TPA2018D1 for effectiveness of the noise gate function. The filter eliminates the out-of-band noise from delta-sigma modulation and keeps the CODEC/DAC output noise lower than the noise gate threshold.

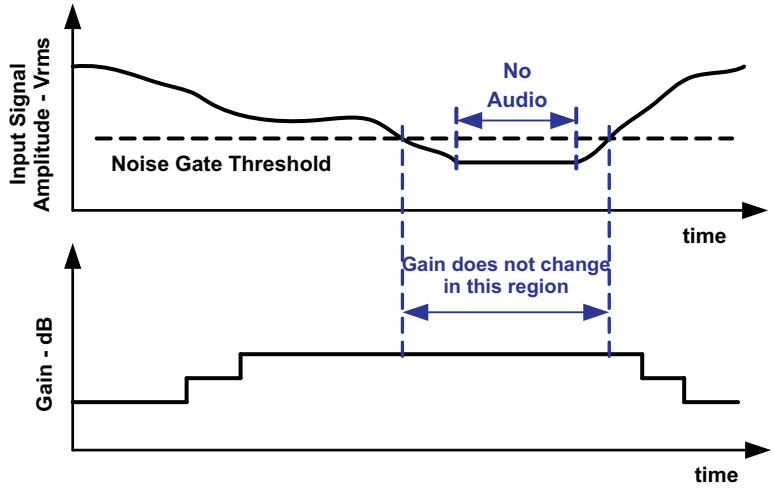

Figure 34. Time Diagram Showing the Relationship Between Input Signal Amplitude, Noise Gate Threshold and Gain Versus Time

Maximum Gain: This variable limits the number of gain steps in the AGC. This feature is useful in order to accomplish a more advanced output signal vs. input signal transfer characteristic.

For example, to prevent the gain from going above a certain value, reduce the maximum gain.

However, this variable will affect the limiter range and the compression region. If the maximum gain is decreased, the limiter range and/or compression region is reduced. Figure 35 illustrates the effects.

Copyright © 2009, Texas Instruments Incorporated

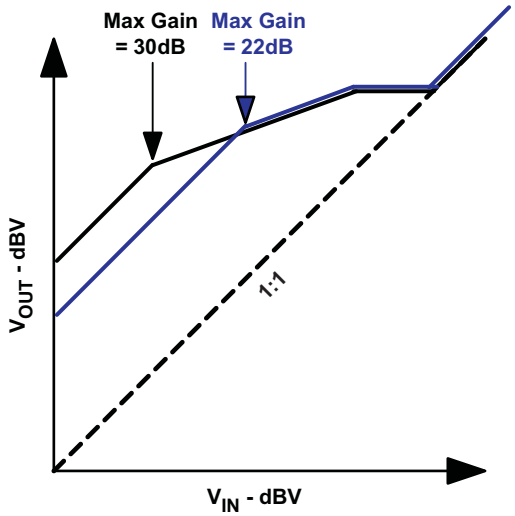

Figure 35. Output Signal vs. Input Signal State Diagram Showing Different Maximum Gains

A particular application requiring maximum gain of 22dB, for example. Thus, set the maximum gain at 22dB. The amplifier gain will never have a gain higher than 22dB; however, this will reduce the limiter range.

Attack, Release, and Hold time:

- The attack time is the minimum time between gain decreases.
- The release time is the minimum time between gain increases.
- The hold time is the minimum time between a gain decrease (attack) and a gain increase (release). The hold time can be deactivated. Hold time is only valid if greater than release time.

Successive gain decreases are never faster than the attack time. Successive gain increases are never faster than the release time.

All time variables (attack, release and hold) start counting after each gain change performed by the AGC. The AGC is allowed to decrease the gain (attack) only after the attack time finishes. The AGC is allowed to increase the gain (release) only after the release time finishes counting. However, if the preceding gain change was an attack (gain increase) and the hold time is enabled and longer than the release time, then the gain is only increased after the hold time.

The hold time is only enabled after a gain decrease (attack). The hold time replaces the release time after a gain decrease (attack). If the gain needs to be increased further, then the release time is used. The release time is used instead of the hold time if the hold time is disabled.

The attack time should be at least 100 times shorter than the release and hold time. The hold time should be the same or greater than the release time. It is important to select reasonable values for those variables in order to prevent the gain from changing too often or too slow.

Figure 36 illustrates the relationship between the three time variables.

Copyright © 2009, Texas Instruments Incorporated

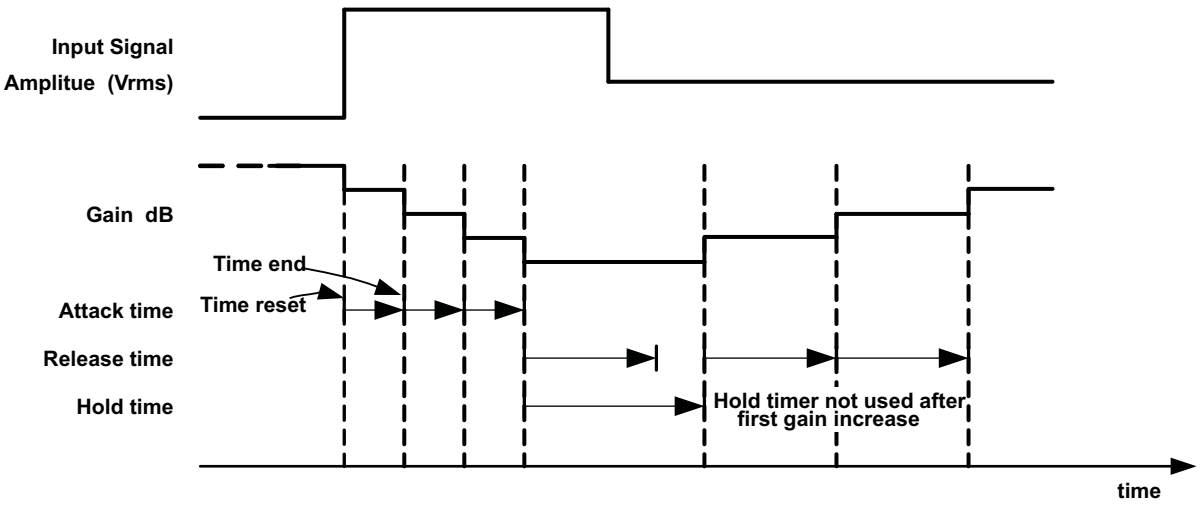

Figure 36. Time Diagram Showing the Relation Between the Attack, Release, and Hold Time vs Input Signal Amplitude and Gain

Figure 37 shows a state diagram of the input signal amplitude vs. the output signal amplitude and a summary of how the variables from table 1 described in the preceding pages affect them.

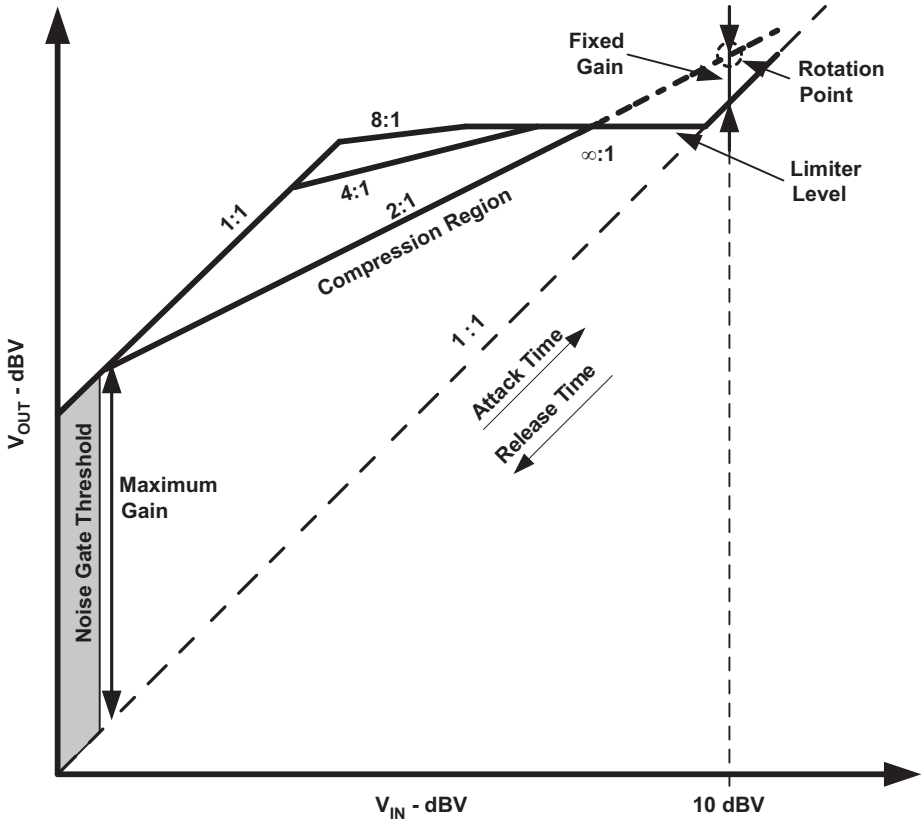

Figure 37. Output Signal vs. Input Signal State Diagram

TPA2018D1 AGC AND START-UP OPERATION

The TPA2018D1 is controlled by the I^2C interface. The correct start-up sequence is:

1. Apply the supply voltage to the PV_{DD} pin.
2. Apply a voltage above V_{IH} to the EN pin. The TPA2018D1 powers up the I^2C interface and the control logic. I^2C registers are reset to default value. By default, the device is in active mode (SWS = 0). After 5 ms the amplifier will enable the class-D output stage and become fully operational.
3. The default noise gate function of TPA2018D1 is on. The amplifier starts at 0 dB gain until input signal is higher than noise gate threshold. Then AGC starts ramping the gain according to the release time. The shorter the release time is, the faster the gain reaches its final value.
4. During software shutdown, the amplifier gain is set at 0 dB. After software shutdown is removed, the gain ramps from 0 dB according to released time.
5. At shutdown, the gain ramps down according to attack time. The longer the attack time is, the longer it takes the amplifier to shutdown.

CAUTION:

Do not interrupt the start-up sequence after changing EN from V_{IL} to V_{IH}.

Do not interrupt the start-up sequence after changing SWS from 1 to 0.

The default conditions of TPA2018D1 allows audio playback without I2C control. Refer to Table 4 for entire default conditions.

There are several options to disable the amplifier:

- Write SPK_EN = 0 to the register (0x01, 6). This write disables each speaker amplifier, but leaves all other circuits operating.
- Write SWS = 1 to the register (0x01, 5). This action disables most of the amplifier functions.
- Apply V_{IL} to EN. This action shuts down all the circuits and has very low quiescent current consumption. This action resets the registers to its default values.

CAUTION:

Do not interrupt the shutdown sequence after changing EN from V_{IH} to V_{IL}.

Do not interrupt the shutdown sequence after changing SWS from 0 to 1.

TPA2018D1 AGC RECOMMENDED SETTINGS

Table 2. Recommended AGC Settings for Different Types of Audio Source (V_{DD} = 3.6V)

AUDIO SOURCE	COMPRESSION RATIO	ATTACK TIME (ms/6 dB)	RELEASE TIME (ms/6 dB)	HOLD TIME (ms)	FIXED GAIN (dB)	LIMITER LEVEL (dBV)
Pop Music	4:1	1.28 to 3.84	986 to 1640	137	6	7.5
Classical	2:1	2.56	1150	137	6	8
Jazz	2:1	5.12 to 10.2	3288	—	6	8
Rap/ Hip Hop	4:1	1.28 to 3.84	1640	—	6	7.5
Rock	2:1	3.84	4110	—	6	8
Voice/ News	4:1	2.56	1640	—	6	8.5

GENERAL I^2C OPERATION

The I^2C bus employs two signals, SDA (data) and SCL (clock), to communicate between integrated circuits in a system. The bus transfers data serially one bit at a time. The address and data 8-bit bytes are transferred most significant bit (MSB) first. In addition, each byte transferred on the bus is acknowledged by the receiving device with an *acknowledge* bit. Each transfer operation begins with the master device driving a start condition on the bus and ends with the master device driving a stop condition on the bus. The bus uses transitions on the data terminal (SDA) while the clock is at logic high to indicate start and stop conditions. A high-to-low transition on

Copyright © 2009, Texas Instruments Incorporated

SDA indicates a start and a low-to-high transition indicates a stop. Normal data-bit transitions must occur within the low time of the clock period. Figure 38 shows a typical sequence. The master generates the 7-bit slave address and the read/write (R/W) bit to open communication with another device, and then waits for an acknowledge condition. The TPA2018D1 holds SDA low during the acknowledge clock period to indicate acknowledgment. When this acknowledgment occurs, the master transmits the next byte of the sequence. Each device is addressed by a unique 7-bit slave address plus R/W bit (1 byte). All compatible devices share the same signals via a bidirectional bus using a wired-AND connection.

An external pull-up resistor must be used for the SDA and SCL signals to set the logic high level for the bus.

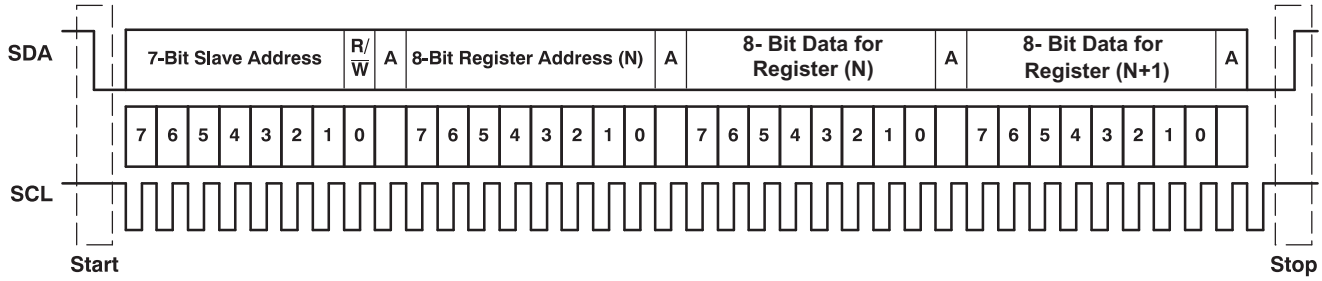

Figure 38. Typical I²C Sequence

There is no limit on the number of bytes that can be transmitted between start and stop conditions. When the last word transfers, the master generates a stop condition to release the bus. A generic data transfer sequence is shown in Figure 38.

SINGLE-AND MULTIPLE-BYTE TRANSFERS

The serial control interface supports both single-byte and multi-byte read/write operations for all registers.

During multiple-byte read operations, the TPA2018D1 responds with data, one byte at a time, starting at the register assigned, as long as the master device continues to respond with acknowledgments.

The TPA2018D1 supports sequential I²C addressing. For write transactions, if a register is issued followed by data for that register and all the remaining registers that follow, a sequential I²C write transaction has occurred. For I²C sequential write transactions, the register issued then serves as the starting point, and the amount of data subsequently transmitted, before a stop or start is transmitted, determines the number of registers written.

SINGLE-BYTE WRITE

As Figure 39 shows, a single-byte data write transfer begins with the master device transmitting a start condition followed by the I²C device address and the read/write bit. The read/write bit determines the direction of the data transfer. For a write data transfer, the read/write bit must be set to '0'. After receiving the correct I²C device address and the read/write bit, the TPA2018D1 responds with an acknowledge bit. Next, the master transmits the register byte corresponding to the TPA2018D1 internal memory address being accessed. After receiving the register byte, the TPA2018D1 again responds with an acknowledge bit. Next, the master device transmits the data byte to be written to the memory address being accessed. After receiving the register byte, the TPA2018D1 again responds with an acknowledge bit. Finally, the master device transmits a stop condition to complete the single-byte data write transfer.

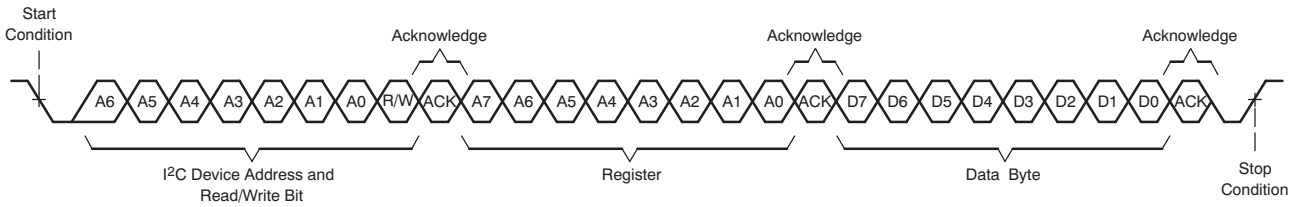

Figure 39. Single-Byte Write Transfer

Copyright © 2009, Texas Instruments Incorporated

MULTIPLE-BYTE WRITE AND INCREMENTAL MULTIPLE-BYTE WRITE

A multiple-byte data write transfer is identical to a single-byte data write transfer except that multiple data bytes are transmitted by the master device to the TPA2018D1 as shown in Figure 40. After receiving each data byte, the TPA2018D1 responds with an acknowledge bit.

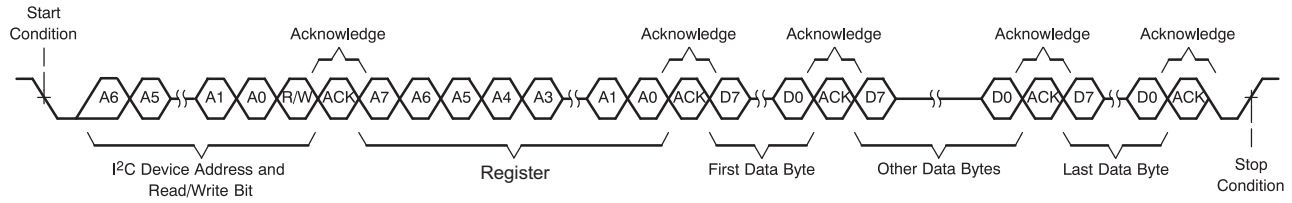

Figure 40. Multiple-Byte Write Transfer

SINGLE-BYTE READ

As Figure 41 shows, a single-byte data read transfer begins with the master device transmitting a start condition followed by the I^{2}C device address and the read/write bit. For the data read transfer, both a write followed by a read are actually executed. Initially, a write is executed to transfer the address byte of the internal memory address to be read. As a result, the read/write bit is set to a '0'.

After receiving the TPA2018D1 address and the read/write bit, the TPA2018D1 responds with an acknowledge bit. The master then sends the internal memory address byte, after which the TPA2018D1 issues an acknowledge bit. The master device transmits another start condition followed by the TPA2018D1 address and the read/write bit again. This time the read/write bit is set to '1', indicating a read transfer. Next, the TPA2018D1 transmits the data byte from the memory address being read. After receiving the data byte, the master device transmits a *not-acknowledge* followed by a stop condition to complete the single-byte data read transfer.

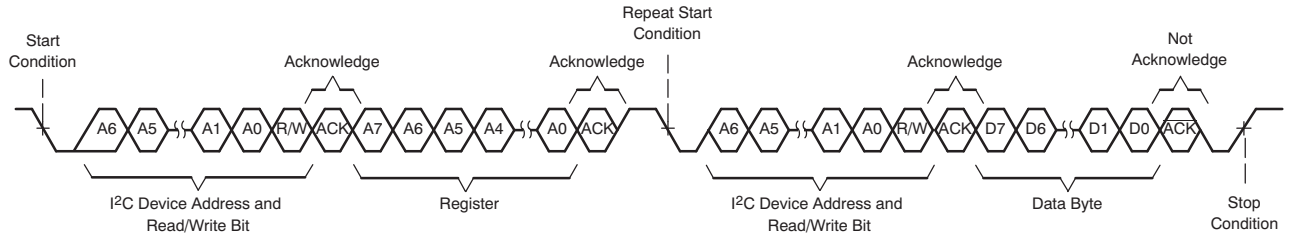

Figure 41. Single-Byte Read Transfer

MULTIPLE-BYTE READ

A multiple-byte data read transfer is identical to a single-byte data read transfer except that multiple data bytes are transmitted by the TPA2018D1 to the master device as shown in Figure 42. With the exception of the last data byte, the master device responds with an acknowledge bit after receiving each data byte.

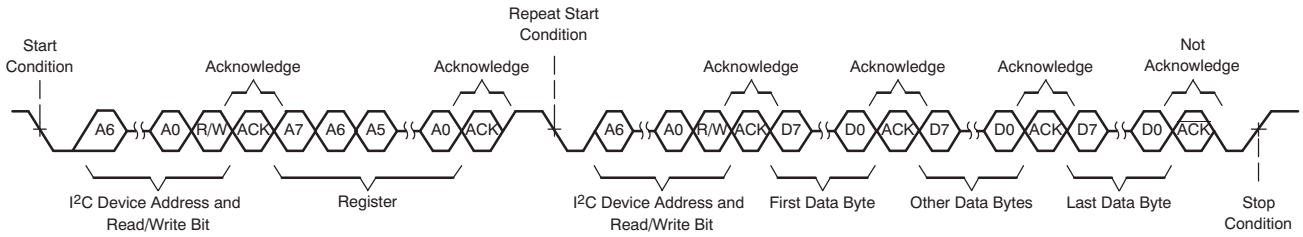

Figure 42. Multiple-Byte Read Transfer

Copyright © 2009, Texas Instruments Incorporated

Register Map

Table 3. TPA2018D1 Register Map

Register	Bit7	Bit6	Bit5	Bit4	Bit3	Bit2	Bit1	Bit0
1	0	SPK_EN	SWS	0	FAULT	Thermal	1	NG_EN
2	0	0	ATK_time [5]	ATK_time [4]	ATK_time [3]	ATK_time [2]	ATK_time [1]	ATK_time [0]
3	0	0	REL_time [5]	REL_time [4]	REL_time [3]	REL_time [2]	REL_time [1]	REL_time [0]
4	0	0	Hold_time [5]	Hold_time [4]	Hold_time [3]	Hold_time [2]	Hold_time [1]	Hold_time [0]
5	0	0	FixedGain [5]	FixedGain [4]	FixedGain [3]	FixedGain [2]	FixedGain [1]	FixedGain [0]
6	Output Limiter Disable	NoiseGate Threshold [1]	NoiseGate Threshold [2]	Output Limiter Level [4]	Output Limiter Level [3]	Output Limiter Level [2]	Output Limiter Level [1]	Output Limiter Level [0]
7	Max Gain [3]	Max Gain [2]	Max Gain [1]	Max Gain [0]	0	0	Compression Ratio [1]	Compression Ratio [0]

The default register map values are given in Table 4.

Table 4. TPA2018D1 Default Register Values Table

Register	0x01	0x02	0x03	0x04	0x05	0x06	0x07
Default	C3h	05h	0Bh	00h	06h	3Ah	C2h

Any register above address 0x08 is reserved for testing and should not be written to because it may change the function of the device. If read, these bits may assume any value.

Some of the default values can be reprogrammed through the I^2C interface and written to the EEPROM. This function is useful to speed up the turn-on time of the device and minimizes the number of I^2C writes. If this is required, contact your local TI representative.

The TPA2018D1 I^2C address is 0xB0 (binary 10110000) for writing and 0xB1 (binary 10110001) for reading. If a different I^2C address is required, please contact your local TI representative. See the General I2C operation section for more detail.

The following tables show the details of the registers, the default values, and the values that can be programmed through the I^2C interface.

Copyright © 2009, Texas Instruments Incorporated

IC FUNCTION CONTROL (Address: 1)

REGISTER ADDRESS	I2C BIT	LABEL	DEFAULT	DESCRIPTION
01 (01_H) – IC Function Control	7	Unused	1	
	6	SPK_EN	1 (enabled)	Enables amplifier
	5	SWS	0 (enabled)	Shutdown IC when bit = 1
	4	Unused	0	
	3	FAULT	0	Changes to a 1 when there is a short on the left channel. Reset by writing a 0
	2	Thermal	0	Changes to a 1 when die temperature is above 150°C
	1	Unused	1	
	0	NG_EN	1 (enabled)	Enables Noise Gate function

SPK_EN: Enable bit for the audio amplifier channel. Amplifier is active when bit is high. This function is gated by thermal and returns once the IC is below the threshold temperature

SWS: Software shutdown control. The device is in software shutdown when the bit is '1' (control, bias and oscillator are inactive). When the bit is '0' the control, bias and oscillator are enabled.

Fault: This bit indicates that an over-current event has occurred on the channel with a '1'. This bit is cleared by writing a '0' to it.

Thermal: This bit indicates a thermal shutdown that was initiated by the hardware with a '1'. This bit is deglitched and latched, and can be cleared by writing a '0' to it.

NG_EN: Enable bit for the Noise Gate function. This function is enabled when this bit is high. This function can only be enabled when the Compression ratio is not 1:1.

AGC ATTACK CONTROL (Address: 2)

REGISTER ADDRESS	I^2C BIT	LABEL	DEFAULT	DESCRIPTION			
02 (02_H) – AGC Control	7:6	Unused	00				
	5:0	ATK_time	000101 (6.4 ms/6 dB)	AGC Attack time (gain ramp down)			
					Per Step	Per 6 dB	90% Range
				000001	0.1067 ms	1.28 ms	5.76 ms
				000010	0.2134 ms	2.56 ms	11.52 ms
				000011	0.3201 ms	3.84 ms	17.19 ms
				000100	0.4268 ms	5.12 ms	23.04 ms
				(time increases by 0.1067 ms with every step)			
				111111	6.722 ms	80.66 ms	362.99 ms

ATK_time These bits set the attack time for the AGC function. The attack time is the minimum time between gain decreases.

Copyright © 2009, Texas Instruments Incorporated

AGC RELEASE CONTROL (Address: 3)

REGISTER ADDRESS	I²C BIT	LABEL	DEFAULT	DESCRIPTION			
03 (03_H) – AGC Release Control	7:6	Unused	00				
	5:0	REL_time	001011 (1.81 sec/6 dB)	AGC Release time (gain ramp down)			
					Per Step	Per 6 dB	90% Range
				000001	0.0137 s	0.1644 s	0.7398 s
				000010	0.0274 s	0.3288 s	1.4796 s
				000011	0.0411 s	0.4932 s	2.2194 s
				000100	0.0548 s	0.6576 s	2.9592 s
				(time increases by 0.0137 s with every step)			
				111111	0.8631 s	10.36 s	46.6 s

REL_time These bits set the release time for the AGC function. The release time is the minimum time between gain increases.

AGC HOLD TIME CONTROL (Address: 4)

REGISTER ADDRESS	I²C BIT	LABEL	DEFAULT	DESCRIPTION		
04 (04_H) – AGC Hold Time Control	7:6	Unused	00			
	5:0	Hold_time	000000 (Disabled)	AGC Hold time		
						Per Step
					000000	Hold Time Disable
					000001	0.0137 s
					000010	0.0274 s
					000011	0.0411 s
					000100	0.0548 s
					(time increases by 0.0137 s with every step)	
					111111	0.8631 s

Hold_time These bits set the hold time for the AGC function. The hold time is the minimum time between a gain decrease (attack) and a gain increase (release). The hold time can be deactivated.

Copyright © 2009, Texas Instruments Incorporated

AGC FIXED GAIN CONTROL (Address: 5)

REGISTER ADDRESS	I²C BIT	LABEL	DEFAULT	DESCRIPTION		
05 (05_H) – AGC Fixed Gain Control	7:6	UNUSED	00			
	5:0	Fixed Gain	00110 (6dB)	Sets the fixed gain of the amplifier: two's compliment		
						Gain
					100100	–28 dB
					100101	–27 dB
					100110	–26 dB
				(gain increases by 1 dB with every step)		
					111101	–3 dB
					111110	–2 dB
					111111	–1 dB
					000000	0 dB
					000001	1 dB
					000010	2 dB
					000011	3 dB
				(gain increases by 1dB with every step)		
					011100	28 dB
					011101	29 dB
					011110	30 dB

Fixed Gain These bits are used to select the fixed gain of the amplifier. If the Compression is enabled, fixed gain is adjustable from –28dB to 30dB. If the Compression is disabled, fixed gain is adjustable from 0dB to 30dB.

Copyright © 2009, Texas Instruments Incorporated

AGC CONTROL (Address: 6)

REGISTER ADDRESS	I²C BIT	LABEL	DEFAULT	DESCRIPTION			
06 (06_H) – AGC Control	7	Output Limiter Disable	0 (enable)	Disables the output limiter function. Can only be disabled when the AGC compression ratio is 1:1 (off)			
	6:5	NoiseGate Threshold	01 (4 mV_{rms})	Select the threshold of the noise gate			
							Threshold
						00	1 mV_{rms}
						01	4 mV_{rms}
						10	10 mV_{rms}
						11	20 mV_{rms}
	4:0	Output Limiter Level	11010 (6.5dBV)	Selects the output limiter level			
					Output Power (Wrms)	Peak Output Voltage (Vp)	dBV
				00000	0.03	0.67	–6.5
				00001	0.03	0.71	–6
				00010	0.04	0.75	–5.5
				(Limiter level increases by 0.5dB with every step)			
				11101	0.79	3.55	8
				11110	0.88	3.76	8.5
				11111	0.99	3.99	9

Output Limiter Disable This bit disables the output limiter function when set to 1. Can only be disabled when the AGC compression ratio is 1:1

NoiseGate Threshold These bits set the threshold level of the noise gate. NoiseGate Threshold is only functional when the compression ratio is not 1:1

Output Limiter Level These bits select the output limiter level. Output Power numbers are for 8Ω load.

AGC CONTROL (Address: 7)

REGISTER ADDRESS	I²C BIT	LABEL	DEFAULT	DESCRIPTION		
07 (07_H) – AGC Control	7:4	Max Gain	1100 (30 dB)	Selects the maximum gain the AGC can achieve		
						Gain
					0000	18 dB
					0001	19 dB
					0010	20 dB
				(gain increases by 1 dB with every step)		
					1100	30 dB
	3:2	UNUSED	00			
	1:0	Compression Ratio	10 (4:1)	Selects the compression ratio of the AGC		
						Ratio
					00	1:1 (off)
					01	2:1
					10	4:1
					11	8:1

Compression Ratio These bits select the compression ratio. Output Limiter is enabled by default when the compression ratio is not 1:1.

Max Gain These bits select the maximum gain of the amplifier. In order to maximize the use of the AGC, set the Max Gain to 30dB

Copyright © 2009, Texas Instruments Incorporated

DECOUPLING CAPACITOR C_S)

The TPA2018D1 is a high-performance Class-D audio amplifier that requires adequate power supply decoupling to ensure the efficiency is high and total harmonic distortion (THD) is low. For higher frequency transients, spikes, or digital hash on the line, a good low equivalent-series-resistance (ESR) 1-µF ceramic capacitor (typically) placed as close as possible to the device PVDD lead works best. Placing this decoupling capacitor close to the TPA2018D1 is important for the efficiency of the Class-D amplifier, because any resistance or inductance in the trace between the device and the capacitor can cause a loss in efficiency. For filtering lower-frequency noise signals, a 4.7 µF or greater capacitor placed near the audio power amplifier would also help, but it is not required in most applications because of the high PSRR of this device.

INPUT CAPACITORS C_I)

TPA2018D1 requires input capacitors to ensure low output offset and low pop.

The input capacitors and input resistors form a high-pass filter with the corner frequency, f_C, determined in Equation 5.

$$f_C = \frac{1}{(2\pi \times R_I \times C_I)} \tag{5}$$

The value of the input capacitor is important to consider as it directly affects the bass (low frequency) performance of the circuit. Speakers in wireless phones cannot usually respond well to low frequencies, so the corner frequency can be set to block low frequencies in this application. Not using input capacitors can increase output offset. Equation 6 is used to solve for the input coupling capacitance. If the corner frequency is within the audio band, the capacitors should have a tolerance of ±10% or better, because any mismatch in capacitance causes an impedance mismatch at the corner frequency and below.

$$C_I = \frac{1}{(2\pi \times R_I \times f_C)} \tag{6}$$

PACKAGE INFORMATION

Package Dimensions

The package dimensions for this YZF package are shown in the table below. See the package drawing at the end of this data sheet for more details.

Table 5. YZF Package Dimensions

Packaged Devices	D	E
TPA2018D1YZF	Min = 1594µm Max = 1654µm	Min = 1594µm Max = 1654µm

BOARD LAYOUT

In making the pad size for the WCSP balls, it is recommended that the layout use non solder mask defined (NSMD) land. With this method, the solder mask opening is made larger than the desired land area, and the opening size is defined by the copper pad width. Figure 43 and Table 6 shows the appropriate diameters for a WCSP layout. The TPA2018D1 evaluation module (EVM) layout is shown in the next section as a layout example.

Copyright © 2009, Texas Instruments Incorporated

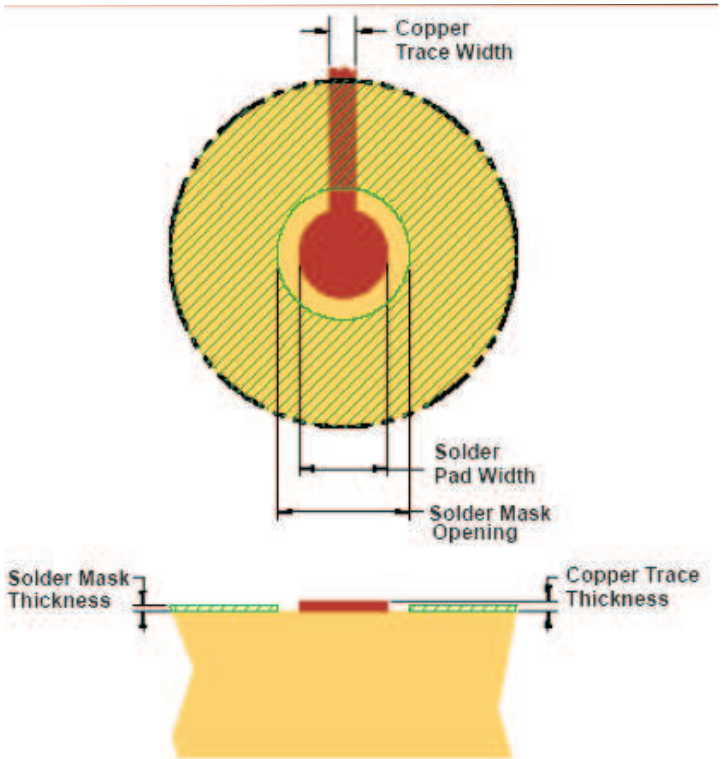

Figure 43. Land Pattern Dimensions

Table 6. Land Pattern Dimensions(1) (2) (3) (4)

SOLDER PAD DEFINITIONS	COPPER PAD	SOLDER MASK(5) OPENING	COPPER THICKNESS	STENCIL(6) (7) OPENING	STENCIL THICKNESS
Non solder mask defined (NSMD)	275 µm (+0.0, –25 µm)	375 µm (+0.0, –25 µm)	1 oz max (32 µm)	275 µm × 275 µm Sq. (rounded corners)	125 µm thick

(1) Circuit traces from NSMD defined PWB lands should be 75 µm to 100 µm wide in the exposed area inside the solder mask opening. Wider trace widths reduce device stand off and impact reliability.
(2) Best reliability results are achieved when the PWB laminate glass transition temperature is above the operating the range of the intended application.
(3) Recommend solder paste is Type 3 or Type 4.
(4) For a PWB using a Ni/Au surface finish, the gold thickness should be less 0.5 mm to avoid a reduction in thermal fatigue performance.
(5) Solder mask thickness should be less than 20 µm on top of the copper circuit pattern
(6) Best solder stencil performance is achieved using laser cut stencils with electro polishing. Use of chemically etched stencils results in inferior solder paste volume control.
(7) Trace routing away from WCSP device should be balanced in X and Y directions to avoid unintentional component movement due to solder wetting forces.

COMPONENT LOCATION

Place all the external components very close to the TPA2018D1. Placing the decoupling capacitor, C_S, close to the TPA2018D1 is important for the efficiency of the Class-D amplifier. Any resistance or inductance in the trace between the device and the capacitor can cause a loss in efficiency.

TRACE WIDTH

Recommended trace width at the solder balls is 75 µm to 100 µm to prevent solder wicking onto wider PCB traces. For high current pins (PVDD (L, R), PGND, and audio output pins) of the TPA2018D1, use 100-µm trace widths at the solder balls and at least 500-µm PCB traces to ensure proper performance and output power for the device. For the remaining signals of the TPA2018D1, use 75-µm to 100-µm trace widths at the solder balls. The audio input pins (INR± and INL±) must run side-by-side to maximize common-mode noise cancellation

Copyright © 2009, Texas Instruments Incorporated

EFFICIENCY AND THERMAL INFORMATION

The maximum ambient temperature depends on the heat-sinking ability of the PCB system. The derating factor for the packages are shown in the dissipation rating table. Converting this to θ_{JA} for the WCSP package:

$$\theta_{JA} = \frac{1}{\text{Derating Factor}} = \frac{1}{0.01} = 105°C/W \quad (7)$$

Given θ_{JA} of 105°C/W, the maximum allowable junction temperature of 150°C, and the maximum internal dissipation of 0.4 W for 3 W output power, 4-Ω load, 5-V supply, from Figure 17, the maximum ambient temperature can be calculated with the following equation.

$$T_A Max = T_J Max - \theta_{JA} P_{DMAX} = 150 - 105\ (0.4) = 108°C \quad (8)$$

Equation 8 shows that the calculated maximum ambient temperature is 108°C at maximum power dissipation with a 5-V supply and 4-Ω a load. The TPA2018D1 is designed with thermal protection that turns the device off when the junction temperature surpasses 150°C to prevent damage to the IC. Also, using speakers more resistive than 8-Ω dramatically increases the thermal performance by reducing the output current and increasing the efficiency of the amplifier.

OPERATION WITH DACS AND CODECS

In using Class-D amplifiers with CODECs and DACs, sometimes there is an increase in the output noise floor from the audio amplifier. This occurs when mixing of the output frequencies of the CODEC/DAC mix with the switching frequencies of the audio amplifier input stage. The noise increase can be solved by placing a low-pass filter between the CODEC/DAC and audio amplifier. This filters off the high frequencies that cause the problem and allow proper performance. See the functional block diagram.

SHORT CIRCUIT AUTO-RECOVERY

When a short circuit event happens, the TPA2018D1 goes to shutdown mode and tries to reactivate itself every 5 ms. This auto-recovery will continue until the short circuit event stops. This feature can protect the device without affecting the device's long term reliability. FAULT bit (register 1, bit 3) still requires a write to clear.

FILTER FREE OPERATION AND FERRITE BEAD FILTERS

A ferrite bead filter can often be used if the design is failing radiated emissions without an LC filter and the frequency sensitive circuit is greater than 1 MHz. This filter functions well for circuits that just have to pass FCC and CE because FCC and CE only test radiated emissions greater than 30 MHz. When choosing a ferrite bead, choose one with high impedance at high frequencies, and low impedance at low frequencies. In addition, select a ferrite bead with adequate current rating to prevent distortion of the output signal.

Use an LC output filter if there are low frequency (< 1 MHz) EMI sensitive circuits and/or there are long leads from amplifier to speaker. Figure 44 shows typical ferrite bead and LC output filters.

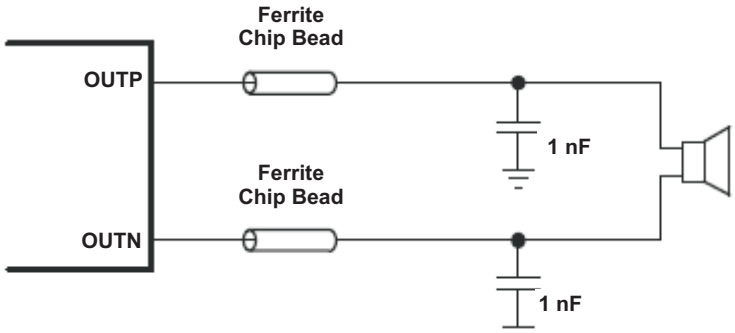

Figure 44. Typical Ferrite Bead Filter (Chip bead example: TDK: MPZ1608S221A)

Copyright © 2009, Texas Instruments Incorporated

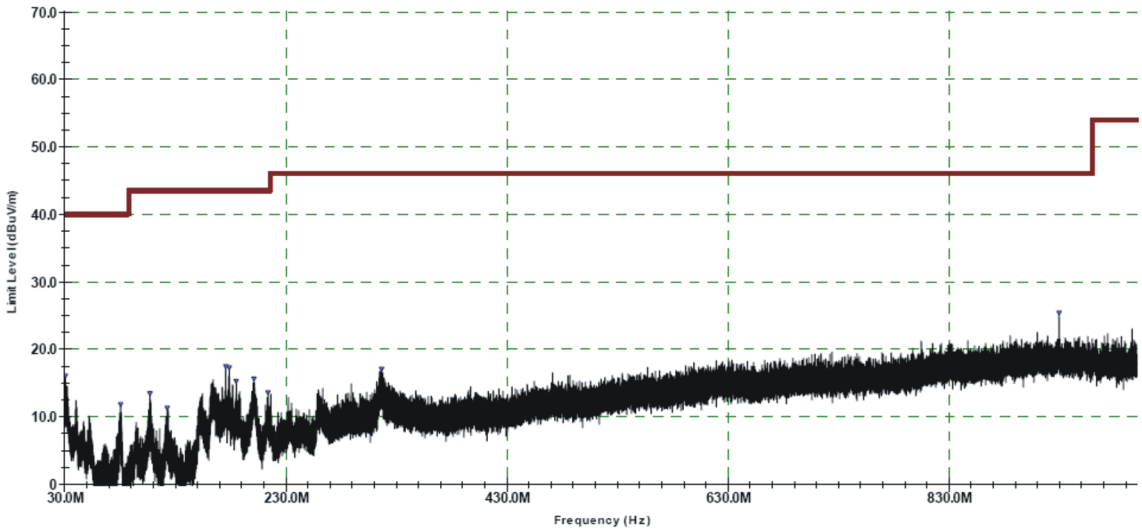

Figure 45. EMC Performance under FCC Class-B

Figure 45 shows the EMC performance of TPA2018D1 under FCC Class-B. The test circuit configuration is shown in Figure 44. The worst-case quasi peak margin is 29.8 dB at 30.5 MHz.

Table 7. Measurement Condition for TPA2018D1 EMC Test

PARAMETER		VALUE	UNIT
V_{DD}	Supply voltage	4.2	V
A_V	Gain	6	dB
f_{AUD}	Input signal frequency	1	kHz
V_I	Input signal amplitude	1	V_{RMS}
V_O	Output signal amplitude	2	V_{RMS}
R_L	Load impedance	8	Ω
	Output cable length	100	mm

Copyright © 2009, Texas Instruments Incorporated

PACKAGING INFORMATION

Orderable part number	Status (1)	Material type (2)	Package | Pins	Package qty | Carrier	RoHS (3)	Lead finish/ Ball material (4)	MSL rating/ Peak reflow (5)	Op temp (°C)	Part marking (6)
TPA2018D1YZFR	Active	Production	DSBGA (YZF) | 9	3000 | LARGE T&R	Yes	SNAGCU	Level-1-260C-UNLIM	-40 to 85	OBC
TPA2018D1YZFR.A	Active	Production	DSBGA (YZF) | 9	3000 | LARGE T&R	Yes	SNAGCU	Level-1-260C-UNLIM	-40 to 85	OBC
TPA2018D1YZFR.B	Active	Production	DSBGA (YZF) | 9	3000 | LARGE T&R	Yes	SNAGCU	Level-1-260C-UNLIM	-40 to 85	OBC
TPA2018D1YZFT	Active	Production	DSBGA (YZF) | 9	250 | SMALL T&R	Yes	SNAGCU	Level-1-260C-UNLIM	-40 to 85	OBC
TPA2018D1YZFT.A	Active	Production	DSBGA (YZF) | 9	250 | SMALL T&R	Yes	SNAGCU	Level-1-260C-UNLIM	-40 to 85	OBC
TPA2018D1YZFT.B	Active	Production	DSBGA (YZF) | 9	250 | SMALL T&R	Yes	SNAGCU	Level-1-260C-UNLIM	-40 to 85	OBC

(1) **Status:** For more details on status, see our product life cycle.

(2) **Material type:** When designated, preproduction parts are prototypes/experimental devices, and are not yet approved or released for full production. Testing and final process, including without limitation quality assurance, reliability performance testing, and/or process qualification, may not yet be complete, and this item is subject to further changes or possible discontinuation. If available for ordering, purchases will be subject to an additional waiver at checkout, and are intended for early internal evaluation purposes only. These items are sold without warranties of any kind.

(3) **RoHS values:** Yes, No, RoHS Exempt. See the TI RoHS Statement for additional information and value definition.

(4) **Lead finish/Ball material:** Parts may have multiple material finish options. Finish options are separated by a vertical ruled line. Lead finish/Ball material values may wrap to two lines if the finish value exceeds the maximum column width.

(5) **MSL rating/Peak reflow:** The moisture sensitivity level ratings and peak solder (reflow) temperatures. In the event that a part has multiple moisture sensitivity ratings, only the lowest level per JEDEC standards is shown. Refer to the shipping label for the actual reflow temperature that will be used to mount the part to the printed circuit board.

(6) **Part marking:** There may be an additional marking, which relates to the logo, the lot trace code information, or the environmental category of the part.

Multiple part markings will be inside parentheses. Only one part marking contained in parentheses and separated by a "~" will appear on a part. If a line is indented then it is a continuation of the previous line and the two combined represent the entire part marking for that device.

Important Information and Disclaimer: The information provided on this page represents TI's knowledge and belief as of the date that it is provided. TI bases its knowledge and belief on information provided by third parties, and makes no representation or warranty as to the accuracy of such information. Efforts are underway to better integrate information from third parties. TI has taken and continues to take reasonable steps to provide representative and accurate information but may not have conducted destructive testing or chemical analysis on incoming materials and chemicals. TI and TI suppliers consider certain information to be proprietary, and thus CAS numbers and other limited information may not be available for release.

In no event shall TI's liability arising out of such information exceed the total purchase price of the TI part(s) at issue in this document sold by TI to Customer on an annual basis.

TAPE AND REEL INFORMATION

REEL DIMENSIONS

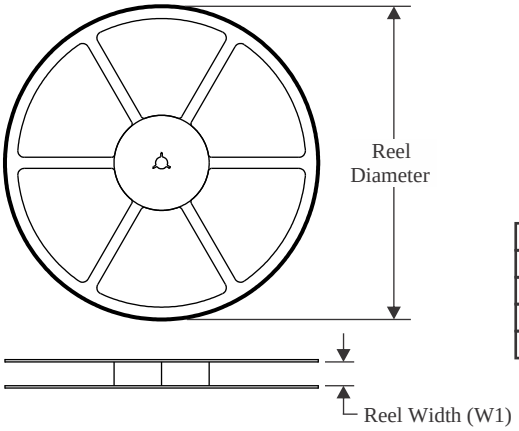

TAPE DIMENSIONS

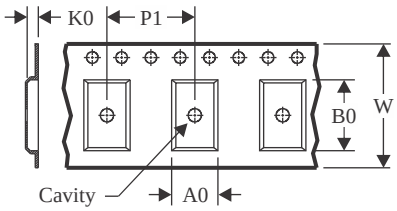

A0	Dimension designed to accommodate the component width
B0	Dimension designed to accommodate the component length
K0	Dimension designed to accommodate the component thickness
W	Overall width of the carrier tape
P1	Pitch between successive cavity centers

QUADRANT ASSIGNMENTS FOR PIN 1 ORIENTATION IN TAPE

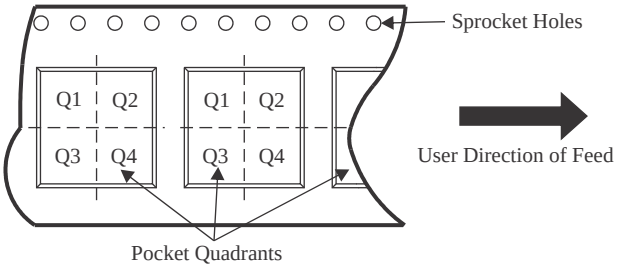

*All dimensions are nominal

Device	Package Type	Package Drawing	Pins	SPQ	Reel Diameter (mm)	Reel Width W1 (mm)	A0 (mm)	B0 (mm)	K0 (mm)	P1 (mm)	W (mm)	Pin1 Quadrant
TPA2018D1YZFR	DSBGA	YZF	9	3000	180.0	8.4	1.71	1.71	0.81	4.0	8.0	Q1
TPA2018D1YZFT	DSBGA	YZF	9	250	180.0	8.4	1.71	1.71	0.81	4.0	8.0	Q1

TAPE AND REEL BOX DIMENSIONS

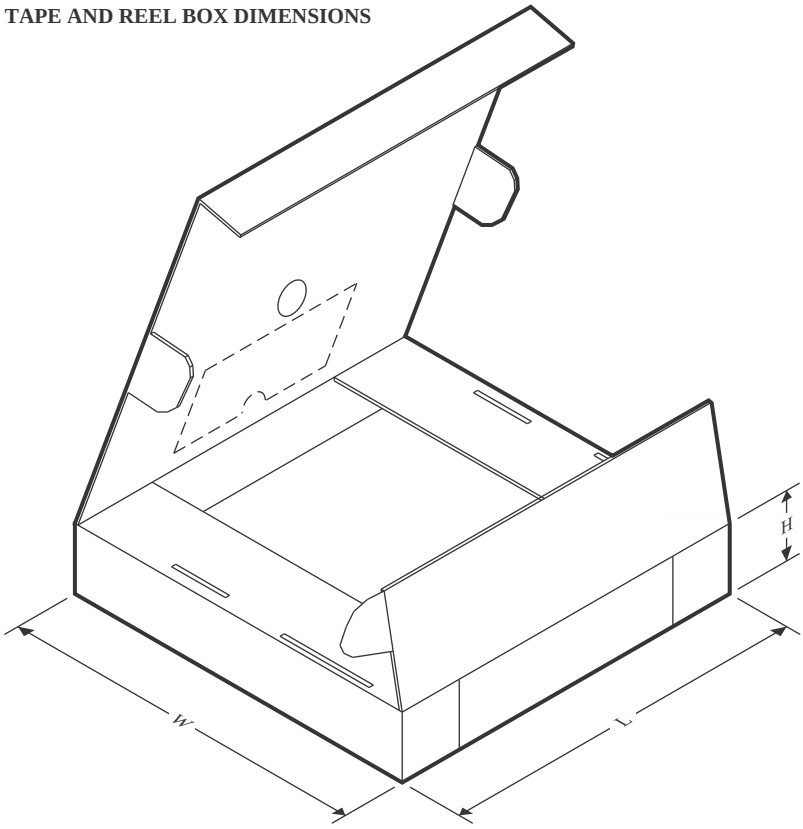

*All dimensions are nominal

Device	Package Type	Package Drawing	Pins	SPQ	Length (mm)	Width (mm)	Height (mm)
TPA2018D1YZFR	DSBGA	YZF	9	3000	182.0	182.0	20.0
TPA2018D1YZFT	DSBGA	YZF	9	250	182.0	182.0	20.0

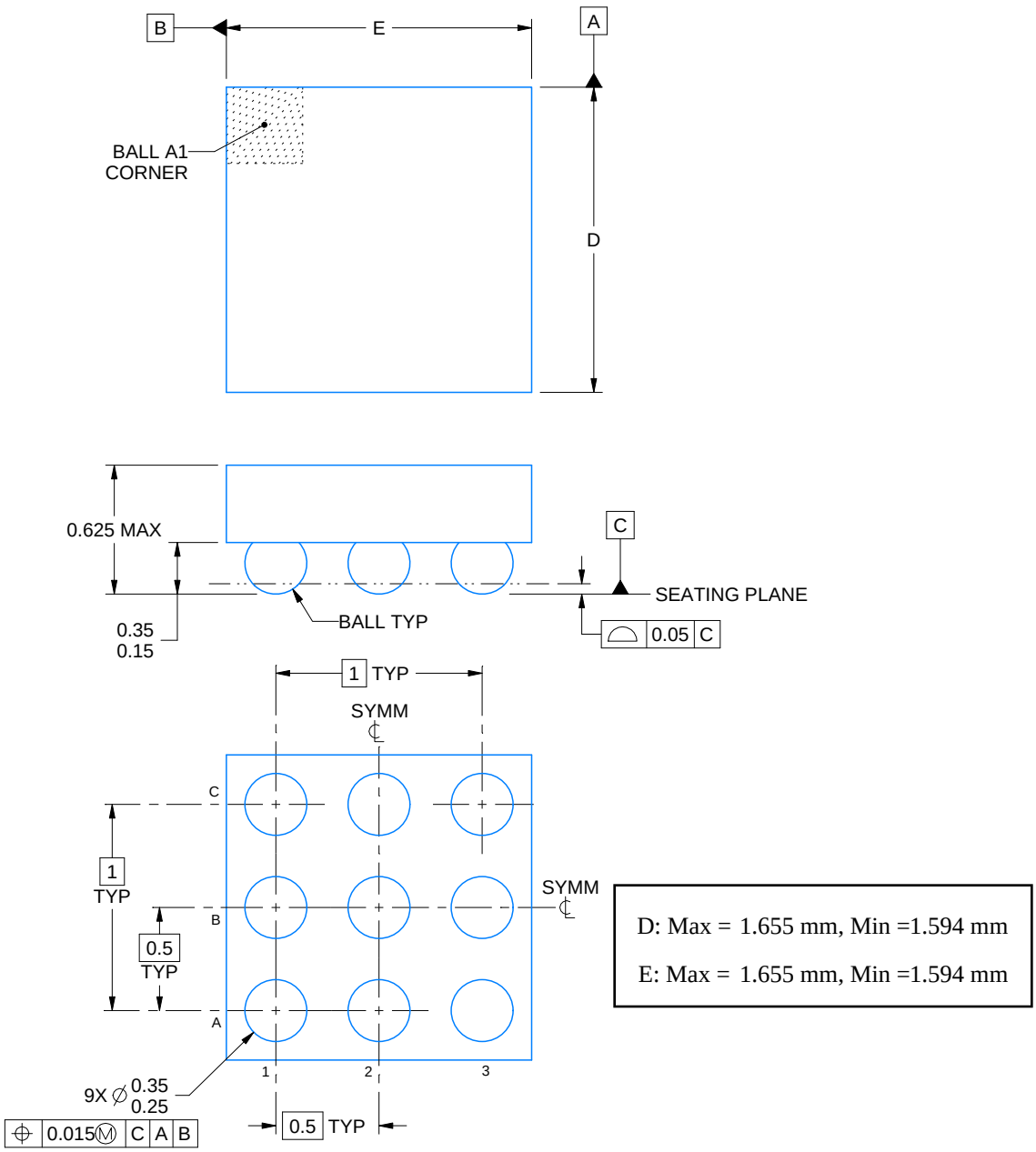

NOTES:

1. All linear dimensions are in millimeters. Any dimensions in parenthesis are for reference only. Dimensioning and tolerancing per ASME Y14.5M.
2. This drawing is subject to change without notice.

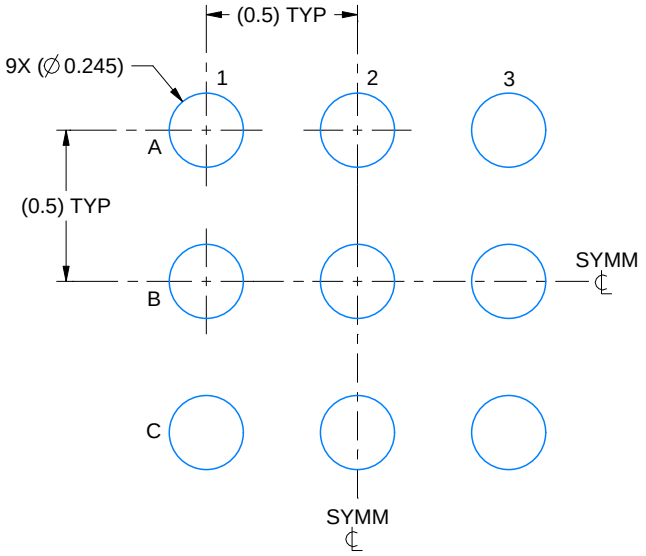

LAND PATTERN EXAMPLE
EXPOSED METAL SHOWN
SCALE: 40X

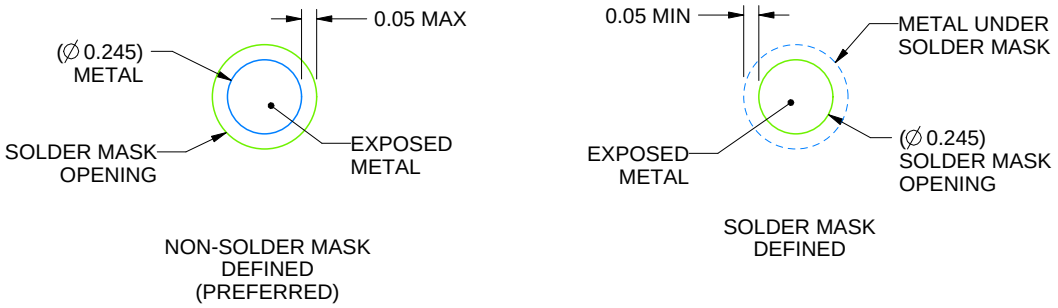

SOLDER MASK DETAILS
NOT TO SCALE

4219558/A 10/2018

NOTES: (continued)

3. Final dimensions may vary due to manufacturing tolerance considerations and also routing constraints.
   See Texas Instruments Literature No. SNVA009 (www.ti.com/lit/snva009).

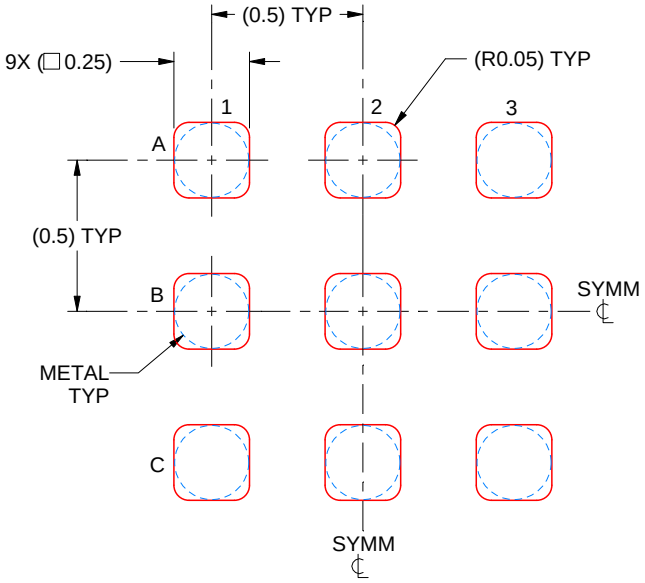

SOLDER PASTE EXAMPLE
BASED ON 0.1 mm THICK STENCIL
SCALE: 40X

4219558/A 10/2018

NOTES: (continued)

4. Laser cutting apertures with trapezoidal walls and rounded corners may offer better paste release.

IMPORTANT NOTICE AND DISCLAIMER

TI PROVIDES TECHNICAL AND RELIABILITY DATA (INCLUDING DATASHEETS), DESIGN RESOURCES (INCLUDING REFERENCE DESIGNS), APPLICATION OR OTHER DESIGN ADVICE, WEB TOOLS, SAFETY INFORMATION, AND OTHER RESOURCES “AS IS” AND WITH ALL FAULTS, AND DISCLAIMS ALL WARRANTIES, EXPRESS AND IMPLIED, INCLUDING WITHOUT LIMITATION ANY IMPLIED WARRANTIES OF MERCHANTABILITY, FITNESS FOR A PARTICULAR PURPOSE OR NON-INFRINGEMENT OF THIRD PARTY INTELLECTUAL PROPERTY RIGHTS.

These resources are intended for skilled developers designing with TI products. You are solely responsible for (1) selecting the appropriate TI products for your application, (2) designing, validating and testing your application, and (3) ensuring your application meets applicable standards, and any other safety, security, regulatory or other requirements.

These resources are subject to change without notice. TI grants you permission to use these resources only for development of an application that uses the TI products described in the resource. Other reproduction and display of these resources is prohibited. No license is granted to any other TI intellectual property right or to any third party intellectual property right. TI disclaims responsibility for, and you fully indemnify TI and its representatives against any claims, damages, costs, losses, and liabilities arising out of your use of these resources.

TI’s products are provided subject to TI’s Terms of Sale, TI’s General Quality Guidelines, or other applicable terms available either on ti.com or provided in conjunction with such TI products. TI’s provision of these resources does not expand or otherwise alter TI’s applicable warranties or warranty disclaimers for TI products. Unless TI explicitly designates a product as custom or customer-specified, TI products are standard, catalog, general purpose devices.

TI objects to and rejects any additional or different terms you may propose.

Copyright © 2026, Texas Instruments Incorporated

Last updated 10/2025