TPS22996H-Q1 5.5V, 4A, 13mΩ On-Resistance Dual-Channel Automotive Load Switch

1 Features

- Integrated dual-channel load switch
- Input voltage range: 0.6V to V_{BIAS}
- V_{BIAS} voltage range: 2.5V to 5.5V
- ON-Resistance
  - R_{ON} = 13mΩ (typical) at V_{IN} = 0.6V to 5V, V_{BIAS} = 5V
- 4A maximum continuous switch current per channel
- Quiescent current:
  - 18µA (typical, both channels) at V_{IN} = V_{BIAS} = 5V
  - 13µA (typical, single channel) at V_{IN} = V_{BIAS} = 5V
- Humidity resistant:
  - Device keeps functionality (ON, OFF, protection), but timing specification is affected under the following conditions:
    - 100kΩ short to GND
    - 100kΩ short to power
- Control input threshold enables use of 1.2V, 1.8V, 2.5V, and 3.3V logic
- Configurable rise time
- Thermal shutdown
- Quick output discharge (QOD)

2 Applications

- Infotainment
- Cluster
- ADAS

3 Description

TPS22996H-Q1 is a dual-channel load switch with controlled turnon. The device contains two N-channel MOSFETs that can operate over an input voltage range of 0.6V to 5.5V, and can support a maximum continuous current of 4A per channel. Each switch is independently controlled by an on and off input (ON1 and ON2), which can interface directly with low-voltage control signals. The device is capable of thermal shutdown when the junction temperature is above the threshold, turning the switch off. The switch turns on again when the junction temperature stabilizes to a safe range. The device also offers an integrated 230Ω on-chip load resistor for quick output discharge when the switch is turned off.

The pins of the TPS22996H-Q1 are resistant to high humidity conditions, meaning that the device is able to function with a 100kΩ short from any pin to GND or power.

The TPS22996H-Q1 is available in a small, space-saving 2.1mm × 1.2mm 8-DYC package. The device is characterized for operation over the free-air temperature range of –40°C to 125°C.

Package Information

PART NUMBER	PACKAGE(1)	PACKAGE SIZE(2)
TPS22996H	DYC (SOT, 8)	2.1mm × 1.2mm

(1) For all available packages, see the orderable addendum at the end of the data sheet.
(2) The package size (length × width) is a nominal value and includes pins, where applicable.

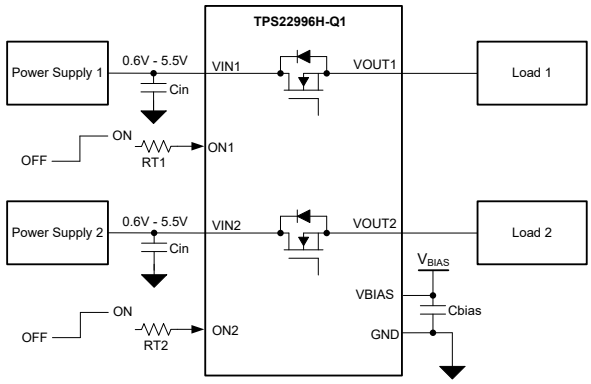

Application Circuit

An IMPORTANT NOTICE at the end of this data sheet addresses availability, warranty, changes, use in safety-critical applications, intellectual property matters and other important disclaimers. PRODUCTION DATA.

Table of Contents

1 Features....1
2 Applications....1
3 Description....1
4 Pin Configuration and Functions....3
5 Specifications....4
5.1 Absolute Maximum Ratings....4
5.2 ESD Ratings....4
5.3 Recommended Operating Conditions....4
5.4 Thermal Information....4
5.5 Electrical Characteristics....5
5.6 Switching Characteristics....6
5.7 Typical DC Characteristics....7
5.8 Typical AC Characteristics....8
6 Parameter Measurement Information....12
7 Detailed Description....13
7.1 Overview....13
7.2 Functional Block Diagram....14
7.3 Feature Description....14
7.4 Device Functional Modes....16
8 Application and Implementation....17
8.1 Application Information....17
8.2 Typical Application....17
8.3 Power Supply Recommendations....20
8.4 Layout....20
9 Device and Documentation Support....22
9.1 Receiving Notification of Documentation Updates....22
9.2 Support Resources....22
9.3 Trademarks....22
9.4 Electrostatic Discharge Caution....22
9.5 Glossary....22
10 Revision History....22
11 Mechanical, Packaging, and Orderable Information....22

Copyright © 2024 Texas Instruments Incorporated

4 Pin Configuration and Functions

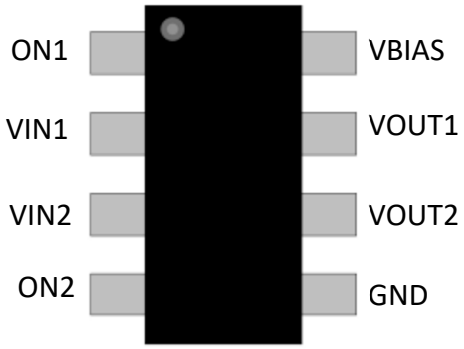

Figure 4-1. DYC Package, 8-Pin SOT (Top View)

Table 4-1. Pin Functions

PIN		I/O	DESCRIPTION
NO.	NAME		
1	ON1	Input	Active-high switch 1 control input. Connect series resistor to set Slew Rate. Do not leave floating. See Section 7.3.7 for more information.
2	VIN1	Input	Switch 1 input. Recommended voltage range for these pins for optimal R_{ON} performance is 0.6V to V_{BIAS}. Place an optional decoupling capacitor between these pins and GND to reduce V_{IN1} dip during turnon of the channel. See Section 8.2 for more information.
3	VIN2	Input	Switch 2 input. Recommended voltage range for these pins for optimal R_{ON} performance is 0.6V to V_{BIAS}. Place an optional decoupling capacitor between these pins and GND to reduce V_{IN2} dip during turnon of the channel. See Section 8.2 for more information.
4	ON2	Input	Active-high switch 2 control input. Connect series resistor to set slew rate. Do not leave floating. See Section 7.3.7 for more information.
5	GND	—	Device ground.
6	VOUT2	Output	Switch 2 output.
7	VOUT1	Output	Switch 1 output.
8	VBIAS	Input	Bias voltage. Power supply to the device. Recommended voltage range for this pin is 2.5V to 5.5V. See Section 8.1.

Copyright © 2024 Texas Instruments Incorporated

5 Specifications

5.1 Absolute Maximum Ratings

over operating free-air temperature range (unless otherwise noted)[1]

		MIN	MAX	UNIT
$V_{IN1,2}$	Input Voltage	–0.3	6	V
$V_{OUT1,2}$	Output Voltage	–0.3	6	V
$V_{ON1,2}$	ON Pin Voltage	–0.3	6	V
V_{BIAS}	Bias Voltage	–0.3	6	V
I_{MAX}	Maximum continuous current per channel		4	A
$I_{MAX,PLS}$	Maximum pulsed current switch per channel, pulse <300µs, 3% duty cycle		5.5	A
T_J	Junction temperature		150	°C
T_{stg}	Storage temperature	–65	150	°C

(1) Stresses beyond those listed under *Absolute Maximum Rating* may cause permanent damage to the device. These are stress ratings only, which do not imply functional operation of the device at these or any other conditions beyond those indicated under *Recommended Operating Condition*. Exposure to absolute-maximum-rated conditions for extended periods may affect device reliability.

5.2 ESD Ratings

			VALUE	UNIT
$V_{(ESD)}$	Electrostatic discharge	Human-body model (HBM), per AEC Q100-002[1] HBM ESD	±2000	V
		Charged-device model (CDM), per AEC Q100-011 CDM ESD, VIN1,VIN2,VOUT1,VOUT2 pins	±500	
		Charged-device model (CDM), per AEC Q100-011 CDM ESD, ON1,ON2,VBIAS pins	±750	V

(1) AEC Q100-002 indicates that HBM stressing shall be in accordance with the ANSI/ESDA/JEDEC JS-001 specification.

5.3 Recommended Operating Conditions

over operating free-air temperature range (unless otherwise noted)

		MIN	NOM	MAX	UNIT
$V_{IN1,2}$	Input Voltage	0.6		V_{BIAS}	V
V_{BIAS}	Bias Voltage	2.5		5.5	V
$V_{ON1,2}$	ON Pin Voltage	0		5.5	V
$V_{OUT1,2}$	Output Voltage	0		V_{IN}	V
V_{IH}	High-Level Input Voltage, ON	1.2		5.5	V
V_{IL}	Low-Level Input Voltage, ON	0		0.5	V
T_A	Ambient Temperature	–40		125	°C

5.4 Thermal Information

THERMAL METRIC[1]		TPS22996H-Q1 DYC 8 PINS	UNIT
$R_{\theta JA}$	Junction-to-ambient thermal resistance	108.7	°C/W
$R_{\theta JC(top)}$	Junction-to-case (top) thermal resistance	73.2	°C/W
$R_{\theta JB}$	Junction-to-board thermal resistance	17.5	°C/W
Ψ_{JT}	Junction-to-top characterization parameter	2.5	°C/W
Ψ_{JB}	Junction-to-board characterization parameter	17.3	°C/W

Copyright © 2024 Texas Instruments Incorporated

THERMAL METRIC[1]		TPS22996H-Q1 DYC 8 PINS	UNIT
$R_{\theta JC(bot)}$	Junction-to-case (bottom) thermal resistance	N/A	°C/W

(1) For more information about traditional and new thermal metrics, see the Semiconductor and IC Package Thermal Metrics application report.

5.5 Electrical Characteristics

over operating free-air temperature range (unless otherwise noted)

PARAMETER		TEST CONDITIONS		T_A	MIN	TYP	MAX	UNIT
Power Supplies and Currents								
$I_{Q,VBIAS}$	V_{BIAS} Quiescent Current (Both channels)	$I_{OUT1} = I_{OUT2} = 0mA$, $V_{IN1,2} = V_{ON1,2} = 5V$		25°C		18		µA
				-40°C to 85°C		18	22	µA
				-40°C to 125°C			25	µA
$I_{Q,VBIAS}$	V_{BIAS} Quiescent Current (Single-channel)	$I_{OUT1} = I_{OUT2} = 0mA$, $V_{ON2} = 0V$, $V_{IN1,2} = V_{IN1} = 5V$		25°C		13		µA
				-40°C to 85°C		13	17	µA
				-40°C to 125°C			19	µA
$I_{SD,VBIAS}$	V_{BIAS} Shutdown Current	$V_{ON1,2} = 0V$, $V_{OUT1,2} = 0V$		25°C		0.005	1	µA
				-40°C to 85°C		0.005	1	µA
				-40°C to 125°C		0.005	1	µA
$I_{SD,VIN}$	V_{IN} Shutdown Current (per channel)	$V_{ON} = 0V$, $V_{OUT} = 0V$	$V_{IN} = 5V$	25°C		0.002	0.8	µA
				-40°C to 85°C		0.002	0.8	µA
				-40°C to 125°C			1	µA
			$V_{IN} = 3.3V$	25°C		0.002	0.8	µA
				-40°C to 85°C		0.002	0.8	µA
				-40°C to 125°C			1	µA
			$V_{IN} = 1.8V$	25°C		0.002	0.8	µA
				-40°C to 85°C		0.002	0.8	µA
				-40°C to 125°C			1	µA
			$V_{IN} = 0.6V$	25°C		0.002	0.8	µA
				-40°C to 85°C		0.002	0.8	µA
				-40°C to 125°C			1	µA
I_{ON}	ON Pin Leakage Current		$V_{ON} = 5.5V$	-40°C to 125°C			0.1	µA
Resistance Characteristics								
R_{ON}	On-Resistance	$I_{OUT} = -200mA$	$V_{IN} = 5V$	25°C		13	15	mΩ
				-40°C to 85°C			18	mΩ
				-40°C to 125°C			22	mΩ
			$V_{IN} = 3.3V$	25°C		13	15	mΩ
				-40°C to 85°C			18	mΩ
				-40°C to 125°C			22	mΩ
			$V_{IN} = 1.8V$	25°C		13	15	mΩ
				-40°C to 85°C			18	mΩ
				-40°C to 125°C			22	mΩ
			$V_{IN} = 0.6V$	25°C		13	15	mΩ
				-40°C to 85°C			18	mΩ
				-40°C to 125°C			22	mΩ
$V_{ON,VIH}$	VIH	$V_{IN} = 5V$	$V_{IN} = 5V$	-55°C to 125°C	1.2			V

Copyright © 2024 Texas Instruments Incorporated

5.5 Electrical Characteristics (continued)

over operating free-air temperature range (unless otherwise noted)

PARAMETER		TEST CONDITIONS		T_A	MIN	TYP	MAX	UNIT
$V_{ON,VIL}$	VIL	V_{IN} = 5V	V_{IN} = 5V	-55°C to 125°C			0.65	V
$V_{ON,HYS}$	ON Pin Hysteresis	V_{IN} = 5V		-55°C to 125°C		90		mV
R_i	Internal On Pin Resistance	V_{ON} = 5V	V_{ON} = 5V	-55°C to 125°C		12.5		kΩ
R_{PD}	Output Pulldown Resistance	V_{IN} = V_{OUT} = 5V, VO_N = 0V		-40°C to 125°C		230	300	Ω
T_{SD}	Thermal Shutdown	Junction Temperature Rising		-		175		°C
$T_{SD,HYS}$	Thermal Shutdown Hysteresis	Junction Temperature Falling		-		20		°C

5.6 Switching Characteristics

over operating free-air temperature range (unless otherwise noted)

PARAMETER		TEST CONDITIONS	MIN	TYP	MAX	UNIT
VIN = VON = VBIAS = 5V						
t_{ON}	Turn ON Time	R_L = 10Ω, C_L = 0.1uF, I_{ON} = 100 uA		946		µs
t_{OFF}	Turn OFF Time	R_L = 10Ω, C_L = 0.1uF, I_{ON} = 100 uA		2.1		µs
t_R	Rise Time	R_L = 10Ω, C_L = 0.1uF, I_{ON} = 100 uA		626		µs
t_F	Fall Time	R_L = 10Ω, C_L = 0.1uF, I_{ON} = 100 uA		2.1		µs
t_D	Delay Time	R_L = 10Ω, C_L = 0.1uF, I_{ON} = 100 uA		320		µs
VIN = 0.6V, VON = VBIAS = 5V						
t_{ON}	Turn ON Time	R_L = 10Ω, C_L = 0.1uF, I_{ON} = 100 uA,		587		µs
t_{OFF}	Turn OFF Time	R_L = 10Ω, C_L = 0.1uF, I_{ON} = 100 uA		2.1		µs
t_R	Rise Time	R_L = 10Ω, C_L = 0.1uF, I_{ON} = 100 uA		203		µs
t_F	Fall Time	R_L = 10Ω, C_L = 0.1uF, I_{ON} = 100 uA		2.52		µs
t_D	Delay Time	R_L = 10Ω, C_L = 0.1uF, I_{ON} = 100 uA		384		µs

Copyright © 2024 Texas Instruments Incorporated

5.7 Typical DC Characteristics

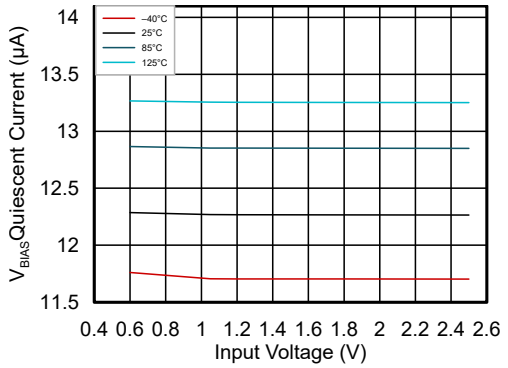

V_{BIAS} = 2.5 V

Figure 5-1. V_{BIAS} Quiescent Current vs Input Voltage Single Channel

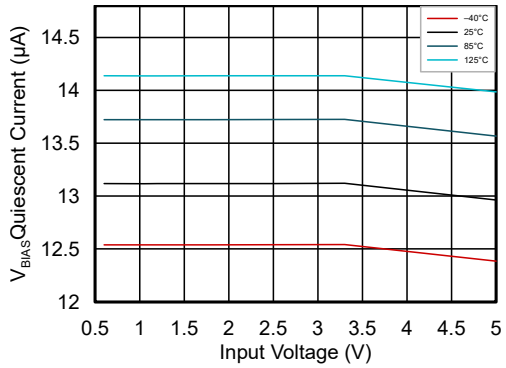

V_{BIAS} = 5 V

Figure 5-2. V_{BIAS} Quiescent Current vs Input Voltage Single Channel

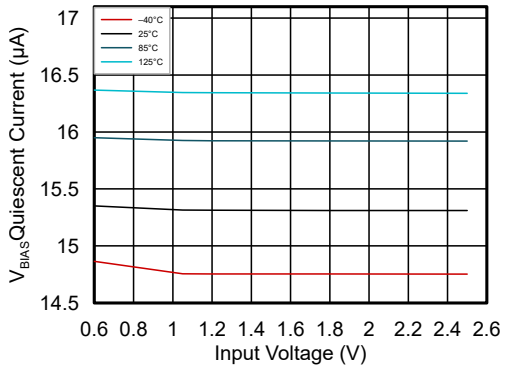

V_{BIAS} = 2.5 V

Figure 5-3. V_{BIAS} Quiescent Current vs Input Voltage Both Channel

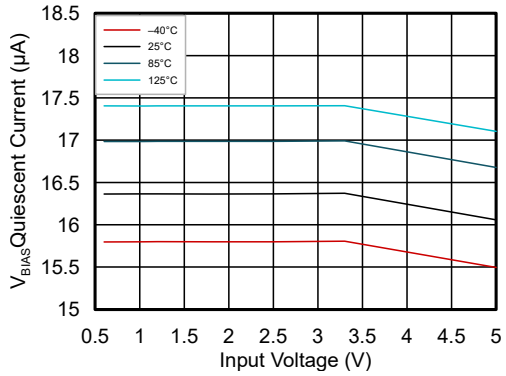

V_{BIAS} = 5 V

Figure 5-4. V_{BIAS} Quiescent Current vs Input Voltage Both Channel

5.8 Typical AC Characteristics

AC Characteristics

C_{IN} = 1 µF, C_L = 0.1 µF, R_L = 10 Ω, V_{ON} = 5 V, I_{ON} = 100 µA unless otherwise noticed

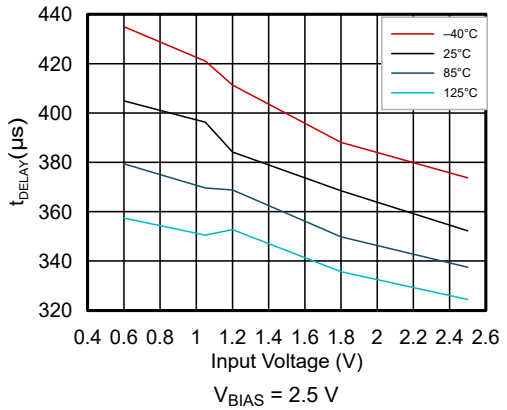

V_{BIAS} = 2.5 V

Figure 5-5. Delay Time vs Input Voltage

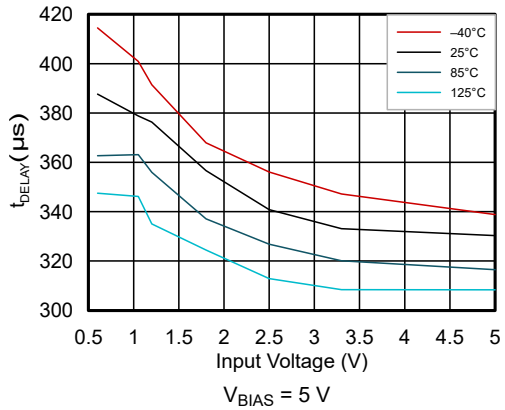

V_{BIAS} = 5 V

Figure 5-6. Delay Time vs Input Voltage

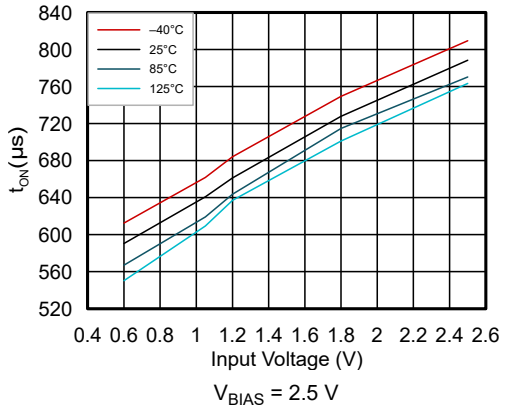

V_{BIAS} = 2.5 V

Figure 5-7. Turnon Time vs Input Voltage

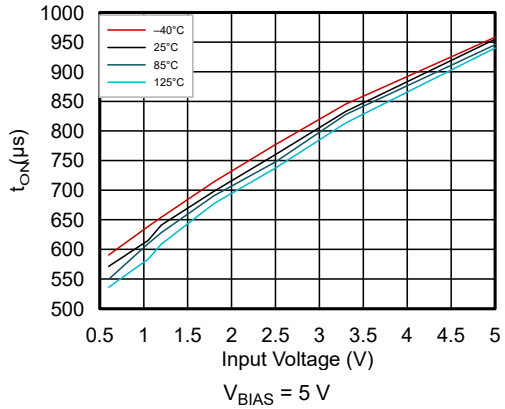

V_{BIAS} = 5 V

Figure 5-8. Turnon Time vs Input Voltage

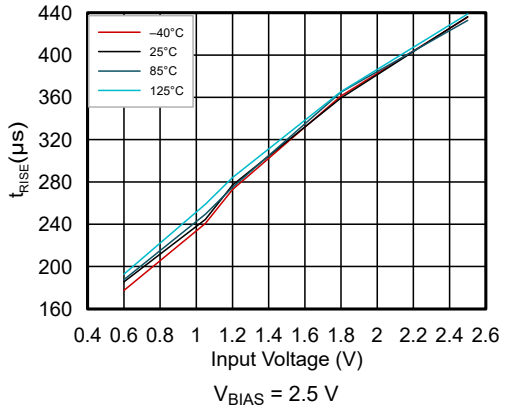

V_{BIAS} = 2.5 V

Figure 5-9. Rise Time vs Input Voltage

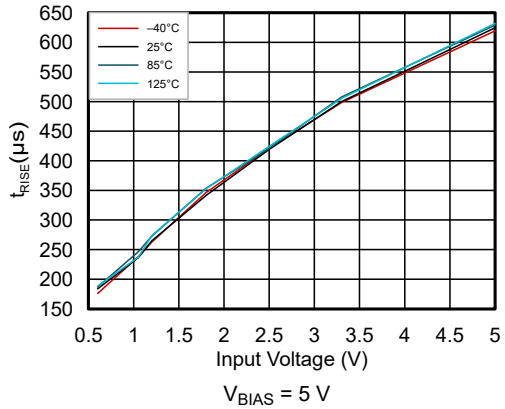

V_{BIAS} = 5 V

Figure 5-10. Rise Time vs Input Voltage

Copyright © 2024 Texas Instruments Incorporated

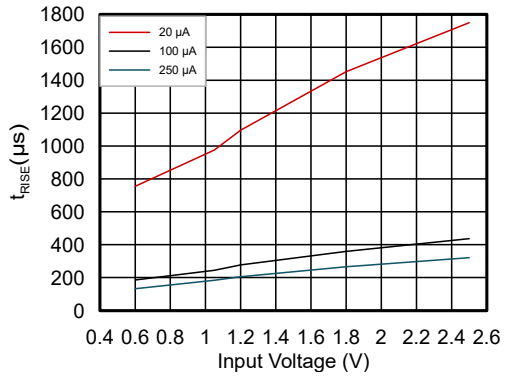

T_{AMB} = 25 °C V_{BIAS} = 2.5 V

Figure 5-11. Rise Time vs Input Voltage with Different I_{ON}

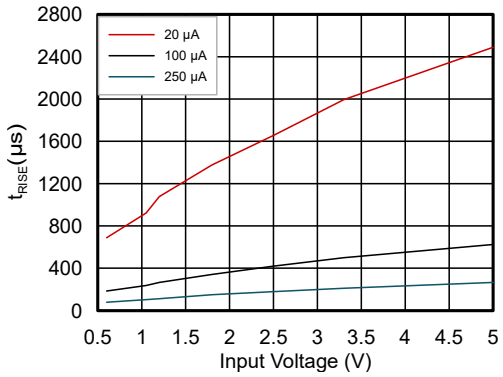

T_{AMB} = 25 °C V_{BIAS} = 5 V

Figure 5-12. Rise Time vs Input Voltage with Different I_{ON}

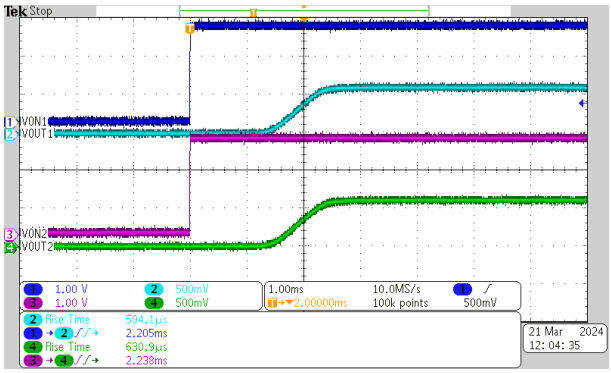

V_{BIAS} = 2.5 V V_{IN} = 0.6 V I_{ON} = 20 µA

Figure 5-13. Turnon Response Time

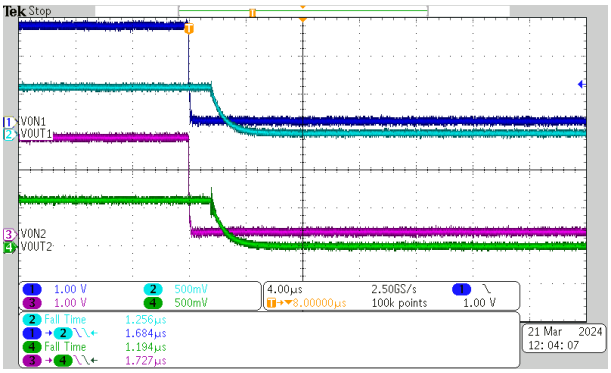

V_{BIAS} = 2.5 V V_{IN} = 0.6 V I_{ON} = 20 µA

Figure 5-14. Turnoff Response Time

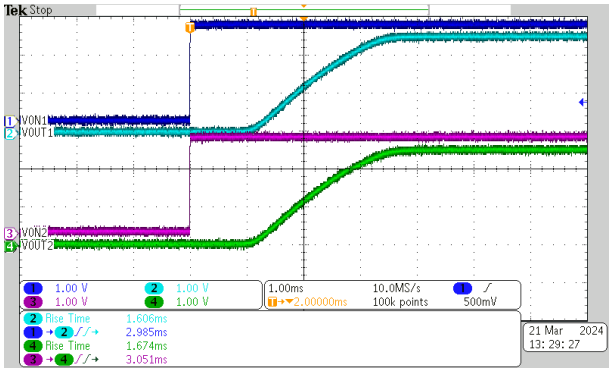

V_{BIAS} = 2.5 V V_{IN} = 2.5 V I_{ON} = 20 µA

Figure 5-15. Turnon Response Time

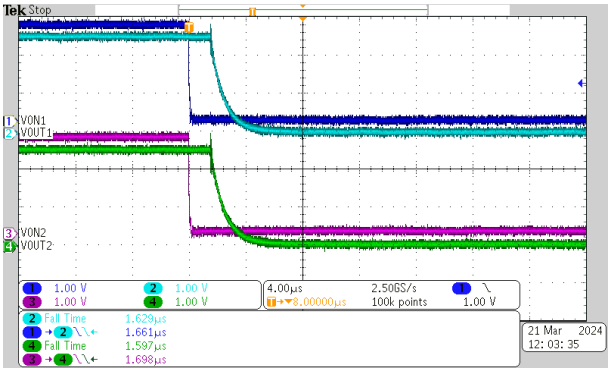

V_{BIAS} = 2.5 V V_{IN} = 2.5 V I_{ON} = 20 µA

Figure 5-16. Turnoff Response Time

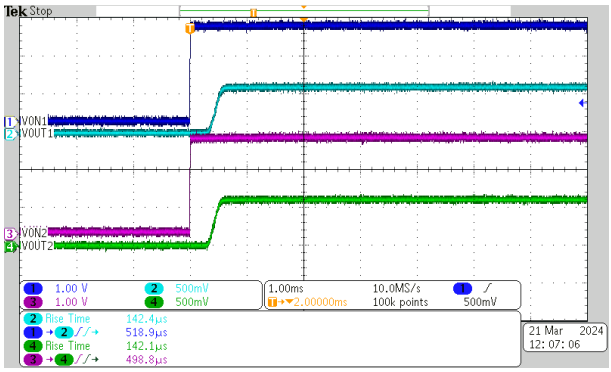

V_{BIAS} = 2.5 V V_{IN} = 0.6 V I_{ON} = 100 µA

Figure 5-17. Turnon Response Time

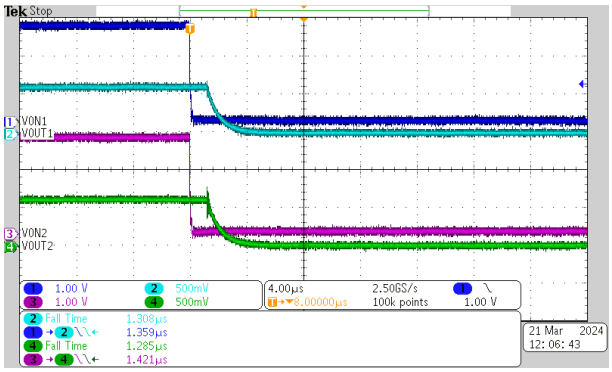

V_{BIAS} = 2.5 V V_{IN} = 0.6 V I_{ON} = 100 µA

Figure 5-18. Turnoff Response Time

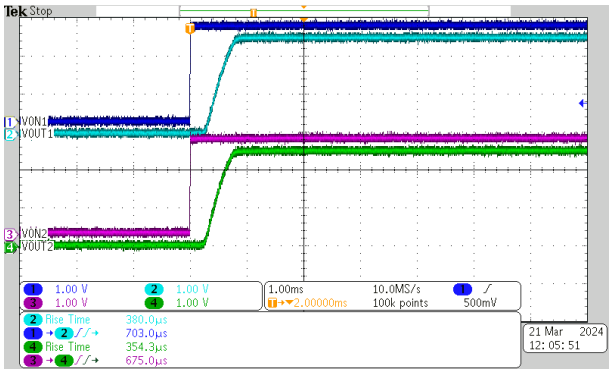

V_{BIAS} = 2.5 V V_{IN} = 2.5 V I_{ON} = 100 µA

Figure 5-19. Turnon Response Time

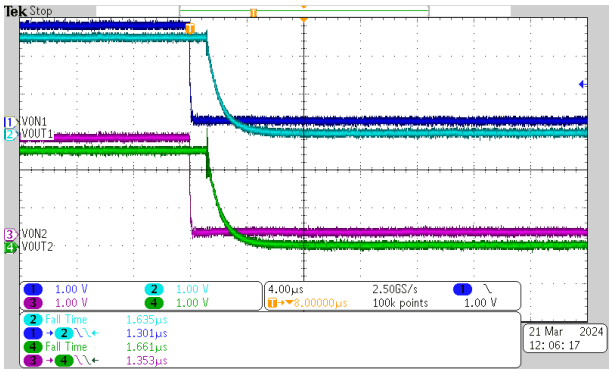

V_{BIAS} = 2.5 V V_{IN} = 2.5 V I_{ON} = 100 µA

Figure 5-20. Turnoff Response Time

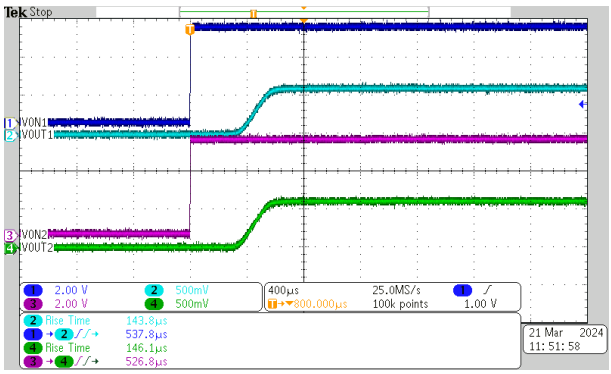

V_{BIAS} = 5 V V_{IN} = 0.6 V I_{ON} = 100 µA

Figure 5-21. Turnon Response Time

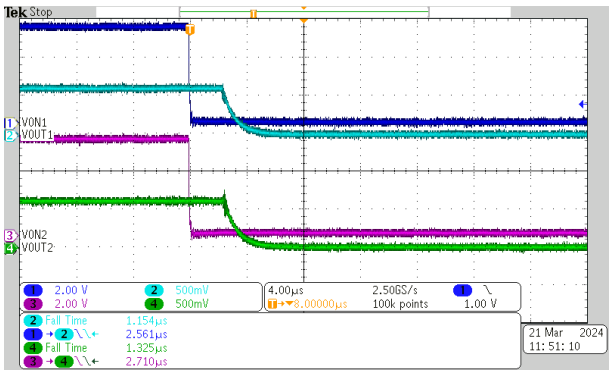

V_{BIAS} = 5 V V_{IN} = 0.6 V I_{ON} = 100 µA

Figure 5-22. Turnoff Response Time

Copyright © 2024 Texas Instruments Incorporated

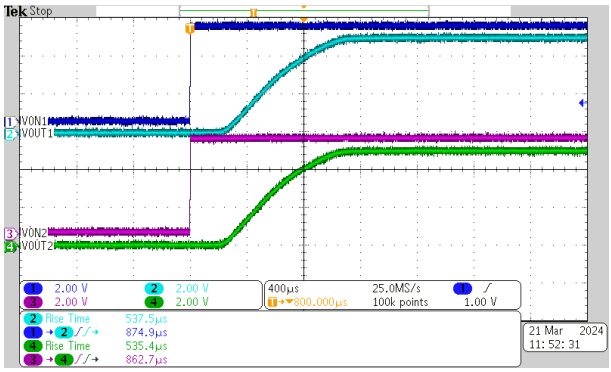

V_{BIAS} = 5 V V_{IN} = 5 V I_{ON} = 100 µA

Figure 5-23. Turnon Response Time

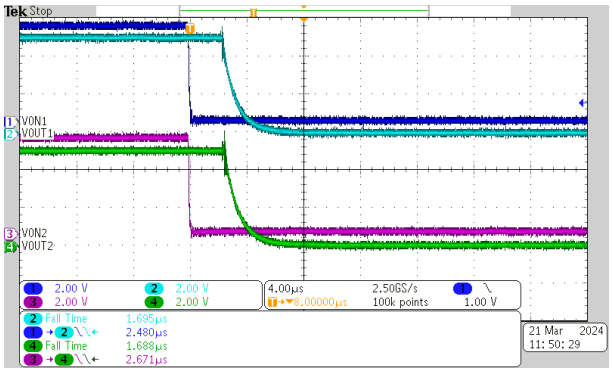

V_{BIAS} = 5 V V_{IN} = 5 V I_{ON} = 100 µA

Figure 5-24. Turnoff Response Time

6 Parameter Measurement Information

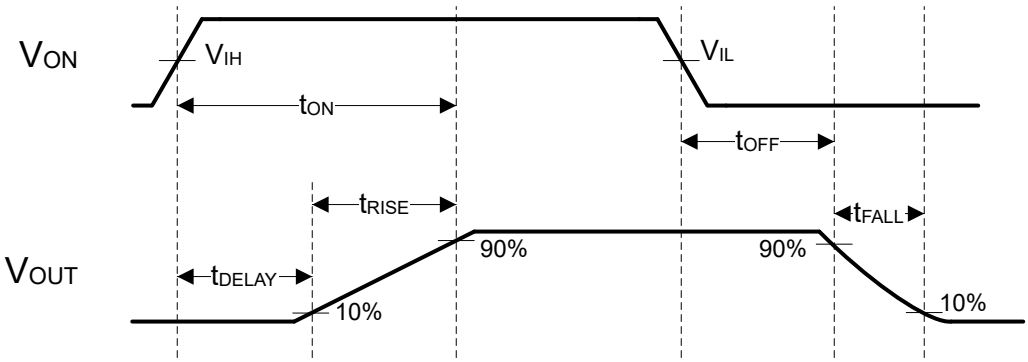

Figure 6-1. t_{ON} and t_{OFF} Waveforms

Copyright © 2024 Texas Instruments Incorporated

7 Detailed Description

7.1 Overview

The TPS22996H-Q1 is a 5.5V, dual-channel, 13mΩ (typical) R_{ON} load switch in a 8-pin DYC package. Each channel can support a maximum continuous current of 4A and is controlled by an on and off GPIO-compatible input. To reduce the voltage drop in high current rails, the device implements N-channel MOSFETs. Note that the ON pins must be connected and cannot be left floating. The device has a configurable slew rate for applications that require specific rise-time, which controls the inrush current. By controlling the inrush current, power supply sag can be reduced during turnon. Furthermore, the slew rate is proportional to the series resistor used on the ONx pin. See Section 7.3.7 to determine the correct resistor value for a desired rise time.

The internal circuitry is powered by the V_{BIAS} pin, which supports voltages from 2.5V to 5.5V. This circuitry includes the charge pump, QOD, and control logic. When a voltage is applied to V_{BIAS}, and the $ON_{1,2}$ pins transition to a low state, the QOD functionality is activated. This connects V_{OUT1} and V_{OUT2} to ground through the on-chip resistor. The typical pulldown resistance (R_{PD}) is 230Ω.

During the off state, the device prevents downstream circuits from pulling high standby current from the supply. The integrated control logic, driver, power supply, and output discharge FET eliminates the need for any external components, reducing solution size and bill of materials (BOM) count.

7.2 Functional Block Diagram

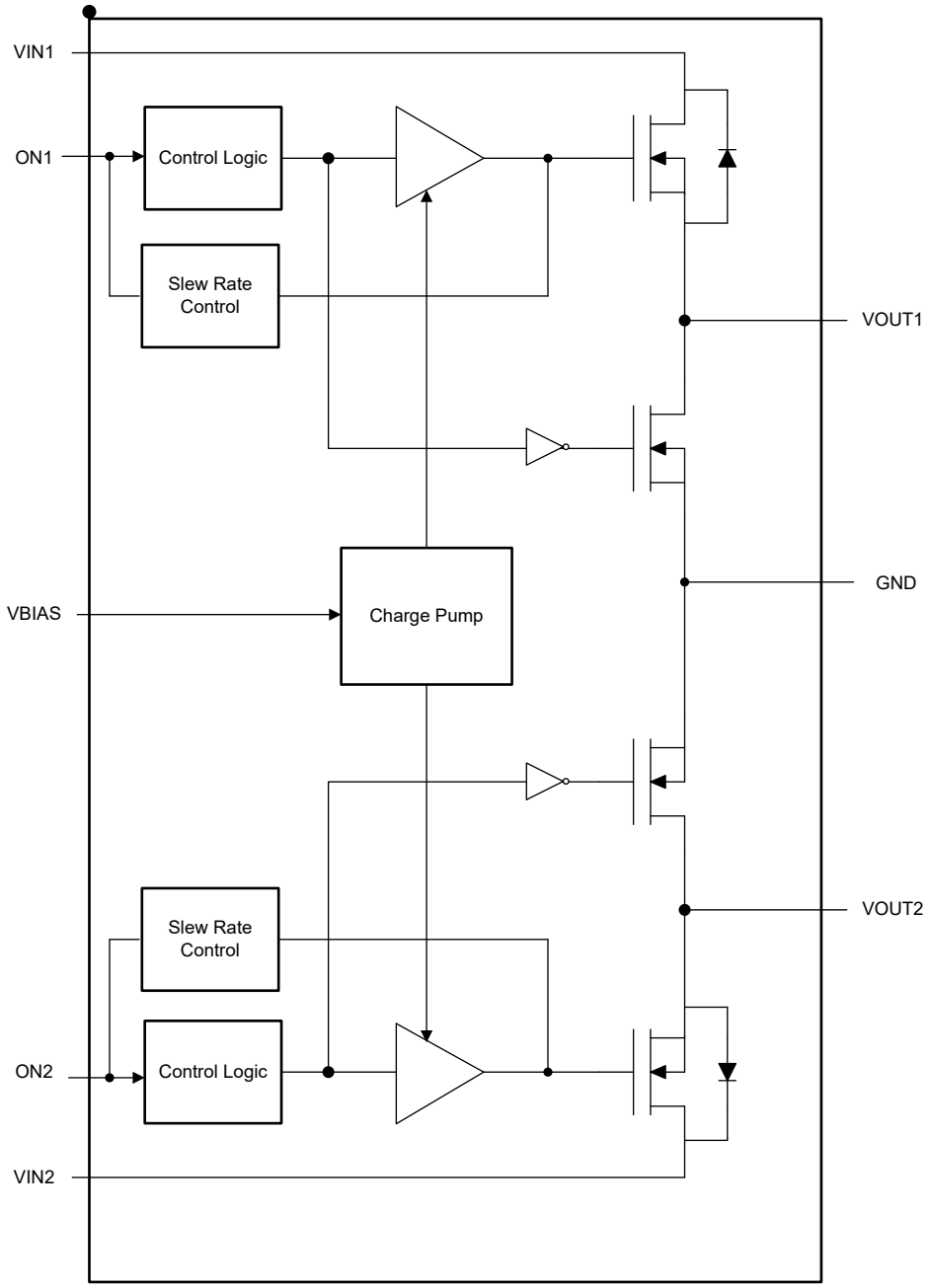

7.3 Feature Description

7.3.1 ON and OFF Control

The ON pins control the state of the switch. Asserting ON high enables the switch. ON is active high with a low threshold, making it capable of interfacing with low-voltage signals. The ON pin is compatible with standard GPIO logic threshold. It can be used with any microcontroller with 1.2V or higher GPIO voltage. This pin cannot be left floating and must be tied either high or low for proper functionality.

7.3.2 Input Capacitor (Optional)

To limit the voltage drop on the input supply caused by transient inrush currents when the switch turns on into a discharged load capacitor, a capacitor needs to be placed between VIN and GND. A 1µF ceramic capacitor, C_{IN},

Copyright © 2024 Texas Instruments Incorporated

placed close to the pins is usually sufficient. Higher values of C_{IN} can be used to further reduce the voltage drop during high-current application. When switching heavy loads, it is recommended to have an input capacitor about 10 times higher than the output capacitor to avoid excessive voltage drop.

7.3.3 Output Capacitor (Optional)

Due to the integrated body diode in the NMOS switch, a C_{IN} greater than C_L is highly recommended. A C_L greater than C_{IN} can cause V_{OUT} to exceed V_{IN} when the system supply is removed. This could result in current flow through the body diode from VOUT to VIN. A C_{IN} to C_L ratio of 10 to 1 is recommended for minimizing V_{IN} dip caused by inrush currents during startup, however a 10 to 1 ratio for capacitance is not required for proper functionality of the device. A ratio smaller than 10 to 1 (such as 1 to 1) could cause slightly more V_{IN} dip upon turnon due to inrush currents. This can be mitigated by increasing the RT resistance on the ON pin for a longer rise time (see Section 7.3.7).

7.3.4 Quick Output Discharge

When the switch is disabled, an internal discharge resistance is connected between VOUT and GND to remove the remaining charge from the output. This resistance prevents the output from floating while the switch is disabled. For best results, it is recommended that the device gets disabled before V_{BIAS} falls below the minimum recommended voltage.

7.3.5 Humidity Resistance

TPS22996H-Q1 is designed to be resistant to humidity, which is replicated by 100kΩ short between any pin to either GND or power. Under such humidity conditions, our device is able to function correctly with ON, OFF and thermal shutdown. However, the timing parameter will be affected by the short condition, and will deviate from the typical value listed in the *Electrical Characteristics* table (see Section 5.5).

7.3.6 Thermal Shutdown

Thermal shutdown protects the part from internally or externally generated excessive temperatures. When the device temperature exceeds T_{SD}, the switch is turned off. The switch automatically turns on again if the temperature of the die drops $T_{SD,HYS}$ below the T_{SD} threshold.

7.3.7 Adjustable Rise Time

TPS22996H-Q1 integrates a unique architecture for adjusting the rise time. The device senses the current flowing into the ON1 and ON2 (I_{ON}) pins and utilizes the information to set the rise time. This allows the user to adjust the rise time by connecting a series resistance that is determined by the ON pin voltage. Refer to Table 7-1 for reference on setting the resistor.

Table 7-1. Typical Rise Time (VBIAS = 5V)

I_{ON}	V_{IN} = 0.6V	V_{IN} = 1.8V	V_{IN} = 2.5V	V_{IN} = 3.3V	V_{IN} = 5V
20µA	764µs	1380µs	1700µs	1955µs	2350µs
100µA	203µs	343µs	426µs	500µs	626µs
250µA	85µs	148µs	180µs	208µs	265µs

Table 7-2. Typical Rise Time (VBIAS = 3.3V)

I_{ON}	V_{IN} = 0.6V	V_{IN} = 1.8V	V_{IN} = 2.5V	V_{IN} = 3.3V
20µA	738µs	1420µs	1735µs	2040µs
100µA	191µs	360µs	437µs	512µs
250µA	88µs	239µs	170µs	204µs

The following equation can be used to estimate the series resistance required to meet the desired rise time.

$$R_{Tx} = 1000 \times (V_{ONx_GPIO} - 1.2V) / I_{ONx} - R_i \quad (1)$$

where:

- R_{Tx} = Channel × series resistance in kΩ.
- R_i = Internal ON pin resistance kΩ.
- V_{ONx_GPIO} = Channel × GPIO voltage connected to ONx pin in V.
- I_{ONx} = Current flowing into the ONx pin in µA.

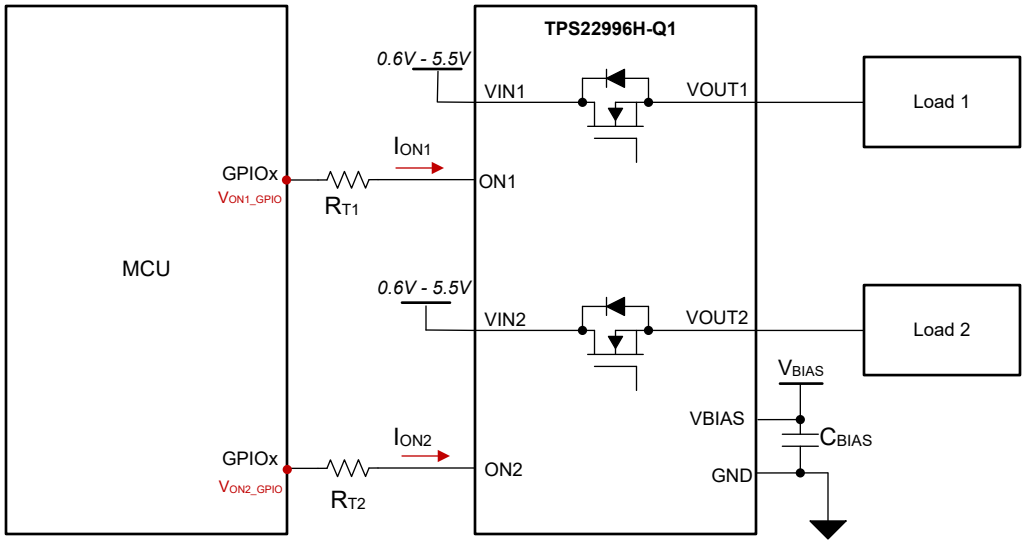

Figure 7-1. TPS22996H-Q1 Adjustable Rise Time Configuration

7.4 Device Functional Modes

Table 7-3 lists the TPS22996H-Q1 functions.

Table 7-3. TPS22996H-Q1 Functions Table

ON	VIN to VOUT	VOUT
L	Off	GND
H	On	VIN

Copyright © 2024 Texas Instruments Incorporated

8 Application and Implementation

Note

Information in the following applications sections is not part of the TI component specification, and TI does not warrant its accuracy or completeness. TI's customers are responsible for determining suitability of components for their purposes, as well as validating and testing their design implementation to confirm system functionality.

8.1 Application Information

This section highlights some of the design considerations for implementing the device in various applications.

8.2 Typical Application

This application demonstrates how the TPS22996H-Q1 can be used to limit the inrush current when powering on downstream modules.

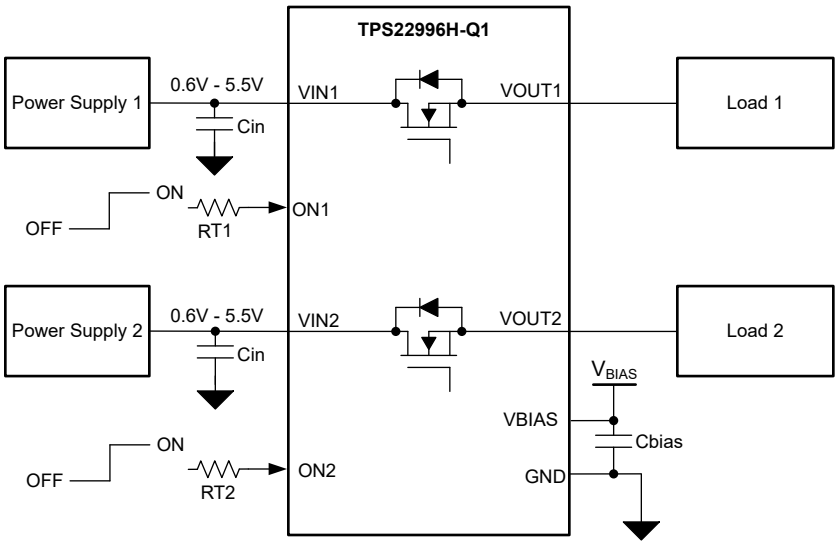

Figure 8-1. Typical Application Circuit

Table 8-1. Component Descriptions

DESIGN PARAMETER	TYPICAL VALUES	DESCRIPTION
C_{IN}	1µF	Filtering voltage transients
C_{OUT}	100nF	Filtering voltage transients
C_{BIAS}	0.1µF	Filtering voltage transients
RT1, RT2	10kΩ	Series resistor for rise time control

8.2.1 Design Requirements

Table 8-2 shows the TPS22996H-Q1 design parameters.

Table 8-2. Design Parameters

DESIGN PARAMETER	VALUE
V_{BIAS}	5V
V_{IN}	5V
Rise Time	1000µs

Copyright © 2024 Texas Instruments Incorporated

8.2.2 Detailed Design Procedure

The design in this example is trying to achieve 1000µs rise time for power sequencing, with both V_{BIAS} and V_{IN} to be 5V. From Table 7-1, the I_{ON} needs to be between 20µA and 100µA. To find the I_{ON} needed to achieve 1000µs rise time, linear interpolation can be used to estimate as below:

$$T_R = (T_{R2} - T_{R1}) / (I_{ON2} - I_{ON1}) * (I_{ON} - I_{ON1}) + T_{R1} \quad (2)$$

where:

- T_R is the desired T_R, which is 1000µs
- I_{ON} is the desired I_{ON}
- T_{R1} is the first T_R used for linear interpolation, which is 2350µs
- T_{R2} is the second T_R used for linear interpolation, which is 626µs
- I_{ON1} is the first I_{ON} used for linear interpolation, which is 20µA
- I_{ON2} is the second I_{ON} used for linear interpolation, which is 100µA

I_{ON} is calculated to be 82.6µA. To find the R_T value, plug in the parameters in Equation 1.

R_T = 1000 × (5V − 1.2V) / 82.6µA − 12.5kΩ = 33.5kΩ

By using the standard resistor value closest to 33.5kΩ, the typical rise time can be calculated for the actual resistor value used on board.

8.3 Power Supply Recommendations

The device is designed to operate from a V_{BIAS} range of 2.5V to 5.5V and a V_{IN} range of 0.6V to V_{BIAS}.

8.4 Layout

8.4.1 Layout Guidelines

For best performance, all traces must be as short as possible. To be most effective, the input and output capacitors must be placed close to the device to minimize the effects that parasitic trace inductances may have on normal operation. Using wide traces for V_{IN}, V_{OUT}, and GND helps minimize the parasitic electrical effects along with minimizing the case to ambient thermal impedance.

8.4.2 Layout Example

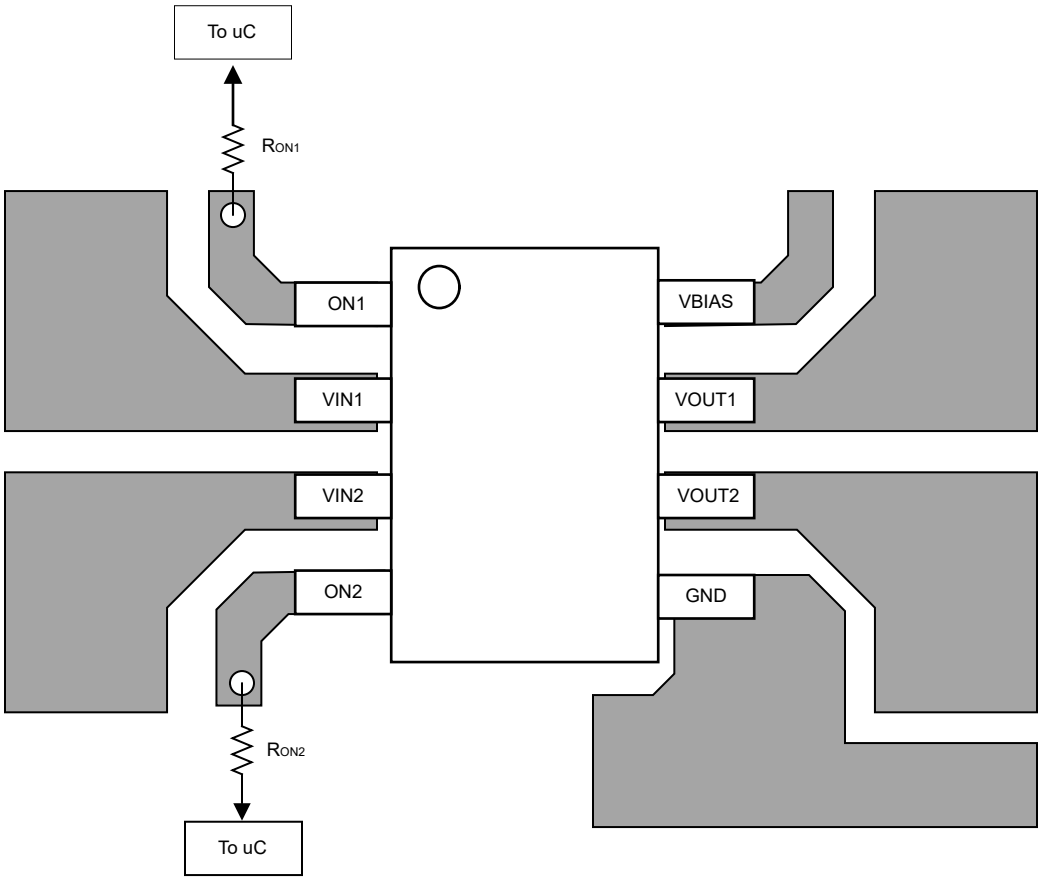

Figure 8-2. TPS22996H Layout Example

8.4.3 Power Dissipation

The maximum IC junction temperature must be restricted to 150°C under normal operating conditions. To calculate the maximum allowable power dissipation, $P_{D(max)}$ for a given output current and ambient temperature, use Equation 3.

$$P_{D(max)} = \frac{T_{J(max)} - T_A}{\theta_{JA}} \tag{3}$$

where

- $P_{D(max)}$ is the maximum allowable power dissipation.
- $T_{J(max)}$ is the maximum allowable junction temperature (150°C for the TPS22996H).

Copyright © 2024 Texas Instruments Incorporated

- T_A is the ambient temperature of the device.
- θ_{JA} is the junction to air thermal impedance. See Section 5.4. This parameter is highly dependent upon board layout.

9 Device and Documentation Support

9.1 Receiving Notification of Documentation Updates

To receive notification of documentation updates, navigate to the device product folder on ti.com. Click on *Notifications* to register and receive a weekly digest of any product information that has changed. For change details, review the revision history included in any revised document.

9.2 Support Resources

TI E2E™ support forums are an engineer's go-to source for fast, verified answers and design help — straight from the experts. Search existing answers or ask your own question to get the quick design help you need.

Linked content is provided "AS IS" by the respective contributors. They do not constitute TI specifications and do not necessarily reflect TI's views; see TI's Terms of Use.

9.3 Trademarks

TI E2E™ is a trademark of Texas Instruments.
All trademarks are the property of their respective owners.

9.4 Electrostatic Discharge Caution

This integrated circuit can be damaged by ESD. Texas Instruments recommends that all integrated circuits be handled with appropriate precautions. Failure to observe proper handling and installation procedures can cause damage.

ESD damage can range from subtle performance degradation to complete device failure. Precision integrated circuits may be more susceptible to damage because very small parametric changes could cause the device not to meet its published specifications.

9.5 Glossary

TI Glossary	This glossary lists and explains terms, acronyms, and definitions.

10 Revision History

NOTE: Page numbers for previous revisions may differ from page numbers in the current version.

Changes from Revision * (March 2024) to Revision A (October 2024)	Page
• Changed the document status From: *Advance Information* To: *Production Data*	1

11 Mechanical, Packaging, and Orderable Information

The following pages include mechanical, packaging, and orderable information. This information is the most-current data available for the designated devices. This data is subject to change without notice and without revision of this document. For browser-based versions of this data sheet, see the left-hand navigation pane.

Copyright © 2024 Texas Instruments Incorporated

PACKAGING INFORMATION

Orderable part number	Status (1)	Material type (2)	Package | Pins	Package qty | Carrier	RoHS (3)	Lead finish/ Ball material (4)	MSL rating/ Peak reflow (5)	Op temp (°C)	Part marking (6)
TPS22996HQDYCRQ1	Active	Production	SOT-5X3 (DYC) | 8	4000 | LARGE T&R	Yes	SN	Level-1-260C-UNLIM	-40 to 125	996HQ
TPS22996HQDYCRQ1.A	Active	Production	SOT-5X3 (DYC) | 8	4000 | LARGE T&R	Yes	SN	Level-1-260C-UNLIM	-40 to 125	996HQ

(1) **Status:** For more details on status, see our product life cycle.

(2) **Material type:** When designated, preproduction parts are prototypes/experimental devices, and are not yet approved or released for full production. Testing and final process, including without limitation quality assurance, reliability performance testing, and/or process qualification, may not yet be complete, and this item is subject to further changes or possible discontinuation. If available for ordering, purchases will be subject to an additional waiver at checkout, and are intended for early internal evaluation purposes only. These items are sold without warranties of any kind.

(3) **RoHS values:** Yes, No, RoHS Exempt. See the TI RoHS Statement for additional information and value definition.

(4) **Lead finish/Ball material:** Parts may have multiple material finish options. Finish options are separated by a vertical ruled line. Lead finish/Ball material values may wrap to two lines if the finish value exceeds the maximum column width.

(5) **MSL rating/Peak reflow:** The moisture sensitivity level ratings and peak solder (reflow) temperatures. In the event that a part has multiple moisture sensitivity ratings, only the lowest level per JEDEC standards is shown. Refer to the shipping label for the actual reflow temperature that will be used to mount the part to the printed circuit board.

(6) **Part marking:** There may be an additional marking, which relates to the logo, the lot trace code information, or the environmental category of the part.

Multiple part markings will be inside parentheses. Only one part marking contained in parentheses and separated by a "~" will appear on a part. If a line is indented then it is a continuation of the previous line and the two combined represent the entire part marking for that device.

Important Information and Disclaimer: The information provided on this page represents TI's knowledge and belief as of the date that it is provided. TI bases its knowledge and belief on information provided by third parties, and makes no representation or warranty as to the accuracy of such information. Efforts are underway to better integrate information from third parties. TI has taken and continues to take reasonable steps to provide representative and accurate information but may not have conducted destructive testing or chemical analysis on incoming materials and chemicals. TI and TI suppliers consider certain information to be proprietary, and thus CAS numbers and other limited information may not be available for release.

In no event shall TI's liability arising out of such information exceed the total purchase price of the TI part(s) at issue in this document sold by TI to Customer on an annual basis.

TAPE AND REEL INFORMATION

REEL DIMENSIONS

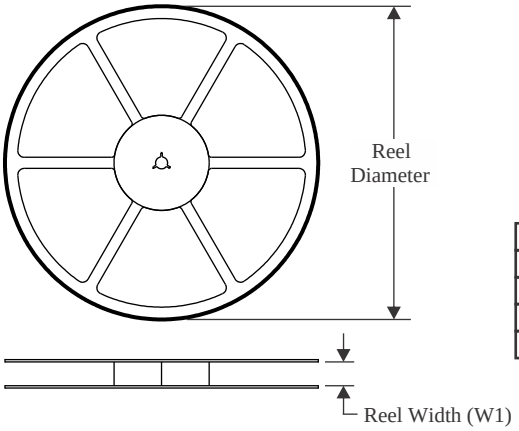

TAPE DIMENSIONS

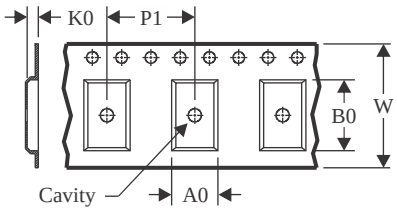

A0	Dimension designed to accommodate the component width
B0	Dimension designed to accommodate the component length
K0	Dimension designed to accommodate the component thickness
W	Overall width of the carrier tape
P1	Pitch between successive cavity centers

QUADRANT ASSIGNMENTS FOR PIN 1 ORIENTATION IN TAPE

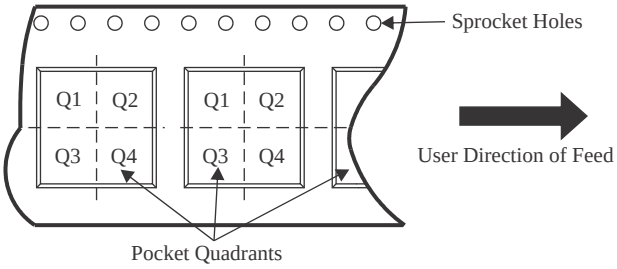

*All dimensions are nominal

Device	Package Type	Package Drawing	Pins	SPQ	Reel Diameter (mm)	Reel Width W1 (mm)	A0 (mm)	B0 (mm)	K0 (mm)	P1 (mm)	W (mm)	Pin1 Quadrant
TPS22996HQDYCRQ1	SOT-5X3	DYC	8	4000	180.0	8.4	2.45	1.85	0.8	4.0	8.0	Q3

TAPE AND REEL BOX DIMENSIONS

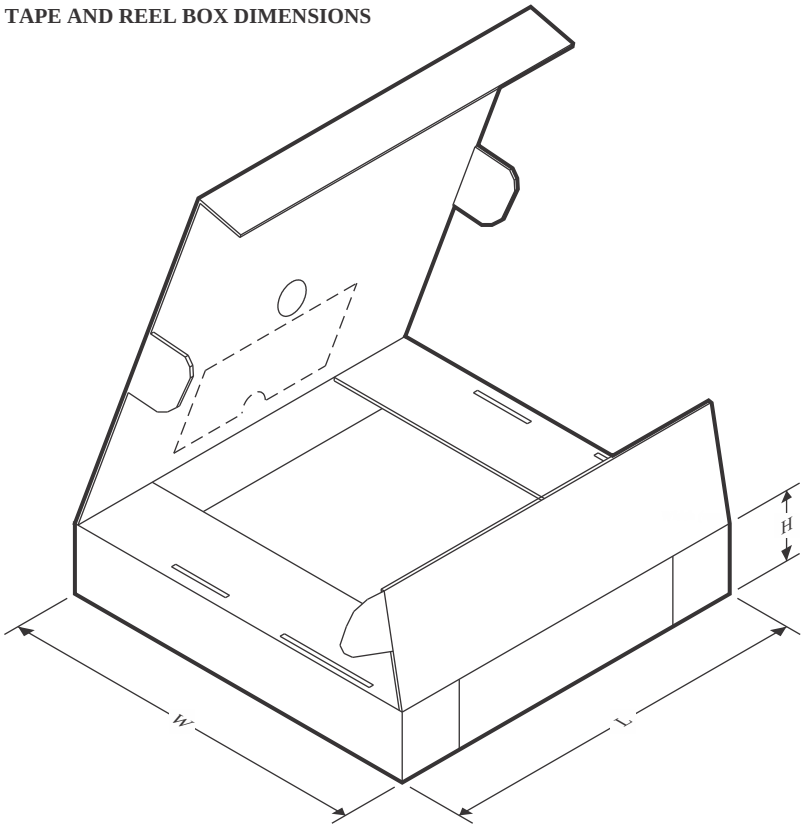

*All dimensions are nominal

Device	Package Type	Package Drawing	Pins	SPQ	Length (mm)	Width (mm)	Height (mm)
TPS22996HQDYCRQ1	SOT-5X3	DYC	8	4000	210.0	185.0	35.0

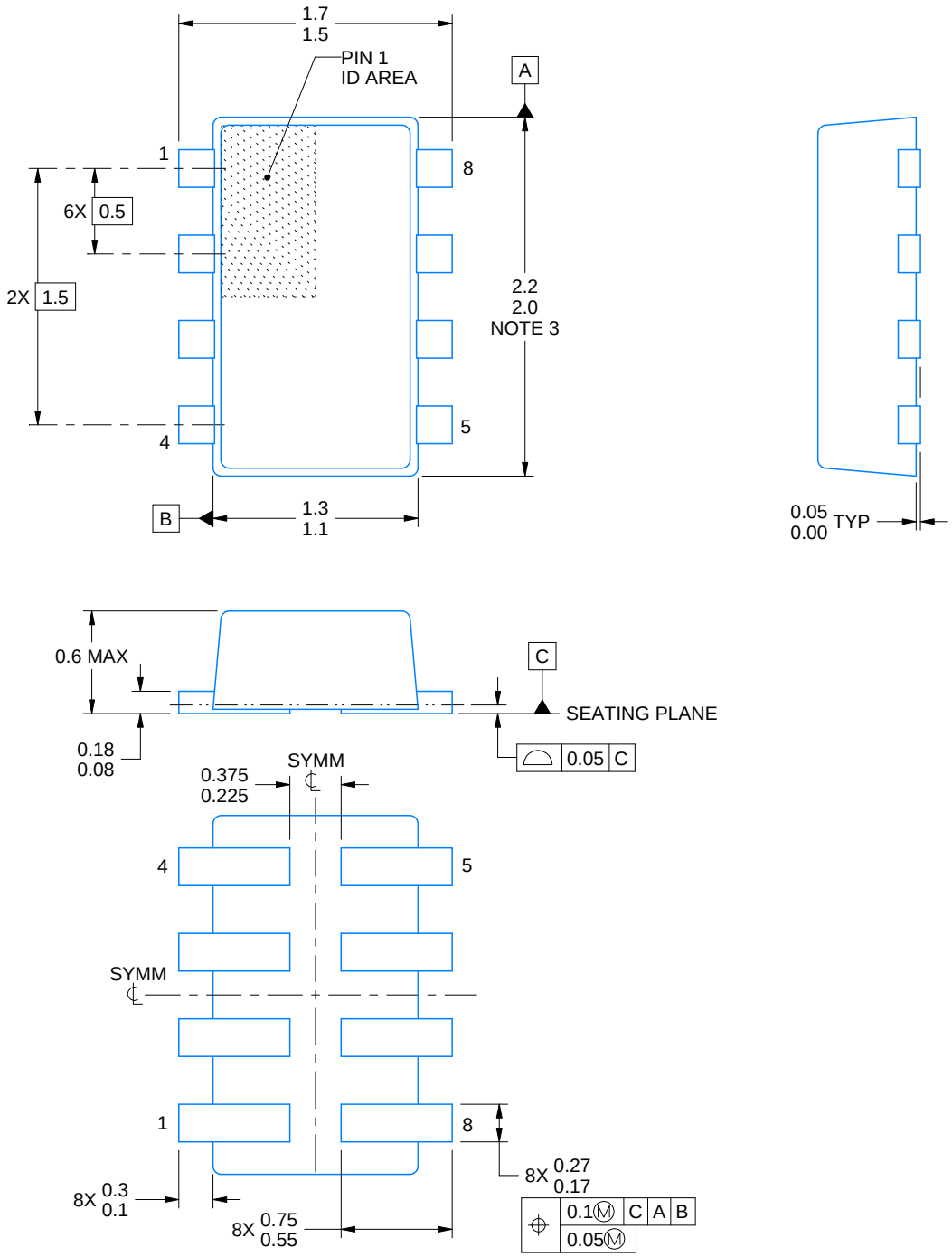

4226548/B 12/2021

NOTES:

1. All linear dimensions are in millimeters. Any dimensions in parenthesis are for reference only. Dimensioning and tolerancing per ASME Y14.5M.
2. This drawing is subject to change without notice.
3. This dimension does not include mold flash, protrusions, or gate burrs. Mold flash, protrusions, or gate burrs shall not exceed 0.15 mm per side.

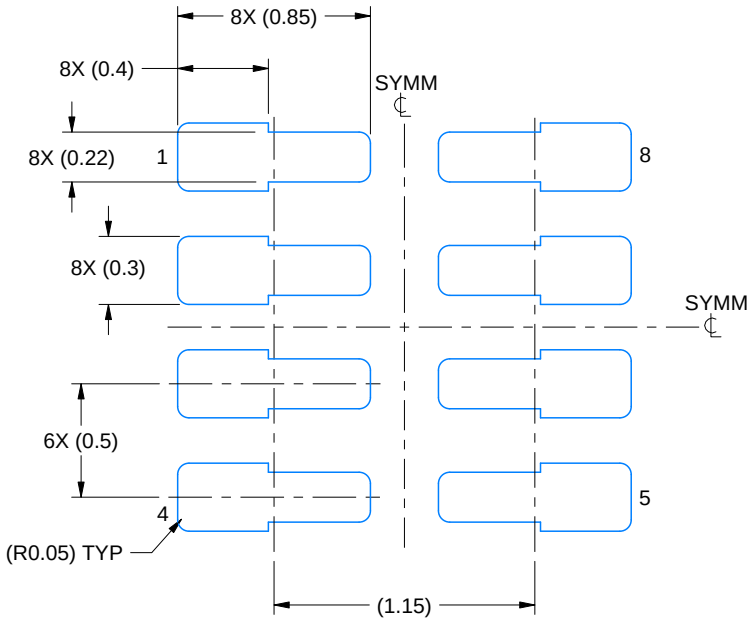

LAND PATTERN EXAMPLE
EXPOSED METAL SHOWN
SCALE:30X

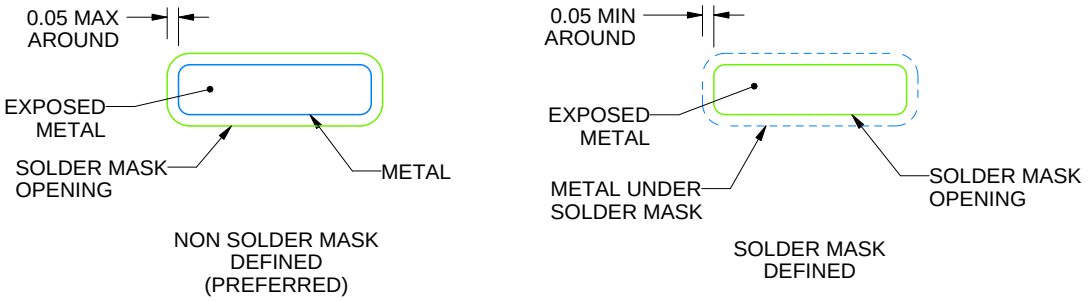

SOLDERMASK DETAILS

4226548/B 12/2021

NOTES: (continued)

4. Publication IPC-7351 may have alternate designs.
5. Solder mask tolerances between and around signal pads can vary based on board fabrication site.
6. Land pattern design aligns to IPC-610, Bottom Termination Component (BTC) solder joint inspection criteria.

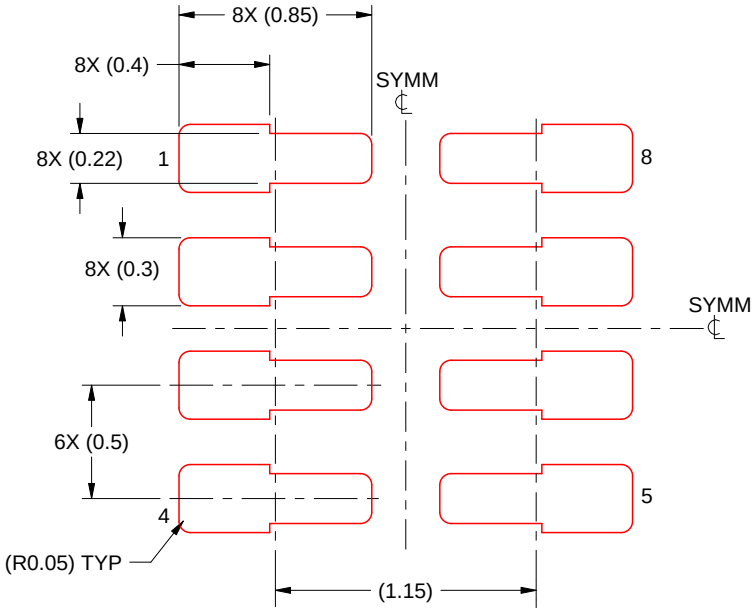

SOLDER PASTE EXAMPLE
BASED ON 0.1 mm THICK STENCIL
SCALE:30X

4226548/B 12/2021

NOTES: (continued)

7. Laser cutting apertures with trapezoidal walls and rounded corners may offer better paste release. IPC-7525 may have alternate design recommendations.
8. Board assembly site may have different recommendations for stencil design.

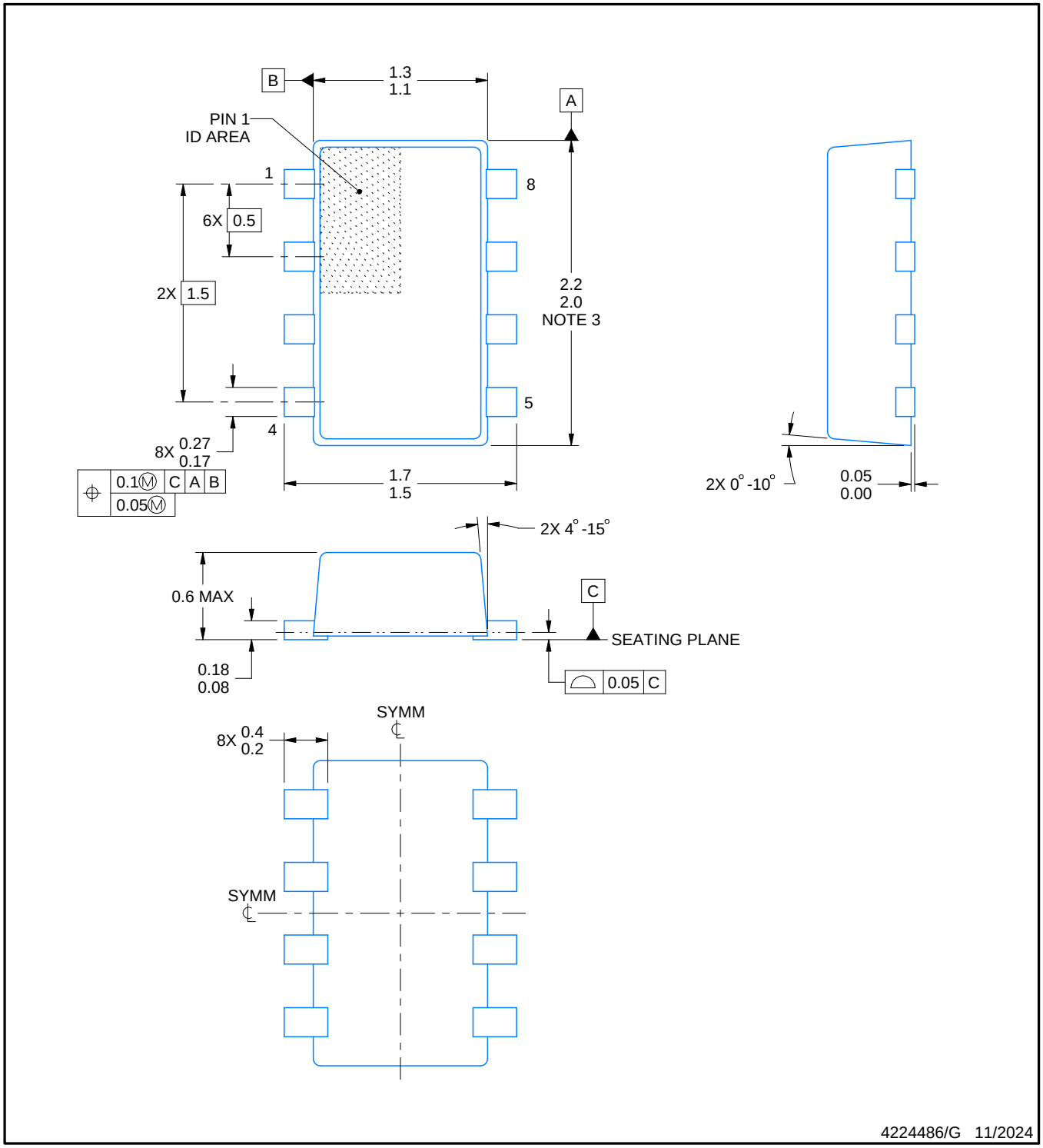

NOTES:

1. All linear dimensions are in millimeters. Any dimensions in parenthesis are for reference only. Dimensioning and tolerancing per ASME Y14.5M.
2. This drawing is subject to change without notice.
3. This dimension does not include mold flash, protrusions, or gate burrs. Mold flash, interlead flash, protrusions, or gate burrs shall not exceed 0.15 mm per side.
4. Reference JEDEC Registration MO-293, Variation UDAD

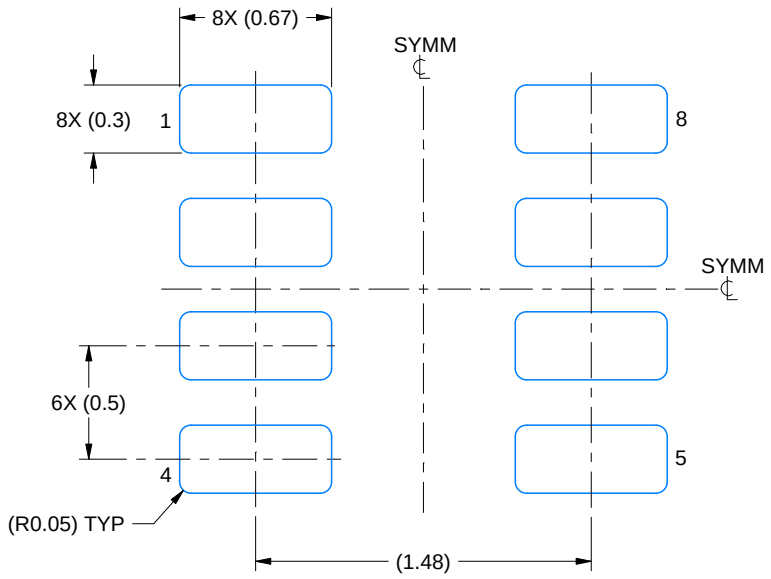

LAND PATTERN EXAMPLE
EXPOSED METAL SHOWN
SCALE:30X

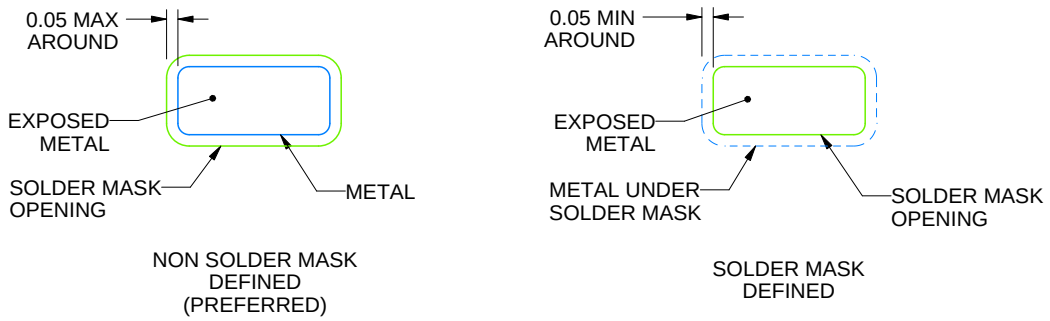

SOLDERMASK DETAILS

4224486/G 11/2024

NOTES: (continued)

5. Publication IPC-7351 may have alternate designs.
6. Solder mask tolerances between and around signal pads can vary based on board fabrication site.
7. Land pattern design aligns to IPC-610, Bottom Termination Component (BTC) solder joint inspection criteria.

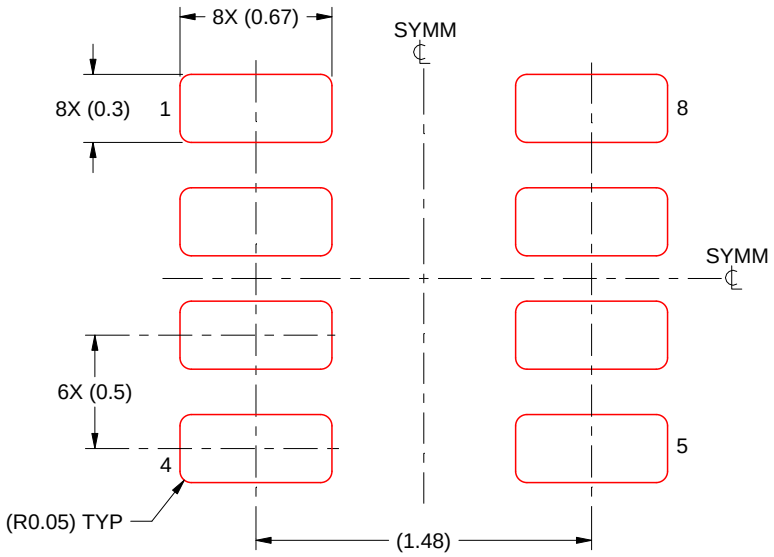

SOLDER PASTE EXAMPLE
BASED ON 0.1 mm THICK STENCIL
SCALE:30X

4224486/G 11/2024

NOTES: (continued)

8. Laser cutting apertures with trapezoidal walls and rounded corners may offer better paste release. IPC-7525 may have alternate design recommendations.
9. Board assembly site may have different recommendations for stencil design.

IMPORTANT NOTICE AND DISCLAIMER

TI PROVIDES TECHNICAL AND RELIABILITY DATA (INCLUDING DATASHEETS), DESIGN RESOURCES (INCLUDING REFERENCE DESIGNS), APPLICATION OR OTHER DESIGN ADVICE, WEB TOOLS, SAFETY INFORMATION, AND OTHER RESOURCES “AS IS” AND WITH ALL FAULTS, AND DISCLAIMS ALL WARRANTIES, EXPRESS AND IMPLIED, INCLUDING WITHOUT LIMITATION ANY IMPLIED WARRANTIES OF MERCHANTABILITY, FITNESS FOR A PARTICULAR PURPOSE OR NON-INFRINGEMENT OF THIRD PARTY INTELLECTUAL PROPERTY RIGHTS.

These resources are intended for skilled developers designing with TI products. You are solely responsible for (1) selecting the appropriate TI products for your application, (2) designing, validating and testing your application, and (3) ensuring your application meets applicable standards, and any other safety, security, regulatory or other requirements.

These resources are subject to change without notice. TI grants you permission to use these resources only for development of an application that uses the TI products described in the resource. Other reproduction and display of these resources is prohibited. No license is granted to any other TI intellectual property right or to any third party intellectual property right. TI disclaims responsibility for, and you fully indemnify TI and its representatives against any claims, damages, costs, losses, and liabilities arising out of your use of these resources.

TI’s products are provided subject to TI’s Terms of Sale, TI’s General Quality Guidelines, or other applicable terms available either on ti.com or provided in conjunction with such TI products. TI’s provision of these resources does not expand or otherwise alter TI’s applicable warranties or warranty disclaimers for TI products. Unless TI explicitly designates a product as custom or customer-specified, TI products are standard, catalog, general purpose devices.

TI objects to and rejects any additional or different terms you may propose.

Copyright © 2026, Texas Instruments Incorporated

Last updated 10/2025