TPS274C65xS 72mΩ, Quad-Channel Smart High-Side Switch With SPI Interface and Diagnostics

1 Features

- Quad-channel 72mΩ R_{ON} SPI-controlled smart high-side switch
  - Low R_{ON} ensures low power dissipation for 500mA to 2A DC loads
  - SPI control allows for simple isolation of control from output
- Adjustable current limiting enables improved system level reliability
  - TPS274C65AS, TPS274C65BS: Current limit set-point from 250mA to 2.2A
  - TPS274C65ASH: Current limit set-point from 290mA to 2.45A
- Capable of driving inductive, capacitive, and resistive loads
  - Dual current limit threshold for inrush current management
  - Integrated output clamp to demagnetize inductive loads
- Robust output protection
  - Integrated thermal shutdown
  - Protection against short to ground events
  - Configurable fault handling
- Diagnostic features enable improved module intelligence
  - Output load current measurements
  - Wire-break and short-to-supply detection
- Small 6mm × 6mm leadless package

2 Applications

- Industrial PLC system
  - Digital output module
  - IOLink master port
  - Sensor supply

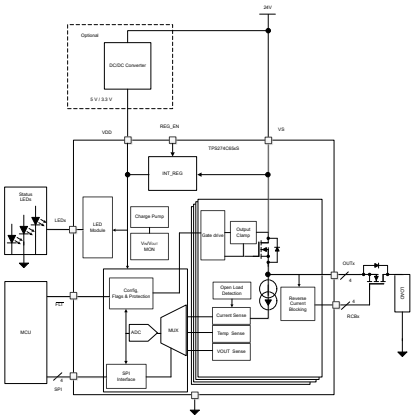

Typical Application Schematic

3 Description

The TPS274C65xS device is a quad-channel smart high-side switch with a serial interface (SPI) control and is designed to meet the requirements of industrial control systems. The low 72mΩ R_{DSON} minimizes device power dissipation even when providing large output load current. The device integrates protection and diagnostic features to ensure system protection even during harmful events like short circuits or load failures. The device protects against faults through a reliable current limit which is adjustable from 250mA to 2.45A to provide protection regardless of output load current. The TPS274C65xS has a configurable inrush current period which sets a higher current limit during turn-on for high inrush current loads, charging capacitive loads faster, or driving incandescent bulbs.

The TPS274C65xS also provides accurate current sense and an integrated analog to digital converter (AS) that allows for improved load diagnostics. By reporting load current digitally, the device allows for communication over any isolation barrier while enabling predictive maintenance and load diagnostics to improve system lifetime. Additional diagnostic features are integrated, such as on-state or off-state open load detection and short-to-supply detection.

The TPS274C65xS is available in a small 6mm × 6mm VQFN package with 0.5mm pin pitch, which minimizes design PCB footprint.

Package Information

PART NUMBER	PACKAGE(1)	PACKAGE SIZE(2)
TPS274C65xS	RHA (VQFN, 40)	6.00mm × 6.00mm

(1) For all available packages, see the orderable addendum at the end of the data sheet.
(2) The package size (length × width) is a nominal value and includes pins, where applicable.

An IMPORTANT NOTICE at the end of this data sheet addresses availability, warranty, changes, use in safety-critical applications, intellectual property matters and other important disclaimers. PRODUCTION DATA.

Table of Contents

1 Features....1
2 Applications....1
3 Description....1
4 Device Comparison Table....3
5 Pin Configuration and Functions....4
6 Specifications....7
6.1 Absolute Maximum Ratings....7
6.2 ESD Ratings....7
6.3 Recommended Operating Conditions....7
6.4 Thermal Information....8
6.5 Electrical Characteristics....8
6.6 Switching Characteristics....13
6.7 SPI Timing Requirements....14
6.8 Typical Characteristics....15
7 Parameter Measurement Information....16
8 Detailed Description....17
8.1 Overview....17
8.2 Functional Block Diagram....17
8.3 Feature Description....18
8.4 Device Functional Modes....48
8.5 TPS274C65BS Available Registers List....48
8.6 TPS274C65 Registers....51
9 Application and Implementation....75
9.1 Application Information....75
9.2 Typical Application....75
9.3 Power Supply Recommendations....78
9.4 Layout....78
10 Device and Documentation Support....80
10.1 Receiving Notification of Documentation Updates....80
10.2 Support Resources....80
10.3 Trademarks....80
10.4 Electrostatic Discharge Caution....80
10.5 Glossary....80
11 Revision History....80
12 Mechanical, Packaging, and Orderable Information....81

Copyright © 2024 Texas Instruments Incorporated

4 Device Comparison Table

Table 4-1. Functionality Comparison

Part Number	Interface	Reverse Current Blocking (RCB)	Integrated LED Driver	Integrated ADC	Current Limit Settings Allow for 2A Operation	Current Sense	Available Registers
TPS274C65**AS**	SPI	Yes	Yes	Yes	No	Digital via SPI or analog output	See TPS274C65 Registers
TPS274C65**ASH**	SPI	Yes	Yes	Yes	Yes	Digital via SPI or analog output	See TPS274C65 Registers
TPS274C65**BS**	SPI	No	No	No	No	No current sense	See TPS274C65BS Available Registers List

5 Pin Configuration and Functions

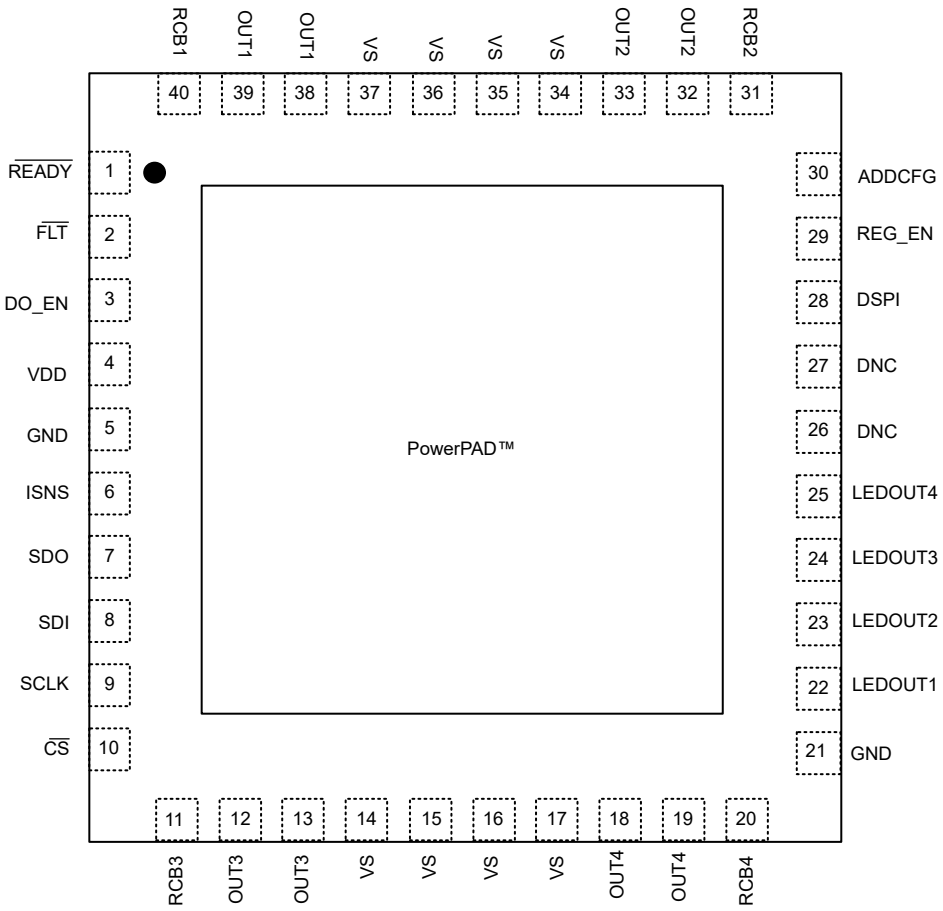

Figure 5-1. RHA Package, 40-Pin VQFN – AS and ASH Version (Top View)

Copyright © 2024 Texas Instruments Incorporated

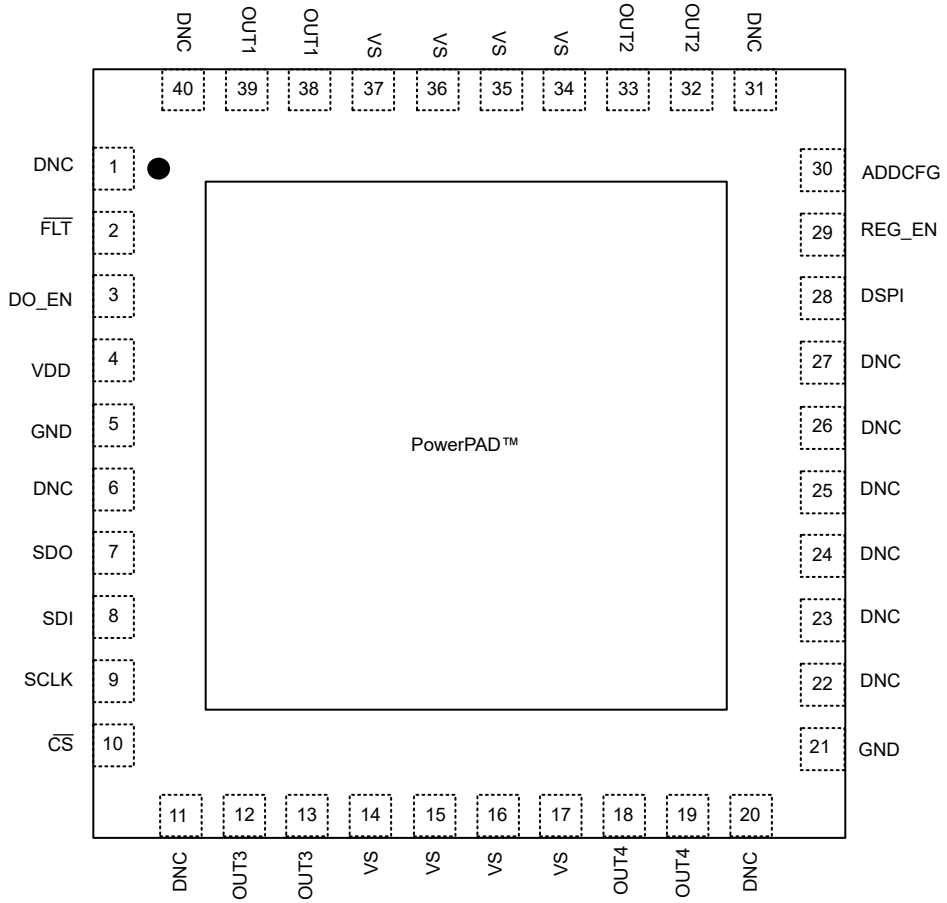

Figure 5-2. RHA Package, 40-Pin VQFN – BS Version (Top View)

Table 5-1. Pin Functions – Version AS and BS

Do not connect for pins labeled DNC

PIN			TYPE[1]	DESCRIPTION
NO.	TPS274C65AS, TPS274C65ASH	TPS274C65BS		
1	$\overline{\text{READY}}$	DNC[3]	O	Logic low output indicating the IC is ready for SPI data transmission (connect to GND pin of the IC with resistor).
2	$\overline{\text{FLT}}$	$\overline{\text{FLT}}$	O	Fault output – on any (one or more) channel - open drain, needs to be pulled up to VDD pin.
3	DO_EN	DO_EN	I	Setting this pin low would disable all of the outputs. Set high to enable SPI based output Internal pull-down.
4	VDD[2]	VDD[2]	P	Logic Supply Input[2] .
5, 21	GND	GND	—	Device ground.
6	ISNS	DNC[3]	O	SNS current output – use a parallel RC network to the GND pin of the IC.
7	SDO	SDO	O	SPI Data Output from the device.
8	SDI	SDI	I	SPI device (secondary) data input.
9	SCLK	SCLK	O	SPI Clock Input.
10	$\overline{\text{CS}}$	$\overline{\text{CS}}$	I	SPI Chip select.
11	RCB3	DNC[3]	O	Gate connection for reverse current blocking FET Ch3.
12, 13	OUT3	OUT3	O	Output voltage for channel 3.

Table 5-1. Pin Functions – Version AS and BS (continued)

Do not connect for pins labeled DNC

PIN			TYPE[1]	DESCRIPTION
NO.	TPS274C65AS, TPS274C65ASH	TPS274C65BS		
14–17	VS	VS	P	24V Switch Supply input to the IC.
18, 19	OUT4	OUT4	O	Output voltage for channel 4.
20	RCB4	DNC[3]	O	Gate connection for reverse current blocking FET Ch4.
22	LEDOUT1	DNC[3]	O	LED matrix select driver.
23	LEDOUT2	DNC[3]	O	LED matrix select driver.
24	LEDOUT3	DNC[3]	O	LED matrix select driver.
25	LEDOUT4	DNC[3]	O	LED matrix select driver.
26	DNC[3]	DNC[3]	—	Do not connect.
27	DNC[3]	DNC[3]	—	Do not connect.
28	DSPI	DSPI	I	Configure the device in daisy chain SPI mode when the pin is pulled HI.
29	REG_EN	REG_EN	I	Internal Regulator Enable pin, float to enable. Tie to GND to disable and use an external supply input to VDD.
30	ADDCFG	ADDCFG	I	SPI IC Address Configuration pin – set the 3-bit address of each IC (up to 8 on one board) with a resistor to GND pin of the IC. Leave floating if using Daisy Chain mode.
31	RCB2	DNC[3]	O	Gate connection for reverse current blocking FET Ch2.
32, 33	OUT2	OUT2	O	Output voltage for channel 2.
34–37	VS	VS	P	24V Switch Supply input to the IC.
38, 39	OUT1	OUT1	O	Output voltage for channel 1.
40	RCB1	DNC[3]	O	Gate connection for reverse current blocking FET Ch1.
Exposed Pad	GND	GND	I	Connected to GND pin of the IC.

(1) I = input, O = output, P = power.
(2) When the device is configured to support an external regulator connected to VDD, it is required that the supply input for the external regulator is derived from the same VS supply of TPS274C65 as shown in the Typical Application Schematic.
(3) Do not connect for pins labeled DNC.

Copyright © 2024 Texas Instruments Incorporated

6 Specifications

6.1 Absolute Maximum Ratings

Over operating free-air temperature range (unless otherwise noted)[1]

		MIN	MAX	UNIT
Continuous supply voltage, V_{VS} to IC_GND		–0.3	40	V
Maximum transient (< 1 ms) voltage at the supply pin (with respect to IC GND), V_{VS}, during ON state		–0.3	60	V
VOUT voltage to IC_GND		–30	V_{VS} + 0.3	V
V_{DS} voltage	V_{DS} voltage	–0.7	39	V
Low voltage supply pin voltage, V_{DD}	Low voltage supply pin voltage, V_{DD}	–0.3	7.0	V
Digital Input pin voltages, V_{DIG}		–0.3	7.0	V
LED drive pin voltage, V_{LED_OUT}		-0.3	7.0	V
Analog pin voltage REG_EN		–0.3	7.0	V
RCBx pin voltage, V_{RCBx}	RCBx pin voltage, V_{RCBx}	VOUT – 0.7	VOUT + 6	V
Sense pin voltage, V_{SNS}		–0.3	7.0	V
$\overline{FLT}$ pin voltage, $V_{\overline{FLT}}$	$\overline{FLT}$ pin voltage, $V_{\overline{FLT}}$	–0.3	7.0	V
Reverse ground current, I_{GND}	V_S < 0 V		–50	mA
Maximum junction temperature, T_J			150	°C
Storage temperature, T_{stg}		–65	150	°C

(1) Operation outside the *Absolute Maximum Ratings* may cause permanent device damage. *Absolute Maximum Ratings* do not imply functional operation of the device at these or any other conditions beyond those listed under *Recommended Operating Conditions*. If used outside the *Recommended Operating Conditions* but within the *Absolute Maximum Ratings*, the device may not be fully functional, and this may affect device reliability, functionality, performance, and shorten the device lifetime.

6.2 ESD Ratings

				VALUE	UNIT
V_{ESD1}	Electrostatic discharge	Human body model (HBM), per ANSI/ESDA/JEDEC JS-001[1]	All pins except VS and VOUTx	±2000	V
V_{ESD2}	Electrostatic discharge	Human body model (HBM), per ANSI/ESDA/JEDEC JS-001[1]	VS and VOUTx with respect to GND	±4000	V
V_{ESD3}	Electrostatic discharge	Charged device model (CDM), per ANSI/ESDA/JEDEC JS-002, all pins[2]	All pins	±500	V
V_{surge}	Electrostatic discharge	Surge protection with 42 Ω, per IEC 61000-4-5; 1.2/50 µs	VS, OUTx	±1000	V

(1) JEDEC document JEP155 states that 500-V HBM allows safe manufacturing with a standard ESD control process.
(2) JEDEC document JEP157 states that 250-V CDM allows safe manufacturing with a standard ESD control process.

6.3 Recommended Operating Conditions

over operating free-air temperature range (unless otherwise noted)

		MIN	MAX	UNIT
V_{S_OPMAX}	Nominal supply voltage	12	36	V
V_{DD}	Low voltage supply voltages	3.0	5.5	V
V_{DIG}	All digital input pin voltage	–0.3	5.5	V
V_{FLT}	$\overline{FLT}$ pin voltage	–0.3	5.5	V
V_{LED_OUTx}	LED_OUTx pin voltage	–0.3	5.5	V
V_{ANA}	REG_EN pin voltage	–0.3	5.0	V
V_{ANA}	SNS, ADDCFG pin voltage	–0.3	5.0	V
T_A	Operating free-air temperature	–40	125	°C

Copyright © 2024 Texas Instruments Incorporated

6.4 Thermal Information

THERMAL METRIC[1] [2]		TPS274C65X RHA (VQFN) 40 PINS	UNIT
$R_{\theta JA}$	Junction-to-ambient thermal resistance	25.4	°C/W
$R_{\theta JC(top)}$	Junction-to-case (top) thermal resistance	15.8	°C/W
$R_{\theta JB}$	Junction-to-board thermal resistance	7.6	°C/W
ψ_{JT}	Junction-to-top characterization parameter	0.2	°C/W
ψ_{JB}	Junction-to-board characterization parameter	7.6	°C/W
$R_{\theta JC(bot)}$	Junction-to-case (bottom) thermal resistance	0.6	°C/W

(1) For more information about traditional and new thermal metrics, see the SPRA953 application report.
(2) The thermal parameters are based on a 4-layer PCB according to the JESD51-5 and JESD51-7 standards.

6.5 Electrical Characteristics

V_{VS} = 11 V to 36 V, V_{VDD} = 3.0 V to 5.5 V, T_J = –40°C to 125°C (unless otherwise noted)

PARAMETER		TEST CONDITIONS		MIN	TYP	MAX	UNIT
INPUT VOLTAGE AND CURRENT							
V_{DS_Clamp} CHx	V_{DS} clamp voltage	FET current = 10 mA, V_S = 24 V		40	44	50	V
V_{DS_Clamp} CHx	V_{DS} clamp voltage	FET current = 10 mA, V_S = 19 V		40	44	50	V
V_{DS_Clamp} CHx	V_{DS} clamp voltage	FET current = 10 mA, V_S = 10 V		33	37	41	V
V_{S_UVPF}	V_S undervoltage protection falling	Measured with respect to the GND pin of the device, All channels ON	Output FETs turned off at VS less than this threshold.	8.6	9	9.3	V
V_{S_UVPR}	V_S undervoltage protection recovery rising	Measured with respect to the GND pin of the device, All channels ON	Output FETs turned ON at VS more than this threshold.	9.5	10	10.3	V
V_{S_UVPRH}	V_S undervoltage protection deglitch time	Time from triggering the UVP fault to FET turn-off		15	20	25	µs
V_{S_UVWF}	V_S undervoltage warning falling	Measured with respect to the GND pin of the device,	Reported in VS_UV_WRN register bit when below this threshold	12	12.5	13.5	V
V_{S_UVWR}	V_S undervoltage warning recovery rising	Measured with respect to the GND pin of the device,	VS_UV_WRN register bit cleared when below this threshold and register read	11.2	13.5	15.8	V
V_{S_UVLOF}	V_S undervoltage lockout falling	Measured with respect to the GND pin of the device	Device will hit POR and READY pin will be pulled low		3.0		V
$V_{S,UVLOR}$	V_S undervoltage lockout rising	Measured with respect to the GND pin of the device	READY pin will go high	2.7	3	3.3	V
$V_{DD,UVLOF}$	V_{DD} undervoltage lockout falling	Measured with respect to the GND pin of the device		2.7	2.8	2.9	V
$V_{DD,UVLOR}$	V_{DD} undervoltage lockout rising	Measured with respect to the GND pin of the device		2.8	2.88	2.98	V
IL_{NOM}	Continuous load current, per channel	All channels enabled, T_{AMB} = 85°C			1.6		A
		Two channels enabled, T_{AMB} = 85°C			2.5		A

Copyright © 2024 Texas Instruments Incorporated

6.5 Electrical Characteristics (continued)

V_{VS} = 11 V to 36 V, V_{VDD} = 3.0 V to 5.5 V, T_J = –40°C to 125°C (unless otherwise noted)

PARAMETER		TEST CONDITIONS		MIN	TYP	MAX	UNIT
$I_{OUT,LEAKX}$	Leakage current from OUT to GND in OFF state	Vs = VOUT < 36 V, Switch and all diagnostics disabled, measured into the OUTx pin				40	µA
$I_{OUT(OFF)}$	Output leakage current (per channel)	VS <= 36 V, V_{OUT} = 0 Channel disabled, diagnostics disabled Tj <= 125°C		0	0.8	10	µA
VDD I_Q	V_{DD} quiescent current, SCLK ON, all diagnostics disabled, (WB_OFF, WB_ON, SHRT_VS, ADC) external VDD	V_S ≤ 36 V, V_{DD} = 5.5 V All channels enabled, I_{OUTx} = 0 A			1.3	1.6	mA
VDD I_Q	V_{DD} quiescent current, SCLK ON, all diagnostics disabled, (WB_OFF, WB_ON, SHRT_VS, ADC) external VDD	V_S ≤ 36 V, V_{DD} = 3.0 V All channels enabled, I_{OUTx} = 0 A			1	1.2	mA
VDD I_Q	VDD quiescent current, SCLK off, all diagnostics disabled ((WB_OFF, WB_ON, SHRT_VS), ADC enabled and converting, external VDD	V_S ≤ 36 V, V_{DD} = 5.5 V All channels enabled, I_{OUTx} = 0 A			1.2	1.6	mA
VS I_Q	V_S quiescent current, SCLK off, all diagnostics disabled, (WB_OFF, WB_ON, SHRT_VS, ADC) internal VDD	V_S ≤ 36 V, All channels enabled, I_{OUTx} = 0 A			2.8	3.2	mA
VS I_Q	V_S quiescent current, SCLK off, all diagnostics (WB_OFF, WB_ON, SHRT_VS, ADC) enabled, external VDD	V_S ≤ 36 V, V_{DD} = 3.0 V All channels enabled, I_{OUTx} = 0 A			1.7	2.5	mA
VS I_Q	V_S quiescent current, SCLK off, all diagnostics (WB_OFF, WB_ON, SHRT_VS, ADC) disabled, RCB enabled, external VDD	V_S ≤ 36 V, V_{DD} = 3.0 V All channels enabled, I_{OUTx} = 0 A			1.4	2.45	mA
I_{leak_LG}	Leakage current out of the output pins with the GND of IC disconnected, Load ground connected to supply ground	V_S≤ 30 V, V_{DD} = 5.5 V, RL = 24 Ω All channels enabled			0.8	0.9	mA
RON CHARACTERISTICS							
R_{ON}	On-resistance (Includes MOSFET and package)	10 V ≤ V_S ≤ 36 V, I_{OUT1} = I_{OUT2} = 200 mA	T_J = 25°C		72		mΩ
			T_J = 125°C			110	mΩ
	On-resistance when 2 channels are paralleled (Includes MOSFET and package)	10 V ≤ V_S ≤ 36 V, I_{OUT1} = I_{OUT2} > 200 mA. V_{OUT1} tied to V_{OUT2}	T_J = 25°C		33		mΩ
			T_J = 125°C			55	mΩ
VDD_REG CHARACTERISTICS							
V_{VDD}	VDD Output voltage (Internal regulator enabled)	6 V ≤ V_S ≤ 36 V, I_{VDD} < 20 mA	Includes load and line regulation across the range.	3.1	3.3	3.6	V

6.5 Electrical Characteristics (continued)

V_{VS} = 11 V to 36 V, V_{VDD} = 3.0 V to 5.5 V, T_J = –40°C to 125°C (unless otherwise noted)

PARAMETER		TEST CONDITIONS		MIN	TYP	MAX	UNIT
LR_{VDD}	Load regulation of internal VDD regulator when enabled	6 V ≤ V_S ≤ 36 V, I_{VDD} < 20 mA				0.95	V/A
LR_{tran_VDD}	Load transient regulation of internal VDD regulator when enabled	6 V ≤ V_S ≤ 36 V, I_{VDD} <step from 5 mA to 15 mA in 10 µs	1 uF			10	mV
I_{CL_VDD}	Current Limit of internal regulator	6 V ≤ V_S ≤ 36 V		25		50	mA
CURRENT SENSE CHARACTERISTICS							
I_{SNSI} CHx	Current sense ratio I_{OUTx} / I_{SNS}	I_{OUTX} = 1 A, Range = 2.4 A	I_{OUTX} = 1 A		1160		
I_{SNSI} CHx	CHx Current sense current	Current Sense Diagnostic Enabled, R_{SNS} = 1kΩ	I_{OUTx} = 2 A	1.69	1.73	1.77	mA
			I_{OUT1} = 1 A	0.834	0.862	0.890	mA
			I_{OUT1} = 500 mA	0.410	0.424	0.45	mA
			I_{OUT1} = 200 mA	0.151	0.168	0.184	mA
			I_{OUT1} = 100 mA	0.068	0.081	0.092	mA
			I_{OUT1} = 50 mA	0.02	0.037	0.054	mA
I_{SNSI} CHx	CHx Current sense current	Current Sense Diagnostic Enabled, R_{SNS} = 1kΩ	I_{OUT1} = 20 mA	0.005	0.010	0.028	mA
I_{SNSI} CHx	CHx Current sense current	Current Sense Diagnostic Enabled, R_{SNS} = 1kΩ	I_{OUT1} = 10 mA	0.002	0.005	0.008	mA
I_{SNSI} CHx	CHx Current sense current	Current Sense Diagnostic Enabled, R_{SNS} = 1kΩ	I_{OUT1} = 5 mA	0.000	0.002	0.004	mA
ADC Performance Characteristics							
$V_{ADCEFfHI}$	ADC refernce voltage			2.72	2.8	2.85	V
Tconv1	ADC sample update time in each measurement					128	µs
SNS CHARACTERISTICS							
$T_{SNSout1}$	T_{SNS} output	T_J = –40°C			2.57		V
$T_{SNSout2}$	T_{SNS} output	T_J = 25°C			2.17		V
$T_{SNSout3}$	T_{SNS} output	T_J = 125°C			1.55		V
$VOUT_{SNS_CHx}$	$VOUT_{SNS}$ output	VOUT_CHx = 20 V			1.87		V
CURRENT LIMIT CHARACTERISTICS							

Copyright © 2024 Texas Instruments Incorporated

6.5 Electrical Characteristics (continued)

V_{VS} = 11 V to 36 V, V_{VDD} = 3.0 V to 5.5 V, T_J = –40°C to 125°C (unless otherwise noted)

PARAMETER		TEST CONDITIONS		MIN	TYP	MAX	UNIT
I_{CLx}	CHx I_{CL} current limitation level, H version	Regulated current at short circuit RL < 200 mohms when Enabled. VDD = 3.3 V.	Setting = 2.45 A	2.06	2.45	2.84	A
			Setting = 2.26 A	2.01	2.26	2.88	A
			Setting = 2.07 A	1.74	2.07	2.4	A
			Setting = 1.9 A	1.6	1.9	2.3	A
			Setting =1.71 A	1.42	1.71	1.94	A
			Setting = 1.52 A	1.2	1.52	1.78	A
			Setting = 1.33 A	1.06	1.33	1.6	A
			Setting = 1.15 A	0.94	1.15	1.36	A
			Setting = 0.96 A	0.78	0.96	1.1	A
			Setting = 0.86 A	0.72	0.86	1.02	A
			Setting = 0.76 A	0.64	0.76	0.88	A
			Setting = 0.67 A	0.53	0.67	0.78	A
			Setting = 0.57 A	0.47	0.57	0.65	A
			Setting = 0.48 A	0.4	0.48	0.55	A
			Setting = 0.38 A	0.3	0.38	0.45	A
			Setting = 0.29 A	0.22	0.29	0.39	A
I_{CLx}	CHx I_{CL} current limitation level	Regulated current at short circuit RL < 200 mohms when Enabled. VDD = 3.3 V.	Setting = 2.2 A	1.85	2.2	2.55	A
			Setting = 1.9 A	1.6	1.9	2.3	A
			Setting = 1.75 A	1.5	1.75	2.05	A
			Setting = 1.6 A	1.35	1.6	1.85	A
			Setting =1.5 A	1.19	1.5	1.75	A
			Setting = 1.25 A	1	1.25	1.5	A
			Setting = 1.1 A	0.9	1.1	1.3	A
			Setting = 1 A	0.85	1	1.15	A
			Setting = 0.85 A	0.72	0.85	1	A
			Setting = 0.72 A	0.62	0.72	0.82	A
			Setting = 0.67 A	0.53	0.67	0.78	A
			Setting = 0.56 A	0.47	0.56	0.63	A
			Setting = 0.48 A	0.4	0.48	0.55	A
			Setting = 0.4 A	0.32	0.4	0.47	A
			Setting = 0.33 A	0.26	0.33	0.39	A
			Setting = 0.25 A	0.19	0.25	0.33	A
I_{CL_LINPK}	Overcurrent limit threshold	Threshold before current limiting - Overload condition	Setting = 2.2 A V_{VS} – V_{VOUT} < 1 V			2.75	A
I_{CL_LINPK}	Overcurrent limit threshold	Threshold before current limiting - Overload Conditions	Setting = 0.85 A V_{VS}- V_{VOUT} < 1V			1.1	A
I_{CL_PK1}	Peak current before regulation while enabling switch into 100 mohm load	T_J = –40°C to 125°C VS = 24 V, Minimum inductance = 2.2 µH	Settting = 2.2 A			10	A
I_{CL_PK2}	Peak current threshold when short is applied while switch enabled	T_J = –40°C to 125°C VS = 24 V, Minimum inductance = 2.2 µH	Settting = 2.2 A			9.4	A

Copyright © 2024 Texas Instruments Incorporated

6.5 Electrical Characteristics (continued)

V_{VS} = 11 V to 36 V, V_{VDD} = 3.0 V to 5.5 V, T_J = –40°C to 125°C (unless otherwise noted)

PARAMETER		TEST CONDITIONS		MIN	TYP	MAX	UNIT
I_{CL_P}	Parallel I_{CL} Current Limitation Level	Regulated current at short circuit RL < 200 mohms when Enabled	Settting = 2.2 A		4.3		A
$I_{CL_PK1_P}$	Paralled Peak current enabling into permanent short	T_J = –40°C to 125°C VS = 24V, Minimum inductance = 2.2 µH	Settting = 2.2 A			6.4	A
$I_{CL,PARALLEL}$	Paralled Channels Current Limit Accuracy Multiplier	V_{OUT1} tied to V_{OUT2}, parallel channel mode enabled	Settting = 2.2 A	0.9		1.1	
FAULT CHARACTERISTICS							
$I_{WB_ON_TH}$	Wire-break (WB) or Open-load (OL) detection on-state threshold	Switch enabled, WB_ON_CHx = enabled WB_ON_TH_= 000		0.38	0.49	0.61	mA
I_{WB_OFF}	Off State Wirebreak or Open-load (OL) detection internal pullup current	Switch disabled, WB_OFF_CHx = enabled WB_PU=00		38	51	64	µA
$V_{SHRT_VS_TH}$	Off state short to VS detection voltage	Channel Disabled, off-state short_VS diagnostics enabled			12.0		V
$V_{WB_OFF_PU}$	Off state WireBreak (WB) or Open-load (OL) detection pull up current source voltage	Channel Disabled, off-state wire-break diagnostics enabled			6.7		V
$V_{WB_OFF_TH}$	Off state WireBreak (WB) or Open-load (OL) detection voltage	Channel Disabled, off-state wire-break diagnostics enabled		5.6	6	6.5	V
t_{RCB_DGL}	CHx RCB Fault Deglitch time	Channel Enabled, RCB enabled			1.2		ms
T_{ABS}	Thermal shutdown			160	185	210	°C
T_{OTW}	Thermal shutdown warning			110	130	150	°C
T_{HYS}	Thermal shutdown hysteresis			20	27	35	°C
V_{ol_FLT}	Fault low-output voltage	I_{FLT} = 2 mA, sink current into the pin				0.4	V
t_{RETRY}	Retry time	Time from thermal shutdown until switch re-enable.			0.6		ms
t_{RCB_F}	Reverse current protection comparator delay	Time from VS – VOUT < 50 mV overdrive to FET gate off		1.6	2	2.4	µs
V_{RCB_F}	V(VS) – V(OUT) threshold for reverse protection comparator, falling			-104	-64	-23	mV
$t_{RCB_comp_reset}$	RCB internal comparator reset interval				100		ms
V_{RCB_pu}	RCBx FET gate voltage				6	7	V
V_{RCB_R}	V(VS) – V(OUT) threshold for reverse protection comparator, rising			28	45	58	mV
DIGITAL INPUT PIN CHARACTERISTIC							
$V_{IH, DIG}$	DIG pin Input voltage high-level	3.0 V ≤ VDD ≤ 5.5 V		0.7 × V_{VDD}			V

Copyright © 2024 Texas Instruments Incorporated

6.5 Electrical Characteristics (continued)

V_{VS} = 11 V to 36 V, V_{VDD} = 3.0 V to 5.5 V, T_J = –40°C to 125°C (unless otherwise noted)

PARAMETER		TEST CONDITIONS	MIN	TYP	MAX	UNIT
$V_{IL, DIG}$	DIG pin Input voltage low-level	3.0 V ≤ VDD ≤ 5.5 V			0.3 × V_{VDD}	V
R_{REG_EN}	Internal pullup resistance for REG_EN pin			1		MΩ
R_{DIGx}	Internal pulldown resistor		0.7	1	2.0	MΩ
$I_{IH, DIG}$	Input current high-level	V_{DIG} = 5 V		5		µA
DIGITAL OUTPUT PIN CHARACTERISTICS						
V_{OH}	Output Logic High Voltage Drop	READY Pin current = –4 mA	-0.5			V
V_{OL_SDO}	Output Logic Low Voltage	SDO Pin current = –4 mA			0.2	V
V_{OL_FLT}	Output Logic Low Voltage	FLT Pin current = –4 mA			0.4	V
LED DRIVER CHARACTERISTICS						
V_{drop_HL14}	LED High Side / Low side drop Channels 1 and 4	I_LED (average current over 4 phases) = 4 mA, LED switch current = 16 mA			0.2	V
V_{drop_HL23}	LED High Side / Low side drop Channels 2 and 3	I_LED (average current over 4 phases) = 4 mA, LED switch current = 32 mA			0.2	V
f_{PWM_LED}	LED driver PWM frequency			1000		Hz

6.6 Switching Characteristics

V_S = 6 V to 36 V, T_J = –40°C to +125°C (unless otherwise noted)

PARAMETER		TEST CONDITIONS	MIN	TYP	MAX	UNIT
t_{DR}	CHx Turnon delay time	V_S = 24 V, R_L = 48 Ω 50% of EN to 10% of VOUT	5	18	25	µs
t_{DF}	CHx Turnoff delay time	V_S = 24 V, R_L = 48 Ω 50% of EN to 90% of VOUT	16	24	33	µs
$SR2_R$	VOUTx rising slew rate	V_S = 24 V, 25% to 75% of V_{OUT}, R_L = 48 Ω,	1	1.6	2.2	V/µs
$SR2_F$	VOUTx falling slew rate	V_S = 24 V, 75% to 25% of V_{OUT}, R_L = 48 Ω,	1	1.4	1.8	V/µs
f_{max}	Maximum PWM frequency				1	kHz
t_{ON}	CHx Turnon time	V_S = 24 V, R_L = 48 Ω 50% of EN to 90% of VOUT		33	42	µs
t_{OFF}	CHx Turnoff time	V_S = 24 V, R_L = 48 Ω 50% of EN to 10% of VOUT		46	57	µs
t_{ON} - t_{OFF}	CHx Turnon and off matching	1ms ON time switch enable pulse V_{BB} = 24 V, R_L = 48 Ω	–41	–7	23	µs
t_{ON} - t_{OFF}	CHx Turnon and off matching	100-µs OFF time switch enable pulse, V_S = 24 V, R_L = 48 Ω, F = f_{max}	–41	–7	23	µs
t_{ON} - t_{OFF}	CHxTurnon and off matching	100-µs ON time switch enable pulse, V_S = 24 V, R_L = 48 Ω, F = f_{max}	–41	–7	23	µs
Δ_{PWM}	CHx PWM accuracy - average load current	200-µs enable pulse, V_S = 24 V, R_L = 48 Ω F = f_{max}	–20		20	%

Copyright © 2024 Texas Instruments Incorporated

6.7 SPI Timing Requirements

Over operating junction temperature T_J = –40°C to 125°C and operating V_{VS} = 2.3 to 36 V (unless otherwise noted).

			MIN	NOM	MAX	UNIT
t_{SPI}	SPI clock (SCLK) period	C_{SDO} = 30 pF;	100			ns
t_{high}	High time: SCLK logic high-time duration		45			ns
t_{low}	Low time: SCLK logic low-time duration		45			ns
t_{sucs}	NCS setup time: Time delay between falling edge of NCS and rising edge of SCLK		45			ns
t_{su_SDI}	SDI setup time: Setup time of SDI before the falling edge of SCLK		15			ns
t_{h_SDI}	SDI hold time: Hold time of SDI before the falling edge of SCLK		30			ns
t_{d_SDO}	Delay time: Time delay from rising edge of SCLK to data valid at SDO				30	ns
t_{hcs}	Hold time: Time between the falling edge of SCLK and rising edge of NCS		45			ns
t_{dis_cs}	nCS disable time, nCS high to SDO high impedance			10		ns
t_{hics}	SPI transfer inactive time (time between two transfers) during which NCS must remain high		500			ns

Copyright © 2024 Texas Instruments Incorporated

6.8 Typical Characteristics

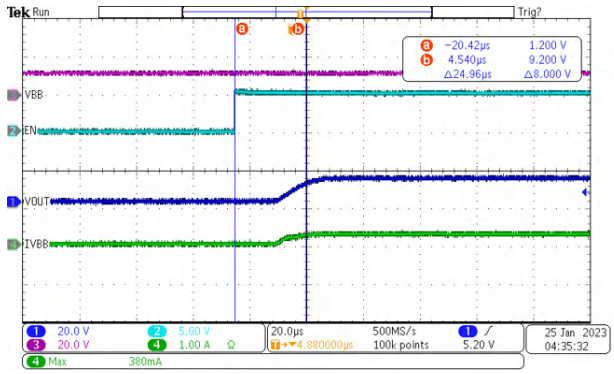

V_{EN} = 0 to 5 V VS = 12 V T_{AMB} = 25°C

Figure 6-1. Turn-on Time (tON)

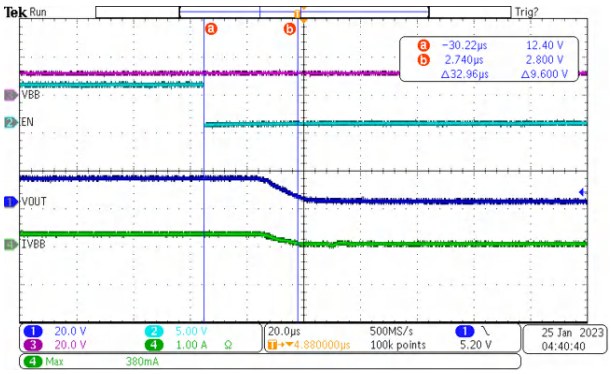

V_{EN} = 5 to 0 V VS = 12 V T_{AMB} = 25°C

Figure 6-2. Turn-off Time (tOFF)

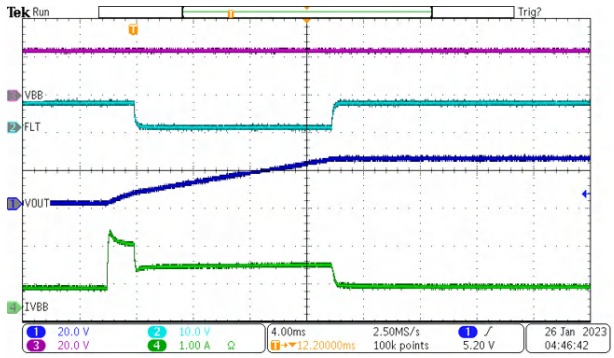

VS = 24 V T_{AMB} = 25°C R_{LOAD} = 470 µF + 50 Ω

ILIM_REG[3:0] = 0x5 ILIM_REG[7:4] = 0x1 INRUSH_LIMIT[1:0] = 0x1

Figure 6-3. Charging a 470-µF Capacitor

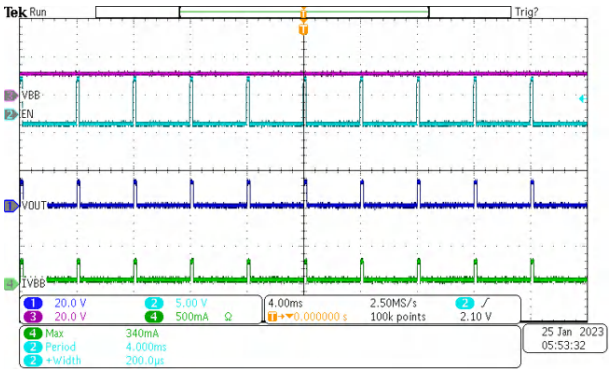

VS = 12 V PWM Frequency = 250 Hz Duty Cycle = 5%

T_{AMB} = 25 °C R_{LOAD} = 48Ω

Figure 6-4. Switching the Part With 250-Hz PWM Signal

7 Parameter Measurement Information

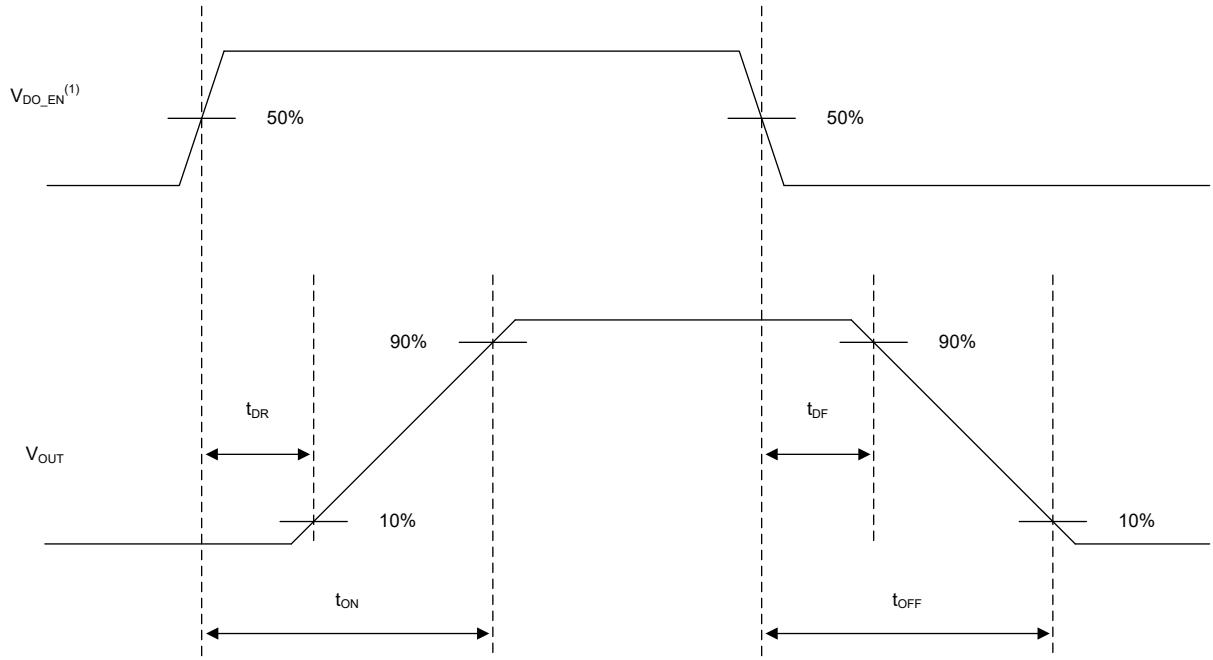

Copyright © 2017, Texas Instruments Incorporated

(1) Rise and fall time of V_{DO_EN} is 100 ns.

Figure 7-1. Switching Characteristics Definitions

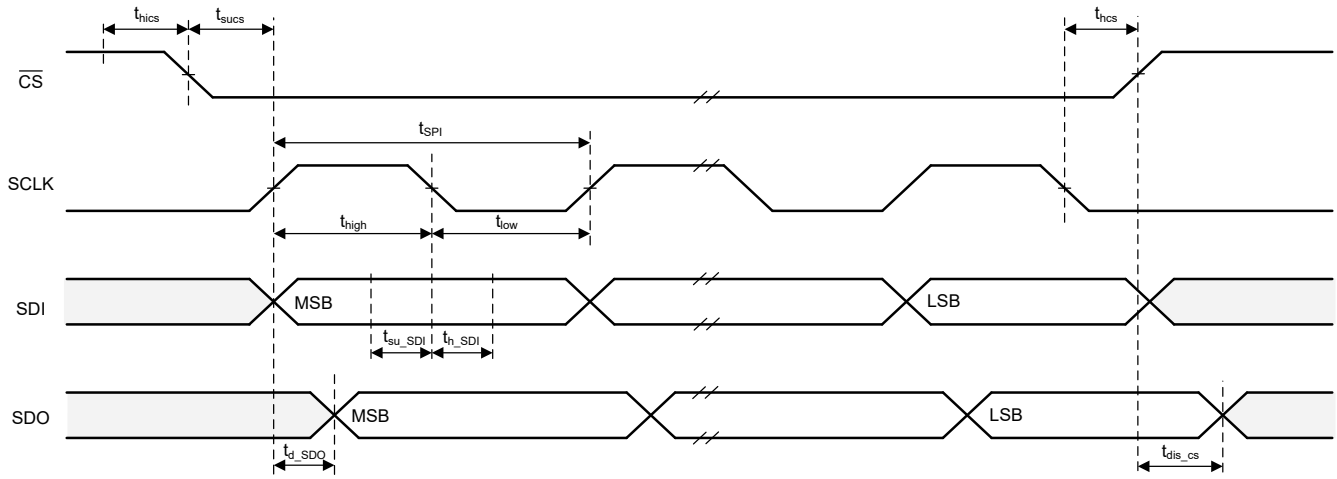

Figure 7-2. SPI Timing

Copyright © 2024 Texas Instruments Incorporated

8 Detailed Description

8.1 Overview

The TPS274C65 device is a quad channel 72-mΩ smart high-side switch intended for use for output ports with protection for 24-V industrial systems. The device is designed to drive a variety of resistive, inductive and capacitive loads. The device integrates various protection features including overload protection through current limiting, thermal protection, short-circuit protection, and reverse current protection. For more details on the protection features, refer to the *Feature Description* and *Application Information* sections of the document.

In addition, the device diagnostics features include a digital per-channel readout of output current, output voltage and FET temperature. The high-accuracy load current sense allows for integration of load measurement features that can enable predictive maintenance for the system by watching for leading indicators of load failures. The device also integrates open load detection in on and off states to enable protection against wire breaks. In addition, the device includes an open drain $\overline{FLT}$ pin output that indicates device fault states such as short to GND, short to supply, overtemperature, and the other fault states discussed.

8.2 Functional Block Diagram

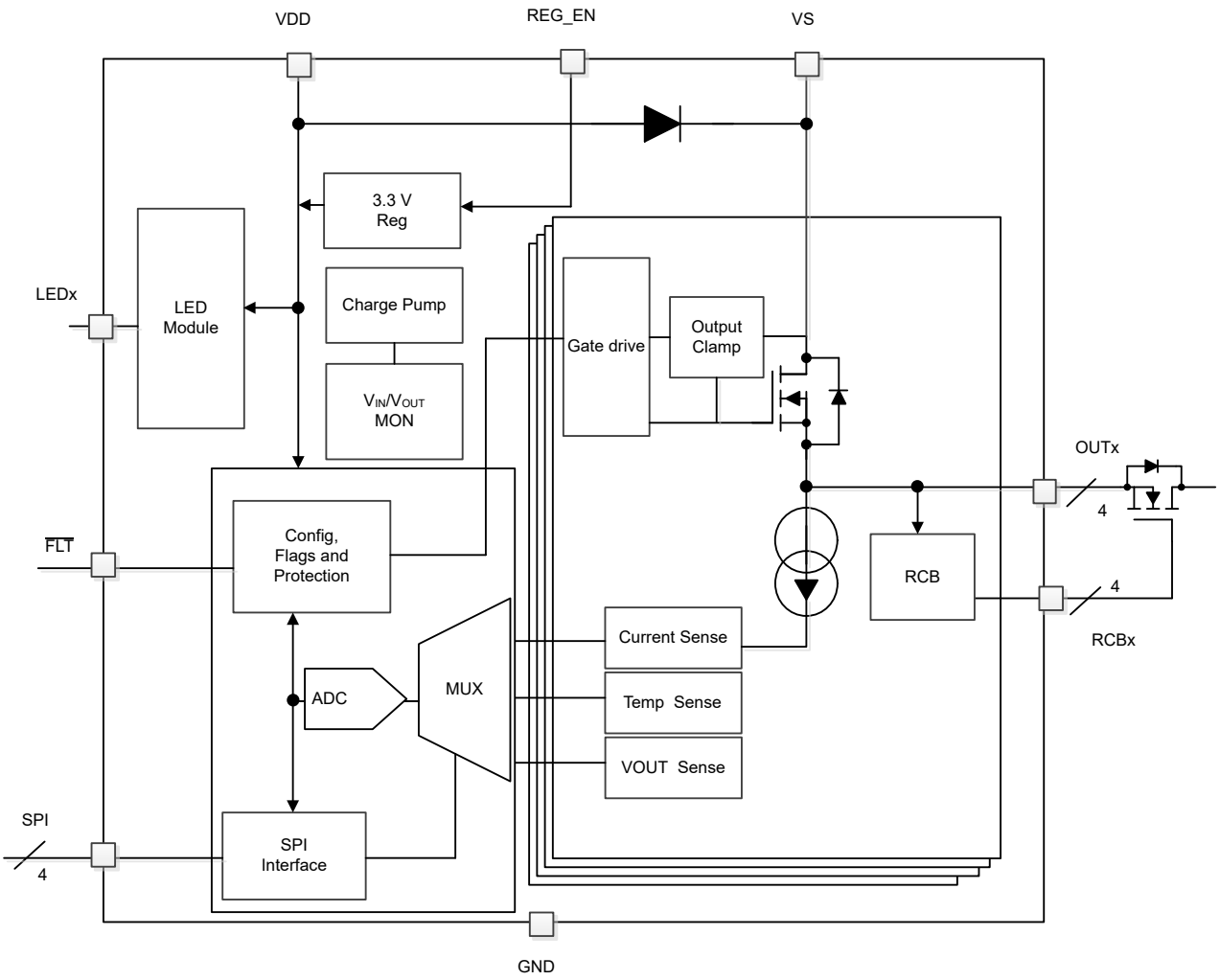

8.3 Feature Description

8.3.1 Pin Diagrams

This section presents the I/O structure of all digital input and output pins.

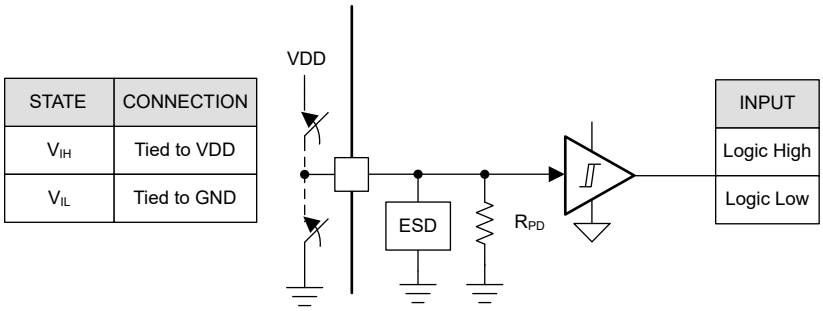

Figure 8-1. Logic Level Input Pin

Figure 8-2 shows the input structure for the logic levels pin, $\overline{CS}$. The input can be with a voltage or external resistor.

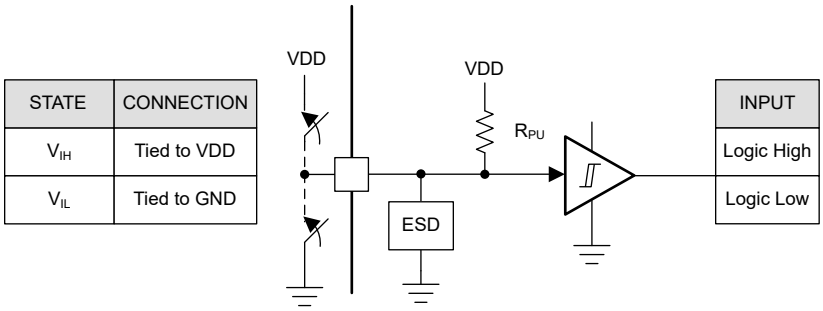

Figure 8-2. Logic Level Input Pin ($\overline{CS}$)

Figure 8-3 shows the structure of the open-drain output pin, $\overline{FAULT}$. The open-drain output requires an external pullup resistor to function properly.

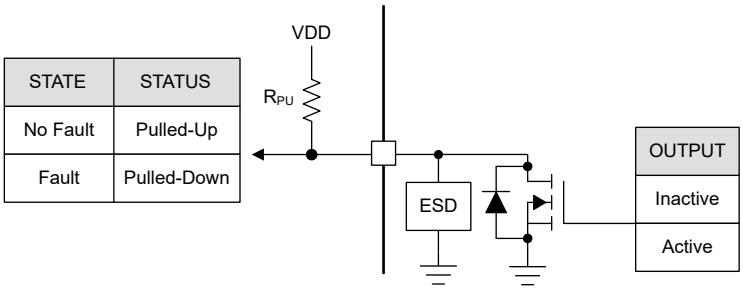

Figure 8-3. Open Drain Output Pin ($\overline{FAULT}$)

8.3.2 SPI Mode Operation

The TPS274C65xS communicates with the host controller through a high-speed SPI serial interface. The interface has three logic inputs: clock (CLK), chip select ($\overline{CS}$), serial data in (SDI), and one data out (SDO). The SDO is three-stated when CS is high. The maximum SPI clock rate is 10 MHz. The capacitance at SPI communication pins (CLK, $\overline{CS}$, SDI, SDO) needs to be minimized to achieve high SPI communication frequencies.

The device supports both simple daisy chain1 and addressable SPI; the selection of mode is from the DSPI pin. The main advantage of the addressable SPI mode is that diagnostics and configuration is easier. The two

Copyright © 2024 Texas Instruments Incorporated

different modes of SPI that is fixed for a given system implementation and cannot be changed dynamically or on the fly. The two modes can be used with or without CRC.

The two modes are described in detail:

1. Addressable SPI mode - non-daisy-chained SPI bus with one single/shared CS through chip addressing. Each chip on the shared SPI is assigned an individual chip address with the address set through a resistor (three-bit address for the chip). Addressed SPI (DSPI pin pulled low) allows direct communication with up to eight TPS274C65xS on a shared SPI using a single shared CS signal. The three-bit address of each IC (up to eight on one board) is set with a resistor to GND on this pin Addressed SPI offers the advantage of direct chip access. CRC check is enabled when CRCEN=1. The SPI main device addresses a specific chip by sending the appropriate A2, A1, A0 logic in the first three bits of the SPI read/write command. The TPS274C65xS monitors the SPI address in each SPI read or write cycle and responds appropriately when the address matches the programmed address for that IC. The added advantage is that it is possible to update the SW state register and read the data in the various read only fault and data registers in every read as well as write command frame. The transmission speed will be faster for addressable SPI compared to the daisy chain SPI as the direct data transmission will happen immediately once the address is transmitted.
2. Daisy chain SPI mode is enabled by setting DSPI pin high. In this mode, multiple TPS274C65xS devices are configured in a serial fashion. In the 16-bit daisy-chain mode, only a minimum read capability and Switch state ON/OFF write is possible- the FAULT status can be read out on each write to the switch ON-OFF register. It is not possible to write to the LED registers or re-configure the device and at the same time update the switch state. However, it is possible to update the SW state register and read the data in the various read only fault and data registers. The 24-bit SPI format allows the write to the SW_STATE register in every read as well as write command frame as well enable CRC. The speed of the transmission for daisy chain will be depending on the CLK frequency as well as the number of devices connected in series.

The communication between the TPS274C65 IC and the controller or MCU is through a SPI bus in a master-slave configuration. The external MCU is always an SPI master that sends command requests on the SDI pin of the TPS274C65 IC and receives device responses on the SDO pin of the IC. The TPS274C65 device is always an SPI slave device that receives command requests and sends responses (such as status and measured values) to the external MCU over the SDO line. The following lists the characteristics of the SPI:

The TPS274C65 device can be connected to the master MCU in the following formats.

- One slave device

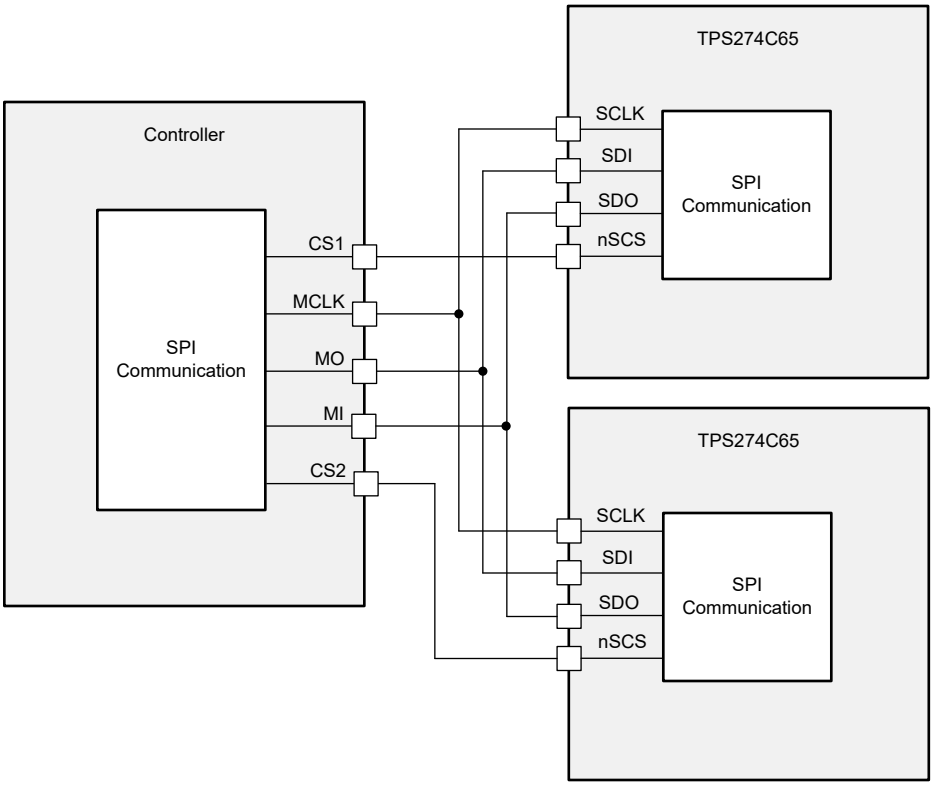

Figure 8-4. Independent Slave Configuration

- Multiple slave devices in parallel connection (addressable SPI mode)

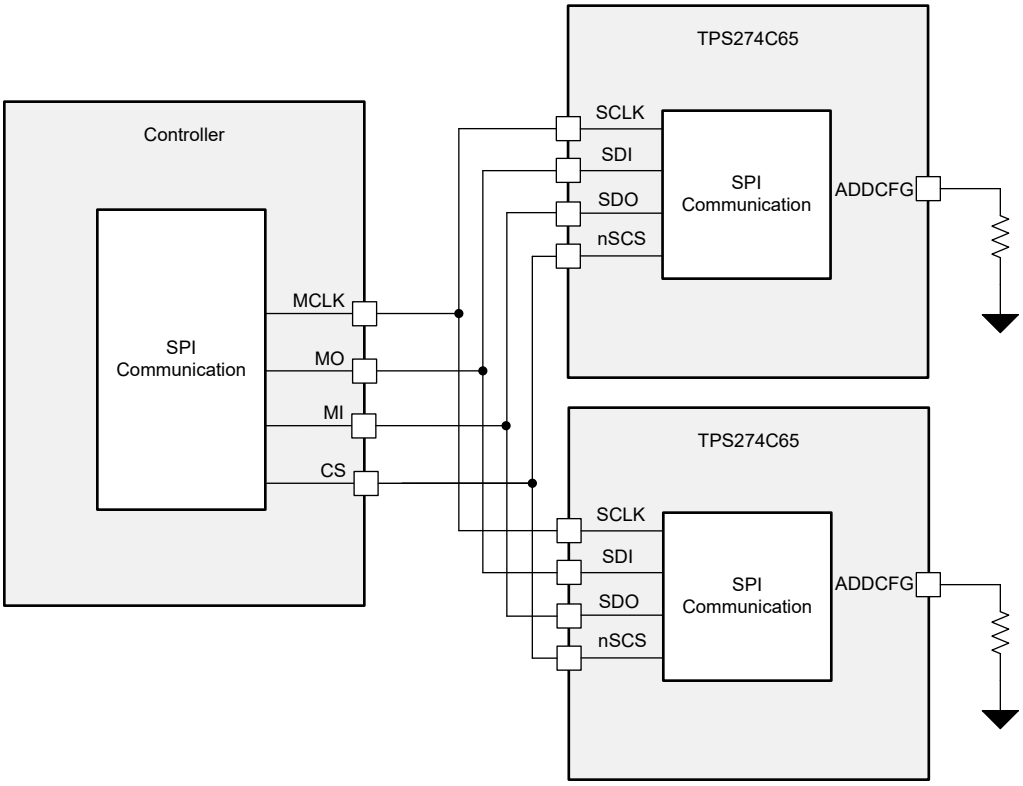

Figure 8-5. Addressable SPI Configuration

Copyright © 2024 Texas Instruments Incorporated

- Multiple slave devices in series (daisy chain) connection limited only by the SPI write frame speed requirements.

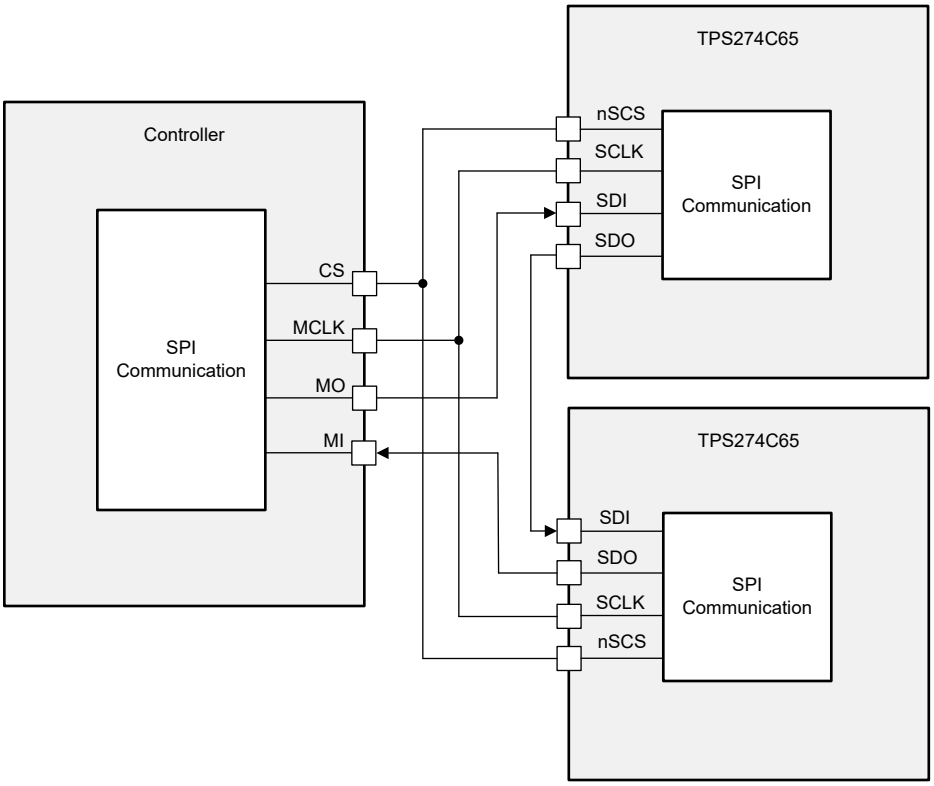

Figure 8-6. Daisy Chain Configuration

SPI mode controls the following functions.

- ON/OFF control of the switches.
- Disable the diagnostics to reduce the quiescent current consumption.
- Select the channel(s) and measurements for VOUT, IOUT and TEMP.
- Fault management (clearing faults and action/response on fault).
- Watchdog timer - the device will generate an error if the SW_STATE register has not been successfully written into within the watchdog timeout period. The customer can disable the watchdog feature using the WD_EN bit (default is off).
- The current limit protection threshold

Table 8-1. SPI IC Address Configuration

Resistor Value(kΩ)	ADDCFG Code
13.3	000
17.8	001
23.7	010
31.6	011
44.2	100
59	101
78.7	110
110	111

Note: Please use resistor with <1% tolerance.

Table 8-2. SPI Configuration

Pin Configuration	SPI Register Configuration		SCLK Cycle per Frame
DSPI	D24BIT	CRC_EN	
0	x	0	24 bits, no CRC
	x	1	32 bits, with CRC
1	0	0	16 bits, no CRC
	1	1	24 bits, with CRC
	1	0	24 bits, no CRC

SPI Sequence Frame Format

Note

FAULT STATUS TYPE bits in the SDO frame are equivalent to the FAULT_TYPE_STAT register (0h) listed in TPS274C65 Registers.

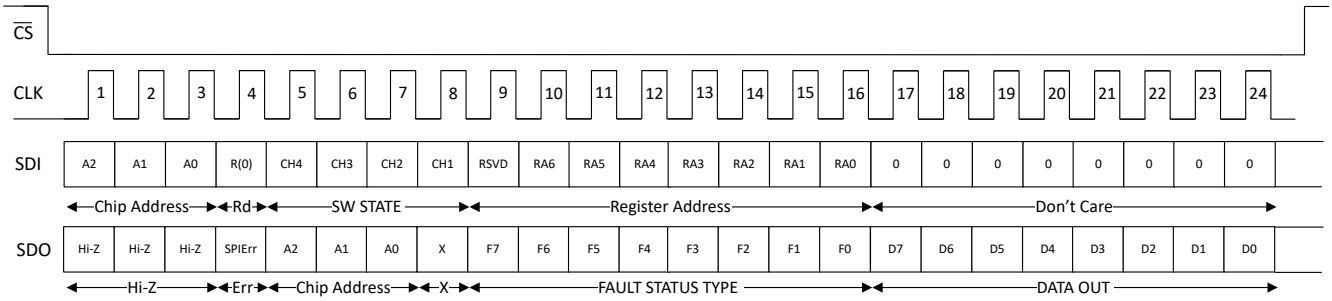

Figure 8-7. 24-bit Read, DSPI=0, D24BIT=x, CRC_EN=0

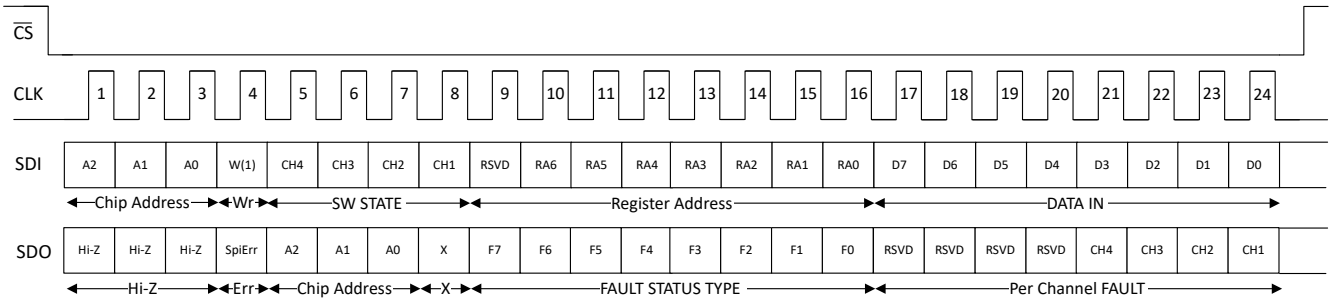

Figure 8-8. 24-bit Write, DSPI=0, D24BIT=x, CRC_EN=0

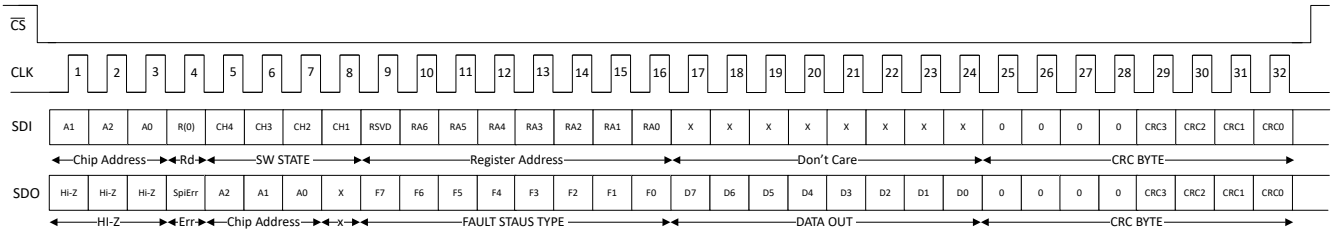

Figure 8-9. 32-bit Read, DSPI=0, D24BIT=x, CRC_EN=1

Copyright © 2024 Texas Instruments Incorporated

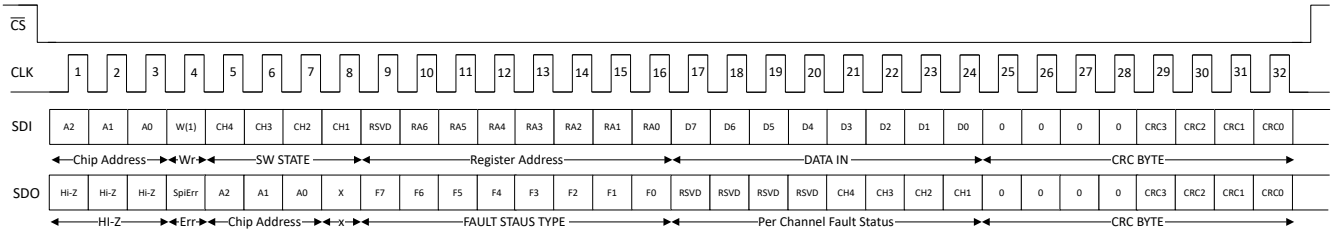

Figure 8-10. 32-bit Write, DSPI=0, D24BIT=x, CRC_EN=1

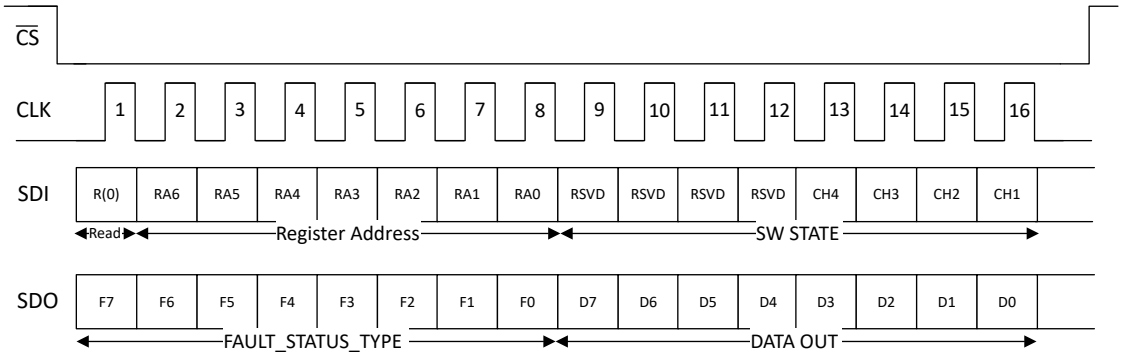

Figure 8-11. 16-bit Read, DSPI=1, D24BIT=0, CRC_EN=0

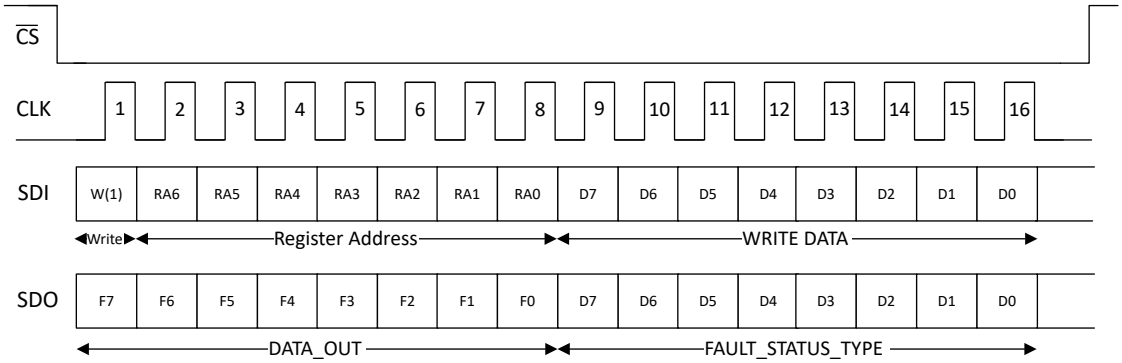

Figure 8-12. 16-bit Write, DSPI=1, D24BIT=0, CRC_EN=0

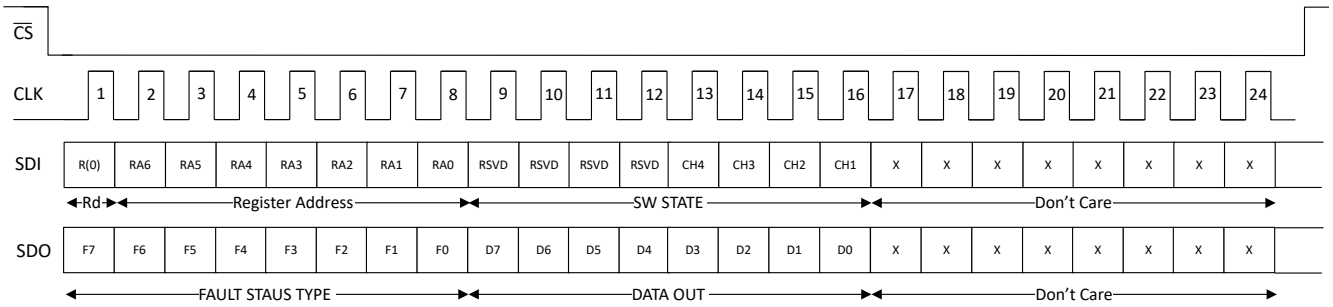

Figure 8-13. 24-bit Read, DSPI=1, D24BIT=1, CRC_EN=0

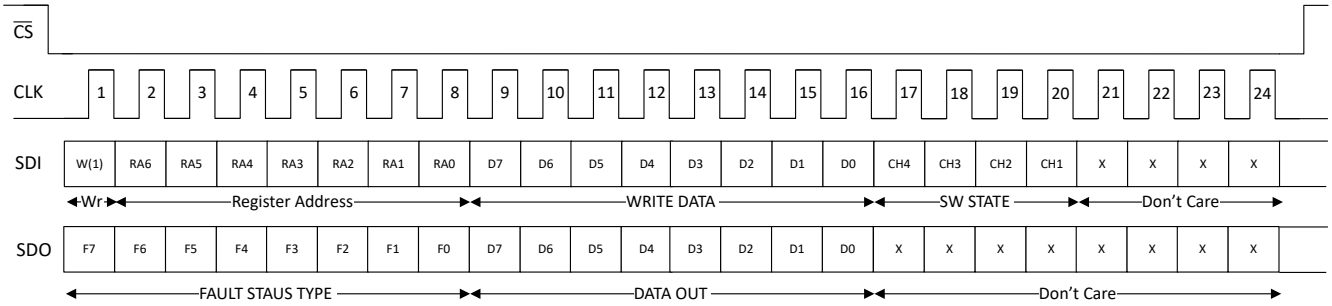

Figure 8-14. 24-bit Write, DSPI=1, D24BIT=1, CRC_EN=0

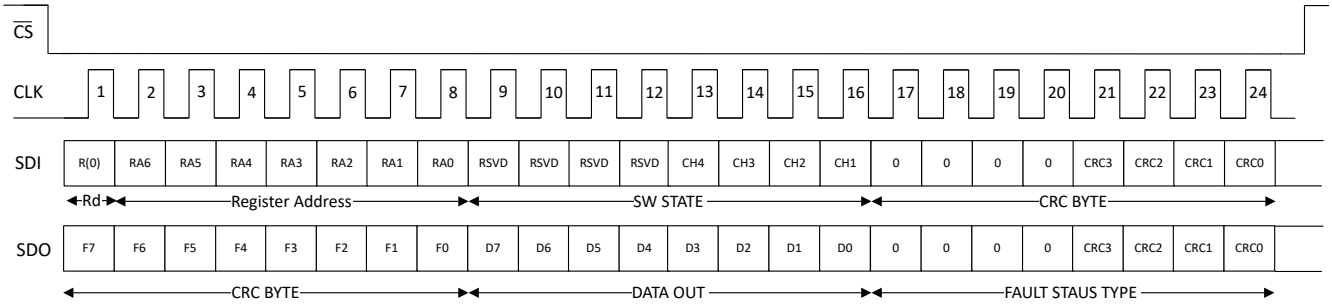

Figure 8-15. 24-bit Read, DSPI=1, D24BIT=1, CRC_EN=1

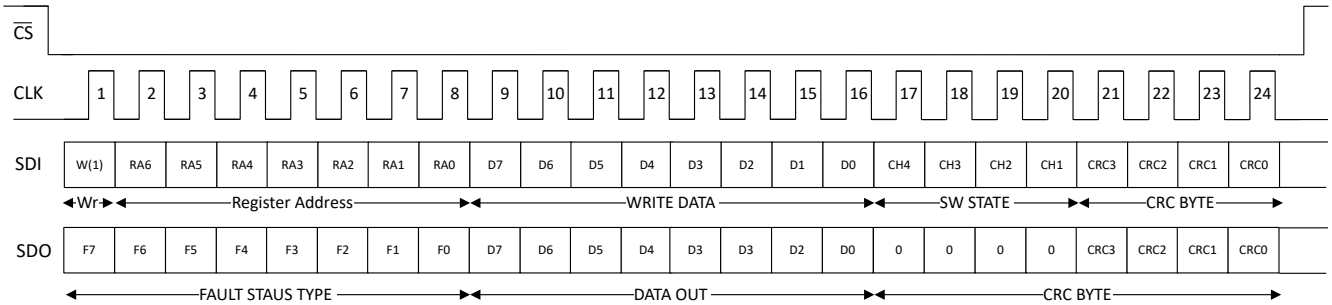

Figure 8-16. 24-bit Write, DSPI=1, D24BIT=1, CRC_EN=1

8.3.2.1 Diagnostic Bit Behavior

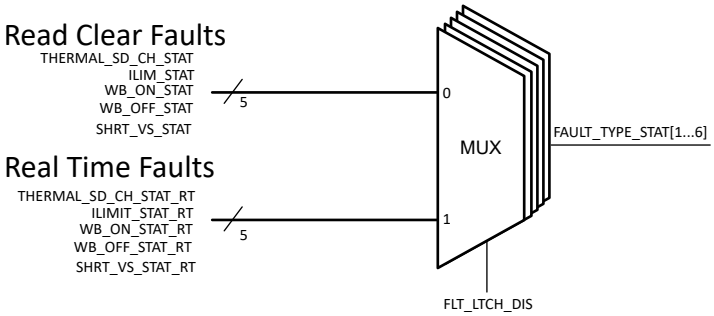

Figure 8-17. Fault Signaling Scheme

8.3.3 Programmable Current Limit

The TPS274C65xS integrates a dual stage adjustable current limit. For the most efficient and reliable output protection, the current limit can be set as close to the DC current level as possible. However often systems

Copyright © 2024 Texas Instruments Incorporated

require high inrush current handling as well (example incandescent lamp and capacitive loads). By integrating a dual stage current limit, the TPS274C65xS enables robust DC current limiting while still allowing flexible inrush handling.

A lower current limit lowers fault energy and current during a load failure event such as a short-circuit or a partial load failure. By lowering fault energy and current, the overall system improves through:

- Reduced size and cost in current carrying components such as PCB traces and module connectors
- Less disturbance at the power supply (V_S pin) during a short circuit event
- Less additional budget for the power supply to account for overload currents in one channel or more
- Improved protection of the downstream load

Table 8-3. Current Limit Setting Table for TPS274C65ASH

ILIM_REG_xx[3]	ILIM_REG_xx[2]	ILIM_REG_xx[1]	ILIM_REG_xx[0]	Typical ILIM Threshold(A)
0	0	0	0	0.29
0	0	0	1	0.38
0	0	1	0	0.48
0	0	1	1	0.57
0	1	0	0	0.67
0	1	0	1	0.76
0	1	1	0	0.86
0	1	1	1	0.96
1	0	0	0	1.15
1	0	0	1	1.33
1	0	1	0	1.52
1	0	1	1	1.71
1	1	0	0	1.9
1	1	0	1	2.07
1	1	1	0	2.26
1	1	1	1	2.45

Table 8-4. Current Limit Setting Table for TPS274C65AS, TPS274C65BS

ILIM_REG_xx[3]	ILIM_REG_xx[2]	ILIM_REG_xx[1]	ILIM_REG_xx[0]	Typical ILIM Threshold(A)
0	0	0	0	0.25
0	0	0	1	0.33
0	0	1	0	0.4
0	0	1	1	0.48
0	1	0	0	0.56
0	1	0	1	0.67
0	1	1	0	0.72
0	1	1	1	0.85
1	0	0	0	1
1	0	0	1	1.1

Copyright © 2024 Texas Instruments Incorporated

Table 8-4. Current Limit Setting Table for TPS274C65AS, TPS274C65BS (continued)

ILIM_REG_xx[3]	ILIM_REG_xx[2]	ILIM_REG_xx[1]	ILIM_REG_xx[0]	Typical ILIM Threshold(A)
1	0	1	0	1.25
1	0	1	1	1.5
1	1	0	0	1.6
1	1	0	1	1.75
1	1	1	0	1.9
1	1	1	1	2.2

Table 8-5. Inrush Current Period Setting Table

ILIM_REG_xx[7]	ILIM_REG_xx[6]	ILIM_REG_xx[5]	ILIM_REG_xx[4]	Inrush Period (ms)
0	0	0	0	0
0	0	0	1	2
0	0	1	0	4
0	0	1	1	6
0	1	0	0	8
0	1	0	1	10
0	1	1	0	12
0	1	1	1	16
1	0	0	0	20
1	0	0	1	24
1	0	1	0	28
1	0	1	1	32
1	1	0	0	40
1	1	0	1	48
1	1	1	0	56
1	1	1	1	64

Table 8-6. ILIM Configuration Table

ILIM_CONFIG	ILIM level during ILIMDELAY	FLT reporting during ILIMDELAY
0	As programmed with INRUSH_LIMIT[1:0] and ILIM_REG_xx[3:0]	Fault not reported
1	As programmed with ILIM_REG_xx[3:0]	Fault is reported

Copyright © 2024 Texas Instruments Incorporated

8.3.3.1 Inrush Current Handling

The current limit thresholds and the inrush current time duration can be set by SPI register writes to enable flexible inrush current control behavior. The following table shows the various options available.

Table 8-7. Inrush Current Limit Options

INRUSH_LIMIT[1]	INRUSH_LIMIT[0]	Current Limit During Inrush Duration	Notes
0	0	Current limit at the level set by register	The device will show constant current limit threshold in each channel at all times set by the register values
0	1	Current limit at 2x the level set by register	The current is set higher during the duration of the inrush delay to support high inrush current loads like incandescent lamps - See figure (Case B) showing ex current limit behavior enabling into a short circuit
1	0	Current limit at 0.5x the level set by register	Feature to limit the current and power dissipation during the charging large power supply capacitor loads.
1	1	Current limit fixed at 2.2 A threshold	

An example current limit timing behavior is shown Figure 8-18.

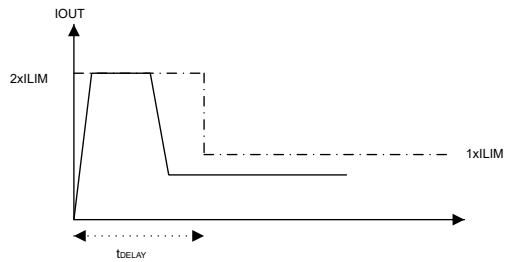

Figure 8-18. Inrush current limit set to 2x ILIM with a delay set by the ILIMDELAY register setting. Initially current load is higher than the twice the limit and then decreases to the 1x limit

The above waveform shows the current limiting behavior on enabling the outputs during the initial inrush period. The initial inrush current period when the current limit is higher enables two different system advantages when driving loads

- Enables higher load current to be supported for a period of time in the order of milliseconds to drive high inrush current loads like incandescent bulb loads.
- Enables fast capacitive load charging. In some situations, it is ideal to charge capacitive loads at a higher current than the DC current to ensure quick supply bring up. This architecture allows a module to quickly charge a capacitive load using the initial higher inrush current limit and then use a lower current limit to reliably protect the module under overload or short circuit conditions.

While in current limiting mode, at any level, the device will have a high power dissipation. If the FET temperature exceeds the over-temperature shutdown threshold, the device will turn off just the channel that is overloaded. After cooling down, the device will either latch off or re-try, depending on the latch configuration. If the device is turning off prematurely on start-up, it is recommended to improve the PCB thermal layout, lower the current limit to lower power dissipation, or decrease the inrush current (capacitive loading).

Copyright © 2024 Texas Instruments Incorporated

8.3.4 DO_EN Feature

DO_EN pin allows user to turn OFF all the channels regardless of the SW_STATE register status. If the DO_EN is kept low, all the output channels cannot be turned ON even if the SW_STATE register shows channels are enabled.

When the SW_STATE commands are sent during DO_EN low period, the register values will be stored in the register. Once the DO_EN goes high, then the output states will follow the register values stored in the SW_STATE.

8.3.5 Protection Mechanisms

The TPS274C65xS protects the system against load fault events like short circuits, inductive load kickback, overload events and over-temperature events. This section describes the details for protecting against each of these fault cases.

There are protection features which, if triggered, will cause the switch to automatically disable:

- Thermal Shutdown

The fault indication is reset and the switch will turn back on when all of the below conditions are met:

- t_{RETRY} has expired
- All faults are cleared (thermal shutdown and current limit)

Please note that if device hits thermal shutdown during the inrush period, the device will retry with the higher inrush current.

8.3.5.1 Overcurrent Protection

When I_{OUT} reaches the current limit threshold, I_{CL}, the device will register an overcurrent fault and begin regulating the current at the set limit. When any switch is in the FAULT state it will be indicated on the $\overline{FLT}$ pin. This protects the system against overload cases where the load attempts to draw more than it's max rated current, so the TPS274C65 can recognize and limit current or shut off during these cases. In the case of a slow overload with the device channel enabled for a while, the current limit levels are as shown in Figure 8-19.

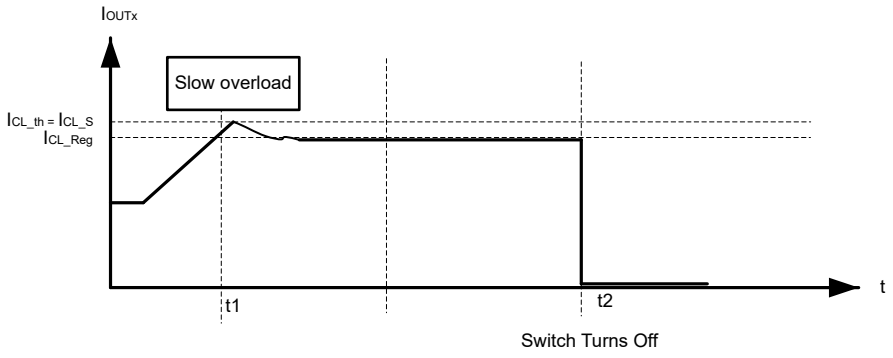

Figure 8-19. Overload Response

Copyright © 2024 Texas Instruments Incorporated

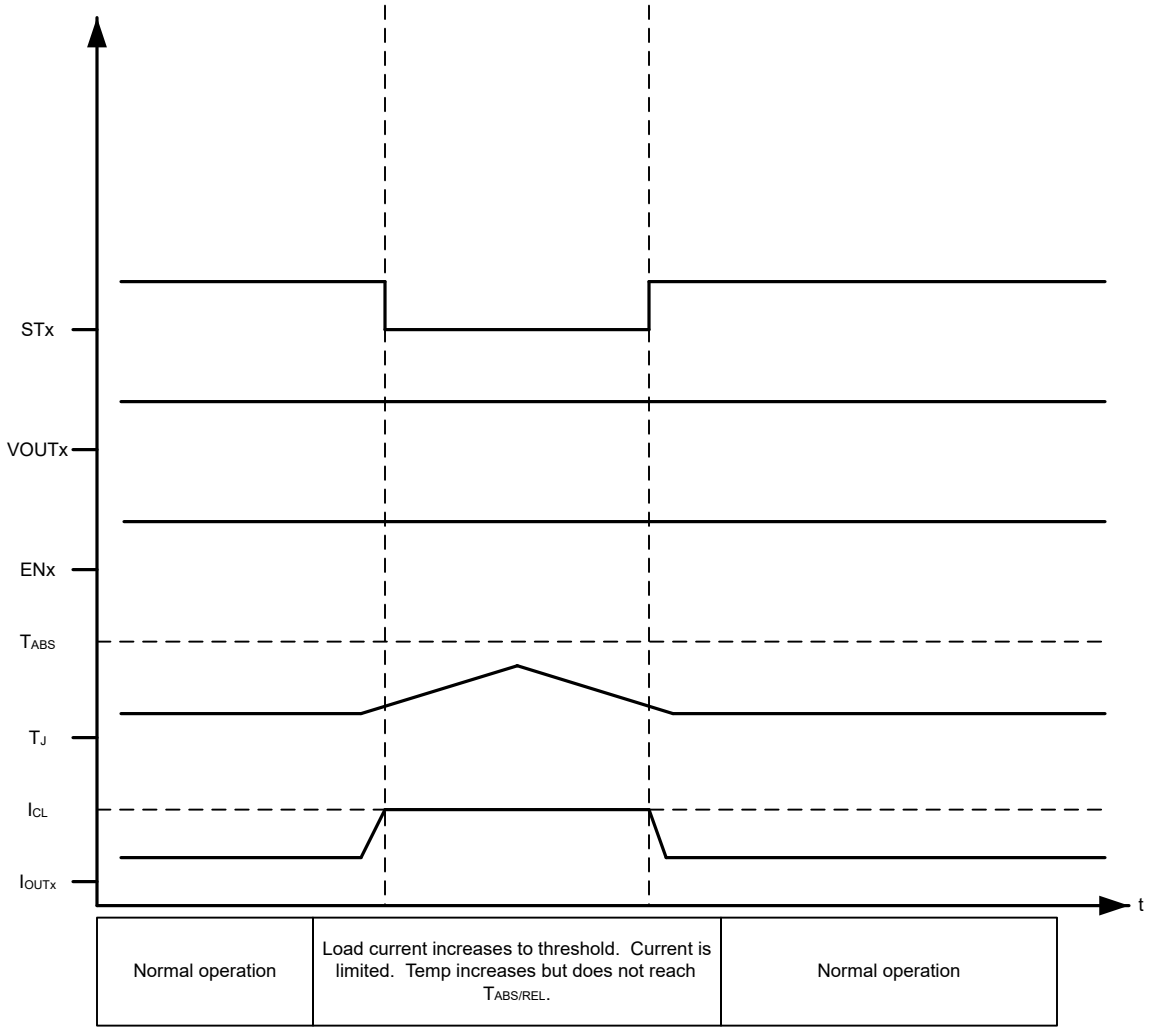

Figure 8-20. Overcurrent Behavior

For more details on the current limiting functionality, please see Programmable Current Limit.

8.3.5.2 Short Circuit Protection

The TPS274C65xS provides output short-circuit protection to ensure that the device will prevent current flow in the event of a low impedance path to GND, removing the risk of damage or significant supply droop. The TPS274C65xS is guaranteed to protect against short-circuit events regardless of the state of the ILIM pins and with up to 36 V supply at 125°C.

Figure 8-21 shows the behavior of the TPS274C65xS when the device is enabled into a short-circuit.

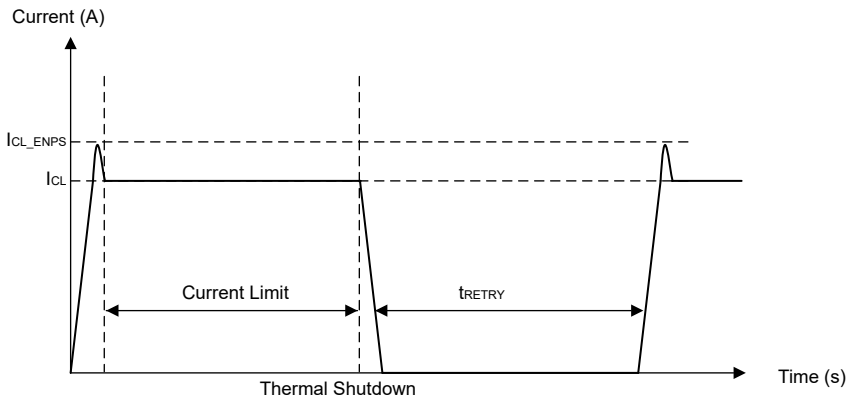

Figure 8-21. Enable into Short-Circuit Behavior

Due to the low impedance path, the output current will rapidly increase until it hits the current limit threshold. Due to series inductance and deglitch, the measured maximum current may temporarily exceed the I_{CL} value defined as I_{CL_ENPS}, however it will settle to the current limit.

In this state high power is dissipated in the FET, so eventually the internal thermal protection temperature for the FET is reached and the device safely shuts down. If the device is not configured in latch mode, the device will wait t_{RETRY} amount of time and turn the channel back on.

Figure 8-22 shows the behavior of the TPS274C65xS when a short-circuit occurs when the device is in the on-state and already outputting current. When the internal pass FET is fully enabled, the current clamping settling time is slower so to ensure overshoot is limited, the device implements a fast trip level at a level I_{OVCR}. When this fast trip threshold is hit, the device immediately shuts off for a short period of time before quickly re-enabling and clamping the current to I_{CL_Reg} level after a brief transient overshoot to the I_{CL_ENPS} level. The device will then keep the current clamped at the regulation current limit until the thermal shutdown temperature is hit and the device will safely shut-off.

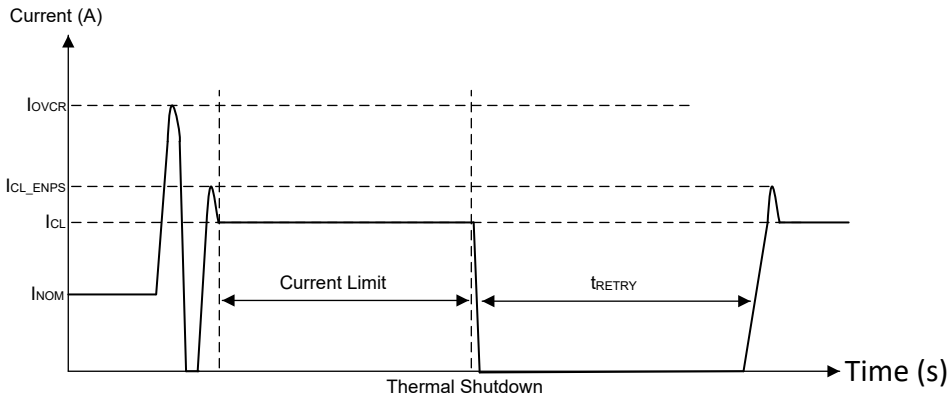

Figure 8-22. On-State Short-Circuit Behavior

Soft Short- Circuit Behavior illustrated in Soft Short-Circuit Behavior shows the behavior of the TPS274C65xS when there is a small change in impedance that sends the load current above the I_{CL} threshold. The current rises to I_{CL_LINPK} since the FET is still in the linear mode. Then the current limit kicks in and the current drops to the I_{CL} value.

Copyright © 2024 Texas Instruments Incorporated

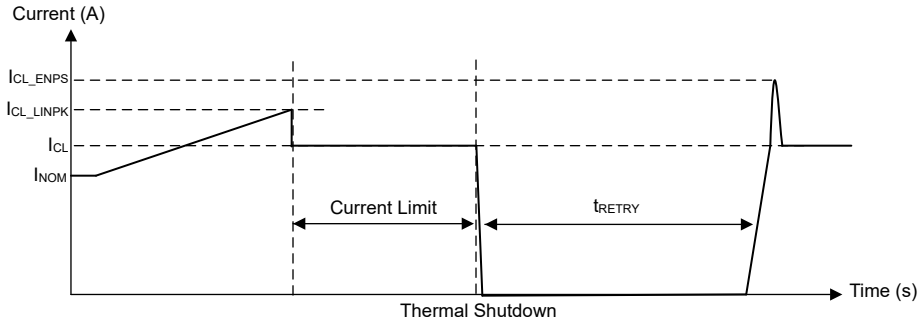

Figure 8-23. Soft Short-Circuit Behavior

In all of these cases, the internal thermal shutdown is safe to hit repetitively. There is no device risk or lifetime reliability concerns from repeatedly hitting this thermal shutdown level.

8.3.5.2.1 V_S During Short-to-Ground

When V_{OUT} is shorted to ground, the module power supply (V_S) can see a transient decrease. This is caused by the sudden increase in current flowing through the cable inductance. For ideal system behavior, it is recommended that the module supply capacitance be increased by adding bulk capacitance on the power supply node.

8.3.5.3 Inductive-Load Switching-Off Clamp

When an inductive load is switching off, the output voltage is pulled down to negative, due to the inductance characteristics. The power FET may break down if the voltage is not clamped during the current-decay period. To protect the power FET in this situation, internally clamp the drain-to-source voltage, namely $V_{DS,clamp}$, the clamp diode between the drain and gate.

$$V_{DS,Clamp} = V_S - V_{OUT} \tag{1}$$

During the current-decay period (T_{DECAY}), the power FET is turned on for inductance-energy dissipation. Both the energy of the power supply (E_S) and the load (E_{LOAD}) are dissipated on the high-side power switch itself, which is called E_{HSD}. If resistance is in series with inductance, some of the load energy is dissipated in the resistance.

$$E_{HSD} = E_S + E_{LOAD} = E_S + E_L - E_R \tag{2}$$

From the high-side power switch's view, E_{HSD} equals the integration value during the current-decay period.

$$E_{HSD} = \int_0^{T_{DECAY}} V_{DS,clamp} \times I_{OUT}(t)\,dt \tag{3}$$

$$T_{DECAY} = \frac{L}{R} \times \ln\left(\frac{R \times I_{OUT(MAX)} + |V_{OUT}|}{|V_{OUT}|}\right) \tag{4}$$

$$E_{HSD} = L \times \frac{V_{BAT} + |V_{OUT}|}{R^2} \times \left[R \times I_{OUT(MAX)} - |V_{OUT}| \ln\left(\frac{R \times I_{OUT(MAX)} + |V_{OUT}|}{|V_{OUT}|}\right)\right] \tag{5}$$

When R approximately equals 0, E_{HSD} can be given simply as:

$$E_{HSD} = \frac{1}{2} \times L \times I^2_{OUT(MAX)} \frac{V_{BAT} + |V_{OUT}|}{R^2} \tag{6}$$

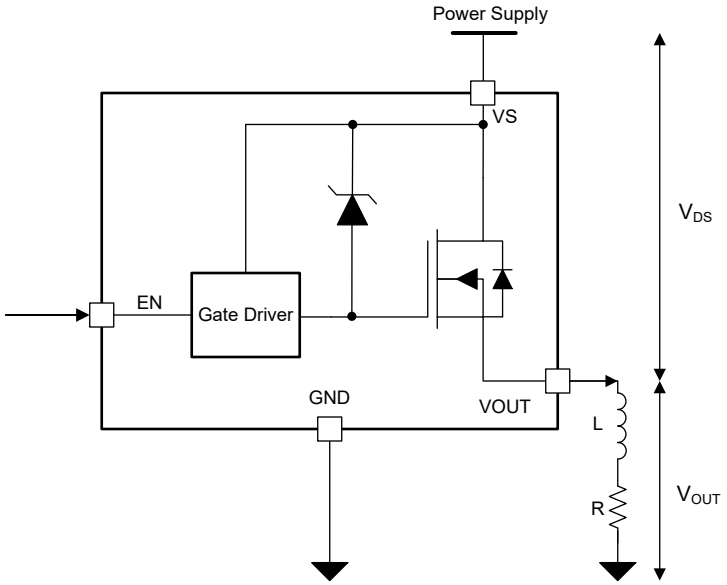

Figure 8-24. Driving Inductive Load

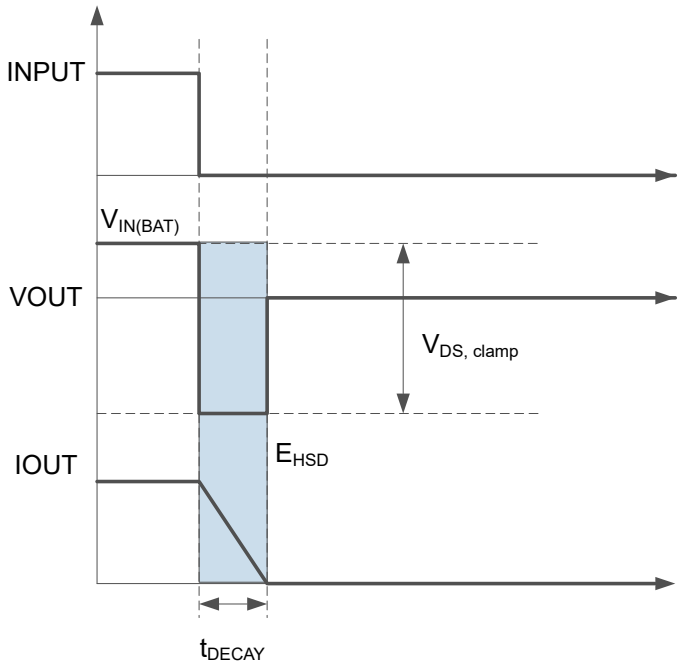

Figure 8-25. Inductive-Load Switching-Off Diagram

As discussed previously, when switching off, supply energy and load energy are dissipated on the high-side power switch, which leads to the large thermal variation. For each high-side power switch, the upper limit of the maximum safe power dissipation depends on the device intrinsic capacity, ambient temperature, and board dissipation condition.

8.3.5.4 Inductive Load Demagnetization

When switching off an inductive load, the inductor can impose a negative voltage on the output of the switch. The TPS274C65 includes voltage clamps between VS and VOUT to limit the voltage across the FETs and demagnetize load inductance if there is any. The negative voltage applied at the OUT pin drives the discharge

Copyright © 2024 Texas Instruments Incorporated

of inductor current. Figure 8-26 shows the device discharging a load of 100mH paralleled with 48Ω, resulting 500mA at the turn-off.

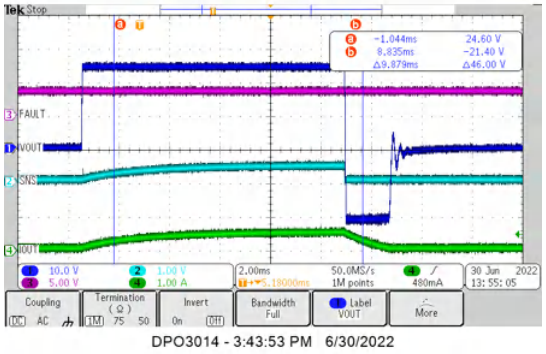

Figure 8-26. TPS274C65 Inductive Discharge (100mH + 48Ω)

The maximum acceptable load inductance is a function of the energy dissipated in the device and therefore the load current and the inductive load. The maximum energy and the load inductance the device can withstand for one pulse inductive dissipation at 125°C is shown in Figure 8-27. The device can withstand 40% of this energy for one million inductive repetitive pulses with a 2Hz repetitive pulse. If the application parameters exceed this device limit, use a protection device like a freewheeling diode to dissipate the energy stored in the inductor.

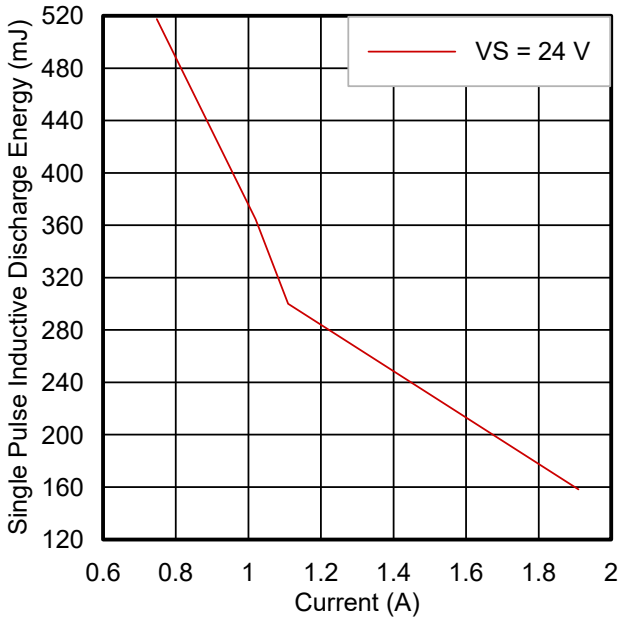

Figure 8-27. Maximum Energy Dissipation (E_{AS}) Allowed $T_{J,\ START}$ = 125°C – Single Pulse, One Channel

8.3.5.5 Thermal Shutdown

The TPS274C65 includes a temperature sensor on the power FET and also within the controller portion of the device. There are two cases that the device will register a thermal shutdown fault:

- $T_{J,FET} > T_{ABS}$
- $(T_{J,FET} – T_{J,controller}) > T_{REL}$

The first condition enables the device to register a long-term overtemperature event (caused by ambient temperature or too high DC current flow), while the second condition allows the device to quickly register transient heating that is causes in events like short-circuits.

After the fault is detected, the switch will turn off. If $T_{J,FET}$ passes T_{ABS}, the fault is cleared when the switch temperature decreases by the hysteresis value, T_{HYS}. If instead the T_{REL} threshold is exceeded, the fault is cleared after T_{RETRY} passes.

Each channel will shut down independently in case of a thermal event, as each has it's own temperature sensor and fault reporting.

8.3.5.6 Undervoltage protection on VS

The device monitors the supply voltage V_S to prevent unpredicted behaviors in the event that the supply voltage is too low. When the supply voltage falls down to V_{S_UVPF}, the swtiches will shut off When the supply rises up to V_{S_UVPR}, the device turns back on.

The VS undervoltage fault will be indicated through the register and $\overline{FLT}$pin unless masked.

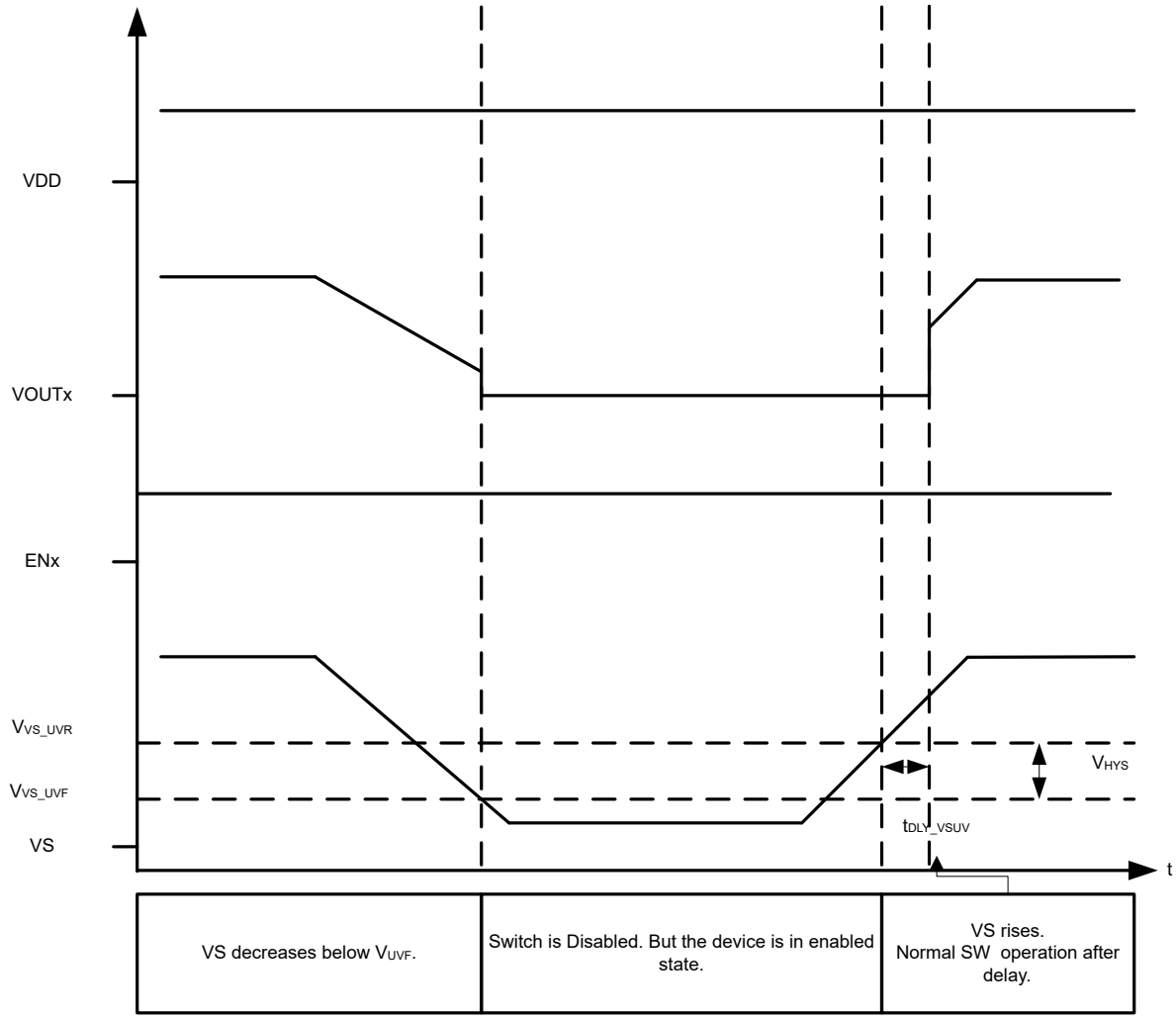

Figure 8-28. VS UVP

Copyright © 2024 Texas Instruments Incorporated

8.3.5.7 Undervoltage Lockout on Low Voltage Supply (VDD_UVLO)

The device monitors the input supply voltage V_{VDD} to prevent unpredictable behavior in the event that the supply voltage is too low. When the supply voltage falls down to V_{VDD_UVLOF}, the device channel outputs are disabled and $\overline{READY}$ pin is pulled high. The device will resume normal operation when VDD rises above the VDD_{UVLOR} threashold. The device will indicate through the POR bit if a reset of the digital has occured.

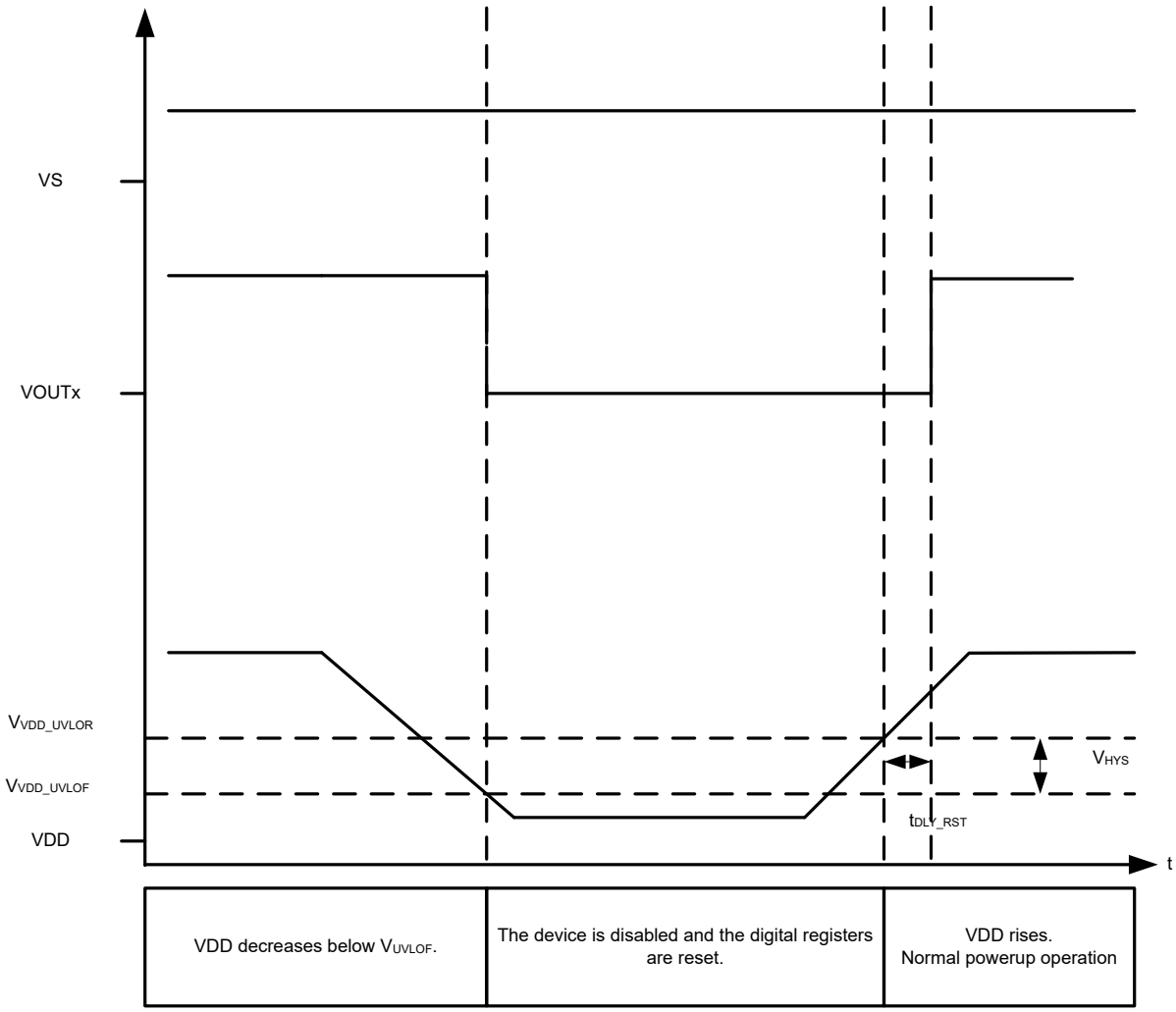

Figure 8-29. VDD UVLO

8.3.5.8 Power-Up and Power-Down Behavior

Device is in OFF or POR state when the device is not powered. $\overline{FAULT}$, $\overline{READY}$ and VOUTx will be in high-Z state.

Once the $V_S > V_{S_UVPR}$ and $V_{DD} > V_{DD,UVLOR}$, the device starts to read in the configurations and $\overline{READY}$ will be pulled low when the device is ready for the SPI communication.

In case the VDD power supply is enabled the first and the VDD voltage exceeds $V_{DD,UVLOR}$ before the VS supply is up and VS voltage exceeds V_{S_UVPR}, the outputs remain disabled.

8.3.5.9 Reverse Current Blocking

Reverse current occurs when $V_{VS}<V_{OUT}$. In this case, current will flow from V_{OUTx} to VS. Reverse current can be caused by miswiring at the output, or a capacitive or inductive load can cause inverse current. For example, if

there is a significant amount of load capacitance and the V_S node has a transient droop, V_{OUTx} may be greater than V_S. The $V_S$droop may be caused by inrush current from a different load. Similarly load/supply faults and inductive loads can cause supply to be pushed up as well. Another application is to provide protection when output connection to supply (miswiring) occurs when the input power supply is not available or connected. The device monitors V_S and V_{OUT} to provide true reverse current blocking when a reverse condition or input power failure condition is detected.

To prevent reverse current flow, TPS274C65AS integrates a NMOS gate driver that drives an external blocking FET. The blocking FET is enabled as soon as the device is enabled and $V_{VS} > V_{S_UVP}$. When a reverse current condition is detected such as $V_{OUT} - V_{VS} > V_{RCB_R}$, the blocking FET gets disabled to prevent unwanted reverse currents and signaled through RVRS_BLK_FLT and FLT. Once off, TPS274C65AS has the hysteresis implemented to keep the RCB FET off as long as $V_{OUT} - V_{VS} < V_{RCB_F}$. After $t_{RCB_comp_reset}$ timer expired, the RCB FET is enabled to check if the reverse current condition has cleared, and the comparator threshold is reset from V_{RCB_F} to V_{RCB_R}. If $V_{OUT} - V_{VS} > V_{RCB_R}$condition is met after the RCB FET is re-enabled, TPS274C65AS again turns off the RCB FET. During reverse current event, current sensing is not available, and I_{SNS} and ADC register go to 0 mA.

In case the RCB FET needs to be kept off, the per channel RCB bit RCB_CHx can be turned low to keep the RCB FET off. However, the main FET needs to be off as well to avoid excessive heat through the RCB FET that can lead to the RCB FET damage. If there's no external RCB FET connected, RCB_DIS bit needs to be turned high , and the RCB pins need to be left floating. Each channel has RCB_CHx bit to configure the RCB FET to be always OFF or with normal RCB function as described above. Table 8-8 shows some example use cases for the RCB feature.

Table 8-8. Common Applications for RCB

Example Application	RCB_DIS	Per Channel RCB	Comment
Digital Output Module but reverse current blocking function is not desired	1	RCB_CHx = X	RCB pin left floating and not connected to the RCB FET.
Digital Output Module and reverse current blocking function is needed	0	RCB_CHx = 1	RCB pin connected to the RCB FET gate with normal RCB function.
Digital Input Ouput module with RCB FET used to conduct current in DI configuration	0	RCB_CHx = 0	RCB pin connected to the RCB FET gate with RCB FET always OFF. No RCB detection.
Digital Input Ouput module with the channel in Digital Output configuration	0	RCB_CHx = 1	RCB pin connected to the FET gate with normal RCB function.

Copyright © 2024 Texas Instruments Incorporated

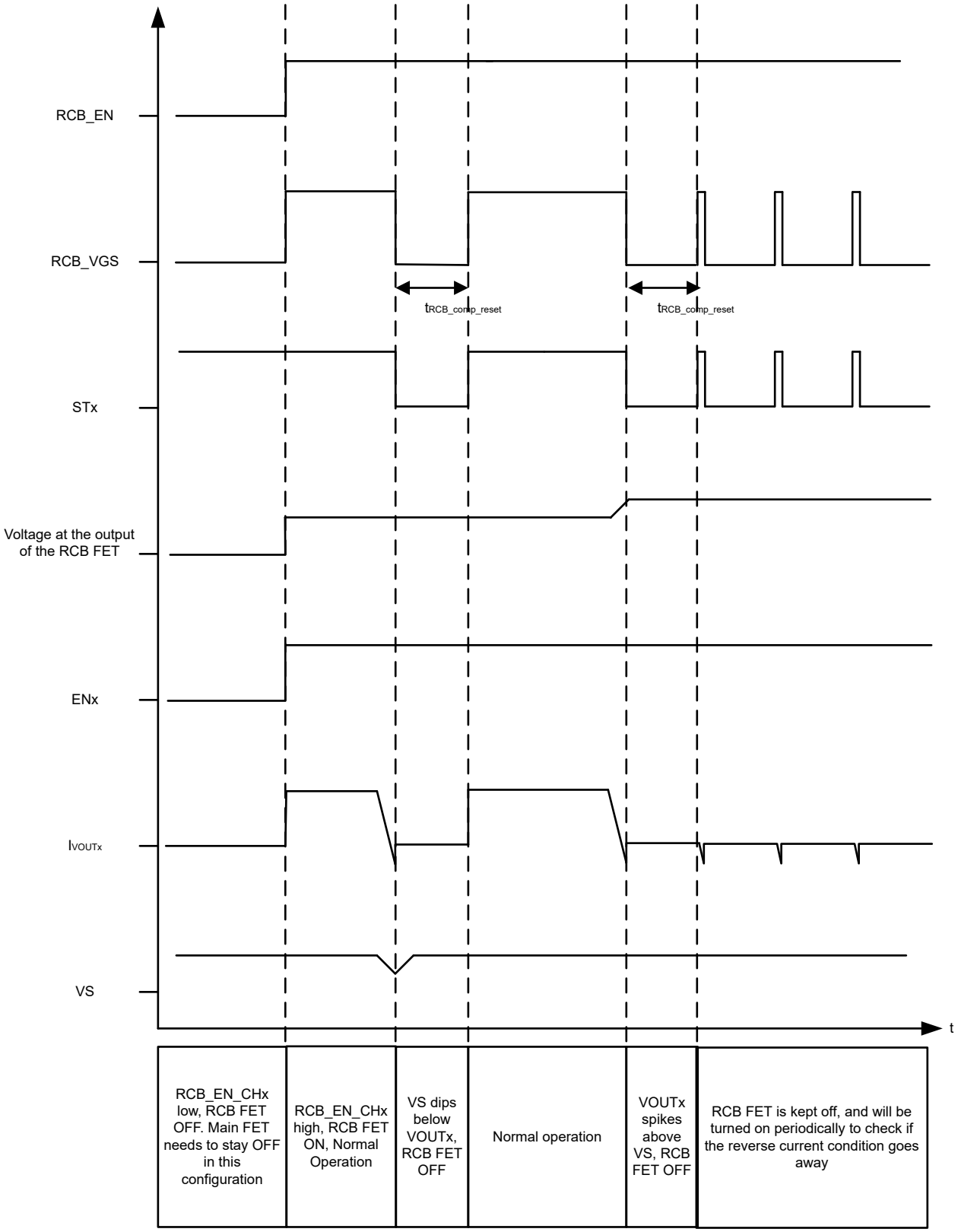

Figure 8-30. Reverse Current Blocking

8.3.6 Diagnostic Mechanisms

As systems demand more intelligence, it is becoming increasingly important to have robust diagnostics measuring the conditions of output power. The TPS274C65 integrates many diagnostic features that enable modules to provide predictive maintenance and intelligence power monitoring to the system.

8.3.6.1 Current Sense

The SNS output may be used to sense the load current through any channel. The SNS pin will output a current that is proportional to the load current through either channel. This current will be sourced into an external resistor to create a voltage that is proportional to the load current. This voltage may be measured by an ADC or comparator and used to implement intelligent current monitoring for a system. To ensure accurate sensing measurement, R_{SNS} should be connected to the same ground potential as the µC ADC.

Equation 3 shows the transfer function for calculating the load current from the SNS pin current.

$$I_{SNSI} = I_{OUT} / K_{SNS} \quad (7)$$

dI_{SNST}/dT and K_{SNS} are defined in the *Specifications* section.

8.3.6.1.1 R_{SNS} Value

The following factors should be considered when selecting the R_{SNS} value:

- Current sense ratio (K_{SNS})
- Largest and smallest diagnosable load current required for application operation
- Full-scale voltage of the ADC
- Resolution of the ADC

8.3.6.1.1.1 SNS Output Filter

To achieve the most accurate current sense value, it is recommended to filter the SNS output. There are two methods of filtering:

- Low-Pass RC filter between the SNS pin and the ADC input. This filter is illustrated in Figure 9-1 with typical values for the resistor and capacitor. The designer should select a C_{SNS} capacitor value based on system requirements. A larger value will provide improved filtering but a smaller value will allow for faster transient response.
- The ADC and microcontroller can also be used for filtering. It is recommended that the ADC collects several measurements of the SNS output. The median value of this data set should be considered as the most accurate result. By performing this median calculation, the microcontroller can filter out any noise or outlier data.

8.3.6.2 Fault Indication

The following faults will be register a fault that will show on the $\overline{FLT}$ pin (unless masked):.

- FET Thermal Shutdown
- Active Current Regulation
- Thermal Shutdown caused by Current Limitation
- Open load detection in on-state or off-state
- V_{OUT} Short to Battery

Condition	VS	VDD	ENx	OUTx	LATCH(AUTO_RETRY_DIS)	$\overline{FLT}$	FAULT Recovery
VS Undervoltage	$<V_{S_UVP}$	$>V_{DD,UVLO}$	X	X	X	H	-
Normal	$>V_{S_UVP}$	$>V_{DD,UVLO}$	L	L	X	H	-
	$>V_{S_UVP}$	$>V_{DD,UVLO}$	H	H	X	H	-

Copyright © 2024 Texas Instruments Incorporated

Condition	VS	VDD	ENx	OUTx	LATCH(AUTO_RETRY_DIS)	$\overline{FLT}$	FAULT Recovery
Short to Supply, Off-state open load	$>V_{S_UVP}$	$>V_{DD,UVLO}$	L	H	X	L	-
Short to GND, Overload, TSD	$>V_{S_UVP}$	$>V_{DD,UVLO}$	H	L	L	L	Auto-retry
	$>V_{S_UVP}$	$>V_{DD,UVLO}$	H	L	H	L	Latch-off. Fault recovers when ENx toggles.

8.3.6.2.1 Current Limit Behavior

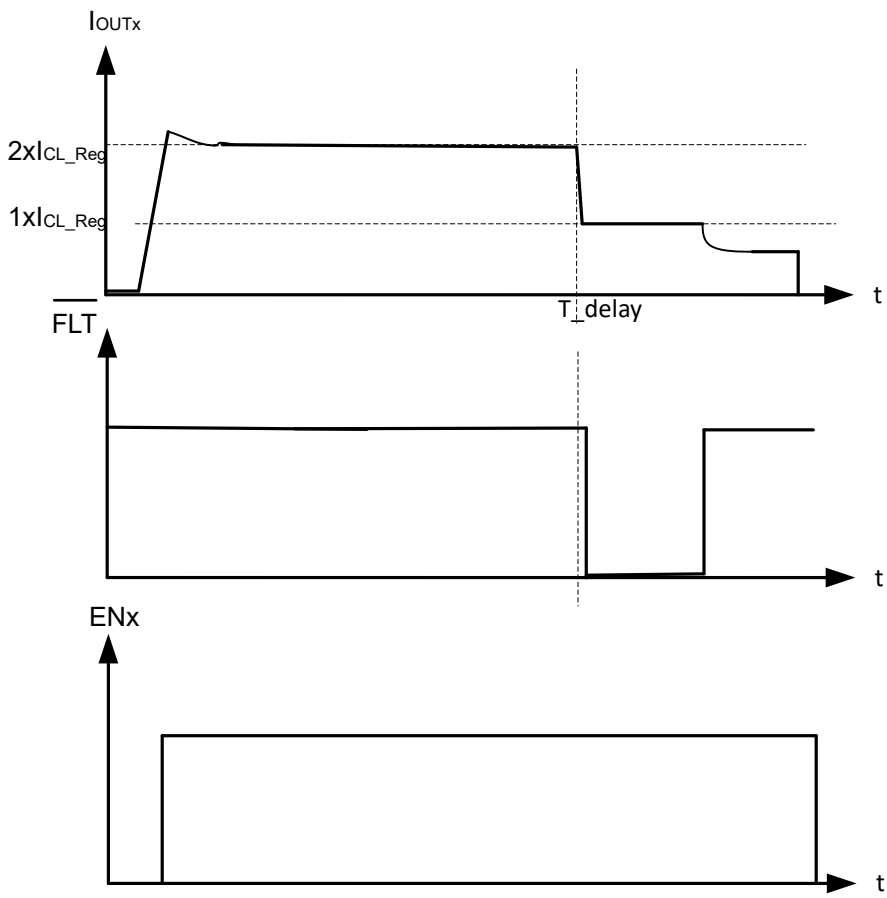

Figure 8-31. FLT Pin Behavior With an Overcurrent Event on Channel Enable

Figure 8-32 shows the device fault and retry behavior when there is a slow creep into an over-current event. As shown, the switch clamps the current until it hits thermal shutdown, and then the device will remain latched off until the AUTO_RETRY_DIS bit is low.

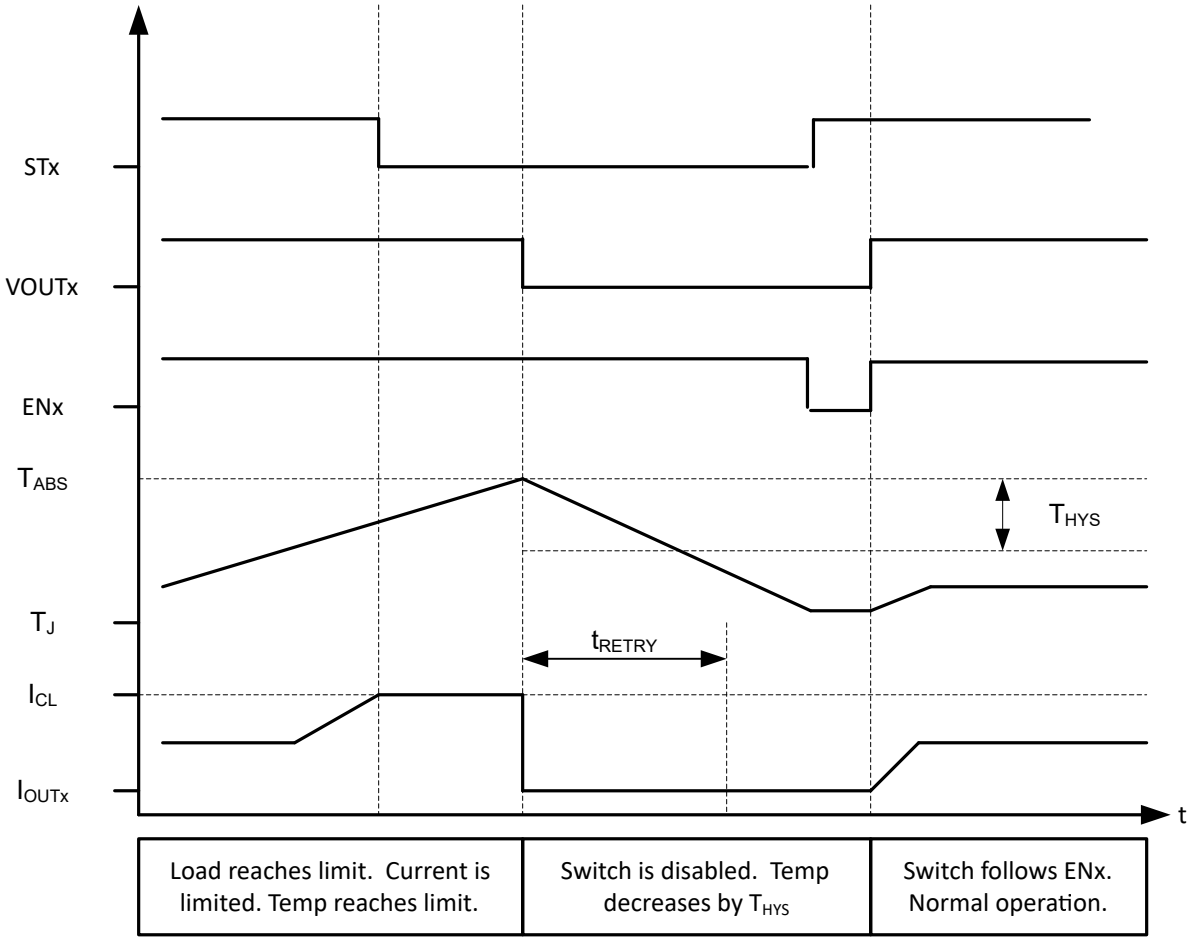

Figure 8-32. Current Limit – Latched Behavior

Copyright © 2024 Texas Instruments Incorporated

Figure 8-33 shows the behavior with AUTO_RETRY_DIS = 1 (Latched behavior); hence, the switch will retry after the fault is cleared and t_{RETRY} has expired.

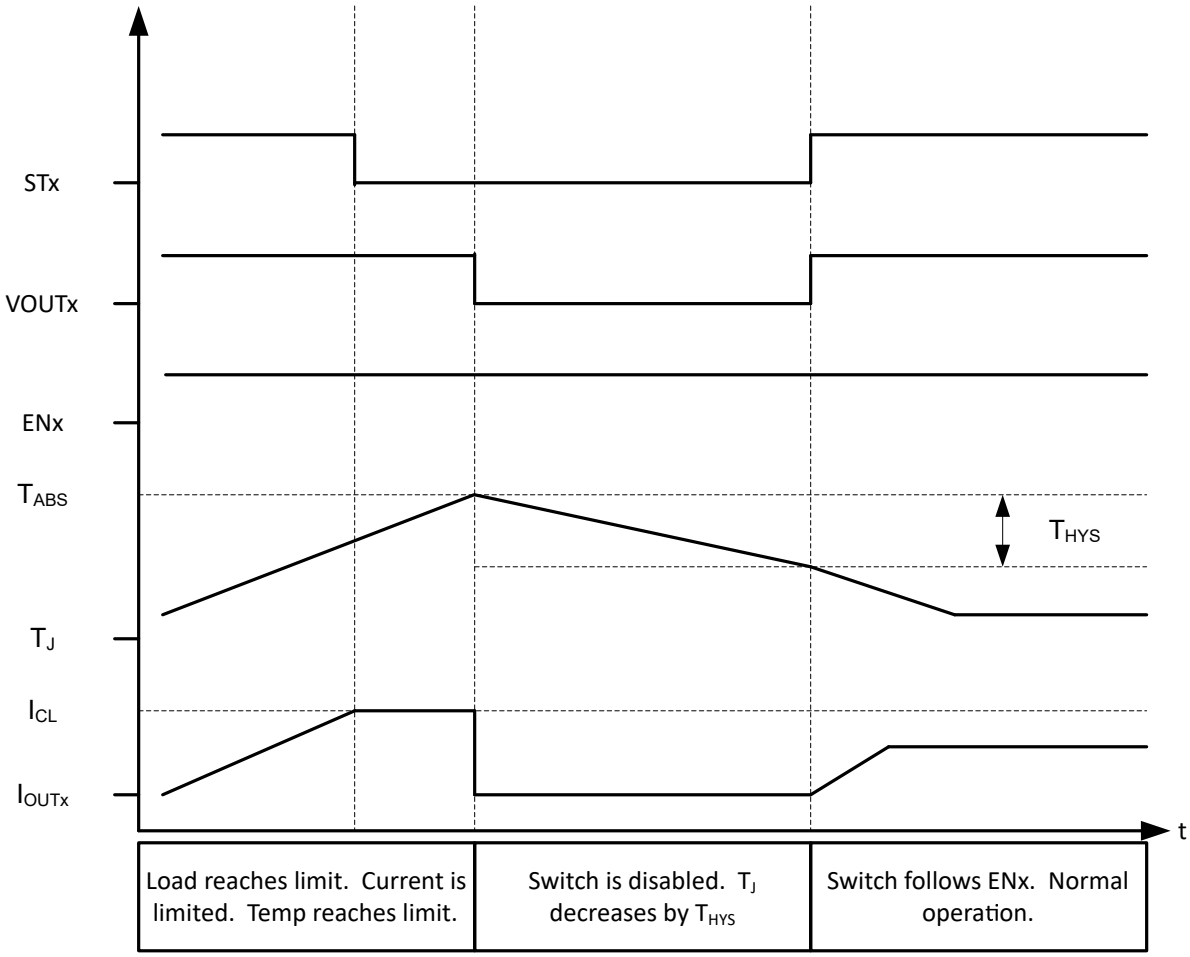

Figure 8-33. Current Limit – AUTO_RETRY_DIS = 0

When the switch retries after a shutdown event, the fault indication will remain until V_{OUTx} has risen to V_{BB} – 1.8 V. Once V_{OUTx} has risen, the $\overline{FLT}$ output is reset and current sensing is available. If there is a short-to-ground and V_{OUT} is not able to rise, the SNS fault indication will remain indefinitely. Figure 8-34 illustrates auto-retry behavior and provides a zoomed-in view of the fault indication during retry.

Note

Figure 8-34 assumes that t_{RETRY} has expired by the time that T_J reaches the hysteresis threshold.

AUTO_RETRY_DIS = 0

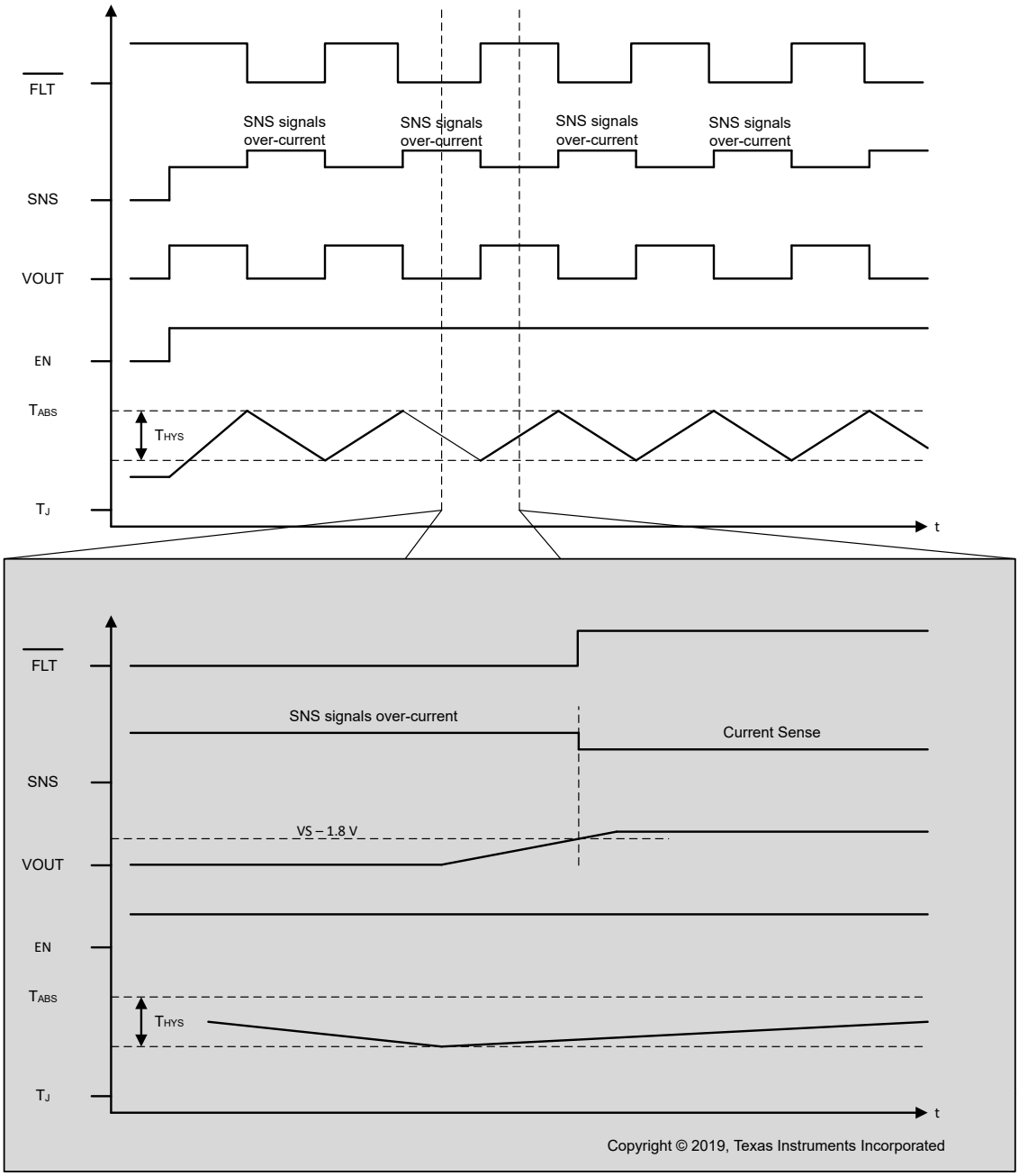

Copyright © 2024 Texas Instruments Incorporated

8.3.6.3 Short-to-Battery and Open-Load Detection

The TPS274C65 is capable of detecting short-to-battery and open-load events regardless of whether the switch is turned on or off, however the two conditions use different methods to signify fault. This feature enables systems to recognize mis-wiring or wire-break events.

8.3.6.4 On-State Wire-Break Detection

When the switch is enabled, TPS274C65 supports on-state open load detecttion as low as 0.32mA. In order to achieve this accuracy, TPS274C65 uses a higher resistance path that is enabled for a short period of time(T_{WB_ON1}). If the WB_ON is kept high, the higher resistance path will be turned on again after 100ms retry time. The wire-break will also be retried whenever the WB_ON signal is toggled. Please refer to Figure 8-35 for the wire-break detection timing diagram. This functionality is enabled when EN_WB_ON and diagnostics are enabled, during this time open-load threshold will be detected and signaled through WB_ON_FLT bit if wire break is detected.

Table 8-9. Open-Load ON-State Detection Threshold

WB_ON_THD[2]	WB_ON_THD[1]	WB_ON_THD[0]	Typical Current Threshold (mA)
0	0	0	0.32
0	0	1	0.64
0	1	0	0.96
0	1	1	1.28
1	0	0	1.6
1	0	1	1.92
1	1	0	2.24
1	1	1	2.56

Copyright © 2024 Texas Instruments Incorporated

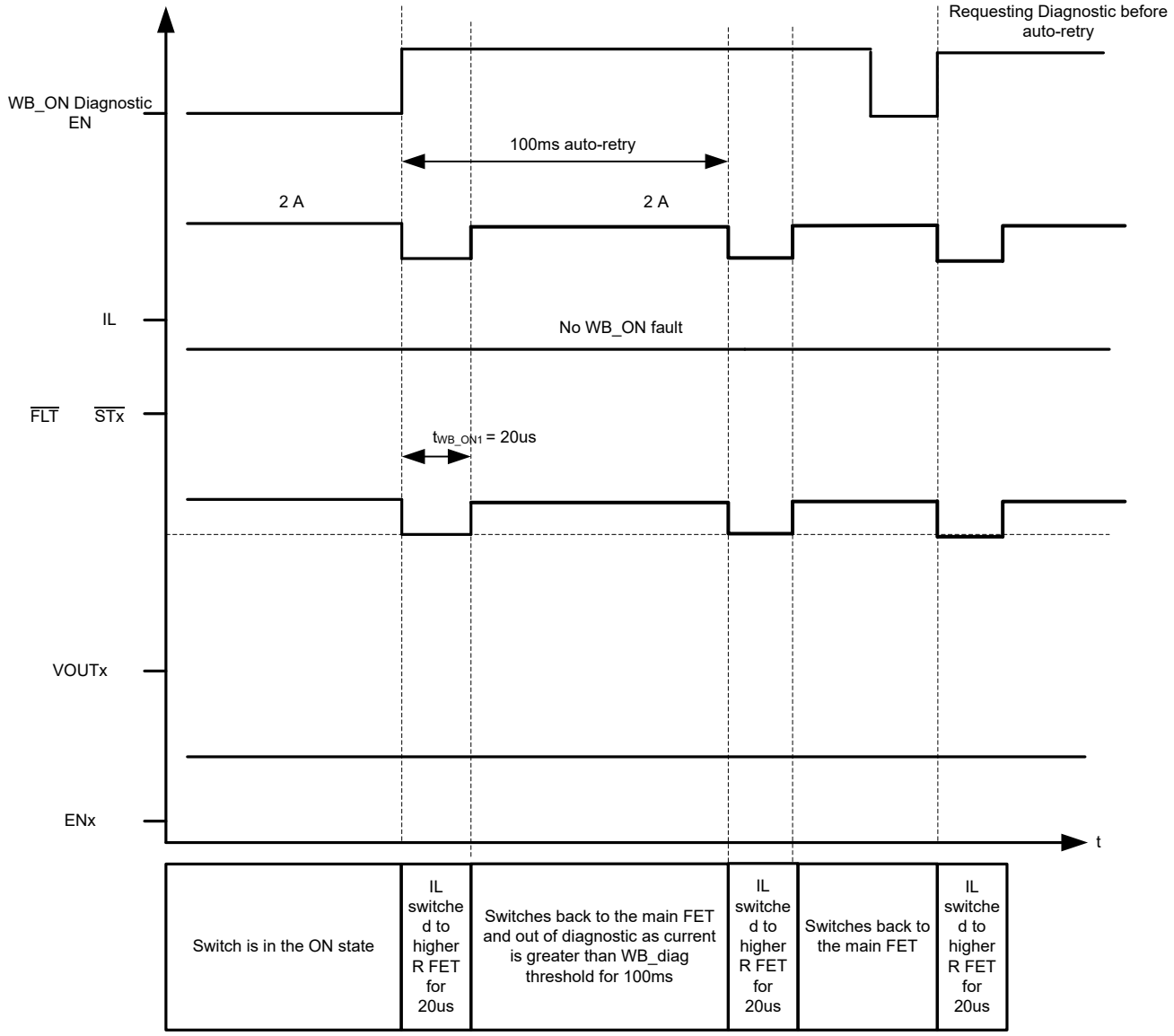

Figure 8-35. ON-State Wire-Break Detection

8.3.6.5 Off State Wire-Break Detection

While the switch disabled and WB_OFF_CHx_EN high, an internal comparator watches the condition of V_{OUT}. The TPS274C65 includes a current source connected to V_{OUT} controlled by the DIA_EN signal. So, if the load is disconnected (open load condition) or there is a short to battery the V_{OUT} voltage will be pulled towards V_S. In either of these events, the internal comparator will measure V_{OUT} as higher than the open load threshold ($V_{OL,off}$) and a fault is indicated on the $\overline{FLT}$ pin and on the SNS pin. No external component are required in most cases, however if there is external pull-down resistor to GND on V_{OUT}, an additional external pull-up resistor might be necessary to bias V_{OUT} appropriately.

The comparator and detection circuitry is only enabled when EN = LOW. Open load will be indicated on the FLT pin even if WB_OFF_CHx_EN is set low, but will need an external pull-up resistor (and potentially a switch). Open load fault signaling on the SNS is enabled only if WB_OFF_CHx_EN is set HI.

While the switch is disabled, the fault indication mechanisms will continuously represent the present status. For example, if V_{OUT} decreases from greater than V_{OL} to less than V_{OL}, the fault indication is reset. Additionally, the fault indication is reset upon WB_OFF_CHx_EN = 0 or the rising edge of EN.

Copyright © 2024 Texas Instruments Incorporated

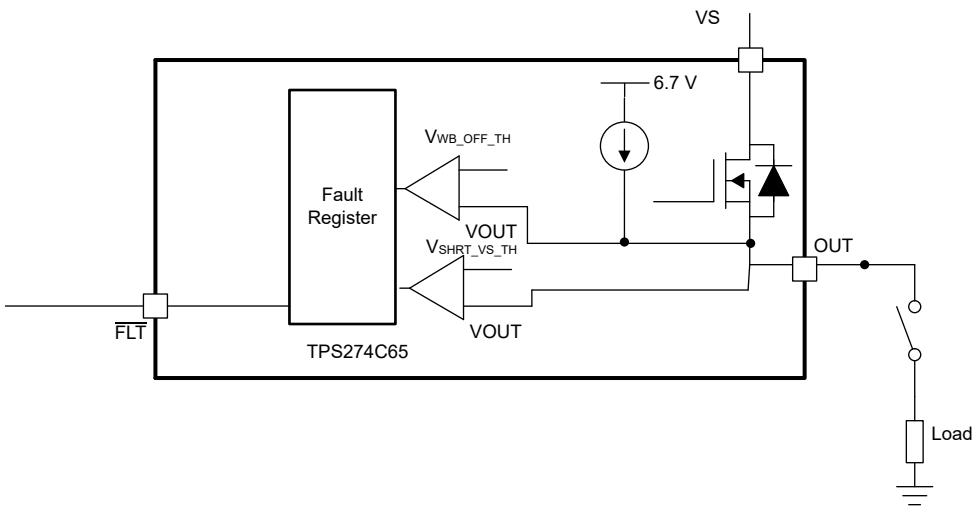

Figure 8-36. Open Load Detection Circuit

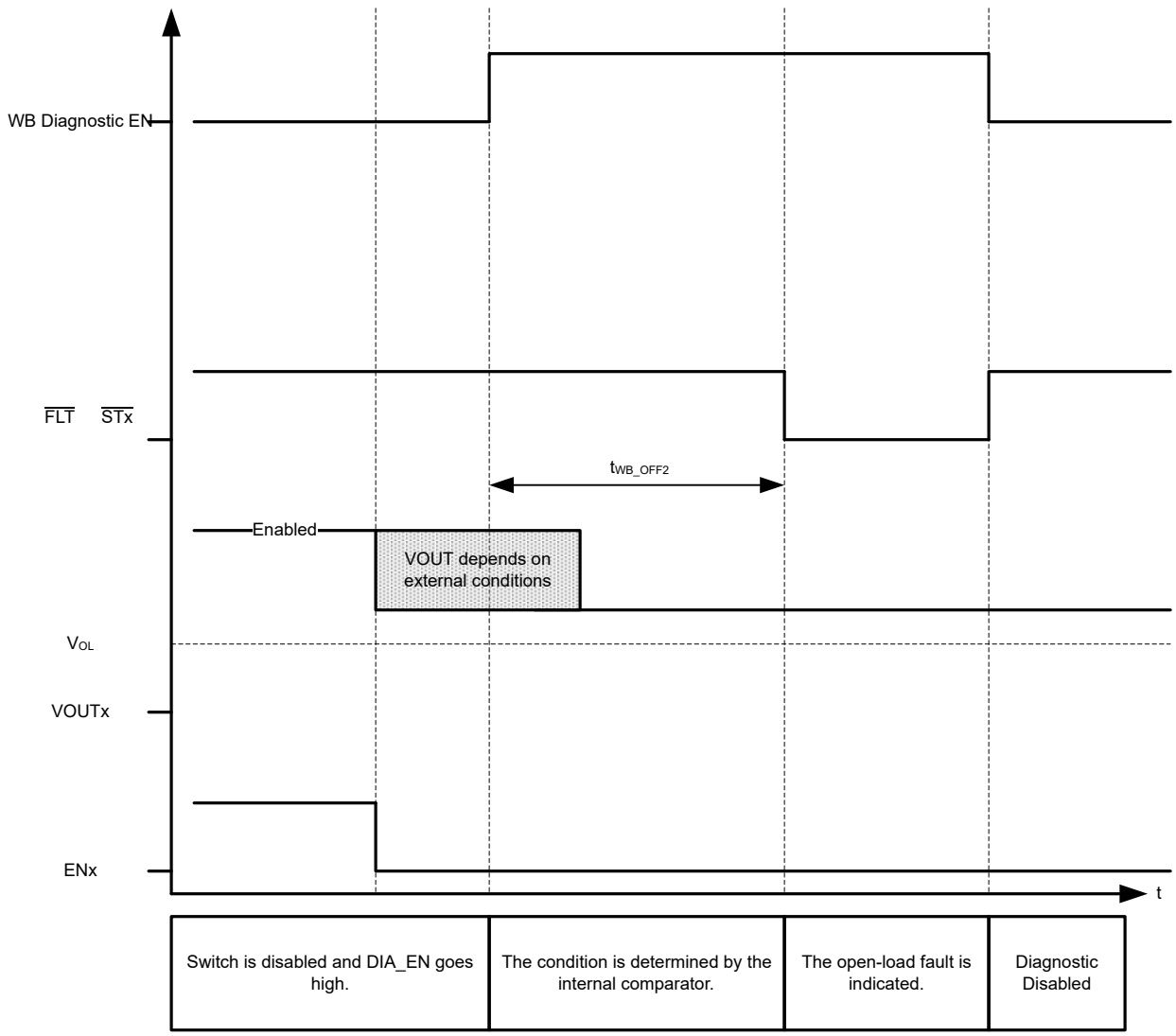

Figure 8-37. Off-State Open Load Detection Timing

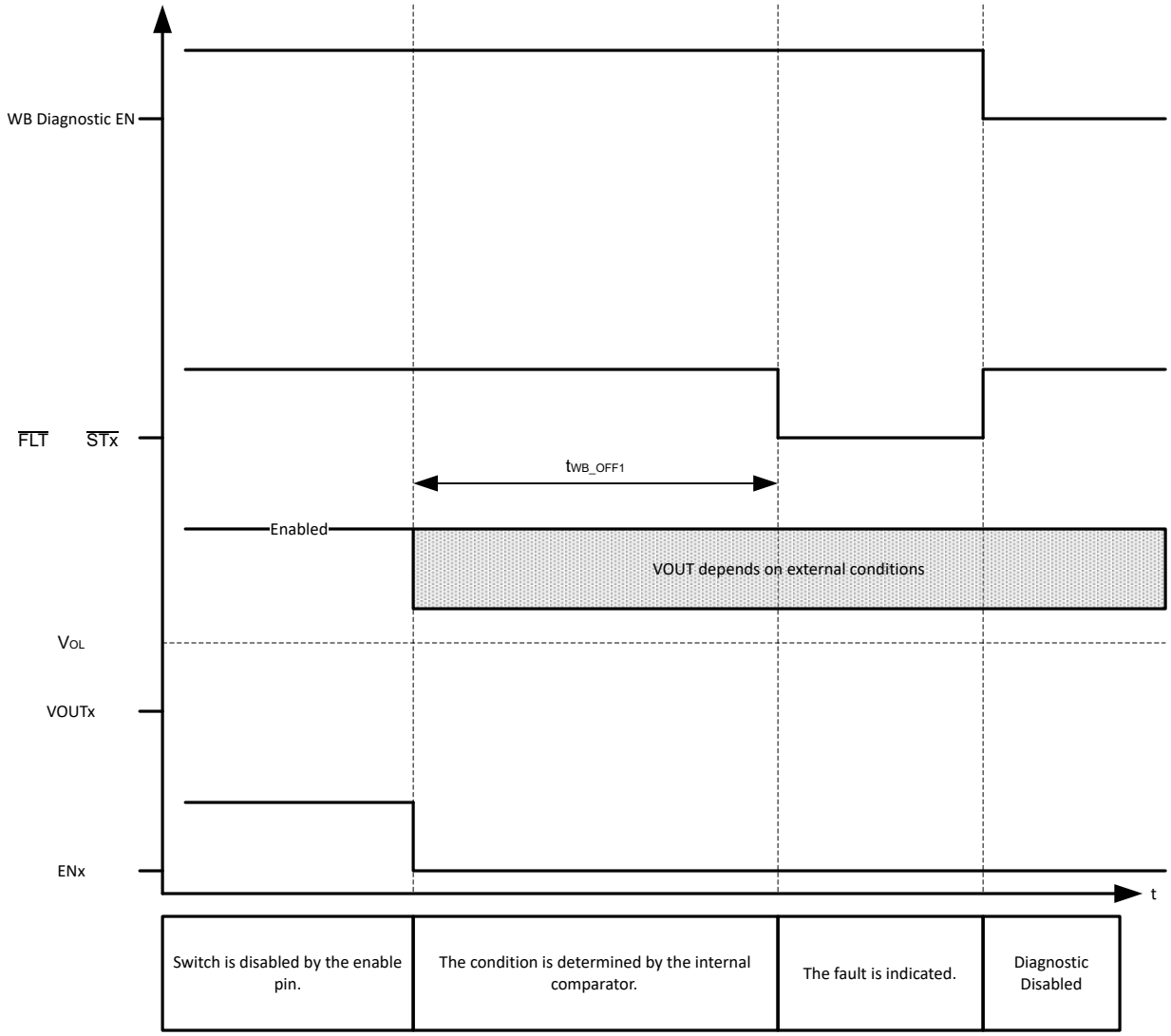

Figure 8-38. Off-State Open Load Detection Timing

8.3.6.6 ADC

The device includes an internal ADC that can convert the current sense, temperature sense, input and output voltages. The ADC reference voltage is fixed internally as shown in the electrical characteristics table.

The TPS274C65AS device has a successive approximation 10-bit ADC which can convert multiple channels serially. The ADC can be used to convert the following (but each or all of these can be disabled using SPI register configuration.

1. Sensed load current. The sense resistor converting the sense current to voltage should be sized such that the max load current (including the 20% over the nominal load value) produces a voltage value at the SNS pin (V_ISNS) that falls roughly at 80% of the ADC range. In this case, if ISNS is at the upper end of the ADC range, the device ADC output indicates that there is an over-load condition, and if ISNS is in the lower end of the ADC range, they know that there is an under-load condition. However, given the very low current values that need to be diagnosed, additional scaling of the V_ISNS voltage or the sensed current may be needed at the very low current limit. Note that the current output occurs only when the switch is enabled ON. The V_ISNS voltage would be sampled by the MUX switch only when the switch is fully ON (switch enable digital

Copyright © 2024 Texas Instruments Incorporated

signal gated with the ISNS_DELAY signal from) allowing the SNS current to settle. The four-sample average would be done only after the MUX switch is ON. The ADC ISNS reports FF as the output value.

$$ADC_{current} \text{ in decimal} = round[(2^{number\ of\ ADC\ bits}-1)*I_{load}*R_{SNS}/(K_{SNS}*V_{ADCREF})] \quad (8)$$

2. VS/VOUT voltage signals applied to the general purpose ADC pins. Note that the VOUT voltage need only be sensed as a fraction of the VS voltage.

$$ADC_{voltage} \text{ in decimal} = round[(2^{number\ of\ ADC\ bits}-1)*V_{S/OUT}/30] \quad (9)$$

where $V_{S/OUT}$ can be either V_S or V_{OUT}

3. Temperature sensed in each FET.

$$ADC_{temp} \text{ in decimal} = round[(2^{number\ of\ ADC\ bits}-1)*(0.83-T_{IC}/450)] \quad (10)$$

where T_{IC} is in ℃

The ADC's reference voltage pin is ADREFHI which is generated internally thus making the max voltage convertible to the ADCREFHI. Internally the ADC's ground reference is connected to the IC GND pin, so externally should be connected to the same pin to minimize the PCB ground shift errors.

The ADC scheduling is round robin with the following order:

1. ISNS
2. TSNS
3. VOUT_SNS
4. VSNS.

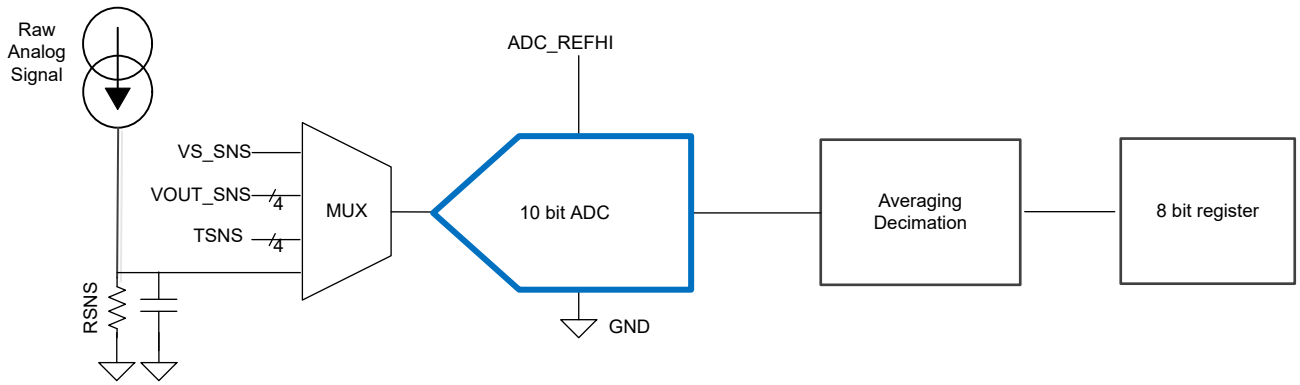

Figure 8-39. ADC Block Diagram

8.3.7 LED Driver

TPS274C65 integrates an LED driver designed to drive 8 Status LEDs using only 4 outputs(LEDOUT1-LEDOUT4). This design provides the flexibility to ensure *any combination of LEDs can be turned on at any given time* and the user can configure the outputs through SPI using the TPS274C65 Registers. This LED driver is designed to control each output with independent clock signals with ON phases offset from each other. This ensures maximum flexibility for the user assigning use cases when configuring LED driver.

An example application is to provide ON/OFF channel status and fault indication per channel. In this example, the user could assign channel specific functionality for D1-D4 such as channel on or off and tie D5-D8 as fault indication LEDs. However, the user has full discretion on how they want to leverage these outputs.

RS and RF resistors determine the LED current through each LED and should be chosen according to the LED's current/light density specifications. Current will flow from VDD pins to the LEDs, and the average current through each LED will be VDD/RS(or RF)/4.

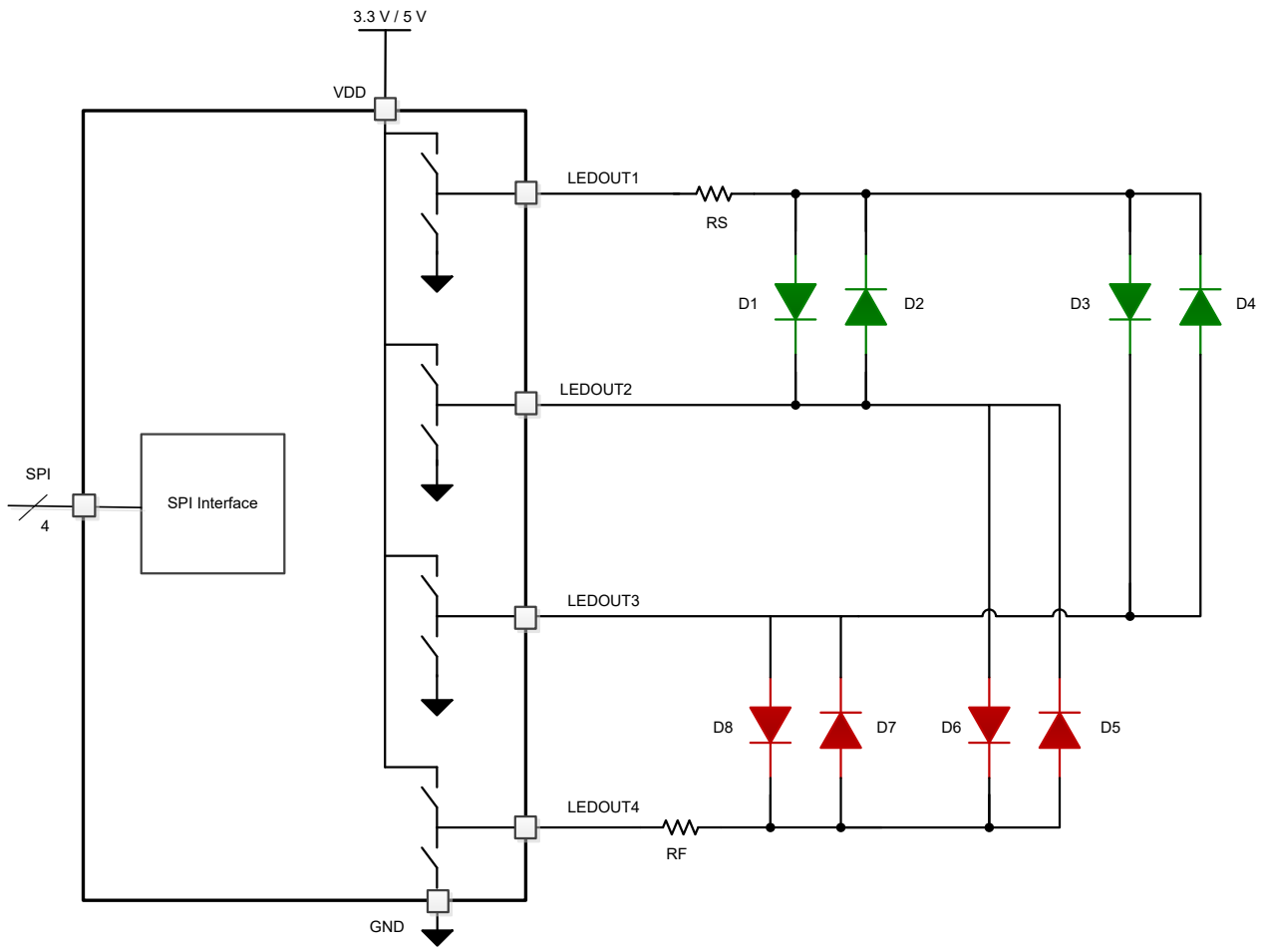

Figure 8-40. LED Driver

8.4 Device Functional Modes

During typical operation, the TPS274C65 can operate in a number of states that are described below.

8.4.1 OFF/POR

Off state occurs when the device is not powered. $\overline{\text{FAULT}}$, $\overline{\text{READY}}$ and $\overline{\text{VOUTx}}$ will be in high-Z state.

8.4.2 INIT

Once the $V_S > V_{S_UVPR}$ and $V_{DD} > V_{DD,UVLOR}$, the device starts to read in the configurations and $\overline{\text{READY}}$ will be high in this state.

8.4.3 Active

Once $\overline{\text{READY}}$ is low from the INIT state, the device enters active state, where the switch states are constantly written in through SPI.

8.5 TPS274C65BS Available Registers List

The registers listed in TPS274C65 Registers section show all available registers in the AS version. Some registers are not available in the BS version. Available Registers in TPS274C65BS Version shows the registers' availability in the BS version.

Copyright © 2024 Texas Instruments Incorporated

Table 8-10. Available Registers in TPS274C65BS Version

ADDRESS	REG_NAME	FUNCTIONAL IN BS VERSION	ADDRESS	REG_NAME	FUNCTIONAL IN BS VERSION
0x00	FAULT_TYPE_STAT	Y	**0x18**	ADC_RESULT_CH2_V	N
0x01	FAULT_CH_STAT	Y	**0x19**	ADC_RESULT_CH3_V	N
0x02	FAULT_GOBAL_TYPE	Y	**0x1A**	ADC_RESULT_CH4_V	N
0x03	SHRT_VS_CH_STAT	Y	**0x1B**	ADC_RESULT_VS	N
0x04	WB_OFF_CH_STAT	Y	**0x1C**	ADC_RESULT_VS_LSB	N
0x05	WB_ON_CH_STAT	Y	**0x1D**	SW_STATE	Y
0x06	ILIMIT_CH_STAT	Y	**0x1E**	LED_OUT_ON	N
0x07	THERMAL_SD_CH_STAT	Y	**0x1F**	LED_ERR_ON	N
0x08	THERMAL_WRN_CH_STAT	Y	**0x20**	SW_FS_STATE	Y
0x09	RVRS_BLK_CH_STAT	N	**0x21**	DEV_CONFIG1	Y
0x0A	RESERVED	N	**0x22**	DEV_CONFIG2	Y
0x0B	ADC_RESULT_CH1_I	N	**0x23**	DEV_CONFIG3	See Registers with Partial BIts Available in BS
0x0C	ADC_RESULT_CH1_I_LSB	N	**0x24**	DEV_CONFIG4	Y
0x0D	ADC_RESULT_CH2_I	N	**0x25**	DEV_CONFIG5	See Registers with Partial BIts Available in BS
0x0E	ADC_RESULT_CH2_I_LSB	N	**0x26**	DEV_CONFIG6	N
0x0F	ADC_RESULT_CH3_I	N	**0x27**	FAULT_MASK	See Registers with Partial BIts Available in BS
0x10	ADC_RESULT_CH3_I_LSB	N	**0x28**	EN_WB_OFF_CH	Y
0x11	ADC_RESULT_CH4_I	N	**0x29**	EN_WB_ON_CH	Y
0x12	ADC_RESULT_CH4_I_LSB	N	**0x2A**	EN_SHRT_VS_CH	Y
0x13	ADC_RESULT_CH1_T	N	**0x2B**	ADC_ISNS_DIS	N
0x14	ADC_RESULT_CH2_T	N	**0x2C**	ADC_TSNS_DIS	N
0x15	ADC_RESULT_CH3_T	N	**0x2D**	ADC_VSNS_DIS	N
0x16	ADC_RESULT_CH4_T	N	**0x2E**	ADC_CONFIG1	N
0x17	ADC_RESULT_CH1_V	N	**0x2F**	CFG_CRC	Y

There are some registers contains bits that are not available in the BS version. The bits marked **RSVD** in Table 8-11 are not functional in the BS version.

Table 8-11. Registers with Partial Bits Available in BS

ADDRESS	REG_NAME	b7	b6	b5	b4	b3	b2	b1	b0
0x23	DEV_CONFIG3	**RSVD**	ILIM_SET	**RSVD**	PARALLEL_34	PARALLEL_12	ILIM_CONFIG	INRUSH_ILIM	INRUSH_ILIM
0x25	DEV_CONFIG5	RSVD	RSVD	**RSVD**	AUTO_RETRY_DIS	WB_SVS_BLANK1	WB_SVS_BLANK0	SW_FS_CFG	FLT_BIT_LTCH_DIS
0x27	FAULT_MASK	MASK_SPI_ERR	MASK_WD_ERR	MASK_ILIMIT	**RSVD**	MASK_SHRT_VS	MASK_WB_OFF	MASK_WB_ON	MASK_VSUV

Copyright © 2024 Texas Instruments Incorporated

8.6 TPS274C65 Registers

Table 8-12 lists the memory-mapped registers for the TPS274C65 registers. All register offset addresses not listed in Table 8-12 should be considered as reserved locations and the register contents should not be modified.

Table 8-12. TPS274C65 Registers

Offset	Acronym	Register Name	Section
0h	FAULT_TYPE_STAT	Fault Type Register	Section 8.6.1
1h	FAULT_CH_STAT	Faulted channel register	Section 8.6.2
2h	FAULT_GLOBAL_TYPE	Global fault type register	Section 8.6.3
3h	SHRT_VS_CH_STAT	Short_to VS Faulted Channel Register	Section 8.6.4
4h	WB_OFF_CH_STAT	Off-state Wire-break faulted channel register	Section 8.6.5
5h	WB_ON_CH_STAT	On-state Wire-break faulted channel register	Section 8.6.6
6h	ILIMIT_CH_STAT	Current Limit faulted channel register	Section 8.6.7
7h	THERMAL_SD_CH_STAT	Thermal Shutdown faulted channel register	Section 8.6.8
8h	THERMAL_WRN_CH_STAT	Thermal warning threshold faulted channel register	Section 8.6.9
9h	RVRS_BLK_CH_STAT	Reverse Current flow (blocked) faulted channel register	Section 8.6.10
Bh	ADC_RESULT_CH1_I	ADC conversion result ISNS CH1	Section 8.6.11
Ch	ADC_RESULT_CH1_I_LSB	ADC conversion result ISNS CH1 LSBs	Section 8.6.12
Dh	ADC_RESULT_CH2_I	ADC conversion result ISNS CH2	Section 8.6.13
Eh	ADC_RESULT_CH2_I_LSB	ADC conversion result ISNS CH2 LSBs	Section 8.6.14
Fh	ADC_RESULT_CH3_I	ADC conversion result ISNS CH3	Section 8.6.15
10h	ADC_RESULT_CH3_I_LSB	ADC conversion result ISNS CH3 LSBs	Section 8.6.16
11h	ADC_RESULT_CH4_I	ADC conversion result ISNS CH4	Section 8.6.17
12h	ADC_RESULT_CH4_I_LSB	ADC conversion result ISNS CH4 LSBs	Section 8.6.18
13h	ADC_RESULT_CH1_T	ADC conversion result TSNS CH1	Section 8.6.19
14h	ADC_RESULT_CH2_T	ADC conversion result TSNS CH2	Section 8.6.20
15h	ADC_RESULT_CH3_T	ADC conversion result TSNS CH3	Section 8.6.21
16h	ADC_RESULT_CH4_T	ADC conversion result TSNS CH4	Section 8.6.22
17h	ADC_RESULT_CH1_V	ADC conversion result VSNS CH1	Section 8.6.23
18h	ADC_RESULT_CH2_V	ADC conversion result VSNS CH2	Section 8.6.24
19h	ADC_RESULT_CH3_V	ADC conversion result VSNS CH3	Section 8.6.25
1Ah	ADC_RESULT_CH4_V	ADC conversion result VSNS CH4	Section 8.6.26
1Bh	ADC_RESULT_VS	ADC conversion result VS	Section 8.6.27
1Ch	ADC_RESULT_VS_LSB	ADC conversion result VS	Section 8.6.28
1Dh	SW_STATE	Switch state per channel register	Section 8.6.29
1Eh	LED1_4_CTL	LED1-LED4 Control	Section 8.6.30
1Fh	LED_5_8_CTL	LED5-LED8 Control	Section 8.6.31
20h	FS_SW_STATE	SPI/WD error state per channel register	Section 8.6.32
21h	DEV_CONFIG1	Device Configuration Register #1	Section 8.6.33
22h	DEV_CONFIG2	Device Configuration Register #2	Section 8.6.34
23h	DEV_CONFIG3	Device Configuration Register #3	Section 8.6.35
24h	DEV_CONFIG4	Device Configuration Register #4	Section 8.6.36
25h	DEV_CONFIG5	Device Configuration Register #5	Section 8.6.37
26h	DEV_CONFIG6	Device Configuration Register #6	Section 8.6.38
27h	FAULT_MASK	Fault Mask register	Section 8.6.39
28h	EN_WB_OFF	Enable Off-state Wire-break fault per channel	Section 8.6.40
29h	EN_WB_ON	Enable On-state Wire-break fault per channel	Section 8.6.41

Copyright © 2024 Texas Instruments Incorporated

Table 8-12. TPS274C65 Registers (continued)

Offset	Acronym	Register Name	Section
2Ah	EN_SHRT_VS	Enable Output Short_to-VS fault per channel	Section 8.6.42
2Bh	ADC_ISNS_DIS	ADC conversion disable ISNS channels	Section 8.6.43
2Ch	ADC_TSNS_DIS	ADC conversion disable TSNS channels	Section 8.6.44
2Dh	ADC_VSNS_DIS	ADC conversion disable VSNS channels	Section 8.6.45
2Eh	ADC_CONFIG1	ADC configuration - disable conversion	Section 8.6.46
2Fh	CRC_CONFIG	Configure CRC	Section 8.6.47

Complex bit access types are encoded to fit into small table cells. Table 8-13 shows the codes that are used for access types in this section.

Table 8-13. TPS274C65 Access Type Codes

Access Type	Code	Description
Read Type		
R	R	Read
RC	R C	Read to Clear
Write Type		
W	W	Write
Reset or Default Value		
-n		Value after reset or the default value

8.6.1 FAULT_TYPE_STAT Register (Offset = 0h) [Reset = 80h]

FAULT_TYPE_STAT is shown in Table 8-14.

Return to the Summary Table.

The register reports the fault type in any of the channels (OR of all channels)

Table 8-14. FAULT_TYPE_STAT Register Field Descriptions

Bit	Field	Type	Reset	Description
7	SUPPLY_FLT	R	1h	The bit is set if either the VDD_UVLO or VS_UV are faults occur. If FLT_LTCH_DIS bit is set, then the fault bit is latched and is cleared only when the FLT_GLOBAL_TYPE register is read and the fault condition no longer exists. 0h = no UV fault in VDD, VINT or VS 1h = UV fault in VDD, VINT or VS
6	RVRS_BLK_FLT	R	0h	The bit is set if there is a reverse current fault in any one of the channels. If FLT_LTCH_DIS bit is set, then the fault bit is latched and is cleared only when the RVRS_BLK_CH_STAT register is read and the fault condition no longer exists. 0h = no reverse current blocking fault in any of the channels 1h = reverse current blocking fault in one of the channels
5	CHAN_TSD	R	0h	The bit is set if there is a thermal shutdown fault due to thermal overload in any one of the channels. If FLT_LTCH_DIS bit is set, then the fault bit is latched and is cleared only when the THERMAL_SD_CH_STAT register is read and the fault condition no longer exists. 0h = no thermal shutdown fault in any of the channels 1h = thermal shutdown fault in one of the channels

Copyright © 2024 Texas Instruments Incorporated

Table 8-14. FAULT_TYPE_STAT Register Field Descriptions (continued)

Bit	Field	Type	Reset	Description
4	ILIMIT_FLT	R	0h	The bit is set if there is a current limit fault due to ovecurrent in any one of the channels. If FLT_LTCH_DIS bit is set, then the fault bit is latched and is cleared only when the ILIMIT_CH_STAT register is read and the fault condition no longer exists. 0h = no current limit (overcurrent) fault in any of the channels 1h = current limit (overcurrent) fault in one of the channels
3	WB_ON_FLT	R	0h	The bit is set if there is a wire break in the on state fault in any one of the channels. If FLT_LTCH_DIS bit is set, then the fault bit is latched and is cleared only when the WB_ON_CH_STAT register is read and the fault condition no longer exists 0h = no on-state wire-break fault in any of the channels 1h = on-state wire-break fault in one of the channels
2	WB_OFF_FLT	R	0h	The bit is set if either there is a wire break in the off-state fault in any one of the channels. If FLT_LTCH_DIS bit is set, then the fault bit is latched and is cleared only when the WB_OFF_CH_STAT register is read and the fault condition no longer exists 0h = no off-state wire-break fault in any of the channels 1h = off-state wire-break fault in one of the channels
1	SHRT_VS_FLT	R	0h	The bit is set if there is a short to VS supply in the off-state fault in any one of the channels. If FLT_LTCH_DIS bit is set, then the fault bit is latched and is cleared only when the SHRT_VS_CH_STAT register is read and the fault condition no longer exists 0h = no off-state short to VS fault in any of the channels 1h = off-state short to VS fault in one of the channels
0	GLOBAL_ERR_WRN	R	0h	The bit is set if there is a global fault reported in the FLT_GLOBAL_TYPE register (SPI error, watchdog error, VS_UV_WRN fault or chip thermal warning occurs. If FLT_LTCH_DIS bit is set, then the fault bit is latched and is cleared only when the FLT_GLOBAL_TYPE register is read and the fault condition no longer exists. 0h = no global fault (SPI error, watchdog error, VS_UV_WRN fault or chip thermal warning) 1h = One of the following errors have occurred: SPI error, watchdog error, VS_UV_WRN fault or chip thermal warning

8.6.2 FAULT_CH_STAT Register (Offset = 1h) [Reset = 00h]

FAULT_CH_STAT is shown in Table 8-15.

Return to the Summary Table.

The register reports faulted channel(s) (OR of all fault types in each channel)

Table 8-15. FAULT_CH_STAT Register Field Descriptions

Bit	Field	Type	Reset	Description
7-4	RESERVED	R	0h	Reserved
3	CH4	R	0h	The bit is set if any type of fault (RVRS_BLK, THERMAL_SD_CH, ILIMIT, WB_ON, WB_OFF, SHRT_VS) occurs in CH4 0h = No fault in CH4 1h = One or more fault has occurred in CH4
2	CH3	R	0h	The bit is set if any type of fault (RVRS_BLK, THERMAL_SD_CH, ILIMIT, WB_ON, WB_OFF, SHRT_VS) occurs in CH3 0h = No fault in CH4 1h = One or more fault has occurred in CH2
1	CH2	R	0h	The bit is set if any type of fault (RVRS_BLK, THERMAL_SD_CH, ILIMIT, WB_ON, WB_OFF, SHRT_VS) occurs in CH2 0h = No fault in CH4 1h = One or more fault has occurred in CH3

Copyright © 2024 Texas Instruments Incorporated

Table 8-15. FAULT_CH_STAT Register Field Descriptions (continued)

Bit	Field	Type	Reset	Description
0	CH1	R	0h	The bit is set if any type of fault (RVRS_BLK, THERMAL_SD_CH, ILIMIT, WB_ON, WB_OFF, SHRT_VS) occurs in CH1 0h = No fault in CH4 1h = One or more fault has occurred in CH1

8.6.3 FAULT_GLOBAL_TYPE Register (Offset = 2h) [Reset = 47h]

FAULT_GLOBAL_TYPE is shown in Table 8-16.

Return to the Summary Table.

The register reports the type of global fault that has occurred in the IC

Table 8-16. FAULT_GLOBAL_TYPE Register Field Descriptions

Bit	Field	Type	Reset	Description
7	RESERVED	R	0h	Reserved
6	POR	RC	1h	The bit is indicative of whether a power on reset has occurred. 0h = There is no power-on reset anytime after the last register read The register bit is cleared on read, so if read again and the bit is 0, means that no power-on reset has occurred since the read. 1h = A power-on reset has occurred since the last register read.
5	CHIP_THERMALSD	RC	0h	The bit is set if the chip thermal warning is triggered at any time. The fault bit is cleared if the GLOBAL_FAULT_TYPE register is read and the chip thermal shutdown error condition is removed 0h = No chip thermal warning 1h = Chip thermal warning threshold exceeded
4	SPI_ERR	RC	0h	The bit is set if there is an SPI communication error either from format, clock or CRC errors.The fault bit is latched and cleared only after read and the error is removed. 0h = No SPI communication error fault 1h = SPI communication error either from format, clock or CRC has occurred
3	WD_ERR	RC	0h	The bit is set if the watchdog timeout on SPI read or write occurs. The fault bit is latched and cleared only after read and the error is removed. 0h = No SPI interface watchdog error 1h = SPI watchdog timeout error has occurred
2	VDD_UVLO	RC	1h	The bit is set if VDD supply is below the UVLO threshold at any time. The fault bit is cleared if the GLOBAL_FAULT_TYPE register is read and the UVLO condition is removed 0h = No VDD UVLO fault 1h = VDD UVLO fault
1	VS_UV_WRN	RC	1h	The bit is set if VS supply is below the UV warning (UV_WRN) threshold at any time. The fault bit is cleared if the GLOBAL_FAULT_TYPE register is read and the UV condition is removed 0h = No VS UV_WRN fault 1h = VS UV_WRN fault
0	VS_UV	RC	1h	The bit is set if VS supply is below the UV threshold at any time. The fault bit is cleared if the GLOBAL_FAULT_TYPE register is read and the UV condition is removed 0h = No VS UV fault 1h = VS UV fault

8.6.4 SHRT_VS_CH_STAT Register (Offset = 3h) [Reset = 00h]

SHRT_VS_CH_STAT is shown in Table 8-17.

Copyright © 2024 Texas Instruments Incorporated

Return to the Summary Table.

The register reports faulted channel(s) with the off-state short-to-supply fault

Table 8-17. SHRT_VS_CH_STAT Register Field Descriptions

Bit	Field	Type	Reset	Description
7-4	RESERVED	R	0h	Reserved
3	SHRT_VS_CH4	RC	0h	The bit is set if any short to supply (VS) fault has occurred at any time in CH4. The fault is latched and cleared when the SHRT_VS_CH_STAT register is read and fault condition does not exist anymore. 0h = No fault in CH4 1h = Short to VS fault has occurred in CH4
2	SHRT_VS_CH3	RC	0h	The bit is set if any short to supply (VS) fault has occurred at any time in CH3. The fault is latched and cleared when the SHRT_VS_CH_STAT register is read and fault condition does not exist anymore. 0h = No fault in CH4 1h = Short to VS fault has occurred in CH3
1	SHRT_VS_CH2	RC	0h	The bit is set if any short to supply (VS) fault has occurred at any time in CH2. The fault is latched and cleared when the SHRT_VS_CH_STAT register is read and fault condition does not exist anymore. 0h = No fault in CH4 1h = Short to VS fault has occurred in CH2
0	SHRT_VS_CH1	RC	0h	The bit is set if any short to supply (VS) fault has occurred at any time in CH1. The fault is latched and cleared when the SHRT_VS_CH_STAT register is read and fault condition does not exist anymore. 0h = No fault in CH4 1h = Short to VS fault has occurred in CH1

8.6.5 WB_OFF_CH_STAT Register (Offset = 4h) [Reset = 00h]

WB_OFF_CH_STAT is shown in Table 8-18.

Return to the Summary Table.

The register reports faulted channel(s) with the off-state wire-break fault

Table 8-18. WB_OFF_CH_STAT Register Field Descriptions

Bit	Field	Type	Reset	Description
7-4	RESERVED	R	0h	Reserved
3	WB_OFF_CH4	RC	0h	The bit is set if the wire break (open load) fault in off-state has occurred at any time in CH4. The fault is latched and cleared when the WB_OFF_CH_STAT register is read and fault condition does not exist anymore. 0h = No wire-break (off-state) fault in CH4 1h = Wire break (open load) fault in off-state has occurred in CH4
2	WB_OFF_CH3	RC	0h	The bit is set if the wire break (open load) fault in off-state has occurred at any time in CH3. The fault is latched and cleared when the WB_OFF_CH_STAT register is read and fault condition does not exist anymore. 0h = No wire-break (off-state) fault in CH3 1h = Wire break (open load) fault in off-state has occurred in CH3
1	WB_OFF_CH2	RC	0h	The bit is set if the wire break (open load) fault in off-state has occurred at any time in CH2. The fault is latched and cleared when the WB_OFF_CH_STAT register is read and fault condition does not exist anymore. 0h = No wire-break (off-state) fault in CH2 1h = Wire break (open load) fault in off-state has occurred in CH2

Copyright © 2024 Texas Instruments Incorporated

Table 8-18. WB_OFF_CH_STAT Register Field Descriptions (continued)

Bit	Field	Type	Reset	Description
0	WB_OFF_CH1	RC	0h	The bit is set if the wire break (open load) fault in off-state has occurred at any time in CH1. The fault is latched and cleared when the WB_OFF_CH_STAT register is read and fault condition does not exist anymore. 0h = No wire-break (off-state) fault in CH1 1h = Wire break (open load) fault in off-state has occurred in CH1

8.6.6 WB_ON_CH_STAT Register (Offset = 5h) [Reset = 00h]

WB_ON_CH_STAT is shown in Table 8-19.

Return to the Summary Table.

The register reports faulted channel(s) with the on-state wire-break fault

Table 8-19. WB_ON_CH_STAT Register Field Descriptions

Bit	Field	Type	Reset	Description
7-4	RESERVED	R	0h	Reserved
3	WB_ON_CH4	RC	0h	The bit is set if the wire break (open load) fault in off-state has occurred at any time in CH4. The fault is latched and cleared when the WB_OFF_CH_STAT register is read and fault condition does not exist anymore. 0h = No wire-break (on-state) fault in CH4 1h = Wire break (open load) fault in on-state has occurred in CH4
2	WB_ON_CH3	RC	0h	The bit is set if the wire break (open load) fault in off-state has occurred at any time in CH3. The fault is latched and cleared when the WB_OFF_CH_STAT register is read and fault condition does not exist anymore. 0h = No wire-break (on-state) fault in CH3 1h = Wire break (open load) fault in on-state has occurred in CH3
1	WB_ON_CH2	RC	0h	The bit is set if the wire break (open load) fault in off-state has occurred at any time in CH2. The fault is latched and cleared when the WB_OFF_CH_STAT register is read and fault condition is cleared. 0h = No wire-break (on-state) fault in CH2 1h = Wire break (open load) fault in on-state has occurred in CH2
0	WB_ON_CH1	RC	0h	The bit is set if the wire break (open load) fault in off-state has occurred at any time in CH1. The fault is latched and cleared when the WB_OFF_CH_STAT register is read and fault condition does not exist anymore. 0h = No wire-break (on-state) fault in CH1 1h = Wire break (open load) fault in on-state has occurred in CH1

8.6.7 ILIMIT_CH_STAT Register (Offset = 6h) [Reset = 00h]

ILIMIT_CH_STAT is shown in Table 8-20.

Return to the Summary Table.

The register reports faulted channel(s) with the current limit fault

Table 8-20. ILIMIT_CH_STAT Register Field Descriptions

Bit	Field	Type	Reset	Description
7-4	RESERVED	R	0h	Reserved

Copyright © 2024 Texas Instruments Incorporated

Table 8-20. ILIMIT_CH_STAT Register Field Descriptions (continued)

Bit	Field	Type	Reset	Description
3	ILIMIT_CH4	RC	0h	The bit is set if current limiting due to overcurrent has occurred at any time in CH4. The fault is latched and cleared when the ILIMIT_CH_STAT register is read and fault condition does not exist anymore. 0h = No current limit fault in CH4 1h = Current limit due to overcurrent fault has occurred in CH4
2	ILIMIT_CH3	RC	0h	The bit is set if current limiting due to overcurrent has occurred at any time in CH3. The fault is latched and cleared when the ILIMIT_CH_STAT register is read and fault condition does not exist anymore. 0h = No current limit fault in CH3 1h = Current limit due to overcurrent fault has occurred in CH3
1	ILIMIT_CH2	RC	0h	The bit is set if current limiting due to overcurrent has occurred at any time in CH2. The fault is latched and cleared when the ILIMIT_CH_STAT register is read and fault condition does not exist anymore. 0h = No current limit fault in CH2 1h = Current limit due to overcurrent fault has occurred in CH2
0	ILIMIT_CH1	RC	0h	The bit is set if current limiting due to overcurrent has occurred at any time in CH1. The fault is latched and cleared when the ILIMIT_CH_STAT register is read and fault condition does not exist anymore. 0h = No current limit fault in CH1 1h = Current limit due to overcurrent fault has occurred in CH1

8.6.8 THERMAL_SD_CH_STAT Register (Offset = 7h) [Reset = 00h]

THERMAL_SD_CH_STAT is shown in Table 8-21.

Return to the Summary Table.

The register reports faulted channel(s) with the thermal shutdown fault

Table 8-21. THERMAL_SD_CH_STAT Register Field Descriptions

Bit	Field	Type	Reset	Description
7-4	RESERVED	R	0h	Reserved
3	THERMAL_SD_CH4	RC	0h	The bit is set if the thermal shutdown has occurred at any time in CH4. The fault is latched and cleared when the THERMAL_SD_CH_STAT register is read and channel temperature has fallen below the thermal shutdown reset threshold. 0h = No thermal shutdown fault in CH4 1h = Thermal shudtwon has occurred in CH4
2	THERMAL_SD_CH3	RC	0h	The bit is set if the thermal shutdown has occurred at any time in CH3. The fault is latched and cleared when the THERMAL_SD_CH_STAT register is read and channel temperature has fallen below the thermal shutdown reset threshold. 0h = No thermal shutdown fault in CH3 1h = Thermal shudtwon has occurred in CH3
1	THERMAL_SD_CH2	RC	0h	The bit is set if the thermal shutdown has occurred at any time in CH2. The fault is latched and cleared when the THERMAL_SD_CH_STAT register is read and channel temperature has fallen below the thermal shutdown reset threshold. 0h = No thermal shutdown fault in CH2 1h = Thermal shudtwon has occurred in CH2

Copyright © 2024 Texas Instruments Incorporated

Table 8-21. THERMAL_SD_CH_STAT Register Field Descriptions (continued)

Bit	Field	Type	Reset	Description
0	THERMAL_SD_CH1	RC	0h	The bit is set if the thermal shutdown has occurred at any time in CH1. The fault is latched and cleared when the THERMAL_SD_CH_STAT register is read and channel temperature has fallen below the thermal shutdown reset threshold. 0h = No thermal shutdown fault in CH1 1h = Thermal shudtwon has occurred in CH1

8.6.9 THERMAL_WRN_CH_STAT Register (Offset = 8h) [Reset = 00h]

THERMAL_WRN_CH_STAT is shown in Table 8-22.

Return to the Summary Table.

The register reports channel(s) with the temperature above thermal warning threshold

Table 8-22. THERMAL_WRN_CH_STAT Register Field Descriptions

Bit	Field	Type	Reset	Description
7-4	RESERVED	R	0h	Reserved
3	THERMAL_WRN_CH4	R	0h	The bit is set if FET temperature is above the overtemperature warning threshold in CH4. The bit is cleared when over-temperature earning condition does not exist anymore. 0h = FET temperatire below over-temperature warning threshold in CH4 1h = FET temperatire above over-temperature warning threshold in CH4
2	THERMAL_WRN_CH3	R	0h	The bit is set if FET temperature is above the overtemperature warning threshold in CH3. The bit is cleared when over-temperature earning condition does not exist anymore. 0h = FET temperatire below over-temperature warning threshold in CH4 1h = FET temperatire above over-temperature warning threshold in CH3
1	THERMAL_WRN_CH2	R	0h	The bit is set if FET temperature is above the overtemperature warning threshold in CH2. The bit is cleared when over-temperature earning condition does not exist anymore. 0h = FET temperatire below over-temperature warning threshold in CH2 1h = FET temperatire above over-temperature warning threshold in CH2
0	THERMAL_WRN_CH1	R	0h	The bit is set if FET temperature is above the overtemperature warning threshold in CH1. The bit is cleared when over-temperature earning condition does not exist anymore. 0h = FET temperatire below over-temperature warning threshold in CH1 1h = FET temperatire above over-temperature warning threshold in CH1

8.6.10 RVRS_BLK_CH_STAT Register (Offset = 9h) [Reset = 00h]

RVRS_BLK_CH_STAT is shown in Table 8-23.

Return to the Summary Table.

The register reports faulted channel(s) with the reverse current flow (blocked) fault

Table 8-23. RVRS_BLK_CH_STAT Register Field Descriptions

Bit	Field	Type	Reset	Description
7-4	RESERVED	R	0h	Reserved

Copyright © 2024 Texas Instruments Incorporated

Table 8-23. RVRS_BLK_CH_STAT Register Field Descriptions (continued)

Bit	Field	Type	Reset	Description
3	RVRS_BLK_CH4	RC	0h	The bit is set if the reverse current fault (blocked) has occurred at any time in CH4. The fault is latched and cleared when the RVRS_BLK_CH_STAT register is read. 0h = No reverse current fault in CH4 1h = Reverse current flow (blocked) fault in on-state has occurred in CH4
2	RVRS_BLK_CH3	RC	0h	The bit is set if the reverse current fault (blocked) has occurred at any time in CH3. The fault is latched and cleared when the RVRS_BLK_CH_STAT register is read. 0h = No reverse current fault in CH3 1h = Reverse current flow (blocked) fault in on-state has occurred in CH4
1	RVRS_BLK_CH2	RC	0h	The bit is set if the reverse current fault (blocked) has occurred at any time in CH2. The fault is latched and cleared when the RVRS_BLK_CH_STAT register is read. 0h = No reverse current fault in CH2 1h = Reverse current flow (blocked) fault in on-state has occurred in CH4
0	RVRS_BLK_CH1	RC	0h	The bit is set if the reverse current fault (blocked) has occurred at any time in CH1. The fault is latched and cleared when the RVRS_BLK_CH_STAT register is read. 0h = No reverse current fault in CH1 1h = Reverse current flow (blocked) fault in on-state has occurred in CH4

8.6.11 ADC_RESULT_CH1_I Register (Offset = Bh) [Reset = 00h]

ADC_RESULT_CH1_I is shown in Table 8-24.

Return to the Summary Table.

The register records ADC conversion result for current sense of CH1

Table 8-24. ADC_RESULT_CH1_I Register Field Descriptions

Bit	Field	Type	Reset	Description
7-0	ADC_ISNS_CH1	R	0h	ADC result (8-bits) from the conversion of the current in CH1

8.6.12 ADC_RESULT_CH1_I_LSB Register (Offset = Ch) [Reset = 00h]

ADC_RESULT_CH1_I_LSB is shown in Table 8-25.

Return to the Summary Table.

The register records ADC conversion result for current sense of CH1 (Two LSBs)

Table 8-25. ADC_RESULT_CH1_I_LSB Register Field Descriptions

Bit	Field	Type	Reset	Description
7-2	RESERVED	R	0h	Reserved
1-0	ADC_ISNS_CH1_LSB	R	0h	Least Significant Bits for ADC result from conversion of the current in CH1

8.6.13 ADC_RESULT_CH2_I Register (Offset = Dh) [Reset = 00h]

ADC_RESULT_CH2_I is shown in Table 8-26.

Return to the Summary Table.

The register records ADC conversion result for current sense of CH2

Table 8-26. ADC_RESULT_CH2_I Register Field Descriptions

Bit	Field	Type	Reset	Description
7-0	ADC_ISNS_CH2	R	0h	ADC result (8-bits) from the conversion of the current in CH2

8.6.14 ADC_RESULT_CH2_I_LSB Register (Offset = Eh) [Reset = 00h]

ADC_RESULT_CH2_I_LSB is shown in Table 8-27.

Return to the Summary Table.

The register records ADC conversion result for current sense of CH2 (Two LSBs)

Table 8-27. ADC_RESULT_CH2_I_LSB Register Field Descriptions

Bit	Field	Type	Reset	Description
7-2	RESERVED	R	0h	Reserved
1-0	ADC_ISNS_CH2_LSB	R	0h	Least Significant Bits for ADC result from conversion of the current in CH2

8.6.15 ADC_RESULT_CH3_I Register (Offset = Fh) [Reset = 00h]

ADC_RESULT_CH3_I is shown in Table 8-28.

Return to the Summary Table.

The register records ADC conversion result for current sense of CH3

Table 8-28. ADC_RESULT_CH3_I Register Field Descriptions

Bit	Field	Type	Reset	Description
7-0	ADC_ISNS_CH3	R	0h	ADC result (8-bits) from the conversion of the current in CH3

8.6.16 ADC_RESULT_CH3_I_LSB Register (Offset = 10h) [Reset = 00h]

ADC_RESULT_CH3_I_LSB is shown in Table 8-29.

Return to the Summary Table.

The register records ADC conversion result for current sense of CH3 (Two LSBs)

Table 8-29. ADC_RESULT_CH3_I_LSB Register Field Descriptions

Bit	Field	Type	Reset	Description
7-2	RESERVED	R	0h	Reserved
1-0	ADC_ISNS_CH3_LSB	R	0h	Least Significant Bits for ADC result from conversion of the current in CH3

8.6.17 ADC_RESULT_CH4_I Register (Offset = 11h) [Reset = 00h]

ADC_RESULT_CH4_I is shown in Table 8-30.

Return to the Summary Table.

The register records ADC conversion result for current sense of CH4

Copyright © 2024 Texas Instruments Incorporated

Table 8-30. ADC_RESULT_CH4_I Register Field Descriptions

Bit	Field	Type	Reset	Description
7-0	ADC_ISNS_CH4	R	0h	ADC result (8-bits) from the conversion of the current in CH4

8.6.18 ADC_RESULT_CH4_I_LSB Register (Offset = 12h) [Reset = 00h]

ADC_RESULT_CH4_I_LSB is shown in Table 8-31.

Return to the Summary Table.

The register records ADC conversion result for current sense of CH4 (Two LSBs)

Table 8-31. ADC_RESULT_CH4_I_LSB Register Field Descriptions

Bit	Field	Type	Reset	Description
7-2	RESERVED	R	0h	Reserved
1-0	ADC_ISNS_CH4_LSB	R	0h	Least Significant Bits for ADC result from conversion of the current in CH4

8.6.19 ADC_RESULT_CH1_T Register (Offset = 13h) [Reset = 00h]

ADC_RESULT_CH1_T is shown in Table 8-32.

Return to the Summary Table.

The register records ADC conversion result for temperature sense of CH1

Table 8-32. ADC_RESULT_CH1_T Register Field Descriptions

Bit	Field	Type	Reset	Description
7-0	ADC_TSNS_CH1	R	0h	ADC result (8-bits) from the conversion of the temperature in CH1

8.6.20 ADC_RESULT_CH2_T Register (Offset = 14h) [Reset = 00h]

ADC_RESULT_CH2_T is shown in Table 8-33.

Return to the Summary Table.

The register records ADC conversion result for temperature sense of CH2

Table 8-33. ADC_RESULT_CH2_T Register Field Descriptions

Bit	Field	Type	Reset	Description
7-0	ADC_TSNS_CH2	R	0h	ADC result (8-bits) from the conversion of the temperature in CH2

8.6.21 ADC_RESULT_CH3_T Register (Offset = 15h) [Reset = 00h]

ADC_RESULT_CH3_T is shown in Table 8-34.

Return to the Summary Table.

The register records ADC conversion result for temperature sense of CH3

Table 8-34. ADC_RESULT_CH3_T Register Field Descriptions

Bit	Field	Type	Reset	Description
7-0	ADC_TSNS_CH3	R	0h	ADC result (8-bits) from the conversion of the temperature in CH3

Copyright © 2024 Texas Instruments Incorporated

8.6.22 ADC_RESULT_CH4_T Register (Offset = 16h) [Reset = 00h]

ADC_RESULT_CH4_T is shown in Table 8-35.

Return to the Summary Table.

The register records ADC conversion result for temperature sense of CH4

Table 8-35. ADC_RESULT_CH4_T Register Field Descriptions

Bit	Field	Type	Reset	Description
7-0	ADC_TSNS_CH4	R	0h	ADC result (8-bits) from the conversion of the temperature in CH4

8.6.23 ADC_RESULT_CH1_V Register (Offset = 17h) [Reset = 00h]

ADC_RESULT_CH1_V is shown in Table 8-36.

Return to the Summary Table.

The register records ADC conversion result for voltage sense of CH1

Table 8-36. ADC_RESULT_CH1_V Register Field Descriptions

Bit	Field	Type	Reset	Description
7-0	ADC_VSNS_CH1	R	0h	ADC result (8-bits) from the conversion of the voltage in CH1

8.6.24 ADC_RESULT_CH2_V Register (Offset = 18h) [Reset = 00h]

ADC_RESULT_CH2_V is shown in Table 8-37.

Return to the Summary Table.

The register records ADC conversion result for voltage sense of CH2

Table 8-37. ADC_RESULT_CH2_V Register Field Descriptions

Bit	Field	Type	Reset	Description
7-0	ADC_VSNS_CH2	R	0h	ADC result (8-bits) from the conversion of the voltage in CH2

8.6.25 ADC_RESULT_CH3_V Register (Offset = 19h) [Reset = 00h]

ADC_RESULT_CH3_V is shown in Table 8-38.

Return to the Summary Table.

The register records ADC conversion result for voltage sense of CH3

Table 8-38. ADC_RESULT_CH3_V Register Field Descriptions

Bit	Field	Type	Reset	Description
7-0	ADC_VSNS_CH3	R	0h	ADC result (8-bits) from the conversion of the voltage in CH3

8.6.26 ADC_RESULT_CH4_V Register (Offset = 1Ah) [Reset = 00h]

ADC_RESULT_CH4_V is shown in Table 8-39.

Return to the Summary Table.

The register records ADC conversion result for voltage sense of CH4

Copyright © 2024 Texas Instruments Incorporated

Table 8-39. ADC_RESULT_CH4_V Register Field Descriptions

Bit	Field	Type	Reset	Description
7-0	ADC_VSNS_CH4	R	0h	ADC result (8-bits) from the conversion of the voltage in CH4

8.6.27 ADC_RESULT_VS Register (Offset = 1Bh) [Reset = 00h]

ADC_RESULT_VS is shown in Table 8-40.

Return to the Summary Table.

The register records ADC conversion result for supply voltage sense

Table 8-40. ADC_RESULT_VS Register Field Descriptions

Bit	Field	Type	Reset	Description
7-0	ADC_VS_SNS	R	0h	ADC result (8-bits) from the conversion of the supply voltage input (VS pin)

8.6.28 ADC_RESULT_VS_LSB Register (Offset = 1Ch) [Reset = 00h]

ADC_RESULT_VS_LSB is shown in Table 8-41.

Return to the Summary Table.

The register records ADC conversion result for supply voltage sense (Two LSBs)

Table 8-41. ADC_RESULT_VS_LSB Register Field Descriptions

Bit	Field	Type	Reset	Description
7-2	RESERVED	R	0h	Reserved
1-0	ADC_VS_SNS_CH4_LSB	R	0h	Least Significant Bits for ADC result from conversion of the supply voltage input (VS pin)

8.6.29 SW_STATE Register (Offset = 1Dh) [Reset = 00h]

SW_STATE is shown in Table 8-42.

Return to the Summary Table.

The register sets the switch state (ON/OFF) of each output channel. The switch state bits in the SPI frame are ignored when a write to this register is performed (only the contents of the DATA_IN field of the SPI frame are used to update the switch state)

Table 8-42. SW_STATE Register Field Descriptions

Bit	Field	Type	Reset	Description
7-4	RESERVED	R	0h	Reserved
3	CH4_ON	R/W	0h	Set this bit to 1 to turn on the FET and CH4 output ON 0h = CH4 Output set to OFF (FET is OFF). The switch state bits in the SPI frame are ignored 1h = CH4 Output set to ON (FET is ON). The switch state bits in the SPI frame are ignored
2	CH3_ON	R/W	0h	Set this bit to 1 to turn on the FET and CH3 output ON 0h = CH3 Output set to OFF (FET is OFF). The switch state bits in the SPI frame are ignored. 1h = CH3 Output set to ON (FET is ON). The switch state bits in the SPI frame are ignored
1	CH2_ON	R/W	0h	Set this bit to 1 to turn on the FET and CH2 output ON 0h = CH2 Output set to OFF (FET is OFF). The switch state bits in the SPI frame are ignored 1h = CH2 Output set to ON (FET is ON). The switch state bits in the SPI frame are ignored

Copyright © 2024 Texas Instruments Incorporated

Table 8-42. SW_STATE Register Field Descriptions (continued)

Bit	Field	Type	Reset	Description
0	CH1_ON	R/W	0h	Set this bit to 1 to turn on the FET and CH1 output ON 0h = CH1 Output set to OFF (FET is OFF). The switch state bits in the SPI frame are ignored 1h = CH1 Output set to ON (FET is ON). The switch state bits in the SPI frame are ignored

8.6.30 LED1_4_CTL Register (Offset = 1Eh) [Reset = 00h]

LED1_4_CTL is shown in Table 8-43.

Return to the Summary Table.

The register sets the LEDs ON or OFF

Table 8-43. LED1_4_CTL Register Field Descriptions

Bit	Field	Type	Reset	Description
7-4	RESERVED	R	0h	Reserved
3	LED4_CTL	R/W	0h	Set this bit to 1 to turn on the LED4 Output Status indicator 0h = LED set to OFF 1h = LED set to ON
2	LED3_CTL	R/W	0h	Set this bit to 1 to turn on the LED3 Output Status indicator 0h = LED set to OFF 1h = LED set to ON
1	LED2_CTL	R/W	0h	Set this bit to 1 to turn on the LED2 Output Status indicator 0h = LED set to OFF 1h = LED set to ON
0	LED1_CTL	R/W	0h	Set this bit to 1 to turn on the LED1 Output Status indicator 0h = LED set to OFF 1h = LED set to ON

8.6.31 LED_5_8_CTL Register (Offset = 1Fh) [Reset = 00h]

LED_5_8_CTL is shown in Table 8-44.

Return to the Summary Table.

The register sets the LEDs ON or OFF

Table 8-44. LED_5_8_CTL Register Field Descriptions

Bit	Field	Type	Reset	Description
7-4	RESERVED	R	0h	Reserved
3	LED8_CTL	R/W	0h	Set this bit to 1 to turn on the LED8 Output Status indicator 0h = LED set to OFF 1h = LED set to ON
2	LED7_CTL	R/W	0h	Set this bit to 1 to turn on the LED7 Output Status indicator 0h = LED set to OFF 1h = LED set to ON
1	LED6_CTL	R/W	0h	Set this bit to 1 to turn on the LED6 Output Status indicator 0h = LED set to OFF 1h = LED set to ON
0	LED5_CTL	R/W	0h	Set this bit to 1 to turn on the LED5 Output Status indicator 0h = LED set to OFF 1h = LED set to ON

Copyright © 2024 Texas Instruments Incorporated

8.6.32 FS_SW_STATE Register (Offset = 20h) [Reset = 00h]

FS_SW_STATE is shown in Table 8-45.

Return to the Summary Table.

The register sets the switch state (ON/OFF) of each output channel in case of SPI_ERR or WD_ERR

Table 8-45. FS_SW_STATE Register Field Descriptions

Bit	Field	Type	Reset	Description
7-4	RESERVED	R	0h	Reserved
3	CH4_FS_ON	R/W	0h	Set this bit to 1 to turn on the CH4 FET and CH4 Output ON when WD_ERR fault has occurred 0h = CH4 Output set to OFF (FET is OFF) when WD_ERR occurs 1h = CH4 Output set to ON (FET is ON) when WD_ERR occurs
2	CH3_FS_ON	R/W	0h	Set this bit to 1 to turn on the CH3 FET and CH4 Output ON when WD_ERR fault has occurred 0h = CH3 Output set to OFF (FET is OFF) when WD_ERR occurs 1h = CH3 Output set to ON (FET is ON) when WD_ERR occurs
1	CH2_FS_ON	R/W	0h	Set this bit to 1 to turn on the CH2 FET and CH4 Output ON when WD_ERR fault has occurred 0h = CH2 Output set to OFF (FET is OFF) whenWD_ERR occurs 1h = CH2 Output set to ON (FET is ON) when WD_ERR occurs
0	CH1_FS_ON	R/W	0h	Set this bit to 1 to turn on the CH1 FET and CH4 Output ON when WD_ERR fault has occurred 0h = CH1 Output set to OFF (FET is OFF) when WD_ERR occurs 1h = CH1 Output set to ON (FET is ON) when WD_ERR occurs

8.6.33 DEV_CONFIG1 Register (Offset = 21h) [Reset = 0Ah]

DEV_CONFIG1 is shown in Table 8-46.

Return to the Summary Table.

Current limit setting and duration of initial inrush level and time channel 1/2

Table 8-46. DEV_CONFIG1 Register Field Descriptions

Bit	Field	Type	Reset	Description
7-4	ILIM_DURATION_12	R/W	0h	Sets the delay period during with inrush current limit level applies (Ch1 and Ch2). 0h = 0ms 1h = 2ms 2h = 4ms 3h = 6ms 4h = 8ms 5h = 10ms 6h = 12ms 7h = 16ms 8h = 20ms 9h = 24ms Ah = 28ms Bh = 32ms Ch = 40ms Dh = 48ms Eh = 56ms Fh = 64ms

Copyright © 2024 Texas Instruments Incorporated

Table 8-46. DEV_CONFIG1 Register Field Descriptions (continued)

Bit	Field	Type	Reset	Description
3-0	ILIM_REG_12	R/W	Ah	Sets the current limit regulation value during overcurrent or short circuit events (Ch1 and Ch2). 0h = 0.25A 1h = 0.33A 2h = 0.4A 3h = 0.48A 4h = 0.56A 5h = 0.67A 6h = 0.72A 7h = 0.85A 8h = 1A 9h = 1.1A Ah = 1.25A Bh = 1.5A Ch = 1.6A Dh = 1.75A Eh = 1.9A Fh = 2.2A

8.6.34 DEV_CONFIG2 Register (Offset = 22h) [Reset = 0Ah]

DEV_CONFIG2 is shown in Table 8-47.

Return to the Summary Table.

Current limit setting and duration of initial inrush level and time channel 3/4

Table 8-47. DEV_CONFIG2 Register Field Descriptions

Bit	Field	Type	Reset	Description
7-4	ILIM_DURATION_34	R/W	0h	Sets the delay period during with inrush current limit level applies (Ch3 and Ch4). 0h = 0ms 1h = 2ms 2h = 4ms 3h = 6ms 4h = 8ms 5h = 10ms 6h = 12ms 7h = 16ms 8h = 20ms 9h = 24ms Ah = 28ms Bh = 32ms Ch = 40ms Dh = 48ms Eh = 56ms Fh = 64ms

Copyright © 2024 Texas Instruments Incorporated

Table 8-47. DEV_CONFIG2 Register Field Descriptions (continued)

Bit	Field	Type	Reset	Description
3-0	ILIM_REG_34	R/W	Ah	Sets the current limit regulation value during overcurrent or short circuit events(Ch3 and Ch4). 0h = 0.25A 1h = 0.33A 2h = 0.4A 3h = 0.48A 4h = 0.56A 5h = 0.67A 6h = 0.72A 7h = 0.85A 8h = 1A 9h = 1.1A Ah = 1.25A Bh = 1.5A Ch = 1.6A Dh = 1.75A Eh = 1.9A Fh = 2.2A

8.6.35 DEV_CONFIG3 Register (Offset = 23h) [Reset = 00h]

DEV_CONFIG3 is shown in Table 8-48.

Return to the Summary Table.

Device Configuration register - RCB function disable in all channels,Sense current range Inrush current Limit level config, Parallel chanel config Inrush current Limit level config, ILIM type config inrush or current limit duration

Table 8-48. DEV_CONFIG3 Register Field Descriptions

Bit	Field	Type	Reset	Description
7	RCB_DIS	R/W	0h	Setting this bit to 1, disable RCB function in all channels 0h = RCB FET gate output set per channel. 1h = Disables RCB function
6	ILIM_SET	R/W	0h	Set this bit to allow CH1/CH2 to have different current limit setting than CH3/CH4 0h = Current Limit / inrush deay the same for all channels as in register DEV_CONFIG1 1h = Current limit / inrsh delay set differenty for CH1/CH2 (as in DEV_CONFIG1) and C3/CH4 (DEV_CONFIG2)
5	ISNS_RANGE	R/W	0h	Sets the load current sense range - optimizing the current sense output 0h = Load current to be sensed less than or equal to 800 mA 1h = Load current to be sensed more than 800 mA
4	PARALLEL_34	R/W	0h	Set this bit to 1 to signal that channels 3 and 4 (CH3 and CH4) are paralleled. Write to this bit is valid only when all four SW_STATE bits are 0 and not rewritten to 1 in the same frame. 0h = CH3 and CH4 are not paralleled together 1h = CH3 and CH4 are paralleled together
3	PARALLEL_12	R/W	0h	Set this bit to 1 to signal that channels 1 and 2(CH1 and CH2) are paralleled. Write to this bit is valid only when all four SW_STATE bits are 0 and not rewritten to 1 in the same frame. 0h = CH1 and CH2 are not paralleled together 1h = CH1 and CH2 are paralleled together
2	ILIM_CONFIG	R/W	0h	Set this bit to 1 to have the ILIM duration applied as the period of inrush current limit or to set as the duration of current limiting before switching off the FET. 0h = ILIM duratiion set as the period of inrush current limit 1h = ILIM duration set as the period of current limiting before switching off FET

Copyright © 2024 Texas Instruments Incorporated

Table 8-48. DEV_CONFIG3 Register Field Descriptions (continued)

Bit	Field	Type	Reset	Description
1-0	INRUSH_LIMIT	R/W	0h	Sets the inrush current limit level that applies during the duration of ILIM inrush duration. See table of inrush current limit level settings in the datasheet

8.6.36 DEV_CONFIG4 Register (Offset = 24h) [Reset = 02h]

DEV_CONFIG4 is shown in Table 8-49.

Return to the Summary Table.

Device Configuration register - Configuring WB_on_threshold current. WB_off PU current, Watchdog enable and timer duration

Table 8-49. DEV_CONFIG4 Register Field Descriptions

Bit	Field	Type	Reset	Description
7	WD_EN	R/W	0h	The bit is set to enable the watchdog function 0h = Watchdog is disabled 1h = Watchdog function is enabled
6-5	WD_TO	R/W	0h	Sets the timeout period for the SPI watchdog monitor 0h = Watchdog timeout 400 us 1h = Watchdog timeout is 400 ms 2h = Watchdog timeout is 800 ms 3h = Watchdog timeout is 1200 ms
4-3	WB_OFF_PU	R/W	0h	Sets the pullup current value (at the OUTx pins) by the off-state wire-break (open load) detection circuit. 0h = I_pu is 50 uA 1h = I_pu is 100 uA 2h = I_pu is 200 uA 3h = I_pu is 500 uA
2-0	WB_ON_THD	R/W	2h	Sets the current threshold for on-state wire-break (open load) detection. See table of settings in the datasheet

8.6.37 DEV_CONFIG5 Register (Offset = 25h) [Reset = 00h]

DEV_CONFIG5 is shown in Table 8-50.

Return to the Summary Table.

Device Configuration register - Device Configuration register - Fault bit LATCH_mode enable, ,Wire break or short to VS blanking time in off-state,Sw_STATE config, fault latch with retry only on enable toggle.

Table 8-50. DEV_CONFIG5 Register Field Descriptions

Bit	Field	Type	Reset	Description
7-6	RESERVED	R	0h	Reserved
5	ADC_EN	R/W	0h	Setting this bit to 1, enables the ADC function 0h = ADC function disabled 1h = ADC enabled
4	AUTO_RETRY_DIS	R/W	0h	Setting this bit to 1, disables the auto-retry and latches the channel Output OFF on thermal shutdown of the channel occurs. Retry can be attempted by toggling enable. 0h = Auto-retry on thermal shutdown of the channel 1h = Latches the channel output off on thermal shutdown - retry on toggling enable.

Copyright © 2024 Texas Instruments Incorporated

Table 8-50. DEV_CONFIG5 Register Field Descriptions (continued)

Bit	Field	Type	Reset	Description
3-2	WB_SVS_BLANK	R/W	0h	Sets the blanking time for wire-break (ON-state and OFF-state) and the short_to_VS faults before the fault is registered. 0h = Blanking time is 0.4 ms 1h = Blanking time is 1.0 ms 2h = Blanking time is 2.0 ms 3h = Blanking time is 4.0 ms
1	SW_FS_CFG	R/W	0h	Set this bit to 1 to have the outputs hold state when WD_ERR faults have occurred. Otherwise the device uses the FS_SW_STATE register bits. 0h = Switch (output) holds state 1h = Switch (output) state set by Sw_FS_STATE register when WD_ERR occurs
0	FLT_LTCH_DIS	R/W	0h	Set this bit to 1 to not latch the fault bits in the register and cleared on read. 0h = Fault bits latched and cleared only on read 1h = Fault bits not latched, cleared when the fault disappears

8.6.38 DEV_CONFIG6 Register (Offset = 26h) [Reset = 0Fh]

DEV_CONFIG6 is shown in Table 8-51.

Return to the Summary Table.

Device Configuration register - Per Channel RCB FET gate off configuration

Table 8-51. DEV_CONFIG6 Register Field Descriptions

Bit	Field	Type	Reset	Description
7-4	RESERVED	R	0h	Reserved
3	RCB_CH4	R/W	1h	Bit determines the reverse current blocking FET gate control in CH4 0h = Reverse current blocking FET gate pulldown (CH4) is enabled (if RCB_DIS bit is not set) 1h = Reverse current blocking function in CH4 enabled (if RCB_DIS bit is not set)
2	RCB_CH3	R/W	1h	Bit determines the reverse current blocking FET gate control in CH3 0h = Reverse current blocking FET gate pulldown (CH3) is enabled (if RCB_DIS bit is not set) 1h = Reverse current blocking function in CH3 enabled (if RCB_DIS bit is not set)
1	RCB_CH2	R/W	1h	Bit determines the reverse current blocking FET gate control in CH2 0h = Reverse current blocking FET gate pulldown (CH2) is enabled (if RCB_DIS bit is not set) 1h = Reverse current blocking function in CH2 enabled (if RCB_DIS bit is not set)
0	RCB_CH1	R/W	1h	Bit determines the reverse current blocking FET gate control in CH1 0h = Reverse current blocking FET gate pulldown (CH1) is enabled (if RCB_DIS bit is not set) 1h = Reverse current blocking function in CH1 enabled (if RCB_DIS bit is not set)

8.6.39 FAULT_MASK Register (Offset = 27h) [Reset = 00h]

FAULT_MASK is shown in Table 8-52.

Return to the Summary Table.

The register allows masking of certain types of faults.

Table 8-52. FAULT_MASK Register Field Descriptions

Bit	Field	Type	Reset	Description
7	MASK_SPI_ERR	R/W	0h	The bit is set to mask the SPI error (SPI_ERR) signaling in the FLT pin output and FAULT_TYPE_STAT register 0h = SPI error is signaled in FAULT_TYPE_STAT register and FLT pin 1h = FLT pin not impacted by SPI error, but SPI error will be signaled through FAULT_TYPE_STAT register
6	MASK_WD_ERR	R/W	0h	The bit is set to mask the SPI watchdog error (WD_ERR) signaling in the FLT pin output and FAULT_TYPE_STAT register 0h = SPI watchdog error is signaled in FAULT_TYPE_STAT register and FLT pin 1h = FLT pin not impacted by SPI error, but watchdog error will be signaled through FAULT_TYPE_STAT register
5	MASK_ILIMIT	R/W	0h	The bit is set to mask the signaling ILIMIT fault on the FLT pin 0h = Fault is signaled on the FLT pin on current limit occuring 1h = Current limit fault is not signaled (masked from) on the FLT pin
4	MASK_RVRS_BLK	R/W	0h	The bit is set to mask the signaling reverse current fault on the FLT pin 0h = Fault is signaled on the FLT pin on reverse current fault occuring 1h = Reverse current fault is not signaled (masked from) on the FLT pin
3	MASK_SHRT_VS	R/W	0h	The bit is set to mask the signaling off-state Short to VS fault on the FLT pin 0h = Short to VS Fault is signaled on the FLT pin on detecting the fault with the diagnostic 1h = Short to VS fault is not signaled (masked from) on the FLT pin
2	MASK_WB_OFF	R/W	0h	The bit is set to mask the signaling off-state wire-break fault on the FLT pin 0h = Off-state wire-break fault is signaled on the FLT pin on detecting the fault with the diagnostic 1h = Off-state wire-break fault is not signaled (masked from) on the FLT pin
1	MASK_WB_ON	R/W	0h	The bit is set to mask the signaling on-state wire-break fault on the FLT pin 0h = On-state wire-break fault is signaled on the FLT pin on detecting the fault with the diagnostic 1h = On-state wire-break fault is not signaled (masked from) on the FLT pin
0	MASK_VS_UV	R/W	0h	The bit is set to mask the supply voltage VS UV fault signaling on the FLT pin output. 0h = VS UV fault is signaled on the FLT pin on detecting the fault with the diagnostic 1h = VS UV fault is not signaled (masked from) on the FLT pin

8.6.40 EN_WB_OFF Register (Offset = 28h) [Reset = 00h]

EN_WB_OFF is shown in Table 8-53.

Return to the Summary Table.

Enables diagnostic of the wire-break (off-state) faults in the fault registers

Table 8-53. EN_WB_OFF Register Field Descriptions

Bit	Field	Type	Reset	Description
7-4	RESERVED	R	0h	Reserved
3	WB_OFF_CH4_EN	R/W	0h	Set this bit to 1 to enable the wire-break (off-state) fault in CH4 0h = Wire-break (off-state) fault diagnostic in CH4 not enabled 1h = Wire-break (off-state) fault diagnostic in CH4 is enabled

Copyright © 2024 Texas Instruments Incorporated

Table 8-53. EN_WB_OFF Register Field Descriptions (continued)

Bit	Field	Type	Reset	Description
2	WB_OFF_CH3_EN	R/W	0h	Set this bit to 1 to enable the wire-break (off-state) fault in CH3 0h = Wire-break (off-state) fault diagnostic in CH3 not enabled 1h = Wire-break (off-state) fault diagnostic in CH3 is enabled
1	WB_OFF_CH2_EN	R/W	0h	Set this bit to 1 to enable the wire-break (off-state) fault in CH2 0h = Wire-break (off-state) fault diagnostic in CH2 not enabled 1h = Wire-break (off-state) fault diagnostic in CH2 is enabled
0	WB_OFF_CH1_EN	R/W	0h	Set this bit to 1 to enable the wire-break (off-state) fault in CH1 0h = Wire-break (off-state) fault diagnostic in CH1 not enabled 1h = Wire-break (off-state) fault diagnostic in CH1 is enabled

8.6.41 EN_WB_ON Register (Offset = 29h) [Reset = 00h]

EN_WB_ON is shown in Table 8-54.

Return to the Summary Table.

The register allows masking of On-state Wire-break fault per channel

Table 8-54. EN_WB_ON Register Field Descriptions

Bit	Field	Type	Reset	Description
7-4	RESERVED	R	0h	Reserved
3	WB_ON_CH4_EN	R/W	0h	Set this bit to 1 to enable the wire-break (off-state) fault diagnostic in CH4 0h = Wire-break (off-state) fault diagnostic in CH4 not enabled 1h = Wire-break (off-state) fault diagnostic in CH4 is enabled
2	WB_ON_CH3_EN	R/W	0h	Set this bit to 1 to enable the wire-break (off-state) fault diagnostic in CH3 0h = Wire-break (off-state) fault diagnostic in CH3 not enabled 1h = Wire-break (off-state) fault diagnostic in CH3 is enabled
1	WB_ON_CH2_EN	R/W	0h	Set this bit to 1 to enable the wire-break (off-state) fault diagnostic in CH2 0h = Wire-break (off-state) fault diagnostic in CH2 not enabled 1h = Wire-break (off-state) fault diagnostic in CH2 is enabled
0	WB_ON_CH1_EN	R/W	0h	Set this bit to 1 to enable the wire-break (off-state) fault diagnostic in CH1 0h = Wire-break (off-state) fault diagnostic in CH1 not enabled 1h = Wire-break (off-state) fault diagnostic in CH1 is enabled

8.6.42 EN_SHRT_VS Register (Offset = 2Ah) [Reset = 00h]

EN_SHRT_VS is shown in Table 8-55.

Return to the Summary Table.

The register allows masking of output short to supply (VS) fault per channel

Table 8-55. EN_SHRT_VS Register Field Descriptions

Bit	Field	Type	Reset	Description
7-4	RESERVED	R	0h	Reserved
3	SHRT_VS_CH4_EN	R/W	0h	Set this bit to 1 to enable the short_to_VS (off-state) fault diagnostic in CH4 0h = short_to_VS (off-state) fault diagnostic in CH4 not enabled 1h = short_to_VS (off-state) fault diagnostic in CH4 enabled
2	SHRT_VS_CH3_EN	R/W	0h	Set this bit to 1 to enable the short_to_VS (off-state) fault diagnostic in CH3 0h = short_to_VS (off-state) fault diagnostic in CH3 not enabled 1h = short_to_VS (off-state) fault diagnostic in CH3 enabled

Copyright © 2024 Texas Instruments Incorporated

Table 8-55. EN_SHRT_VS Register Field Descriptions (continued)

Bit	Field	Type	Reset	Description
1	SHRT_VS_CH2_EN	R/W	0h	Set this bit to 1 to enable the short_to_VS (off-state) fault diagnostic in CH2 0h = short_to_VS (off-state) fault diagnostic in CH2 not enabled 1h = short_to_VS (off-state) fault diagnostic in CH2 enabled
0	SHRT_VS_CH1_EN	R/W	0h	Set this bit to 1 to enable the short_to_VS (off-state) fault diagnostic in CH1 0h = short_to_VS (off-state) fault diagnostic in CH1 not enabled 1h = short_to_VS (off-state) fault diagnostic in CH1 enabled

8.6.43 ADC_ISNS_DIS Register (Offset = 2Bh) [Reset = 00h]

ADC_ISNS_DIS is shown in Table 8-56.

Return to the Summary Table.

Allows disabling the ADC conversion of ISNS on a per channel basis

Table 8-56. ADC_ISNS_DIS Register Field Descriptions

Bit	Field	Type	Reset	Description
7-4	RESERVED	R	0h	Reserved
3	ISNS_DIS_CH4	R/W	0h	Set this bit to 1 disable ISNS_CH4 conversion 0h = ISNS_CH4 ADC conversion included 1h = ISNS_CH4 ADC conversion disabled
2	ISNS_DIS_CH3	R/W	0h	Set this bit to 1 disable ISNS_CH3 conversion 0h = ISNS_CH3 ADC conversion included 1h = ISNS_CH3 ADC conversion disabled
1	ISNS_DIS_CH2	R/W	0h	Set this bit to 1 disable ISNS_CH2 conversion 0h = ISNS_CH2 ADC conversion included 1h = ISNS_CH2 ADC conversion disabled
0	ISNS_DIS_CH1	R/W	0h	Set this bit to 1 disable ISNS_CH1 conversion 0h = ISNS_CH1 ADC conversion included 1h = ISNS_CH1 ADC conversion disabled

8.6.44 ADC_TSNS_DIS Register (Offset = 2Ch) [Reset = 00h]

ADC_TSNS_DIS is shown in Table 8-57.

Return to the Summary Table.

Allows disabling the ADC conversion of TSNS on a per channel basis

Table 8-57. ADC_TSNS_DIS Register Field Descriptions

Bit	Field	Type	Reset	Description
7-4	RESERVED	R	0h	Reserved
3	TSNS_DIS_CH4	R/W	0h	Set this bit to 1 disable TSNS_CH4 conversion 0h = TSNS_CH4 ADC conversion included 1h = TSNS_CH4 ADC conversion disabled
2	TSNS_DIS_CH3	R/W	0h	Set this bit to 1 disable TSNS_CH3 conversion 0h = TSNS_CH3 ADC conversion included 1h = TSNS_CH3 ADC conversion disabled
1	TSNS_DIS_CH2	R/W	0h	Set this bit to 1 disable TSNS_CH2 conversion 0h = TSNS_CH2 ADC conversion included 1h = TSNS_CH2 ADC conversion disabled
0	TSNS_DIS_CH1	R/W	0h	Set this bit to 1 disable TSNS_CH1 conversion 0h = TSNS_CH1 ADC conversion included 1h = TSNS_CH1 ADC conversion disabled

Copyright © 2024 Texas Instruments Incorporated

8.6.45 ADC_VSNS_DIS Register (Offset = 2Dh) [Reset = 00h]

ADC_VSNS_DIS is shown in Table 8-58.

Return to the Summary Table.

Allows disabling the ADC conversion of VSNS on a per channel basis

Table 8-58. ADC_VSNS_DIS Register Field Descriptions

Bit	Field	Type	Reset	Description
7-4	RESERVED	R	0h	Reserved
3	VSNS_DIS_CH4	R/W	0h	Set this bit to 1 disable VSNS_CH4 conversion 0h = VSNS_CH4 ADC conversion included 1h = VSNS_CH4 ADC conversion disabled
2	VSNS_DIS_CH3	R/W	0h	Set this bit to 1 disable VSNS_CH3 conversion 0h = VSNS_CH3 ADC conversion included 1h = VSNS_CH3 ADC conversion disabled
1	VSNS_DIS_CH2	R/W	0h	Set this bit to 1 disable VSNS_CH2 conversion 0h = VSNS_CH2 ADC conversion included 1h = VSNS_CH2 ADC conversion disabled
0	VSNS_DIS_CH1	R/W	0h	Set this bit to 1 disable VSNS_CH1 conversion 0h = VSNS_CH1 ADC conversion included 1h = VSNS_CH1 ADC conversion disabled

8.6.46 ADC_CONFIG1 Register (Offset = 2Eh) [Reset = 00h]

ADC_CONFIG1 is shown in Table 8-59.

Return to the Summary Table.

ADC configuration - disable conversion of measurements not needed.

Table 8-59. ADC_CONFIG1 Register Field Descriptions

Bit	Field	Type	Reset	Description
7-4	RESERVED	R	0h	Reserved
3	ADC_TSNS_DIS	R/W	0h	Set this bit to 1 to disable the ADC TSNS functionality 0h = TSNS ADC functionality enabled 1h = TSNS ADC functionality is disabled
2	ADC_VSNS_DIS	R/W	0h	Set this bit to 1 to disable the VSNS ADC functionality 0h = VSNS ADC functionality enabled 1h = VSNS ADC functionality is disabled
1	ADC_ISNS_DIS	R/W	0h	Set this bit to 1 to disable ISNS ADC functionality 0h = ISNS ADC functionality enabled 1h = ISNS ADC functionality is disabled
0	ADC_VS_DIS	R/W	0h	Set this bit to 1 to disable supply voltage V_VS conversion in the ADC conversion sequence. 0h = Include supply voltage V_VS conversion in the sequence 1h = No conversion of suppy voltage V_VS

8.6.47 CRC_CONFIG Register (Offset = 2Fh) [Reset = 00h]

CRC_CONFIG is shown in Table 8-60.

Return to the Summary Table.

Configure CRC

Table 8-60. CRC_CONFIG Register Field Descriptions

Bit	Field	Type	Reset	Description
7-2	RESERVED	R	0h	Reserved

Copyright © 2024 Texas Instruments Incorporated

Table 8-60. CRC_CONFIG Register Field Descriptions (continued)

Bit	Field	Type	Reset	Description
1	D24BIT	R/W	0h	Set this bit to 1 to use 24-bit SPI command frame in daisy chain mode 0h = 16-bit frame and No CRC check of SPI command frame 1h = 24-bit frame with the possibility of CRC check
0	CRC_EN	R/W	0h	Set this bit to 1 to enable CRC check of SPI command frame. 0h = No CRC check of SPI command frame 1h = CRC check of SPI command frame enabled

Copyright © 2024 Texas Instruments Incorporated

9 Application and Implementation

Note

Information in the following applications sections is not part of the TI component specification, and TI does not warrant its accuracy or completeness. TI's customers are responsible for determining suitability of components for their purposes, as well as validating and testing their design implementation to confirm system functionality.

9.1 Application Information

The following sections give examples of typical implementation and design examples.

9.2 Typical Application

Figure 9-1 shows the schematic of a typical application of the TPS274C65. The schematic includes all standard external components. This section of the data sheet discusses the considerations in implementing commonly required application functionality.

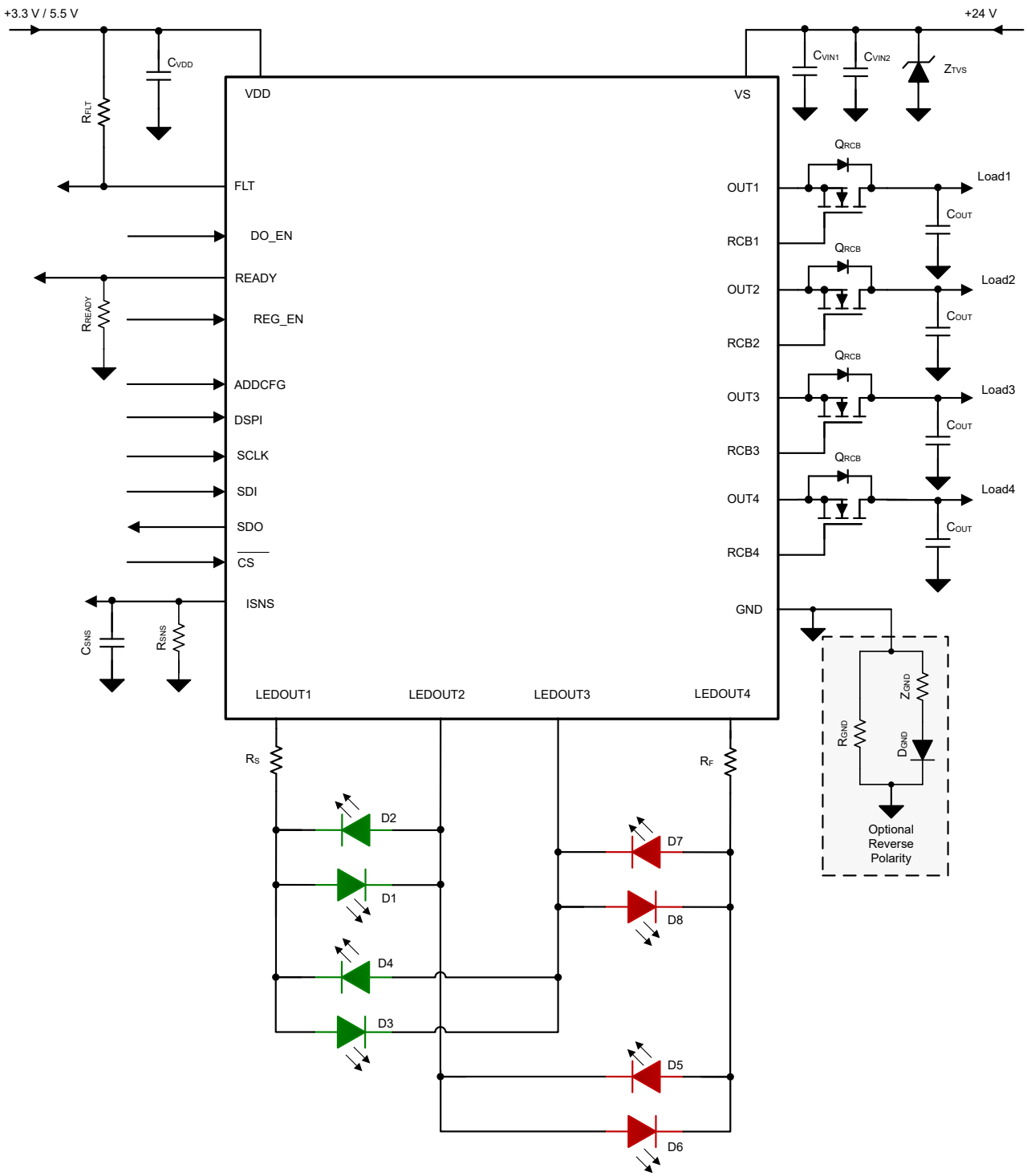

Figure 9-1. Typical Application Circuit

Copyright © 2024 Texas Instruments Incorporated

9.2.1 Design Requirements

Table 9-1. Recommended External Components

COMPONENT	TYPICAL VALUE	PURPOSE
R_{SNS}	1 kΩ	Translate the sense current into sense voltage.
C_{SNS}	100 pF	Low-pass filter for the ADC input.
R_{ILIMx}	5 kΩ to 80 kΩ	Set current limit threshold, connect from pin to IC GND.
C_{Vin1}	4.7 nF to Device GND	Filtering of voltage transients (for example, ESD, IEC 61000-4-5) and improved emissions.
C_{Vin2}	100 nF to Module GND	Stabilize the input supply and filter out low frequency noise.
C_{VDD}	2.2 µF to Module GND	Stabilize the VDD supply and limit supply excursions. Needed with either external or internal VDD supplies.
C_{OUT}	22 nF	Filtering of voltage transients (for example, ESD, RF transients).
Z_{TVS}	36-V TVS	Clamp surge voltages at the supply input.
D_{GND}, Z_{GND}	Diode + max 10 Ω from Device GND to Module GND	Optional for reverse polarity protection - if needed. Series resistor needed for surge events.
R_{GND}	4.7 kΩ	Stabilize IC GND in the event of negative output swings.
Q_{RCB}	20-nC FET	Optional for Reverse current blocking.
R_S	490 Ω	Limiting the current flowing through the LEDs.
R_F	490 Ω	Limiting the current flowing through the LEDs.

9.2.2 Detailed Design Procedure

In an example application with maximum load current of 500 mA, the current limit must be set to an acceptable level. With the current limit variation and tolerance allowed for this specific application, the current limit setting of 1 A is chosen. Referring back to the Table 8-4, ILIM_REG[3:0] must be set to 0x8 through SPI.

Depending on the tolerance on the maximum current for the application, the current limit resistor can be chosen to leave the overhead needed before the current limit engages.

9.2.2.1 IEC 61000-4-5 Surge

The TPS274C65 is designed to survive against IEC 61000-4-5 surge using external TVS clamps. The device is rated to 48 V ensuring that external TVS diodes can clamp below the rated maximum voltage of the TPS274C65. Above 48V, the device includes V_{DS} clamps to help shunt current and ensure that the device will survive the transient pulses. Depending on the class of the output, it is recommend that the system has a SMBJ36A or SMCJ36A between VS and module GND.

9.2.2.2 Loss of GND

The ground connection may be lost either on the device level or on the module level. If the ground connection is lost, both the channel outputs will be disabled irrespective of the EN input level. If the switch was already disabled when the ground connection was lost, the outputs will remain disabled even when the channels are enabled. The steady state current from the output to the load that remains connected to the system ground is below the level specified in the *Specifications* section of this document. When the ground is reconnected, normal operation will resume.

9.2.2.3 Paralleling Channels

If an application requires lower power dissipation than is possible with a 65 mΩ switch, the TPS274C65 can have up to two channel outputs (CH1 and CH2 OR CH3 and CH4) tied together to function as a single 32.5 mΩ high side switch. In this case, there will be some decrease in I_{SNS} and I_{LIM} accuracy, however the device will function properly. The max continuous load current per channel while channels are paralleled is defined in *Electrical Characteristics*.

9.2.3 Application Curves

Figure 9-2 shows a test example of switching the load with 250-kHz PWM signal. Test conditions: VS =12 V, Duty Cycle = 5%, T_{AMB} = 25°C. Channel 1 is V_{OUT} voltage. Channel 2 is EN pin voltage. Channel 3 is VS voltage. Channel 4 is VS current.

Figure 9-3 shows a test example of enabling a switch while there is a short at the output. Test conditions: VS = 24 V, T_{AMB} = 25°C. Channel 1 is V_{OUT} voltage. Channel 2 is $\overline{FAULT}$ pin voltage. Channel 3 is VS voltage. Channel 4 is VS current.

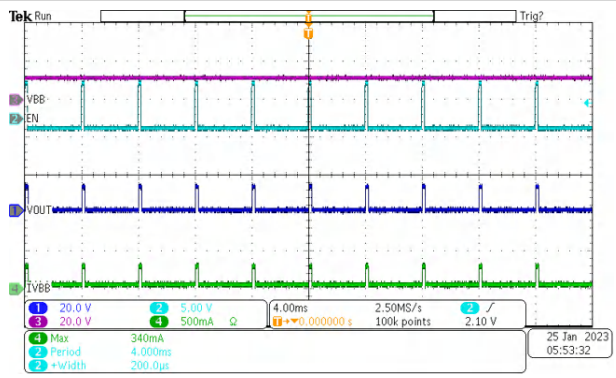

Figure 9-2. 250-kHz PWM Switching

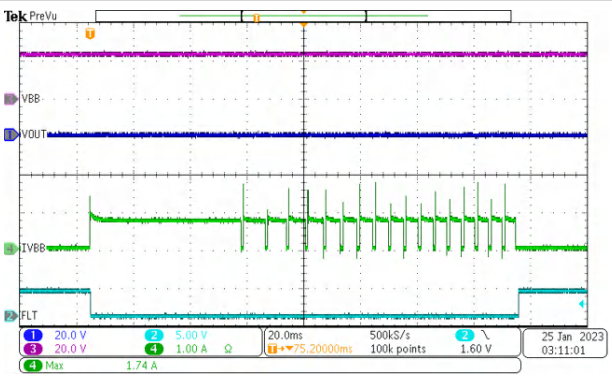

Figure 9-3. Enable into Short Circuit

9.3 Power Supply Recommendations

Table 9-2. Operating Voltage Range

V_S Voltage Range	Note
6 V to 36 V	Nominal supply voltage, all parametric specifications apply. The device is completely short-circuit protected up to 125°C
36 V to 48 V	Functional operation per data sheet (switch can turn-off), but can not meet parametric specifications.

9.4 Layout

9.4.1 Layout Guidelines

To prevent thermal shutdown, T_J must be less than T_{ABS}. If the output current is very high, the power dissipation can be large. The VQFN package has good thermal impedance. However, the PCB layout is very important. Good PCB design can optimize heat transfer, which is absolutely essential for the long-term reliability of the device.

1. Maximize the copper coverage on the PCB to increase the thermal conductivity of the board. The major heat-flow path from the package to the ambient is through the copper on the PCB. Maximum copper is extremely important when there are not any heat sinks attached to the PCB on the other side of the board opposite the package.
2. Add as many thermal vias as possible directly under the package ground pad to optimize the thermal conductivity of the board
3. Plate shut or plug and cap all thermal vias on both sides of the board to prevent solder voids. To ensure reliability and performance, the solder coverage must be at least 85%.

Copyright © 2024 Texas Instruments Incorporated

9.4.2 Layout Example

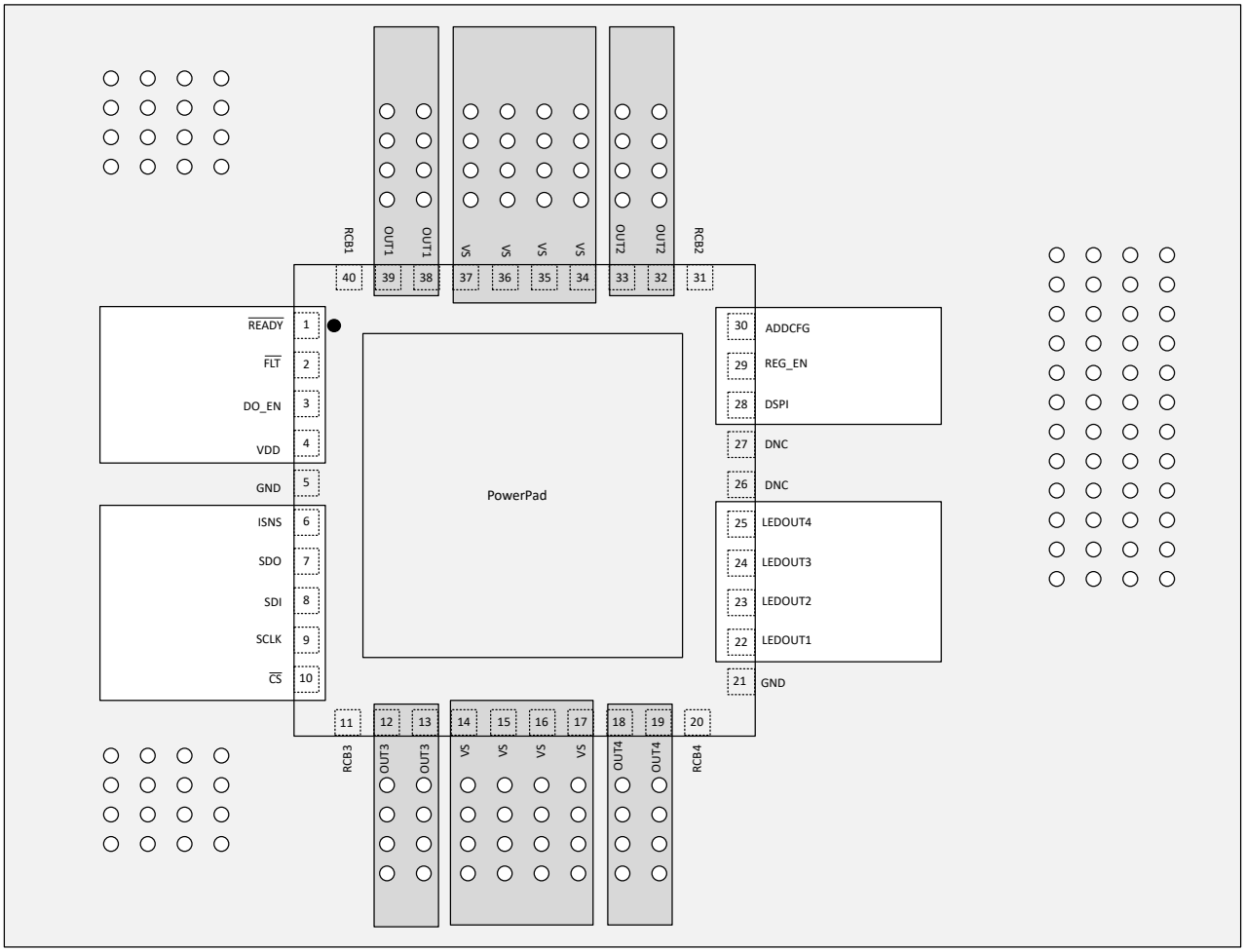

Figure 9-4. Layout Example

10 Device and Documentation Support

10.1 Receiving Notification of Documentation Updates

To receive notification of documentation updates, navigate to the device product folder on ti.com. Click on *Notifications* to register and receive a weekly digest of any product information that has changed. For change details, review the revision history included in any revised document.

10.2 Support Resources

TI E2E™ support forums are an engineer's go-to source for fast, verified answers and design help — straight from the experts. Search existing answers or ask your own question to get the quick design help you need.

Linked content is provided "AS IS" by the respective contributors. They do not constitute TI specifications and do not necessarily reflect TI's views; see TI's Terms of Use.

10.3 Trademarks

TI E2E™ is a trademark of Texas Instruments.
All trademarks are the property of their respective owners.

10.4 Electrostatic Discharge Caution

This integrated circuit can be damaged by ESD. Texas Instruments recommends that all integrated circuits be handled with appropriate precautions. Failure to observe proper handling and installation procedures can cause damage.

ESD damage can range from subtle performance degradation to complete device failure. Precision integrated circuits may be more susceptible to damage because very small parametric changes could cause the device not to meet its published specifications.

10.5 Glossary

TI Glossary	This glossary lists and explains terms, acronyms, and definitions.

11 Revision History

NOTE: Page numbers for previous revisions may differ from page numbers in the current version.

Changes from Revision B (October 2023) to Revision C (February 2024)	Page
• Updated *Device Comparison Table* section to include the H version	3
• Updated *Electrical Characteristics* section to include the current limit for H version devices	7
• Updated *Inductive Load Demagnetization* section to include the discharge capability	32

Changes from Revision A (October 2023) to Revision B (October 2023)	Page
• Changed VS and VOUT pins HBM ESD levels from 4 kV to 2 kV in the *ESD Ratings* section	7

Copyright © 2024 Texas Instruments Incorporated

12 Mechanical, Packaging, and Orderable Information

The following pages include mechanical, packaging, and orderable information. This information is the most current data available for the designated devices. This data is subject to change without notice and revision of this document. For browser-based versions of this data sheet, refer to the left-hand navigation.

PACKAGING INFORMATION

Orderable part number	Status (1)	Material type (2)	Package | Pins	Package qty | Carrier	RoHS (3)	Lead finish/ Ball material (4)	MSL rating/ Peak reflow (5)	Op temp (°C)	Part marking (6)
TPS274C65ASHRHAR	Active	Production	VQFN (RHA) | 40	2500 | LARGE T&R	Yes	NIPDAU	Level-2-260C-1 YEAR	-40 to 125	TPS274C65ASHRHA
TPS274C65ASHRHAR.A	Active	Production	VQFN (RHA) | 40	2500 | LARGE T&R	Yes	NIPDAU	Level-2-260C-1 YEAR	-40 to 125	TPS274C65ASHRHA
TPS274C65ASHWRHAR	Active	Production	VQFN (RHA) | 40	2500 | LARGE T&R	Yes	NIPDAU	Level-2-260C-1 YEAR	-40 to 125	TPS274C65ASHWRHA
TPS274C65ASHWRHAR.A	Active	Production	VQFN (RHA) | 40	2500 | LARGE T&R	Yes	NIPDAU	Level-2-260C-1 YEAR	-40 to 125	TPS274C65ASHWRHA
TPS274C65ASRHAR	Active	Production	VQFN (RHA) | 40	2500 | LARGE T&R	Yes	NIPDAU	Level-2-260C-1 YEAR	-40 to 125	TPS274C65ASRHA
TPS274C65ASRHAR.A	Active	Production	VQFN (RHA) | 40	2500 | LARGE T&R	Yes	NIPDAU	Level-2-260C-1 YEAR	-40 to 125	TPS274C65ASRHA
TPS274C65ASWRHAR	Active	Production	VQFN (RHA) | 40	2500 | LARGE T&R	Yes	NIPDAU	Level-2-260C-1 YEAR	-40 to 125	TPS274C65ASWRHA
TPS274C65ASWRHAR.A	Active	Production	VQFN (RHA) | 40	2500 | LARGE T&R	Yes	NIPDAU	Level-2-260C-1 YEAR	-40 to 125	TPS274C65ASWRHA
TPS274C65BSRHAR	Active	Production	VQFN (RHA) | 40	2500 | LARGE T&R	Yes	NIPDAU	Level-2-260C-1 YEAR	-40 to 125	TPS274C65BSRHA
TPS274C65BSRHAR.A	Active	Production	VQFN (RHA) | 40	2500 | LARGE T&R	Yes	NIPDAU	Level-2-260C-1 YEAR	-40 to 125	TPS274C65BSRHA
TPS274C65BSWRHAR	Active	Production	VQFN (RHA) | 40	2500 | LARGE T&R	Yes	NIPDAU	Level-2-260C-1 YEAR	-40 to 125	TPS274C65BSWRHA
TPS274C65BSWRHAR.A	Active	Production	VQFN (RHA) | 40	2500 | LARGE T&R	Yes	NIPDAU	Level-2-260C-1 YEAR	-40 to 125	TPS274C65BSWRHA

(1) **Status:** For more details on status, see our product life cycle.

(2) **Material type:** When designated, preproduction parts are prototypes/experimental devices, and are not yet approved or released for full production. Testing and final process, including without limitation quality assurance, reliability performance testing, and/or process qualification, may not yet be complete, and this item is subject to further changes or possible discontinuation. If available for ordering, purchases will be subject to an additional waiver at checkout, and are intended for early internal evaluation purposes only. These items are sold without warranties of any kind.

(3) **RoHS values:** Yes, No, RoHS Exempt. See the TI RoHS Statement for additional information and value definition.

(4) **Lead finish/Ball material:** Parts may have multiple material finish options. Finish options are separated by a vertical ruled line. Lead finish/Ball material values may wrap to two lines if the finish value exceeds the maximum column width.

(5) **MSL rating/Peak reflow:** The moisture sensitivity level ratings and peak solder (reflow) temperatures. In the event that a part has multiple moisture sensitivity ratings, only the lowest level per JEDEC standards is shown. Refer to the shipping label for the actual reflow temperature that will be used to mount the part to the printed circuit board.

(6) **Part marking:** There may be an additional marking, which relates to the logo, the lot trace code information, or the environmental category of the part.

Multiple part markings will be inside parentheses. Only one part marking contained in parentheses and separated by a "~" will appear on a part. If a line is indented then it is a continuation of the previous line and the two combined represent the entire part marking for that device.

Important Information and Disclaimer: The information provided on this page represents TI's knowledge and belief as of the date that it is provided. TI bases its knowledge and belief on information provided by third parties, and makes no representation or warranty as to the accuracy of such information. Efforts are underway to better integrate information from third parties. TI has taken and continues to take reasonable steps to provide representative and accurate information but may not have conducted destructive testing or chemical analysis on incoming materials and chemicals. TI and TI suppliers consider certain information to be proprietary, and thus CAS numbers and other limited information may not be available for release.

In no event shall TI's liability arising out of such information exceed the total purchase price of the TI part(s) at issue in this document sold by TI to Customer on an annual basis.

TAPE AND REEL INFORMATION

REEL DIMENSIONS

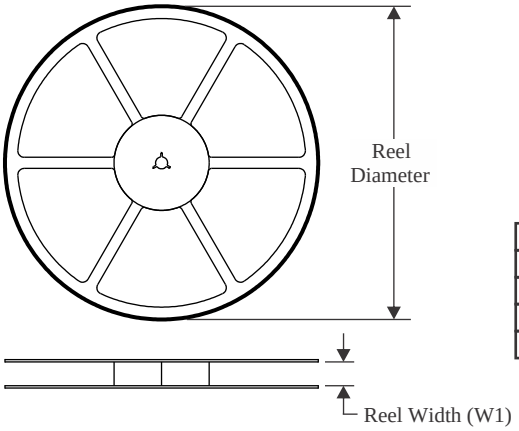

TAPE DIMENSIONS

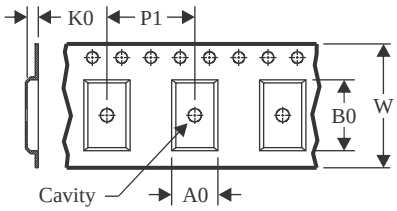

A0	Dimension designed to accommodate the component width
B0	Dimension designed to accommodate the component length
K0	Dimension designed to accommodate the component thickness
W	Overall width of the carrier tape
P1	Pitch between successive cavity centers

QUADRANT ASSIGNMENTS FOR PIN 1 ORIENTATION IN TAPE

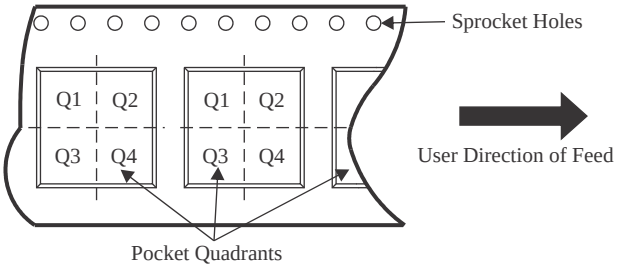

*All dimensions are nominal

Device	Package Type	Package Drawing	Pins	SPQ	Reel Diameter (mm)	Reel Width W1 (mm)	A0 (mm)	B0 (mm)	K0 (mm)	P1 (mm)	W (mm)	Pin1 Quadrant
TPS274C65ASHRHAR	VQFN	RHA	40	2500	330.0	16.4	6.3	6.3	1.1	12.0	16.0	Q2
TPS274C65ASHWRHAR	VQFN	RHA	40	2500	330.0	16.4	6.3	6.3	1.1	12.0	16.0	Q2
TPS274C65ASRHAR	VQFN	RHA	40	2500	330.0	16.4	6.3	6.3	1.1	12.0	16.0	Q2
TPS274C65ASWRHAR	VQFN	RHA	40	2500	330.0	16.4	6.3	6.3	1.1	12.0	16.0	Q2
TPS274C65BSRHAR	VQFN	RHA	40	2500	330.0	16.4	6.3	6.3	1.1	12.0	16.0	Q2
TPS274C65BSWRHAR	VQFN	RHA	40	2500	330.0	16.4	6.3	6.3	1.1	12.0	16.0	Q2

TAPE AND REEL BOX DIMENSIONS

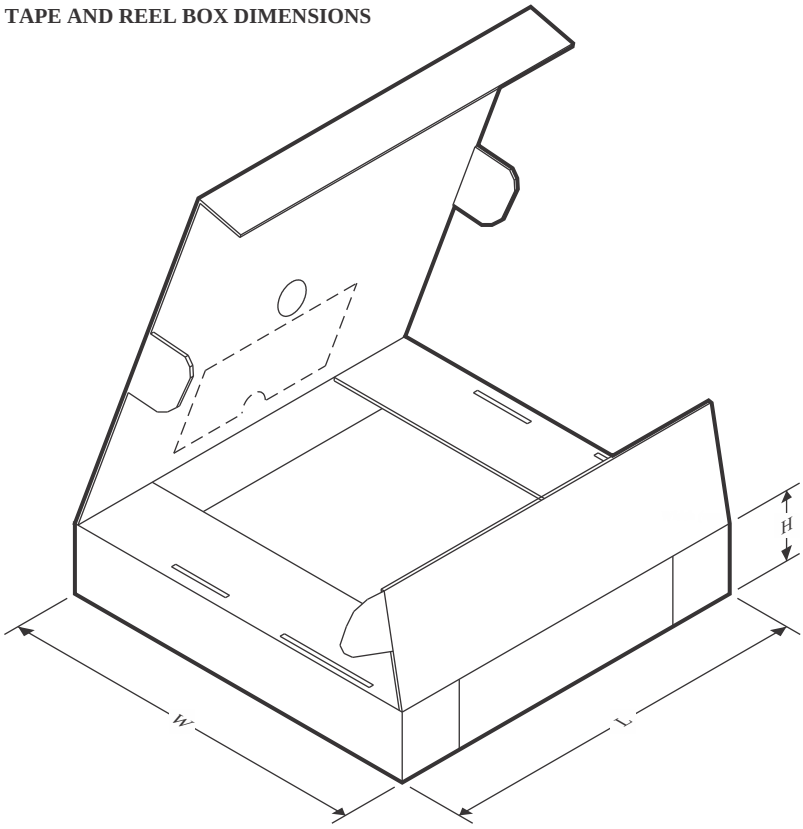

*All dimensions are nominal

Device	Package Type	Package Drawing	Pins	SPQ	Length (mm)	Width (mm)	Height (mm)
TPS274C65ASHRHAR	VQFN	RHA	40	2500	360.0	360.0	36.0
TPS274C65ASHWRHAR	VQFN	RHA	40	2500	367.0	367.0	35.0
TPS274C65ASRHAR	VQFN	RHA	40	2500	360.0	360.0	36.0
TPS274C65ASWRHAR	VQFN	RHA	40	2500	360.0	360.0	36.0
TPS274C65BSRHAR	VQFN	RHA	40	2500	360.0	360.0	36.0
TPS274C65BSWRHAR	VQFN	RHA	40	2500	360.0	360.0	36.0

GENERIC PACKAGE VIEW

RHA 40

VQFN - 1 mm max height

6 x 6, 0.5 mm pitch

PLASTIC QUAD FLATPACK - NO LEAD

This image is a representation of the package family, actual package may vary.
Refer to the product data sheet for package details.

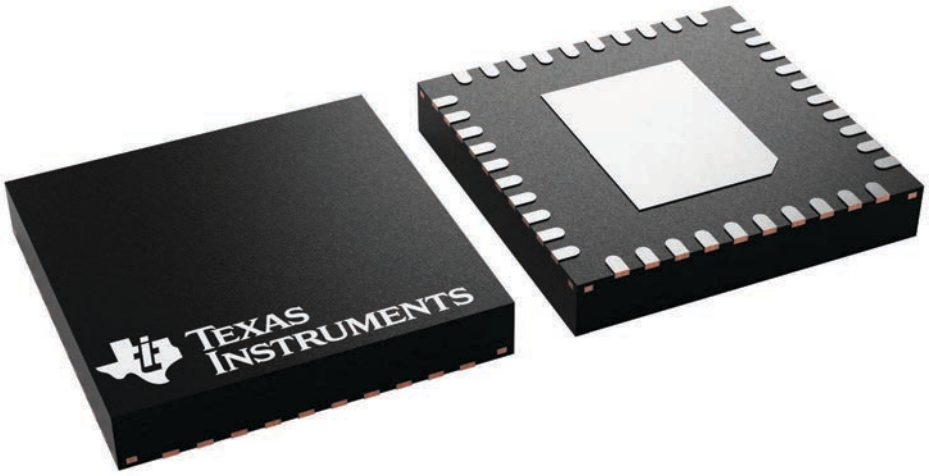

4225870/A

PACKAGE OUTLINE

RHA0040B

VQFN - 1 mm max height

PLASTIC QUAD FLATPACK - NO LEAD

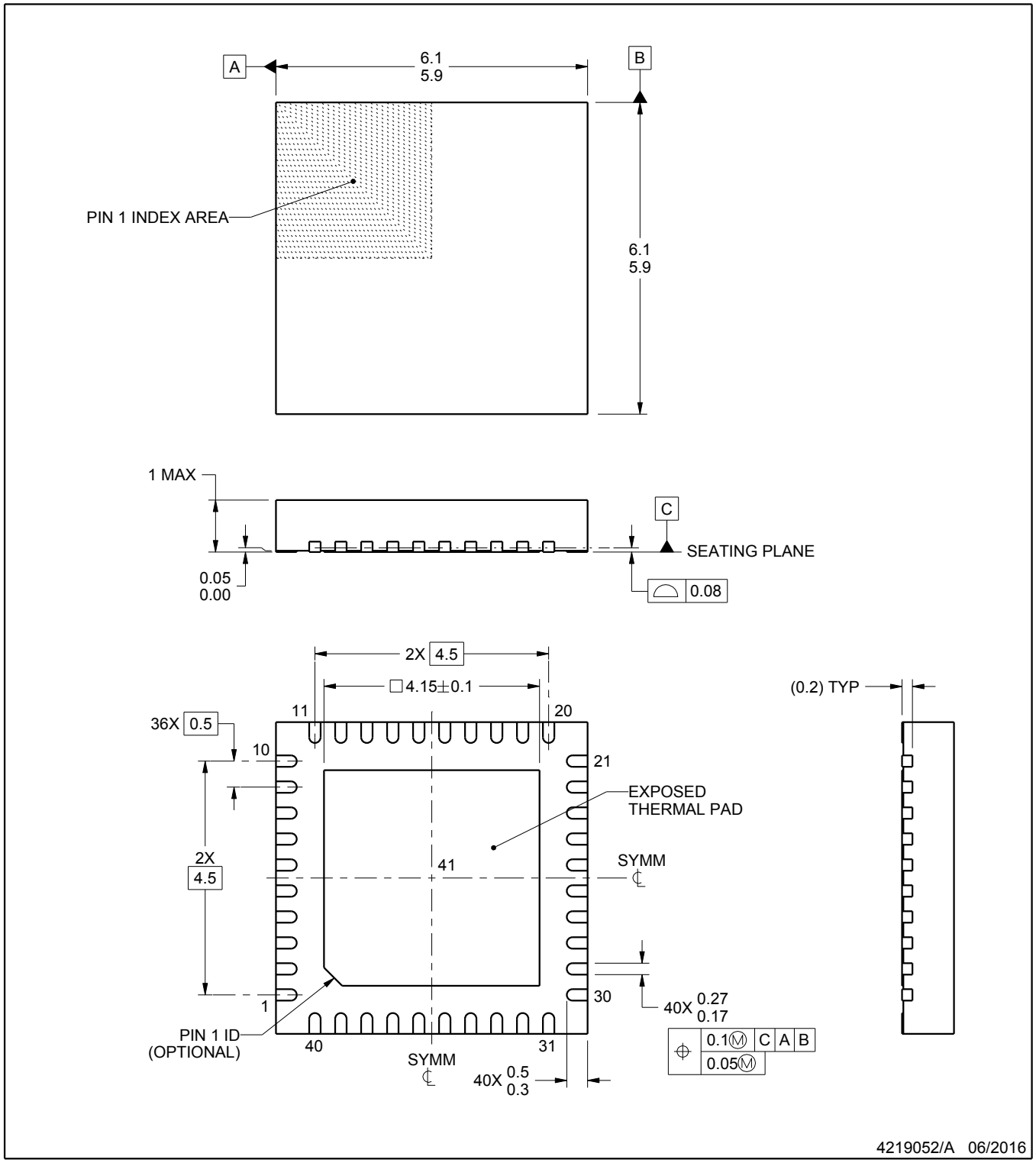

NOTES:

1. All linear dimensions are in millimeters. Any dimensions in parenthesis are for reference only. Dimensioning and tolerancing per ASME Y14.5M.
2. This drawing is subject to change without notice.
3. The package thermal pad must be soldered to the printed circuit board for thermal and mechanical performance.

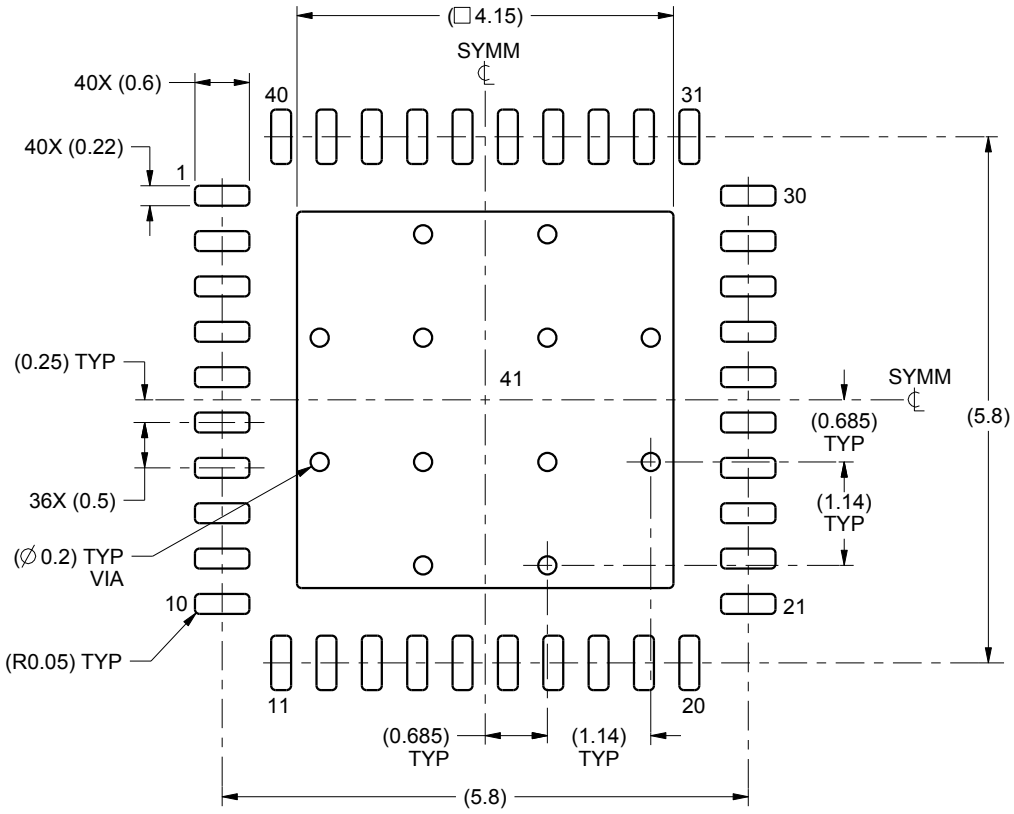

LAND PATTERN EXAMPLE
SCALE:12X

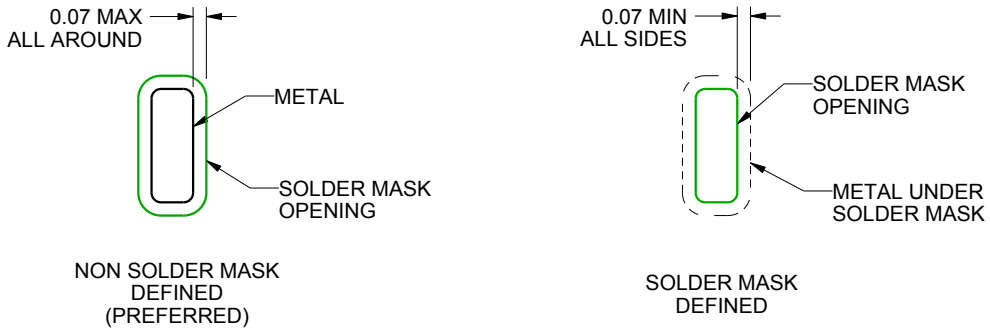

SOLDER MASK DETAILS

4219052/A 06/2016

NOTES: (continued)

4. This package is designed to be soldered to a thermal pad on the board. For more information, see Texas Instruments literature number SLUA271 (www.ti.com/lit/slua271).

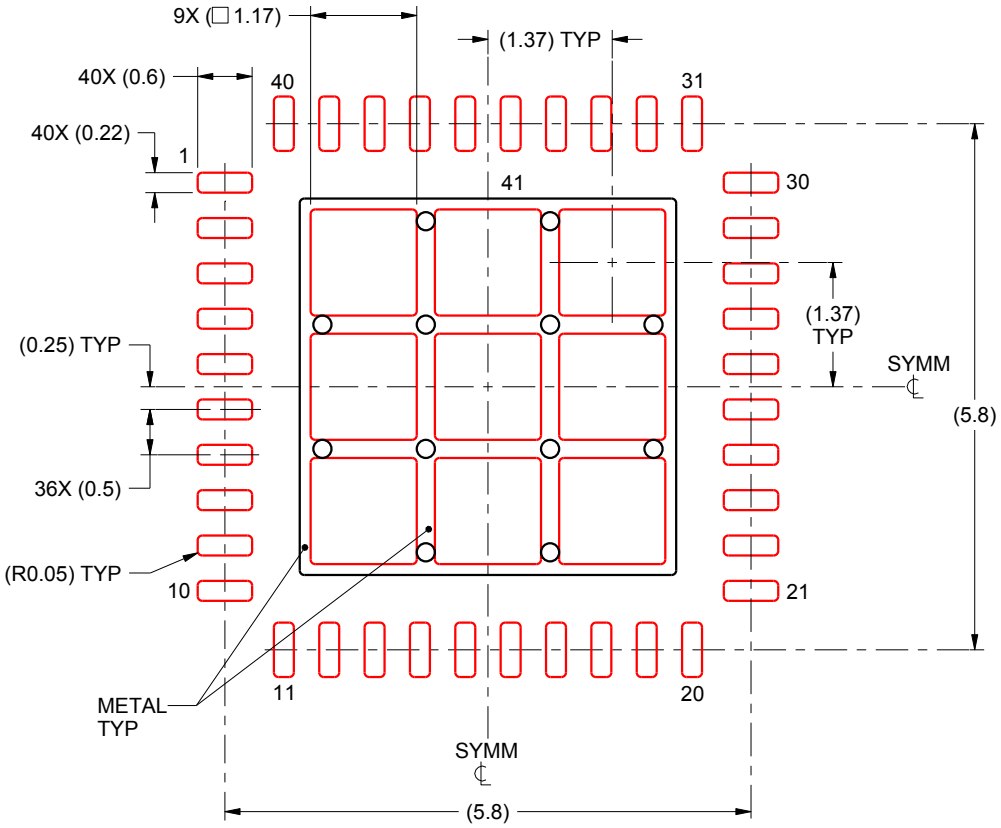

SOLDER PASTE EXAMPLE
BASED ON 0.125 mm THICK STENCIL

EXPOSED PAD 41:
72% PRINTED SOLDER COVERAGE BY AREA UNDER PACKAGE
SCALE:12X

4219052/A 06/2016

NOTES: (continued)

5. Laser cutting apertures with trapezoidal walls and rounded corners may offer better paste release. IPC-7525 may have alternate design recommendations.

PACKAGE OUTLINE

RHA0040M

VQFN - 1 mm max height

PLASTIC QUAD FLATPACK - NO LEAD

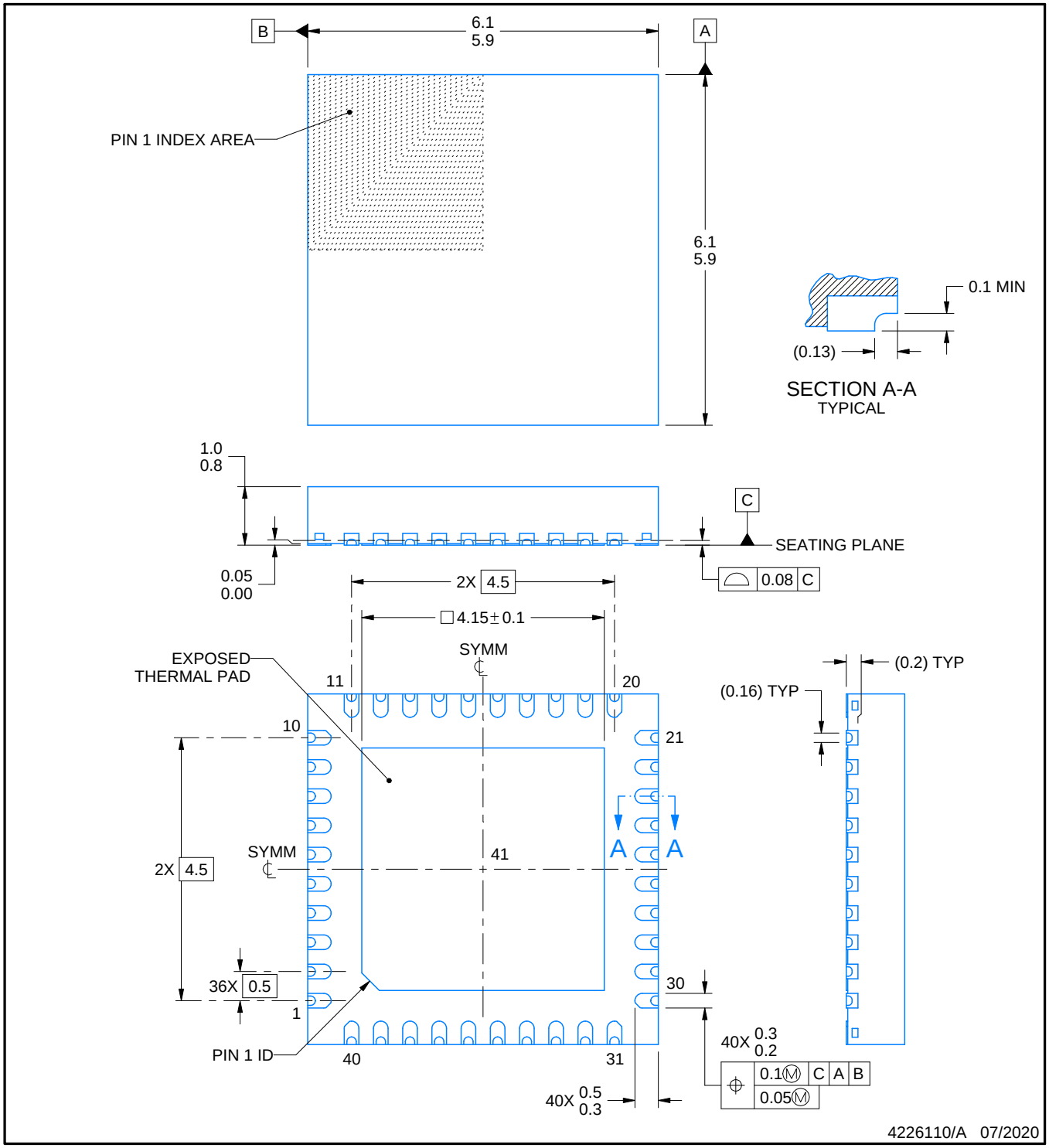

NOTES:

1. All linear dimensions are in millimeters. Any dimensions in parenthesis are for reference only. Dimensioning and tolerancing per ASME Y14.5M.
2. This drawing is subject to change without notice.
3. The package thermal pad must be soldered to the printed circuit board for thermal and mechanical performance.

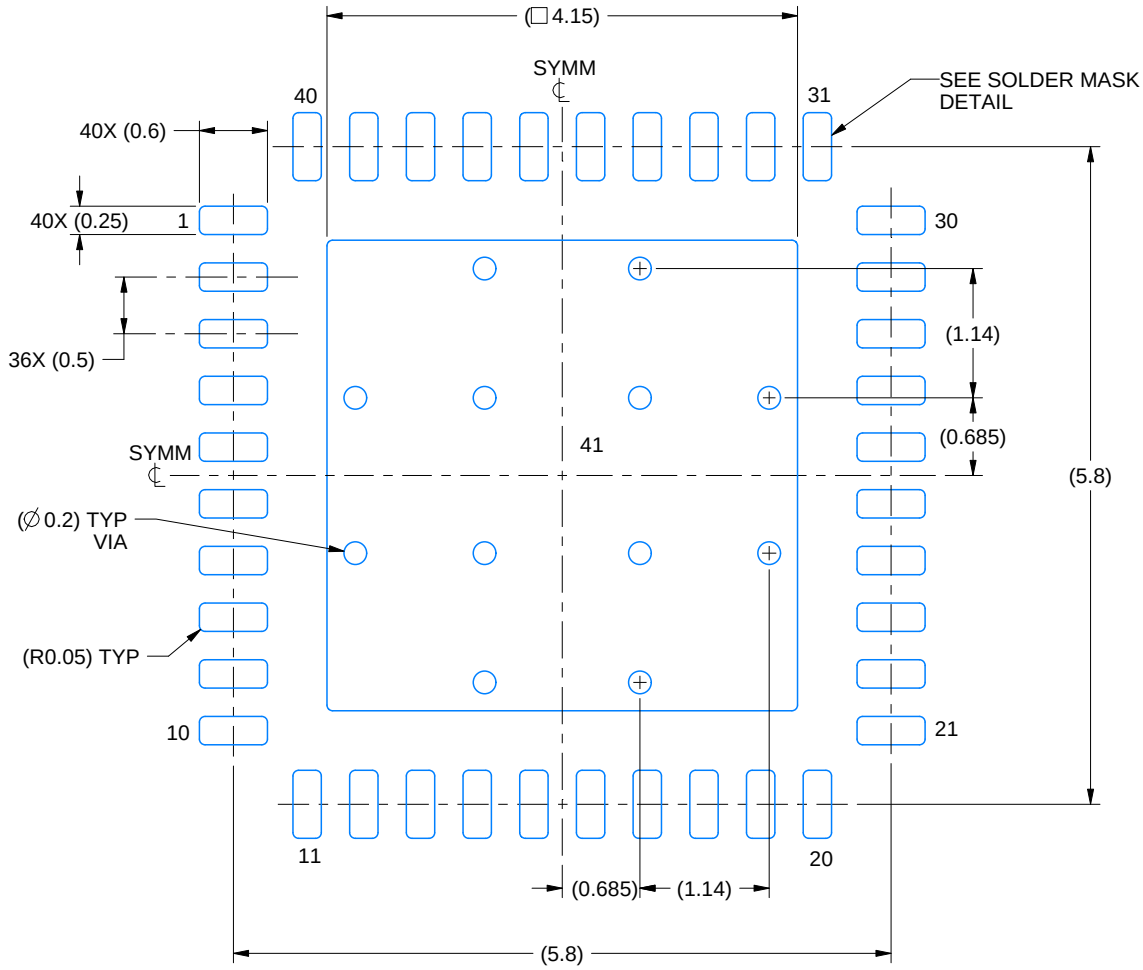

LAND PATTERN EXAMPLE
EXPOSED METAL SHOWN
SCALE: 15X

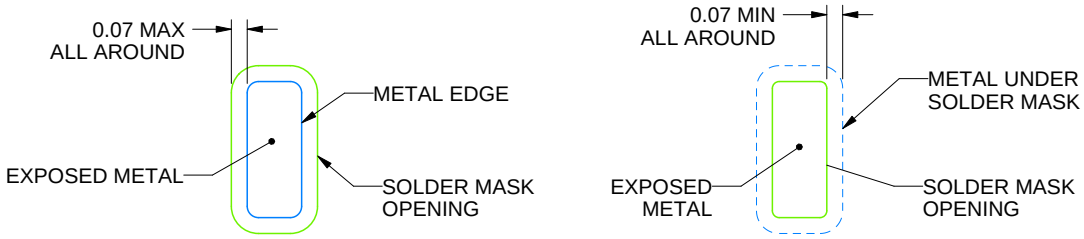

NON SOLDER MASK DEFINED (PREFERRED)

SOLDER MASK DEFINED

SOLDER MASK DETAILS

4226110/A 07/2020

NOTES: (continued)

4. This package is designed to be soldered to a thermal pad on the board. For more information, see Texas Instruments literature number SLUA271 (www.ti.com/lit/slua271).
5. Vias are optional depending on application, refer to device data sheet. If any vias are implemented, refer to their locations shown on this view. It is recommended that vias under paste be filled, plugged or tented.

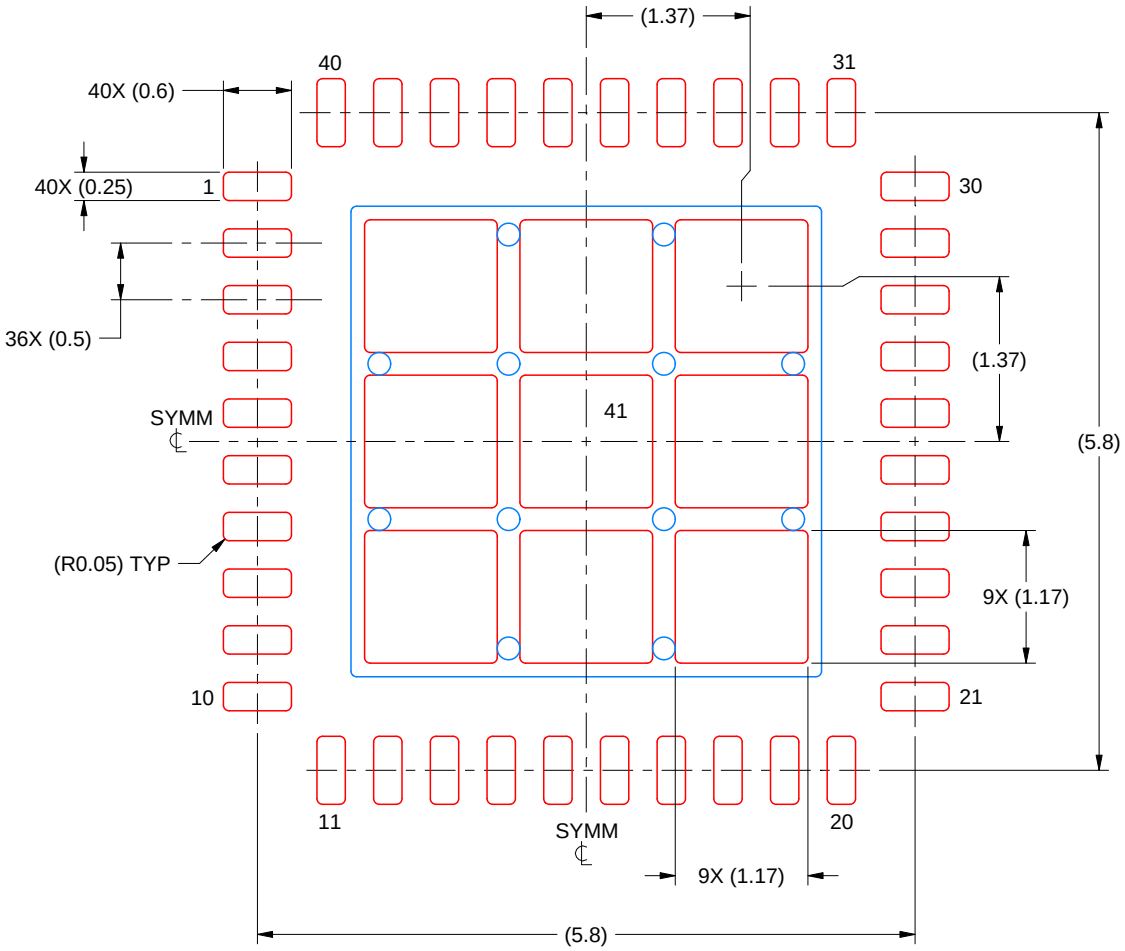

SOLDER PASTE EXAMPLE
BASED ON 0.125 MM THICK STENCIL
SCALE: 15X

EXPOSED PAD 41
72% PRINTED SOLDER COVERAGE BY AREA UNDER PACKAGE

4226110/A 07/2020

NOTES: (continued)

6. Laser cutting apertures with trapezoidal walls and rounded corners may offer better paste release. IPC-7525 may have alternate design recommendations.

IMPORTANT NOTICE AND DISCLAIMER

TI PROVIDES TECHNICAL AND RELIABILITY DATA (INCLUDING DATASHEETS), DESIGN RESOURCES (INCLUDING REFERENCE DESIGNS), APPLICATION OR OTHER DESIGN ADVICE, WEB TOOLS, SAFETY INFORMATION, AND OTHER RESOURCES “AS IS” AND WITH ALL FAULTS, AND DISCLAIMS ALL WARRANTIES, EXPRESS AND IMPLIED, INCLUDING WITHOUT LIMITATION ANY IMPLIED WARRANTIES OF MERCHANTABILITY, FITNESS FOR A PARTICULAR PURPOSE OR NON-INFRINGEMENT OF THIRD PARTY INTELLECTUAL PROPERTY RIGHTS.

These resources are intended for skilled developers designing with TI products. You are solely responsible for (1) selecting the appropriate TI products for your application, (2) designing, validating and testing your application, and (3) ensuring your application meets applicable standards, and any other safety, security, regulatory or other requirements.

These resources are subject to change without notice. TI grants you permission to use these resources only for development of an application that uses the TI products described in the resource. Other reproduction and display of these resources is prohibited. No license is granted to any other TI intellectual property right or to any third party intellectual property right. TI disclaims responsibility for, and you fully indemnify TI and its representatives against any claims, damages, costs, losses, and liabilities arising out of your use of these resources.

TI’s products are provided subject to TI’s Terms of Sale, TI’s General Quality Guidelines, or other applicable terms available either on ti.com or provided in conjunction with such TI products. TI’s provision of these resources does not expand or otherwise alter TI’s applicable warranties or warranty disclaimers for TI products. Unless TI explicitly designates a product as custom or customer-specified, TI products are standard, catalog, general purpose devices.

TI objects to and rejects any additional or different terms you may propose.

Copyright © 2026, Texas Instruments Incorporated

Last updated 10/2025